intel

COMPONENT DATA CATALOG

JANUARY 1982

Intel Corporation makes no warranty for the use of its products and assumes no responsibility for any errors which may appear in this document nor does it make a commitment to update the information contained herein.

The following are trademarks of Intel Corporation and may only be used to identify Intel Products:

BXP, CREDIT, i, ICE, iCS, i_m, iMMX, Insite, Intel, $int_e l$, Intelevision, Intellec, iOSP, iRMX, iSBC, iSBX, Library Manager, MCS, Megachassis, Micromainframe, Micromap, Multimodule, Plug-A-Bubble, PROMPT, RMX/80, System 2000 and UPI.

MDS is an ordering code only and is not used as a product name or trademark. MDS® is a registered trademark of Mohawk Data Sciences Corporation.

*MULTIBUS is a patented Intel bus.

Additional copies of this manual or other Intel literature may be obtained from:

Intel Corporation
Literature Department SV3-3
3065 Bowers Avenue
Santa Clara, CA 95051

© INTEL CORPORATION, 1981

Table of Contents

Alphanumeric Index v

CHAPTER 1
Random Access Memory

2114A, 1024 x 4-Bit Static RAM 1-1
2115A, 2125A Family, High Speed 1K x 1-Bit Static RAM 1-5
2115H, 2125H Family, High Speed 1K x 1-Bit Static RAM 1-10
2118 Family 16,384 x 1-Bit Dynamic RAM 1-15
2128 2K x 8 Static RAM 1-26
2141, 4096 x 1-Bit Static RAM 1-30
2142, 1024 x 4-Bit Static RAM 1-36
2147A, 1K x 4 Static RAM 1-40
2147H High Speed 4096 x 1-Bit Static RAM 1-44
2148H, 1024 x 4-Bit Static RAM 1-48
2149H, 1024 x 4-Bit Static RAM 1-52
2164 Family 65,536 x 1-Bit Dynamic RAM 1-56
2164-25, 65,536 x 1-Bit Dynamic RAM 1-64
2167 High Speed 16,384 x 1-Bit Static RAM 1-72
2186/7, 8192 x 8-Bit Integrated RAM 1-77
8148, 4096 x 8-Bit Integrated RAM 1-76

CHAPTER 2
Read Only Memory and Memory Support

2716, 16K (2K x 8) UV Erasable PROM 2-1
2732A, 32K (4K x 8) UV Erasable PROM 2-9
2764, (8K x 8) UV Erasable PROM 2-16
27128, (16K x 8) UV Erasable PROM 2-22
2815, 16K (2K x 8) Electrically Erasable PROM 2-23
2816, 16K (2K x 8) Electrically Erasable PROM 2-36
2817, 16K (2K x 8) Electrically Erasable PROM 2-49
3628A, 8K (1K x 8) Bipolar PROM 2-50
3632, 32K (4K x 8) Bipolar PROM 2-53
3636B, 16K (2K x 8) Bipolar PROM 2-56
82S181/82HS181, 8K (1K x 8) Bipolar PROM 2-59
82S191/82HS191, 16K (2K x 8) Bipolar PROM 2-62
82S321/82HS321, 32K (4K x 8) Bipolar PROM 2-65
Bipolar PROM Programming 2-68
Bipolar PROM Cross Reference 2-71

CHAPTER 3
Magnetics

BPK70, 1 Mbit Bubble Storage Subsystem 3-1
BPK72 Bubble Storage Prototype Kit 3-3
7110, 1 Megabit Bubble Memory Family 3-5
7220-1 Bubble Memory Controller 3-11
7230 Current Pulse Generator for Bubble Memories 3-26
7242 Dual Formatter/Sense Amplifier for Bubble Memories 3-30
7250 Coil Pre-Driver for Bubble Memories 3-40
7254 Quad VMOS Drive Transistors for Bubble Memories 3-44

CHAPTER 4
Telephony and Signal Processing

2910A PCM Codec—μ Law, 8-Bit Companded A/D and D/A Converter 4-1
2911A PCM Codec—A Law, 8-Bit Companded A/D and D/A Converter 4-16
2912A PCM Transmit/Receive Filter 4-30

2913/2914 Combined Single Chip 4-42
2921 4-60

CHAPTER 5
Automotive

P80A48H/P80A35HL HMOS Single Component 8-Bit Microcomputer 5-1
P80A49H/P80A39HL HMOS Single Component 8-Bit Microcomputer 5-17
P80A48L HMOS Single Component 8-Bit Microcomputer 5-9

CHAPTER 6
MCS-48™ Microprocessors

8020H HMOS Single-Component 8-Bit Microcomputer 6-1
8021 Single Component 8-Bit Microcomputer 6-7
8021H HMOS Single Component 8-Bit Microcomputer 6-8
8022 Single Component 8-Bit Microcomputer with On-Chip A/D Converter 6-17
8022H High Performance Single Component 8-Bit Microcomputer with On-Chip A/D Converter 6-23
8031/8051/8751 Single-Component 8-Bit Microcomputer 6-24
8048H/8048H-1/8035HL/8035HL-1 HMOS Single Component 8-Bit Microcomputer 6-39
80C48/80C35 CHMOS Single-Component 8-Bit Microcomputer 6-46
8748H/8035H HMOS Single-Chip EPROM Microcomputer 6-53
8049H/8049HL HMOS Single-Component 8-Bit Microprocessor 6-62
80C49/80C39 CHMOS Single-Component 8-Bit Microcomputer 6-69
8749H/8749H-8/8739H/8739H-B 6-76
8243 MCS-48 Input/Output Expander 6-85
8050H/8040H HMOS Single Component 8-Bit Microcomputer 6-91

CHAPTER 7
MCS-80/85™ Microprocessors

8080A/8080A-1/8080A-2, 8-Bit N-Channel Microprocessor 7-1
8085AH/8085AH-2 Single Chip 8-Bit HMOS Microprocessors 7-10
8085A/8085A-2 Single Chip 8-Bit N-Channel Microprocessors 7-26
8155H/8156H/8155H-2/8156H-2, 2048 Bit Static HMOS RAM with I/O Ports and Timer 7-30
8155/8156/8155-2/8156-2, 2048 Bit Static MOS RAM with I/O Ports and Timer 7-42
8185/8185-2, 1024 x 8-Bit Static RAM for MCS-85 7-45
8205 High Speed 1 Out of 8 Binary Decoder 7-50
8212 8-Bit Input/Output Port 7-55
8216/8226, 4-Bit Parallel Bidirectional Bus Driver 7-63
8218/8219 Bipolar Microcomputer Bus Controllers for MCS-80 and MCS-85 Families 7-68
8224 Clock Generator and Driver for 8080A CPU 7-79
8228/8238 System Controller and Bus Driver for 8080A CPU 7-84
8237A/8237A-5 High Performance Programmable DMA Controller 7-88
8257/8257-5 Programmable DMA Controller 7-103
8259A/8259A-2/8259A-8 Programmable Interrupt Controller 7-120
8355/8355-2, 16,384-Bit ROM with I/O 7-138
8755A/8755A-2, 16,384-Bit EPROM with I/O 7-146

CHAPTER 8
iAPX 86, 88 Microprocessors

iAPX 86/10 16-Bit HMOS Microprocessor 8-1
iAPX 88/10 8-Bit HMOS Microprocessor 8-25
8089 8/16-Bit HMOS I/O Processor 8-52
iAPX 86/20, 88/20, 8-Bit HMOS Numeric Data Processor 8-66
iAPX 86/30, iAPX 88/30 Operating System Processors 8-86
8282/8283 Octal Latch 8-108
8284A Clock Generator and Driver for iAPX 86/10, iAPX 88/10 8089 Processors 8-113

8286/8287 Octal Bus Transceiver 8-121
8288 Bus Controller for iAPX 86/10, iAPX 88/10 8089 Processors 8-126
8289 Bus Arbiter 8-133

CHAPTER 9
Microprocessor Peripherals

Slave Processors
8041AH/8041AH-2/8641A/8741A Universal Peripheral Interface 8-Bit Microcomputer 9-1
8042/8742 Universal Peripheral Interface 8-Bit Microcomputer 9-14
8231A Arithmetic Processing Unit 9-27
8232 Floating Point Processing Unit 9-37
8294 Data Encryption Unit 9-49
8295 Dot Matrix Printer Controller 9-60

Memory Controllers
8202A Dynamic RAM Controller 9-69
8203 64K Dynamic RAM Controller 9-83
8206 Error Detection and Correction Unit 9-98
8271/8271-6 Programmable Floppy Disk Controller 9-117
8272 Single/Double Density Floppy Disk Controller 9-146

Data Communications
8251A Programmable Communications Interface 9-165
8256 Multifunction Universal Asynchronous Receiver-Transmitter (MUART) 9-182
8273, 8273-4, 8273-8 Programmable HDLC/SDLC Protocol Controller 9-191
8274 Multi-Protocol Serial Controller 9-216
8291A GPIB Talker/Listener 9-251
8292 GPIB Controller 9-280
8293 GPIB Transceiver 9-295

Controllers
8253/8253-5 Programmable Interval Timer 9-307
8254 Programmable Interval Timer 9-318
8255A/8255A-5 Programmable Peripheral Interface 9-333
8275 Programmable CRT Controller 9-354
8276 Small System CRT Controller 9-378
8279/8279-5 Programmable Keyboard/Display Interface 9-395

CHAPTER 10
iAPX 432 MICROMAINFRAME™

iAPX 43201/43202/43203 VLSI Micromainframe System 10-1
iAPX 43201, 43202 VLSI General Data Processor 10-3
iAPX 43203 VLSI Interface Processor 10-34

CHAPTER 11
Industrial Grade Products

I2114A, 1024 x 4-Bit Static RAM 11-1
I2118 Family 16,384 x 1-Bit Dynamic RAM 11-4
I2716 Industrial Grade 16K (2K x 8) UV Erasable PROM 11-9
I8022 Single Component 8-Bit Microcomputer with On-Chip A/D Converter 11-13
I8031/8051 Single Component 8-Bit Microcomputer 11-16
I8048H New High Performance HMOS Single Component 8-Bit Microcomputer 11-17
I8049H/8039H New High Performance Single Component 8-Bit Microcomputer 11-20
I8085AH Single Chip 8-Bit N-Channel Microprocessor 11-23
Industrial iAPX 86/10 16-Bit HMOS Microprocessor 11-27
I8155/6H, 2048 Bit Static MOS RAM with I/O Ports and Timer 11-37
I8185, 1024 x 8-Bit Static RAM for MCS-85 11-40
I8212, 8-Bit Input/Output Port 11-45
I8216/8226, 4-Bit Parallel Bidirectional Bus Driver 11-48

I8259A Programmable Interrupt Controller 11-51
I8282/8283 Octal Latch 11-57
I8284 Clock Generator and Driver for iAPX 86, 88 Processors 11-61
I8286/8287 Octal Bus Transceiver 11-65
I8288 Bus Controller for iAPX 86, 88 Processors 11-70
I8289 Bus Arbiter 11-75
I8355, 16,384-Bit ROM with I/O 11-79
I8755A, 16,384-Bit EPROM with I/O 11-82

CHAPTER 12
Military Grade Products

Introduction 12-1
M2114A, 1024 x 4-Bit Static RAM 12-4
M2118 Family 16,384 x 1-Bit Dynamic RAM 12-8
M2147H High Speed 4096 x 1-Bit Static RAM 12-13
M2148H High Speed 1024 x 4-Bit Static RAM 12-17
M2167 12-21
M2716/M2716M, 16K (2K x 8) UV Erasable PROM 12-25
M2732, 32K (4K x 8) UV Erasable PROM 12-28
M2764 12-29
M2816, 16K (2K x 8) Electrically Erasable PROM 12-33
M3632 12-38
M3636, 16K (2K x 8) Bipolar PROM 12-39
M8048/M8748/M8035L Single Component 8-Bit Microcomputer 12-42
M8080A, 8-Bit N-Channel Microprocessor 12-48
M8085AH Single Chip 8-Bit N-Channel Microprocessor 12-53
Military iAPX 86/10, 16-Bit HMOS Microprocessor 12-58
M8155H, 2048-Bit Static MOS RAM with I/O Ports and Timer 12-67
M8185, 1024 x 8-Bit Static RAM for MCS-85 12-70
M8212, 8-Bit Input/Output Port 12-72
M8214 Priority Interrupt Control Unit 12-76
M8216/M8226, 4-Bit Parallel Bidirectional Bus Driver 12-79
M8224 Clock Generator and Driver for 8080A CPU 12-82
M8228 System Controller and Bus Driver for M8080A CPU 12-87
M8231A Arithmetic Processing Unit 12-92
M8243 MCS-48 Input/Output Expander 12-95
M8251A Programmable Communication Interface 12-98
M8253 Programmable Interval Timer 12-102
M8255A Programmable Peripheral Interface 12-106
M8257 Programmable DMA Controller 12-112
M8259A Programmable Interrupt Controller 12-116
M8282/8283 Octal Latch 12-119
M8284 Clock Generator and Driver for Military iAPX 86 12-122
M8286/8287 Octal Bus Transceiver 12-125
M8288 Bus Controller for Military iAPX 86 12-128
M8289 Bus Arbiter 12-133
M8741A Universal Peripheral Interface 8-Bit Microcomputer 12-136
M8755A, 16,384-Bit EPROM with I/O 12-140

CHAPTER 13
Quality Assurance 13-1

CHAPTER 14
General Information

Ordering Information 14-1
Packaging Information 14-2
Microcomputer Workshops 14-11
Product Service 14-14

Alphanumeric Index

2114A, 1024 x 4-Bit Static RAM 1-1
I2114A, 1024 x 4-Bit Static RAM 11-1
M2114A, 1024 x 4-Bit Static RAM 12-4
2115A, 2125A Family, High Speed 1K x 1-Bit Static RAM 1-5
2115H, 2125H Family, High Speed 1K x 1-Bit Static RAM 1-10
2118 Family 16,384 x 1-Bit Dynamic RAM 1-15
I2118 Family 16,384 x 1-Bit Dynamic RAM 11-4
M2118 Family 16,384 x 1-Bit Dynamic RAM 12-8
2128 2K x 8 Static RAM 1-26
2141, 4096 x 1-Bit Static RAM 1-30
2142, 1024 x 4-Bit Static RAM 1-36
2147A, 1K x 4 Static RAM 1-40
2147H High Speed 4096 x 1-Bit Static RAM 1-44
M2147H High Speed 4096 x 1-Bit Static RAM 12-13
2148H, 1024 x 4-Bit Static RAM 1-48
M2148H High Speed 1024 x 4-Bit Static RAM 12-17
2149H, 1024 x 4-Bit Static RAM 1-52
2164 Family 65,536 x 1-Bit Dynamic RAM 1-56
2164-25, 65,536 x 1-Bit Dynamic RAM 1-64
2167 High Speed 16,384 x 1-Bit Static RAM 1-72
M2167 12-21
2186/7, 8192 x 8-Bit Integrated RAM 1-77
27128, (16K x 8) UV Erasable PROM 2-22
2716, 16K (2K x 8) UV Erasable PROM 2-1
I2716 Industrial Grade 16K (2K x 8) UV Erasable PROM 11-9
M2716/M2716M, 16K (2K x 8) UV Erasable PROM 12-25
2732A, 32K (4K x 8) UV Erasable PROM 2-9
M2732, 32K (4K x 8) UV Erasable PROM 12-28
2764, (8K x 8) UV Erasable PROM 2-16
M2764 12-29
2815, 16K (2K x 8) Electrically Erasable PROM 2-23
2816, 16K (2K x 8) Electrically Erasable PROM 2-36
M2816, 16K (2K x 8) Electrically Erasable PROM 12-33
2817, 16K (2K x 8) Electrically Erasable PROM 2-49
2910A PCM Codec — μ Law, 8-Bit Companded A/D and D/A Converter 4-1
2911A PCM Codec — A Law, 8-Bit Companded A/D and D/A Converter 4-16
2912A PCM Transmit/Receive Filter 4-30
2913/2914 Combined Single Chip 4-42
2921 4-60
3628A, 8K (1K x 8) Bipolar PROM 2-50
3632, 32K (4K x 8) Bipolar PROM 2-53
M3632 12-38
3636B, 16K (2K x 8) Bipolar PROM 2-56
M3636, 16K (2K x 8) Bipolar PROM 12-39
iAPX 43201/43202/43203 VLSI Micromainframe System 10-1
iAPX 43201, 43202 VLSI General Data Processor 10-3
iAPX 43203 VLSI Interface Processor 10-34
7110, 1 Megabit Bubble Memory Family 3-5
7220-1 Bubble Memory Controller 3-11
7230 Current Pulse Generator for Bubble Memories 3-26
7242 Dual Formatter/Sense Amplifier for Bubble Memories 3-30
7250 Coil Pre-Driver for Bubble Memories 3-40
7254 Quad VMOS Drive Transistors for Bubble Memories 3-44
8020H HMOS Single-Component 8-Bit Microcomputer 6-1
8021 Single Component 8-Bit Microcomputer 6-7

8021H HMOS Single-Component 8-Bit Microcomputer 6-8
8022 Single Component 8-Bit Microcomputer with On-Chip A/D Converter 6-17
8022H High Performance Single Component 8-Bit Microcomputer with On-Chip A/D Converter 6-23
I8022 Single Component 8-Bit Microcomputer with On-Chip A/D Converter 11-13
8031/8051/8751 Single Component 8-Bit Microcomputer 6-24
I8031/8051 Single Component 8-Bit Microcomputer 11-16
8041AH/8041AH-2/8641A/8741A Universal Peripheral Interface 8-Bit Microcomputer 9-1
8042/8742 Universal Peripheral Interface 8-Bit Microcomputer 9-14
80C48/80C35 CHMOS Single-Component 8-Bit Microcomputer 6-46
8048H/8048H-1/8035HL/8035HL-1 HMOS Single Component 8-Bit Microcomputer 6-39
I8048H New High Performance HMOS Single Component 8-Bit Microcomputer 11-17
M8048/M8748/M8035L Single Component 8-Bit Microcomputer 12-42
P80A48H/P80A35HL HMOS Single Component 8-Bit Microcomputer 5-1
P80A48L HMOS Single Component 8-Bit Microcomputer 5-17
80C49/80C39 CHMOS Single-Component 8-Bit Microcomputer 6-69
8049H/8049HL HMOS Single Component 8-Bit Microprocessor 6-62
I8049H/8039H New High Performance Single Component 8-Bit Microcomputer 11-20
P80A49H/P80A39HL HMOS Single Component 8-Bit Microcomputer 5-9
8050H/8040H HMOS Single Component 8-Bit Microcomputer 6-91
8080A/8080A-1/8080A-2, 8-Bit N-Channel Microprocesser 7-1
M8080A, 8-Bit N-Channel Microprocessor 12-48
8085A/8085A-2 Single Chip 8-Bit N-Channel Microprocessors 7-26
8085AH/8085AH-2 Single Chip 8-Bit HMOS Microprocessors 7-10
I8085AH Single Chip 8-Bit N-Channel Microprocessor 11-23
M8085AH Single Chip 8-Bit N-Channel Microprocessor 12-53
iAPX 86/10 16-Bit HMOS Microprocessor 8-1
Industrial iAPX 86/10 16-Bit HMOS Microprocessor 11-27
iAPX 86/20, 88/20 8-Bit HMOS Numeric Data Processor 8-66
iAPX 86/30, iAPX 88/30 Operating System Processors 8-86
iAPX 88/10 8-Bit HMOS Microprocessor 8-25
8089 8/16-Bit HMOS I/O Processor 8-52
8148, 4096 x 8-Bit Integrated RAM 1-76
8155/8156/8155-2/8156-2, 2048 Bit Static MOS RAM with I/O Ports and Timer 7-42
8155H/8156H/8155H-2/8156H-2, 2048 Bit Static HMOS RAM with I/O Ports and Timer 7-30
I8155/6H, 2048 Bit Static MOS RAM with I/O Ports and Timer 11-37
M8155H, 2048-Bit Static MOS RAM with I/O Ports and Timer 12-67
8185/8185-2, 1024 x 8-Bit Static RAM for MCS-85 7-45
I8185, 1024 x 8-Bit Static RAM for MCS-85 11-40
M8185, 1024 x 8-Bit Static RAM for MCS-85 12-70
8202A Dynamic RAM Controller 9-69
8203 64K Dynamic RAM Controller 9-83
8205 High Speed 1 Out of 8 Binary Decoder 7-50
8206 Error Detection and Correction Unit 9-98
8212 8-Bit Input/Output Port 7-55
I8212, 8-Bit Input/Output Port 11-45
M8212, 8-Bit Input/Output Port 12-72
M8214 Priority Interrupt Control Unit 12-76
8216/8226, 4-Bit Parallel Bidirectional Bus Driver 7-63
I8216/8226, 4-Bit Parallel Bidirectional Bus Driver 11-48
82S181/82HS181, 8K (1K x 8) Bipolar PROM 2-59
82S191/82HS191, 16K (2K x 8) Bipolar PROM 2-62
82S321/82HS321, 32K (4K x 8) Bipolar PROM 2-65
M8216/M8226, 4-Bit Parallel Bidirectional Bus Driver 12-79
8218/8219 Bipolar Microcomputer Bus Controllers for MCS-80 and MCS-85 Families 7-68
8224 Clock Generator and Driver for 8080A CPU 7-79
M8224 Clock Generator and Driver for 8080A CPU 12-82
8228/8238 System Controller and Bus Driver for 8080A CPU 7-84
M8228 System Controller and Bus Driver for M8080A CPU 12-87

8231A Arithmetic Processing Unit 9-27
M8231A Arithmetic Processing Unit 12-92
8232 Floating Point Processing Unit 9-37
8237A/8237A-5 High Performance Programmable DMA Controller 7-88
8243 MCS-48 Input/Output Expander 6-85
M8243 MCS-48 Input/Output Expander 12-95
8251A Programmable Communication Interface 9-165
M8251A Programmable Communication Interface 12-98
8253/8253-5 Programmable Interval Timer 9-307
M8253 Programmable Interval Timer 12-102
8254 Programmable Interval Timer 9-318
8255A/8255A-5 Programmable Peripheral Interface 9-333
M8255A Programmable Peripheral Interface 12-106
8256 Multifunction Universal Asynchronous Receiver-Transmitter (MUART) 9-182
8257/8257-5 Programmable DMA Controller 7-103
M8257 Programmable DMA Controller 12-112
8259A/8259A-2/8259A-8 Programmable Interrupt Controller 7-120
I8259A Programmable Interrupt Controller 11-51
M8259A Programmable Interrupt Controller 12-116
8271/8271-6 Programmable Floppy Disk Controller 9-117
8272 Single/Double Density Floppy Disk Controller 9-146
8273, 8273-4, 8273-8 Programmable HDLC/SDLC Protocol Controller 9-191
8274 Multi-Protocol Serial Controller 9-216
8275 Programmable CRT Controller 9-354
8276 Small System CRT Controller 9-378
8279/8279-5 Programmable Keyboard/Display Interface 9-395
8282/8283 Octal Latch 8-108
I8282/8283 Octal Latch 11-57
M8282/8283 Octal Latch 12-119
8284A Clock Generator and Driver for iAPX 86/10, iAPX 88/10 8089 Processors 8-113
I8284 Clock Generator and Driver for iAPX 86, 88 Processors 11-61
M8284 Clock Generator and Driver for Military iAPX 86 12-122
8286/8287 Octal Bus Transceiver 8-121
I8286/8287 Octal Bus Transceiver 11-65
M8286/8287 Octal Bus Transceiver 12-125
8288 Bus Controller for iAPX 86/10, iAPX 88/10 8089 Processors 8-126
I8288 Bus Controller for iAPX 86, 88 Processors 11-70
M8288 Bus Controller for Military iAPX 86 12-128
8289 Bus Arbiter 8-133
I8289 Bus Arbiter 11-75
M8289 Bus Arbiter 12-133
8291A GPIB Talker/Listener 9-251
8292 GPIB Controller 9-280
8293 GPIB Transceiver 9-295
8294 Data Encryption Unit 9-49
8295 Dot Matrix Printer Controller 9-60
8355/8355-2, 16,384-Bit ROM with I/O 7-138
I8355, 16,384-Bit ROM with I/O 11-79
M8741A Universal Peripheral Interface 8-Bit Microcomputer 12-136
8748H/8035H HMOS Single-Chip EPROM Microcomputer 6-53
8749H/8749H-8/8739H/8739H-B 6-76
8755A/8755A-2, 16,384-Bit EPROM with I/O 7-146
I8755A, 16,384-Bit EPROM with I/O 11-82
M8755A, 16,384-Bit EPROM with I/O 12-140
Bipolar PROM Cross Reference 2-71
Bipolar PROM Programming 2-68
BPK70, 1 Mbit Bubble Storage Subsystem 3-1
BPK72 Bubble Storage Prototype Kit 3-3

Random Access Memory

1

2114A
1024 X 4 BIT STATIC RAM

	2114AL-1	2114AL-2	2114AL-3	2114AL-4	2114A-4	2114A-5
Max. Access Time (ns)	100	120	150	200	200	250
Max. Current (mA)	40	40	40	40	70	70

- **HMOS Technology**
- **Low Power, High Speed**
- **Identical Cycle and Access Times**
- **Single +5V Supply ±10%**
- **High Density 18 Pin Package**
- **Completely Static Memory - No Clock or Timing Strobe Required**
- **Directly TTL Compatible: All Inputs and Outputs**
- **Common Data Input and Output Using Three-State Outputs**
- **2114 Upgrade**

The Intel® 2114A is a 4096-bit static Random Access Memory organized as 1024 words by 4-bits using HMOS, a high performance MOS technology. It uses fully DC stable (static) circuitry throughout, in both the array and the decoding, therefore it requires no clocks or refreshing to operate. Data access is particularly simple since address setup times are not required. The data is read out nondestructively and has the same polarity as the input data. Common input/output pins are provided.

The 2114A is designed for memory applications where the high performance and high reliability of HMOS, low cost, large bit storage, and simple interfacing are important design objectives. The 2114A is placed in an 18-pin package for the highest possible density.

It is directly TTL compatible in all respects: inputs, outputs, and a single +5V supply. A separate Chip Select ($\overline{CS}$) lead allows easy selection of an individual package when outputs are or-tied.

PIN CONFIGURATION

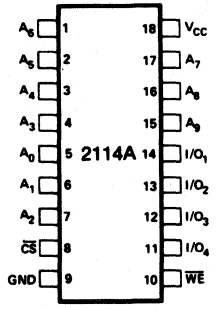

LOGIC SYMBOL

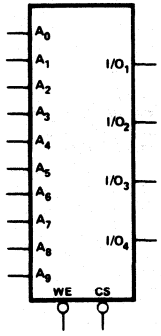

BLOCK DIAGRAM

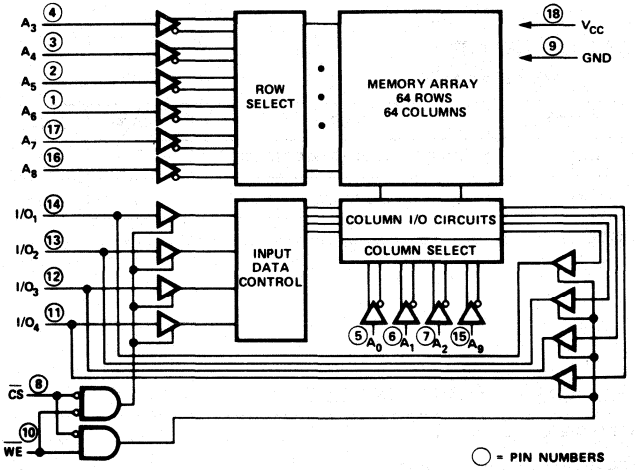

PIN NAMES

A_0–A_9	ADDRESS INPUTS	V_{CC}	POWER (+5V)
$\overline{WE}$	WRITE ENABLE	GND	GROUND
$\overline{CS}$	CHIP SELECT		
I/O_1–I/O_4	DATA INPUT/OUTPUT		

INTEL CORPORATION ASSUMES NO RESPONSIBILITY FOR THE USE OF ANY CIRCUITRY OTHER THAN CIRCUITRY EMBODIED IN AN INTEL PRODUCT. NO OTHER CIRCUIT PATENT LICENSES ARE IMPLIED.
©INTEL CORPORATION, 1977, 1979

ABSOLUTE MAXIMUM RATINGS*

Temperature Under Bias ..... -10°C to 80°C
Storage Temperature ..... -65°C to 150°C
Voltage on any Pin
With Respect to Ground ..... -3.5V to +7V
Power Dissipation 1.0W
D.C. Output Current 5mA

*COMMENT: Stresses above those listed under "Absolute Maximum Ratings" may cause permanent damage to the device. This is a stress rating only and functional operation of the device at these or any other conditions above those indicated in the operational sections of this specification is not implied. Exposure is not implied. Exposure to absolute maximum rating conditions for extended periods may affect device reliability.

D.C. AND OPERATING CHARACTERISTICS

T_A = 0°C to 70°C, V_{CC} = 5V ± 10%, unless otherwise noted.

SYMBOL	PARAMETER	2114AL-1/L-2/L-3/L-4 Min.	Typ.[1]	Max.	2114A-4/-5 Min.	Typ.[1]	Max.	UNIT	CONDITIONS
$\|I_{LI}\|$	Input Load Current (All Input Pins)			10			10	µA	V_{IN} = 0 to 5.5V
$\|I_{LO}\|$	I/O Leakage Current			10			10	µA	$\overline{CS}$ = V_{IH} $V_{I/O}$ = GND to VCC
I_{CC}	Power Supply Current		25	40		50	70	mA	V_{CC} = max, $I_{I/O}$ = 0 mA, T_A = 0°C
V_{IL}	Input Low Voltage	-3.0		0.8	-3.0		0.8	V	
V_{IH}	Input High Voltage	2.0		6.0	2.0		6.0	V	
I_{OL}	Output Low Current	2.1	9.0		2.1	9.0		mA	V_{OL} = 0.4V
I_{OH}	Output High Current	-1.0	-2.5		-1.0	-2.5		mA	V_{OH} = 2.4V
I_{OS}[2]	Output Short Circuit Current			40			40	mA	

NOTE: 1. Typical values are for T_A = 25°C and V_{CC} = 5.0V.
2. Duration not to exceed 30 seconds.

CAPACITANCE

T_A = 25°C, f = 1.0 MHz

SYMBOL	TEST	MAX	UNIT	CONDITIONS
$C_{I/O}$	Input/Output Capacitance	5	pF	$V_{I/O}$ = OV
C_{IN}	Input Capacitance	5	pF	V_{IN} = OV

NOTE: This parameter is periodically sampled and not 100% tested.

A.C. CONDITIONS OF TEST

Input Pulse Levels ..... 0.8 Volt to 2.0 Volt
Input Rise and Fall Times ..... 10 nsec
Input and Output Timing Levels .....1.5 Volts
Output Load ..... 1 TTL Gate and C_L = 100 pF

A.C. CHARACTERISTICS T_A = 0°C to 70°C, V_{CC} = 5V ± 10%, unless otherwise noted.

READ CYCLE [1]

SYMBOL	PARAMETER	2114AL-1 Min.	2114AL-1 Max.	2114AL-2 Min.	2114AL-2 Max.	2114AL-3 Min.	2114AL-3 Max.	2114A-4/L-4 Min.	2114A-4/L-4 Max.	2114A-5 Min.	2114A-5 Max.	UNIT
t_{RC}	Read Cycle Time	100		120		150		200		250		ns
t_A	Access Time		100		120		150		200		250	ns
t_{CO}	Chip Selection to Output Valid		70		70		70		70		85	ns
t_{CX}	Chip Selection to Output Active	10		10		10		10		10		ns
t_{OTD}	Output 3-state from Deselection		30		35		40		50		60	ns
t_{OHA}	Output Hold from Address Change	15		15		15		15		15		ns

WRITE CYCLE [2]

SYMBOL	PARAMETER	2114AL-1 Min.	2114AL-1 Max.	2114AL-2 Min.	2114AL-2 Max.	2114AL-3 Min.	2114AL-3 Max.	2114A-4/L-4 Min.	2114A-4/L-4 Max.	2114A-5 Min.	2114A-5 Max.	UNIT
t_{WC}	Write Cycle Time	100		120		150		200		250		ns
t_W	Write Time	75		75		90		120		135		ns
t_{WR}	Write Release Time	0		0		0		0		0		ns
t_{OTW}	Output 3-state from Write		30		35		40		50		60	ns
t_{DW}	Data to Write Time Overlap	70		70		90		120		135		ns
t_{DH}	Data Hold from Write Time	0		0		0		0		0		ns

NOTES:
1. A Read occurs during the overlap of a low $\overline{CS}$ and a high $\overline{WE}$.
2. A Write occurs during the overlap of a low $\overline{CS}$ and a low $\overline{WE}$. t_W is measured from the latter of $\overline{CS}$ or $\overline{WE}$ going low to the earlier of $\overline{CS}$ or $\overline{WE}$ going high.

WAVEFORMS

READ CYCLE ③

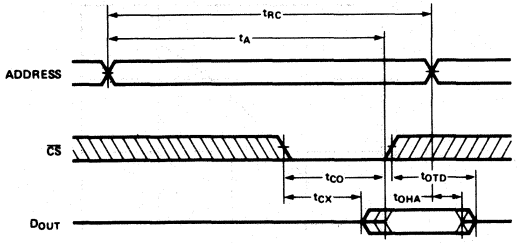

NOTES:
3. $\overline{WE}$ is high for a Read Cycle.
4. If the $\overline{CS}$ low transition occurs simultaneously with the $\overline{WE}$ low transition, the output buffers remain in a high impedance state.
5. $\overline{WE}$ must be high during all address transitions.

WRITE CYCLE

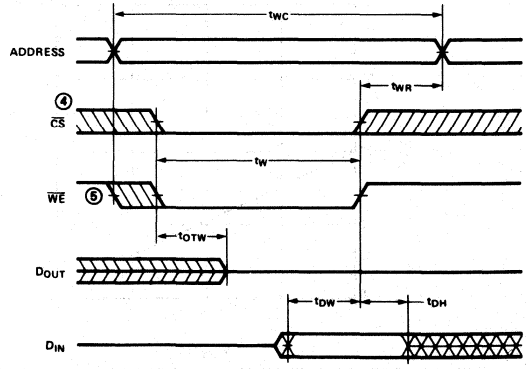

TYPICAL D.C. AND A.C. CHARACTERISTICS

NORMALIZED ACCESS TIME VS. SUPPLY VOLTAGE

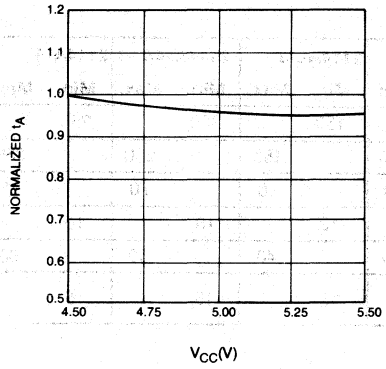

NORMALIZED ACCESS TIME VS. AMBIENT TEMPERATURE

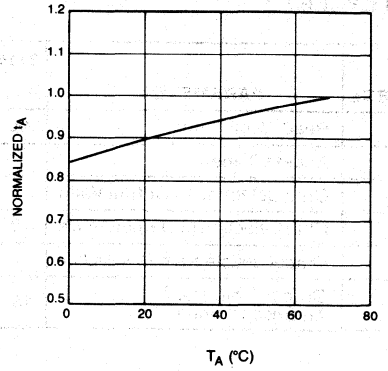

NORMALIZED ACCESS TIME VS. OUTPUT LOAD CAPACITANCE

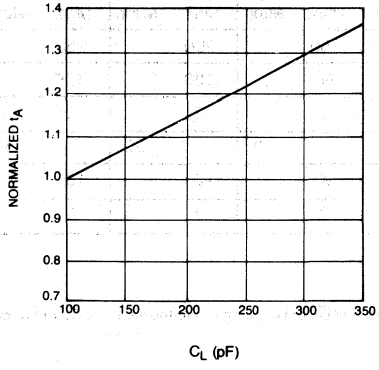

NORMALIZED POWER SUPPLY CURRENT VS. AMBIENT TEMPERATURE

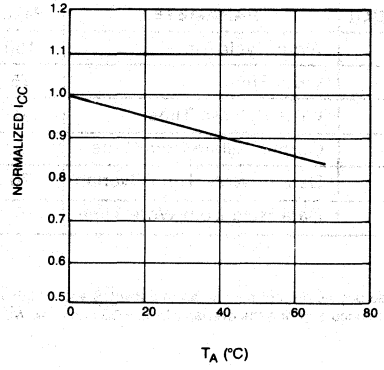

OUTPUT SOURCE CURRENT VS. OUTPUT VOLTAGE

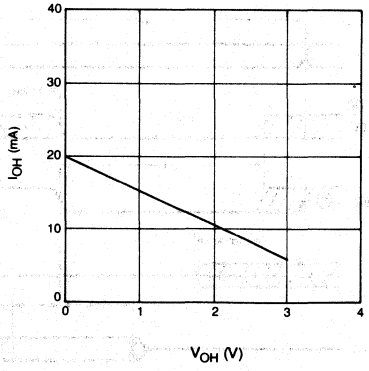

OUTPUT SINK CURRENT VS. OUTPUT VOLTAGE

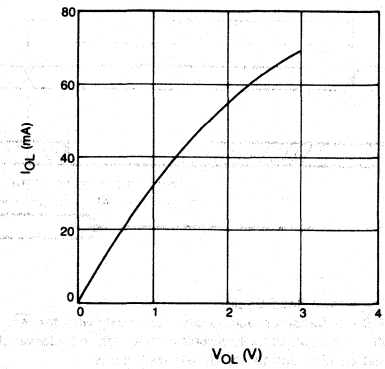

2115A, 2125A FAMILY
HIGH SPEED 1K X 1 BIT STATIC RAM

	2115AL, 2125AL	2115A, 2125A	2115AL-2, 2125AL-2	2115A-2, 2125A-2
Max. T_{AA} (ns)	45	45	70	70
Max. I_{CC} (mA)	75	125	75	125

- **Pin Compatible To 93415A (2115A) And 93425A (2125A)**
- **Fan-Out Of 10 TTL (2115A Family) -- 16mA Output Sink Current**
- **Low Operating Power Dissipation --Max. 0.39mW/Bit (2115AL, 2125AL)**
- **TTL Inputs And Outputs**
- **Single +5V Supply**
- **Uncommitted Collector (2115A) And Three-State (2125A) Output**
- **Standard 16-Pin Dual In-Line Package**

The Intel® 2115A and 2125A families are high-speed, 1024 words by 1 bit random access memories. Both open collector (2115A) and three-state output (2125A) are available. The 2115A and 2125A use fully DC stable (static) circuitry throughout – in both the array and the decoding and, therefore, require no clocks or refreshing to operate. The data is read out non-destructively and has the same polarity as the input data.

The 2115AL/2125AL at 45 ns maximum access time and the 2115AL-2/2125AL-2 at 70 ns maximum access time are fully compatible with the industry-produced 1K bipolar RAMs, yet offer a 50% reduction in power of their bipolar equivalents. The power dissipation of the 2115AL/2125AL and 2115AL-2/2125AL-2 is 394 mW maximum as compared to 814 mW maximum of their bipolar equivalents. For systems already designed for 1K bipolar RAMs, the 2115A/2125A and the 2115A-2/2125A-2 at 45 ns and 70 ns maximum access times, respectively, offer complete compatibility with a 20% reduction in maximum power dissipation.

The devices are directly TTL compatible in all respects: inputs, outputs, and a single +5V supply. A separate select ($\overline{CS}$) lead allows easy selection of an individual package when outputs are OR-tied.

The 2115A and 2125A families are fabricated with Intel's N-channel MOS Silicon Gate Technology.

PIN CONFIGURATION

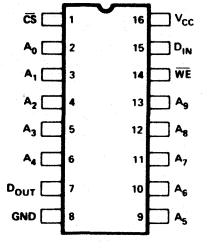

LOGIC SYMBOL

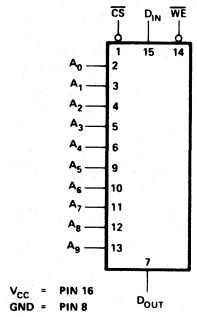

BLOCK DIAGRAM

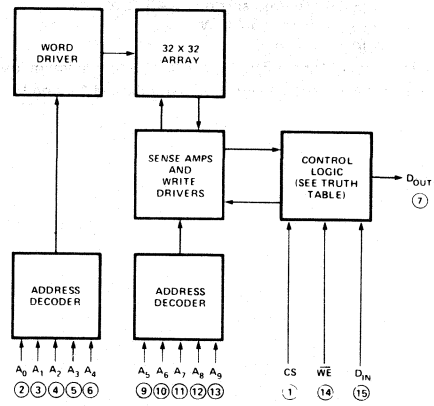

PIN NAMES

$\overline{CS}$	CHIP SELECT
A_0 TO A_9	ADDRESS INPUTS
$\overline{WE}$	WRITE ENABLE
D_{IN}	DATA INPUT
D_{OUT}	DATA OUTPUT

TRUTH TABLE

INPUTS	OUTPUT 2115A FAMILY	OUTPUT 2125A FAMILY	MODE
$\overline{CS}$ $\overline{WE}$ D_{IN}	D_{OUT}	D_{OUT}	
H X X	H	HIGH Z	NOT SELECTED
L L L	H	HIGH Z	WRITE "0"
L L H	H	HIGH Z	WRITE "1"
L H X	D_{OUT}	D_{OUT}	READ

ABSOLUTE MAXIMUM RATINGS*

Temperature Under Bias . . . . . –10°C to +85°C
Storage Temperature . . . . . –65°C to +150°C
All Output or Supply Voltages . . . . . –0.5V to +7V
All Input Voltages . . . . . –0.5V to +5.5V
D.C. Output Current . . . . . 20 mA

*COMMENT: Stresses above those listed under "Absolute Maximum Ratings" may cause permanent damage to the device. This is a stress rating only and functional operation of the device at these or at any other conditions above those indicated in the operational sections of this specification is not implied. Exposure to absolute maximum rating conditions for extended periods may affect device reliability.

D.C. CHARACTERISTICS[1,2]

V_{CC} = 5V ±5%, T_A = 0°C to 75°C

Symbol	Test	Min.	Typ.	Max.	Unit	Conditions
V_{OL1}	2115A Family Output Low Voltage			0.45	V	I_{OL} = 16 mA
V_{OL2}	2125A Family Output Low Voltage			0.45	V	I_{OL} = 7 mA
V_{IH}	Input High Voltage	2.1			V	
V_{IL}	Input Low Voltage			0.8	V	
I_{IL}	Input Low Current		–0.1	–40	μA	V_{CC} = Max., V_{IN} = 0.4V
I_{IH}	Input High Current		0.1	40	μA	V_{CC} = Max., V_{IN} = 4.5V
$\|I_{CEX}\|$	2115A Family Output Leakage Current		0.1	100	μA	V_{CC} = Max., V_{OUT} = 4.5V
$\|I_{OFF}\|$	2125A Family Output Current (High Z)		0.1	50	μA	V_{CC} = Max., V_{OUT} = 0.5V/2.4V
I_{OS}[3]	2125A Family Current Short Circuit to Ground			–100	mA	V_{CC} = Max.
V_{OH}	Family Output High Voltage	2.4			V	I_{OH} = –3.2 mA
I_{CC}	Power Supply Current: I_{CC1}: 2115AL, 2115AL-2, 2125AL, 2125AL-2		60	75	mA	All Inputs Grounded, Output Open
	I_{CC2}: 2115A, 2115A-2, 2125A, 2125A-2		100	125	mA	

NOTES:

1. The operating ambient temperature ranges are guaranteed with transverse air flow exceeding 400 linear feet per minute and a two minute warm-up. Typical thermal resistance values of the package at maximum temperature are:

   θ_{JA} (@ 400 f_{PM} air flow) = 45°C/W
   θ_{JA} (still air) = 60°C/W
   θ_{JC} = 25°C/W

2. Typical limits are at V_{CC} = 5V, T_A = +25°C, and maximum loading.
3. Duration of short circuit current should not exceed 1 second.

2115A FAMILY A.C. CHARACTERISTICS[1,2] V_{CC} = 5V ±5%, T_A = 0°C to 75°C

READ CYCLE

Symbol	Test	2115AL Limits Min.	Typ.	Max.	2115A Limits Min.	Typ.	Max.	2115AL-2 Limits Min.	Typ.	Max.	2115A-2 Limits Min.	Typ.	Max.	Units
t_{ACS}	Chip Select Time	5	15	30	5	15	30	5	15	30	5	15	40	ns
t_{RCS}	Chip Select Recovery Time		10	30		10	30		10	30		10	40	ns
t_{AA}	**Address Access Time**		**30**	**45**		**30**	**45**		**40**	**70**		**40**	**70**	**ns**
t_{OH}	Previous Read Data Valid After Change of Address	10			10			10			10			ns

WRITE CYCLE

Symbol	Test	Min.	Typ.	Max.	Min.	Typ.	Max.	Min.	Typ.	Max.	Min.	Typ.	Max.	Units
t_{WS}	Write Enable Time		10	25		10	30		10	25		10	40	
t_{WR}	Write Recovery Time	0		25	0		30	0		25	0		45	ns
t_W	Write Pulse Width	30	20		30	10		30	15		50	15		ns
t_{WSD}	Data Set-Up Time Prior to Write	0	-5		5	-5		0	-5		5	-5		ns
t_{WHD}	Data Hold Time After Write	5	0		5	0		5	0		5	0		ns
t_{WSA}	Address Set-Up Time	5	0		5	0		5	0		15	0		ns
t_{WHA}	Address Hold Time	5	0		5	0		5	0		5	0		ns
t_{WSCS}	Chip Select Set-Up Time	5	0		5	0		5	0		5	0		ns
t_{WHCS}	Chip Select Hold Time	5	0		5	0		5	0		5	0		ns

A.C. TEST CONDITIONS

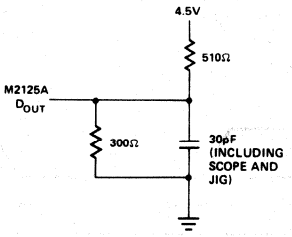

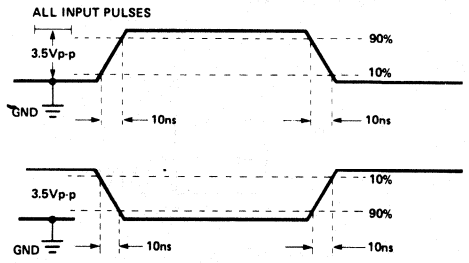

READ CYCLE

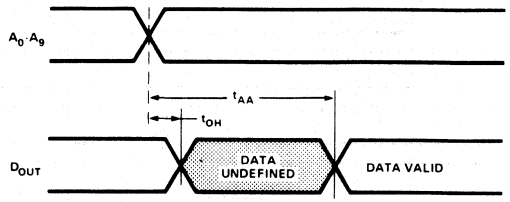

PROPAGATION DELAY FROM CHIP SELECT

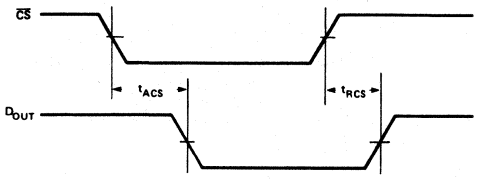

WRITE CYCLE

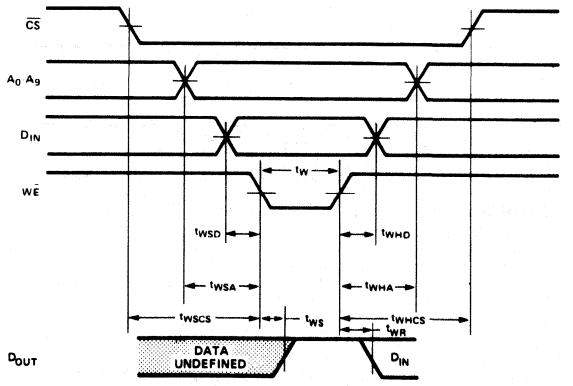

(ALL ABOVE MEASUREMENTS REFERENCED TO 1.5V)

2125 FAMILY A.C. CHARACTERISTICS[1,2] V_{CC} = 5V ±5%, T_A = 0°C to 75°C

READ CYCLE

Symbol	Test	2125AL Limits Min.	Typ.	Max.	2125A Limits Min.	Typ.	Max.	2125AL-2 Limits Min.	Typ.	Max.	2125A-2 Limits Min.	Typ.	Max.	Units
t_{ACS}	Chip Select Time	5	15	30	5	15	30	5	15	30	5	15	40	ns
t_{ZRCS}	Chip Select to HIGH Z		10	30		10	30		10	30		10	40	ns
t_{AA}	**Address Access Time**		**30**	**45**		**30**	**45**		**40**	**70**		**40**	**70**	**ns**
t_{OH}	Previous Read Data Valid After Change of Address	10			10			10			10			ns

WRITE CYCLE

Symbol	Test	Min.	Typ.	Max.	Min.	Typ.	Max.	Min.	Typ.	Max.	Min.	Typ.	Max.	Units
t_{ZWS}	Write Enable to HIGH Z		10	25		10	30		10	25		10	40	ns
t_{WR}	Write Recovery Time	0		25	0		30	0		25	0		45	ns
t_W	Write Pulse Width	30	20		30	10		30	10		50	15		ns
t_{WSD}	Data Set-Up Time Prior to Write	0	−5		5	−5		0	−5		5	−5		ns
t_{WHD}	Data Hold Time After Write	5	0		5	0		5	0		5	0		ns
t_{WSA}	Address Set-Up Time	5	0		5	0		5	0		15	0		ns
t_{WHA}	Address Hold Time	5	0		5	0		5	0		5	0		ns
t_{WSCS}	Chip Select Set-Up Time	5	0		5	0		5	0		5	0		ns
t_{WHCS}	Chip Select Hold Time	5	0		5	0		5	0		5	0		ns

A.C. TEST CONDITIONS

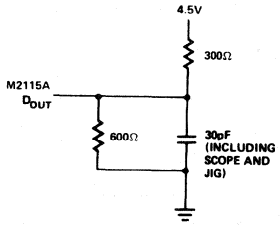

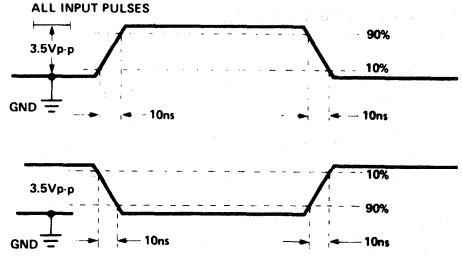

READ CYCLE

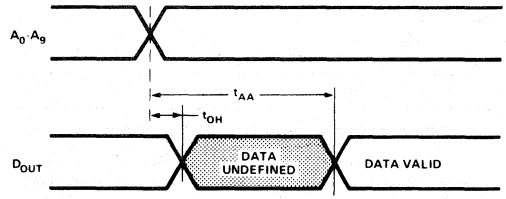

PROPAGATION DELAY FROM CHIP SELECT

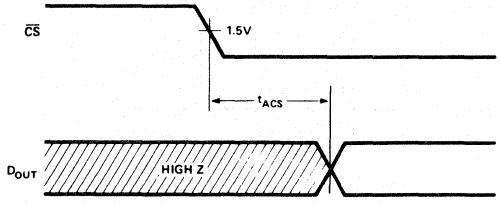

WRITE CYCLE

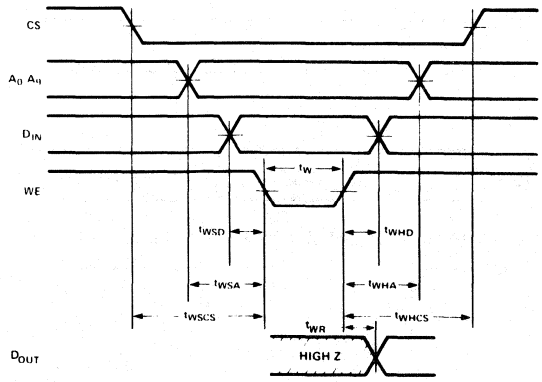

(ALL ABOVE MEASUREMENTS REFERENCED TO 1.5V)

2125A FAMILY WRITE ENABLE TO HIGH Z DELAY

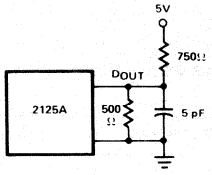

LOAD 1

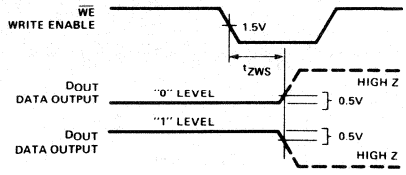

2125A FAMILY PROPAGATION DELAY FROM CHIP SELECT TO HIGH Z

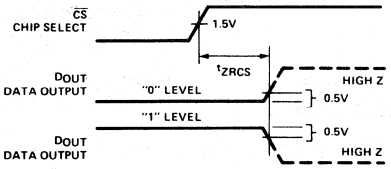

(ALL t_{ZXXX} PARAMETERS ARE MEASURED AT A DELTA OF 0.5V FROM THE LOGIC LEVEL AND USING LOAD 1.)

2115A/2125A FAMILY CAPACITANCE* V_{CC}= 5V, f = 1 MHz, T_A = 25°C

SYMBOL	TEST	2115A Family LIMITS		2125A Family LIMITS		UNITS	TEST CONDITIONS
		TYP.	MAX.	TYP.	MAX.		
C_I	Input Capacitance	3	5	3	5	pF	All Inputs = 0V, Output Open
C_O	Output Capacitance	5	8	5	8	pF	$\overline{CS}$ = 5V, All Other Inputs = 0V, Output Open

*This parameter is periodically sampled and is not 100% tested.

TYPICAL CHARACTERISTICS

I_{CC} VS. TEMPERATURE

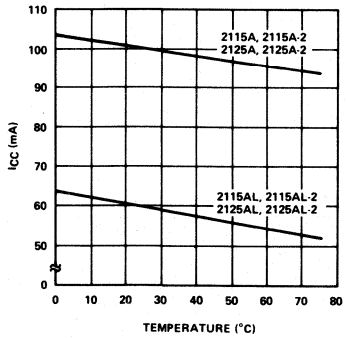

I_{CC} VS. V_{CC}

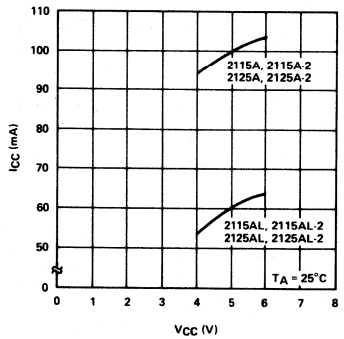

ACCESS TIME VS. TEMPERATURE

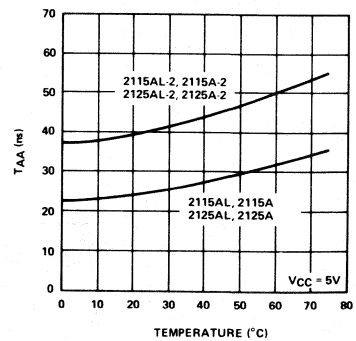

Printed in U.S.A./E286/1179/PS

2115H, 2125H FAMILY
HIGH SPEED 1K X 1 BIT STATIC RAM

	2125H-1	2115H-2, 2125H-2	2115H-3, 2125H-3	2115H-4, 2125H-4
Max. T_{AA} (ns)	20	25	30	35
Max. I_{CC} (mA)	150	125	100	125

- **HMOS II Technology**
- **Pin Compatible to 93415A (2115H) and 93425A (2125H)**
- **16mA Output Sink Current**
- **Low Operating Power Dissipation — Max. 0.53 mW/Bit (2115H-3, 2125H-3)**
- **TTL Inputs and Outputs**
- **Single +5V Supply**
- **Uncommitted Collector (2115H) and Three-State (2125H) Output**
- **Standard 16-Pin Dual In-Line Package**

The Intel® 2115H and 2125H families are high speed, 1024 words by 1-bit random access memories fabricated with HMOS II, Intel's advanced N-channel MOS silicon gate technology. Both open collector (2115H) and three-state output (2125H) are available. The 2115H and 2125H use fully DC stable (static) circuitry throughout — in both the array and the decoding and, therefore, require no clocks or refreshing to operate. The data is read out non-destructively and has the same polarity as the input data.

HMOS II's advanced technology allows the production of the industry's fastest, low power, 1K static RAMs — offering access times as low as 20ns.

HMOS II allows the production of the 2115H/2125H families, fully compatible with the 1K Bipolar RAMs yet offering substantial reductions in power dissipation. The power dissipations of 525mW maximum and 656mW maximum compared to 814mW maximum offer reductions of 19% and 36% respectively.

The devices are directly TTL compatible in all respects: inputs, outputs, and a single +5V supply. A separate select ($\overline{CS}$) lead allows easy selection of an individual package when outputs are OR-tied.

PIN CONFIGURATION

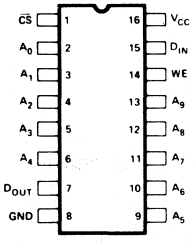

LOGIC SYMBOL

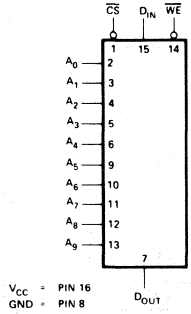

BLOCK DIAGRAM

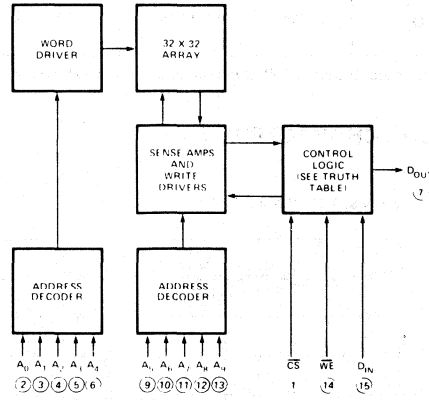

PIN NAMES

$\overline{CS}$	CHIP SELECT
A_0 TO A_9	ADDRESS INPUTS
$\overline{WE}$	WRITE ENABLE
D_{IN}	DATA INPUT
D_{OUT}	DATA OUTPUT

TRUTH TABLE

INPUTS			OUTPUT 2115H FAMILY	OUTPUT 2125H FAMILY	MODE
$\overline{CS}$	$\overline{WE}$	D_{IN}	D_{OUT}	D_{OUT}	
H	X	X	HIGH Z	HIGH Z	NOT SELECTED
L	L	L	HIGH Z	HIGH Z	WRITE "0"
L	L	H	HIGH Z	HIGH Z	WRITE "1"
L	H	X	D_{OUT}	D_{OUT}	READ

ABSOLUTE MAXIMUM RATINGS*

Temperature Under Bias . . . . . −10°C to +85°C
Storage Temperature . . . . . −65°C to +150°C
All Output or Supply Voltages . . . . . −0.5V to +7V
All Input Voltages . . . . . −1.5V to + 7V
D.C. Output Current . . . . . 20 mA

*COMMENT: Stresses above those listed under "Absolute Maximum Ratings" may cause permanent damage to the device. This is a stress rating only and functional operation of the device at these or at any other conditions above those indicated in the operational sections of this specification is not implied. Exposure to absolute maximum rating conditions for extended periods may affect device reliability.

D.C. CHARACTERISTICS [1,2]

V_{CC} = 5V ±5%, T_A = 0°C to 75°C

Symbol	Test	Min.	Typ.	Max.	Unit	Conditions
V_{OL}	2115H/25H Family Output Low Voltage			0.45	V	I_{OL} = 16 mA
V_{IH}	Input High Voltage	2.1			V	
V_{IL}	Input Low Voltage			0.8	V	
I_{IL}	Input Low Current		−0.1	−40	μA	V_{CC} = Max., V_{IN} = 0.4V
I_{IH}	Input High Current		0.1	40	μA	V_{CC} = Max., V_{IN} = 4.5V
$\|I_{CEX}\|$	2115H Family Output Leakage Current		0.1	100	μA	V_{CC} = Max., V_{OUT} = 4.5V
$\|I_{OFF}\|$	2125H Family Output Current (High Z)		0.1	50	μA	V_{CC} = Max., V_{OUT} = 0.5V/2.4V
I_{OS}	2125H Family Current Short Circuit to Ground		125	200	mA	V_{CC} = Max.
V_{OH}	Family Output High Voltage	2.4			V	I_{OH} = −5.2 mA
I_{CC}	Power Supply Current:					All Inputs Grounded, Output Open
	I_{CC1}: 2125H-1		80	150	mA	
	I_{CC2}: 2115H-2/2125H-2 2115H-4/2125H-4		80	125	mA	
	I_{CC3}: 2115H-3/2125H-3		80	100	mA	

NOTES:
1. The operating ambient temperature ranges are guaranteed with transverse air flow exceeding 400 linear feet per minute.
2. Typical limits are at V_{CC} = 5V, T_A = +25°C, and maximum loading.

2115H FAMILY A.C. CHARACTERISTICS

V_{CC} = 5V ±5%, T_A = 0°C to 75°C

READ CYCLE

Symbol	Test	2115H-2 Limits Min.	2115H-2 Limits Max.	2115H-3 Limits Min.	2115H-3 Limits Max.	2115H-4 Limits Min.	2115H-4 Limits Max.	Units
t_{ACS}	Chip Select Time		15		20		20	ns
t_{RCS} [1]	Chip Select Recovery Time		20		20		20	ns
t_{AA}	Address Access Time		25		30		35	ns
t_{OH} [1]	Previous Read Data Valid After Change of Address	0		0		0		ns

WRITE CYCLE

Symbol	Test	Min.	Max.	Min.	Max.	Min.	Max.	Units
t_{WS} [1]	Write Enable Time		15		20		20	ns
t_{WR}	Write Recovery Time	0	15	0	20	0	20	ns
t_W	Write Pulse Width	20		20		25		ns
t_{WSD}	Data Set-Up Time Prior to Write	0		0		0		ns
t_{WHD}	Data Hold Time After Write	0		0		0		ns
t_{WSA}	Address Set-Up Time	5		5		5		ns
t_{WHA}	Address Hold Time	0		0		0		ns
t_{WSCS}	Chip Select Set-Up Time	5		5		5		ns
t_{WHCS}	Chip Select Hold Time	0		5		5		ns

[1] These specifications are guaranteed by design and not production tested.

A.C. TEST CONDITIONS

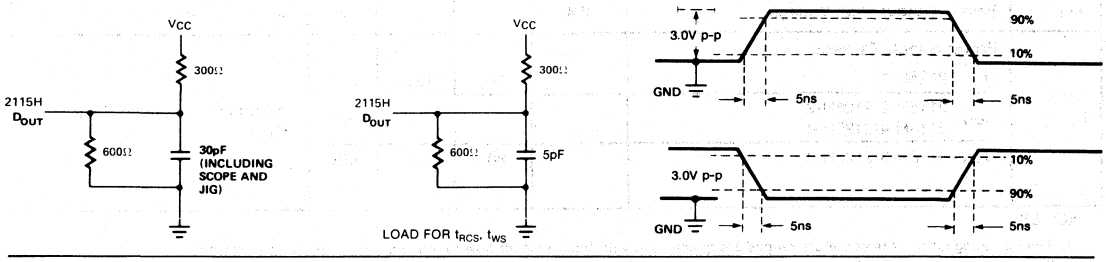

READ CYCLE

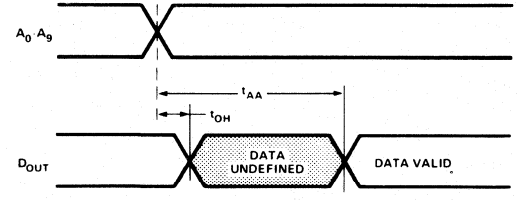

PROPAGATION DELAY FROM CHIP SELECT

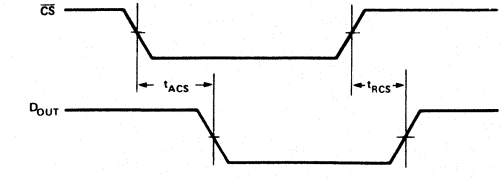

WRITE CYCLE

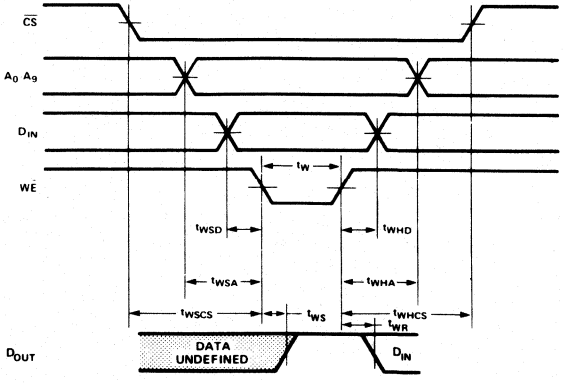

(ALL ABOVE MEASUREMENTS REFERENCED TO 1.5V)

2125H FAMILY A.C. CHARACTERISTICS

V_{CC} = 5V ±5%, T_A = 0°C to 75°C

READ CYCLE

Symbol	Test	2125H-1 Limits Min.	2125H-1 Limits Max.	2125H-2 Limits Min.	2125H-2 Limits Max.	2125H-3 Limits Min.	2125H-3 Limits Max.	2125H-4 Limits Min.	2125H-4 Limits Max.	Units
t_{ACS}	Chip Select Time		15		15		20		20	ns
t_{ZRCS} [1]	Chip Select to HIGH Z		20		20		20		20	ns
t_{AA}	Address Access Time		20		25		30		35	ns
t_{OH} [1]	Previous Read Data Valid After Change of Address	0		0		0		0		ns

WRITE CYCLE

Symbol	Test	Min.	Max.	Min.	Max.	Min.	Max.	Min.	Max.	Units
t_{ZWS} [1]	Write Enable to HIGH Z		15		15		20		20	ns
t_{WR}	Write Recovery Time	0	15	0	15	0	20	0	20	ns
t_W	Write Pulse Width	15		20		20		25		ns
t_{WSD}	Data Set-Up Time Prior to Write	0		0		0		0		ns
t_{WHD}	Data Hold Time After Write	0		0		0		0		ns
t_{WSA}	Address Set-Up Time	5		5		5		5		ns
t_{WHA} [1]	Address Hold Time	0		0		0		0		ns
t_{WSCS}	Chip Select Set-Up Time	5		5		5		5		ns
t_{WHCS}	Chip Select Hold Time	0		0		5		5		ns

[1] These specifications are guaranteed by design and not production tested.

A.C. TEST CONDITIONS

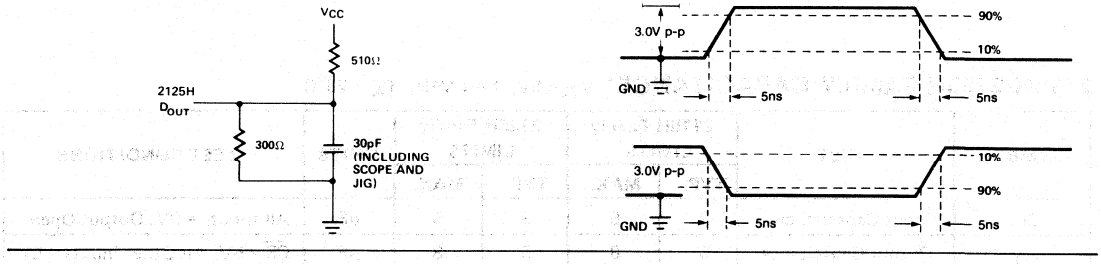

READ CYCLE

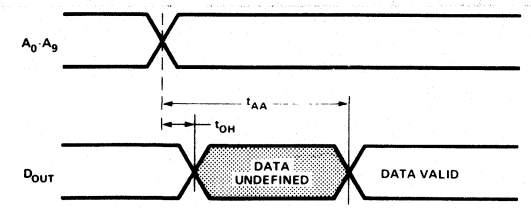

PROPAGATION DELAY FROM CHIP SELECT

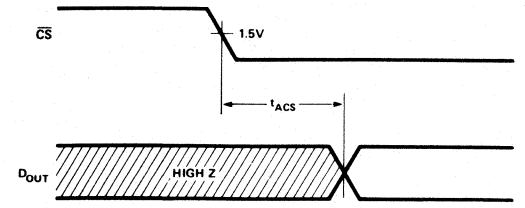

WRITE CYCLE

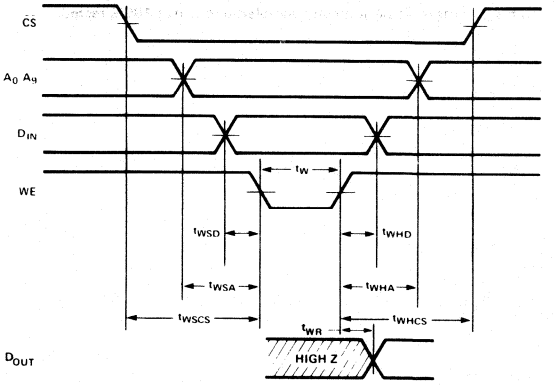

(ALL ABOVE MEASUREMENTS REFERENCED TO 1.5V)

2125H FAMILY WRITE ENABLE TO HIGH Z DELAY

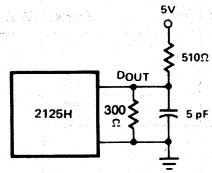

LOAD 1

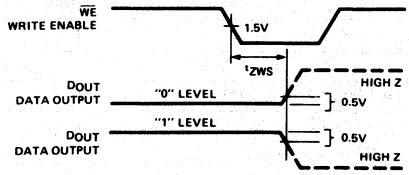

2125H FAMILY PROPAGATION DELAY FROM CHIP SELECT TO HIGH Z

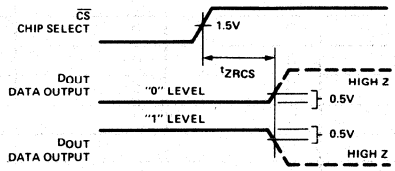

(ALL t_{ZXXX} PARAMETERS ARE MEASURED AT A DELTA OF 0.5V FROM THE LOGIC LEVEL AND USING LOAD 1.)

2115H/2125H FAMILY CAPACITANCE* V_{CC}= 5V, f = 1 MHz, T_A = 25°C

SYMBOL	TEST	2115H Family LIMITS		2125H Family LIMITS		UNITS	TEST CONDITIONS
		TYP.	MAX.	TYP.	MAX.		
C_I	Input Capacitance	3	5	3	5	pF	All Inputs = 0V, Output Open
C_O	Output Capacitance	5	8	5	8	pF	$\overline{CS}$ = 5V, All Other Inputs = 0V, Output Open

*This parameter is periodically sampled and is not 100% tested.

2118 FAMILY
16,384 x 1 BIT DYNAMIC RAM

	2118-10	2118-12	2118-15
Maximum Access Time (ns)	100	120	150
Read, Write Cycle (ns)	235	270	320
Read-Modify-Write Cycle (ns)	285	320	410

- **Single +5V Supply, ±10% Tolerance**
- **HMOS Technology**
- **Low Power: 150 mW Max. Operating**
  11 mW Max. Standby
- **Low V_{DD} Current Transients**
- **All Inputs, Including Clocks, TTL Compatible**
- **$\overline{CAS}$ Controlled Output is Three-State, TTL Compatible**
- **$\overline{RAS}$ Only Refresh**
- **128 Refresh Cycles Required Every 2ms**
- **Page Mode and Hidden Refresh Capability**
- **Allows Negative Overshoot V_{IL} min = -2V**

The Intel® 2118 is a 16,384 word by 1-bit Dynamic MOS RAM designed to operate from a single +5V power supply. The 2118 is fabricated using HMOS — a production proven process for high performance, high reliability, and high storage density.

The 2118 uses a single transistor dynamic storage cell and advanced dynamic circuitry to achieve high speed with low power dissipation. The circuit design minimizes the current transients typical of dynamic RAM operation. These low current transients contribute to the high noise immunity of the 2118 in a system environment.

Multiplexing the 14 address bits into the 7 address input pins allows the 2118 to be packaged in the industry standard 16-pin DIP. The two 7-bit address words are latched into the 2118 by the two TTL clocks, Row Address Strobe ($\overline{RAS}$) and Column Address Strobe ($\overline{CAS}$). Non-critical timing requirements for $\overline{RAS}$ and $\overline{CAS}$ allow use of the address multiplexing technique while maintaining high performance.

The 2118 three-state output is controlled by $\overline{CAS}$, independent of $\overline{RAS}$. After a valid read or read-modify-write cycle, data is latched on the output by holding $\overline{CAS}$ low. The data out pin is returned to the high impedance state by returning $\overline{CAS}$ to a high state. The 2118 hidden refresh feature allows $\overline{CAS}$ to be held low to maintain latched data while $\overline{RAS}$ is used to execute $\overline{RAS}$-only refresh cycles.

The single transistor storage cell requires refreshing for data retention. Refreshing is accomplished by performing $\overline{RAS}$-only refresh cycles, hidden refresh cycles, or normal read or write cycles on the 128 address combinations of A_0 through A_6 during a 2ms period. A write cycle will refresh stored data on all bits of the selected row except the bit which is addressed.

PIN CONFIGURATION

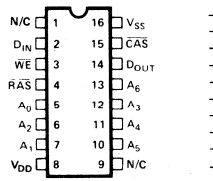

LOGIC SYMBOL

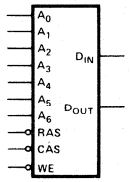

A_0-A_6	ADDRESS INPUTS
$\overline{CAS}$	COLUMN ADDRESS STROBE
D_{IN}	DATA IN
D_{OUT}	DATA OUT
$\overline{WE}$	WRITE ENABLE
$\overline{RAS}$	ROW ADDRESS STROBE
V_{DD}	POWER (+5V)
V_{SS}	GROUND

BLOCK DIAGRAM

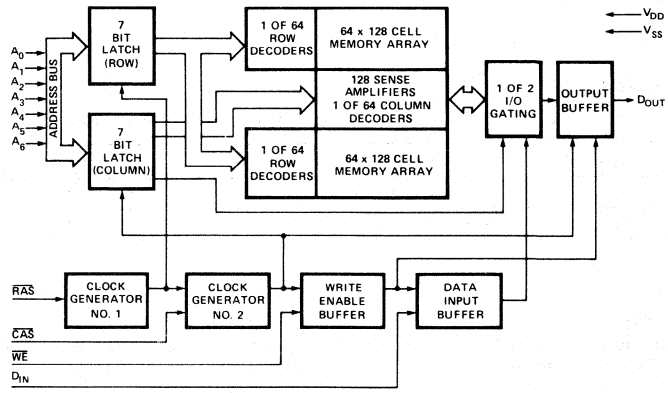

ABSOLUTE MAXIMUM RATINGS*

Ambient Temperature Under Bias ... -10°C to +80°C
Storage Temperature ..... -65°C to +150°C
Voltage on Any Pin Relative to V_{SS} 7.5V
Data Out Current 50mA
Power Dissipation 1.0W

*COMMENT:

Stresses above those listed under "Absolute Maximum Rating" may cause permanent damage to the device. This is a stress rating only and functional operation of the device at these or at any other condition above those indicated in the operational sections of this specification is not implied. Exposure to absolute maximum rating conditions for extended periods may affect device reliability.

D.C. AND OPERATING CHARACTERISTICS[1]

T_A = 0°C to 70°C, V_{DD} = 5V ±10%, V_{SS} = 0V, unless otherwise noted.

Symbol	Parameter	Limits Min.	Typ.[2]	Max.	Unit	Test Conditions	Notes
$\|I_{LI}\|$	Input Load Current (any input)		0.1	10	µA	V_{IN}=V_{SS} to V_{DD}	
$\|I_{LO}\|$	Output Leakage Current for High Impedance State		0.1	10	µA	Chip Deselected: $\overline{CAS}$ at V_{IH}, V_{OUT} = 0 to 5.5V	
I_{DD1}	V_{DD} Supply Current, Standby		1.2	2	mA	$\overline{CAS}$ and $\overline{RAS}$ at V_{IH}	
I_{DD2}	V_{DD} Supply Current, Operating		23	27	mA	2118-10, t_{RC} = t_{RCMIN}	3
			21	25	mA	2118-12, t_{RC} = t_{RCMIN}	3
			19	23	mA	2118-15, t_{RC} = t_{RCMIN}	3
I_{DD3}	V_{DD} Supply Current; $\overline{RAS}$-Only Cycle		16	18	mA	2118-10, t_{RC} = t_{RCMIN}	3
			14	16	mA	2118-12, t_{RC} = t_{RCMIN}	3
			12	14	mA	2118-15, t_{RC} = t_{RCMIN}	3
I_{DD5}	V_{DD} Supply Current, Standby, Output Enabled		2	4	mA	$\overline{CAS}$ at V_{IL}, $\overline{RAS}$ at V_{IH}	3
V_{IL}	Input Low Voltage (all inputs)	-2.0		0.8	V		
V_{IH}	Input High Voltage (all inputs)	2.4		7.0	V		
V_{OL}	Output Low Voltage			0.4	V	I_{OL} = 4.2mA	
V_{OH}	Output High Voltage	2.4			V	I_{OH} = -5mA	

NOTES:
1. All voltages referenced to V_{SS}.
2. Typical values are for T_A = 25°C and nominal supply voltages.
3. I_{DD} is dependent on output loading when the device output is selected. Specified $I_{DD\ MAX}$ is measured with the output open.

CAPACITANCE[1]

T_A = 25°C, V_{DD} = 5V ±10%, V_{SS} = 0V, unless otherwise noted.

Symbol	Parameter	Typ.	Max.	Unit
C_{I1}	Address, Data In	3	5	pF
C_{I2}	$\overline{RAS}$, $\overline{CAS}$, $\overline{WE}$, Data Out	4	7	pF

NOTES:
1. Capacitance measured with Boonton Meter or effective capacitance calculated from the equation:
$C = \frac{I\Delta t}{\Delta V}$ with ΔV equal to 3 volts and power supplies at nominal levels.

A.C. CHARACTERISTICS[1,2,3]

T_A = 0°C to 70°C, V_{DD} = 5V ±10%, V_{SS} = 0V, unless otherwise noted.

READ, WRITE, READ-MODIFY-WRITE AND REFRESH CYCLES

Symbol	Parameter	2118-10		2118-12		2118-15		Unit	Notes
		Min.	Max.	Min.	Max.	Min.	Max.		
t_{RAC}	Access Time From $\overline{RAS}$		100		120		150	ns	4,5
t_{CAC}	Access Time From $\overline{CAS}$		55		65		80	ns	4,5,6
t_{REF}	Time Between Refresh		2		2		2	ms	
t_{RP}	$\overline{RAS}$ Precharge Time	110		120		135		ns	
t_{CPN}	$\overline{CAS}$ Precharge Time(non-page cycles)	50		55		70		ns	
t_{CRP}	$\overline{CAS}$ to $\overline{RAS}$ Precharge Time	0		0		0		ns	
t_{RCD}	$\overline{RAS}$ to $\overline{CAS}$ Delay Time	25	45	25	55	25	70	ns	7
t_{RSH}	$\overline{RAS}$ Hold Time	70		85		105		ns	
t_{CSH}	$\overline{CAS}$ Hold Time	100		120		165		ns	
t_{ASR}	Row Address Set-Up Time	0		0		0		ns	
t_{RAH}	Row Address Hold Time	15		15		15		ns	
t_{ASC}	Column Address Set-Up Time	0		0		0		ns	
t_{CAH}	Column Address Hold Time	15		15		20		ns	
t_{AR}	Column Address Hold Time, to $\overline{RAS}$	60		70		90		ns	
t_T	Transition Time (Rise and Fall)	3	50	3	50	3	50	ns	8
t_{OFF}	Output Buffer Turn Off Delay	0	45	0	50	0	60	ns	
READ AND REFRESH CYCLES									
t_{RC}	Random Read Cycle Time	235		270		320		ns	
t_{RAS}	$\overline{RAS}$ Pulse Width	115	10000	140	10000	175	10000	ns	
t_{CAS}	$\overline{CAS}$ Pulse Width	55	10000	65	10000	95	10000	ns	
t_{RCS}	Read Command Set-Up Time	0		0		0		ns	
t_{RCH}	Read Command Hold Time	0		0		0		ns	
WRITE CYCLE									
t_{RC}	Random Write Cycle Time	235		270		320		ns	
t_{RAS}	$\overline{RAS}$ Pulse Width	115	10000	140	10000	175	10000	ns	
t_{CAS}	$\overline{CAS}$ Pulse Width	55	10000	65	10000	95	10000	ns	
t_{WCS}	Write Command Set-Up Time	0		0		0		ns	9
t_{WCH}	Write Command Hold Time	25		30		45		ns	
t_{WCR}	Write Command Hold Time, to $\overline{RAS}$	70		85		115		ns	
t_{WP}	Write Command Pulse Width	25		30		50		ns	
t_{RWL}	Write Command to $\overline{RAS}$ Lead Time	60		65		110		ns	
t_{CWL}	Write Command to $\overline{CAS}$ Lead Time	45		50		100		ns	
t_{DS}	Data-In Set-Up Time	0		0		0		ns	
t_{DH}	Data-In Hold Time	25		30		45		ns	
t_{DHR}	Data-In Hold Time, to $\overline{RAS}$	70		85		115		ns	
READ-MODIFY-WRITE CYCLE									
t_{RWC}	Read-Modify-Write Cycle Time	285		320		410		ns	
t_{RRW}	RMW Cycle $\overline{RAS}$ Pulse Width	165	10000	190	10000	265	10000	ns	
t_{CRW}	RMW Cycle $\overline{CAS}$ Pulse Width	105	10000	120	10000	185	10000	ns	
t_{RWD}	$\overline{RAS}$ to $\overline{WE}$ Delay	100		120		150		ns	9
t_{CWD}	$\overline{CAS}$ to $\overline{WE}$ Delay	55		65		80		ns	9

NOTES:

1. All voltages referenced to V_{SS}.
2. Eight cycles are required after power-up or prolonged periods (greater than 2ms) of $\overline{RAS}$ inactivity before proper device operation is achieved. Any 8 cycles which perform refresh are adequate for this purpose.
3. A.C. Characteristics assume t_T = 5ns.
4. Assume that $t_{RCD} \leq t_{RCD}$ (max.). If t_{RCD} is greater than t_{RCD} (max.) then t_{RAC} will increase by the amount that t_{RCD} exceeds t_{RCD} (max.).
5. Load = 2 TTL loads and 100pF.
6. Assumes $t_{RCD} \geq t_{RCD}$ (max.).
7. t_{RCD} (max.) is specified as a reference point only; if t_{RCD} is less than t_{RCD} (max.) access time is t_{RAC}, if t_{RCD} is greater than t_{RCD} (max.) access time is $t_{RCD} + t_{CAC}$.
8. t_T is measured between V_{IH} (min.) and V_{IL} (max.).
9. t_{WCS}, t_{CWD} and t_{RWD} are specified as reference points only. If $t_{WCS} \geq t_{WCS}$ (min.) the cycle is an early write cycle and the data out pin will remain high impedance throughout the entire cycle. If $t_{CWD} \geq t_{CWD}$ (min.) and $t_{RWD} \geq t_{RWD}$ (min.), the cycle is a read-modify-write cycle and the data out will contain the data read from the selected address. If neither of the above conditions is satisfied, the condition of the data out is indeterminate.

WAVEFORMS

READ CYCLE

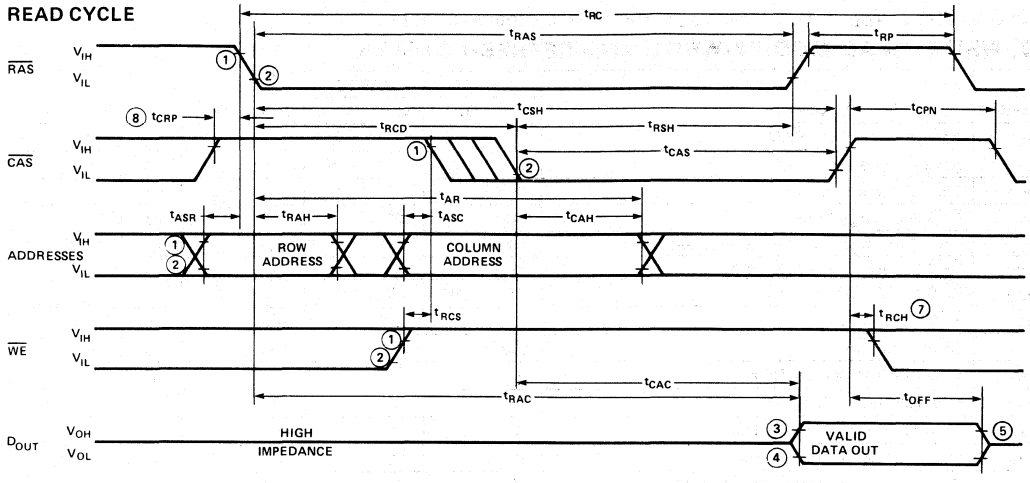

WRITE CYCLE

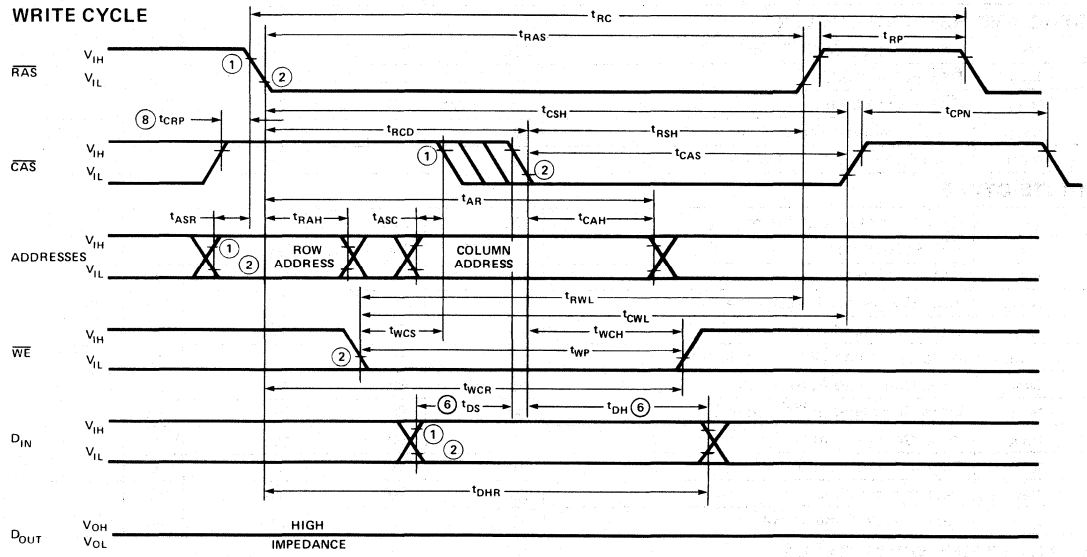

NOTES:
1,2. $V_{IH\ MIN}$ AND $V_{IL\ MAX}$ ARE REFERENCE LEVELS FOR MEASURING TIMING OF INPUT SIGNALS.
3,4. $V_{OH\ MIN}$ AND $V_{OL\ MAX}$ ARE REFERENCE LEVELS FOR MEASURING TIMING OF D_{OUT}.
5. t_{OFF} IS MEASURED TO $|I_{OUT}| < |I_{LO}|$.
6. t_{DS} AND t_{DH} ARE REFERENCED TO $\overline{CAS}$ OR $\overline{WE}$, WHICHEVER OCCURS LAST.
7. t_{RCH} IS REFERENCED TO THE TRAILING EDGE OF $\overline{CAS}$ OR $\overline{RAS}$, WHICHEVER OCCURS FIRST.
8. t_{CRP} REQUIREMENT IS ONLY APPLICABLE FOR $\overline{RAS}$/$\overline{CAS}$ CYCLES PRECEEDED BY A $\overline{CAS}$-ONLY CYCLE (i.e., FOR SYSTEMS WHERE $\overline{CAS}$ HAS NOT BEEN DECODED WITH $\overline{RAS}$).

WAVEFORMS

READ-MODIFY-WRITE CYCLE

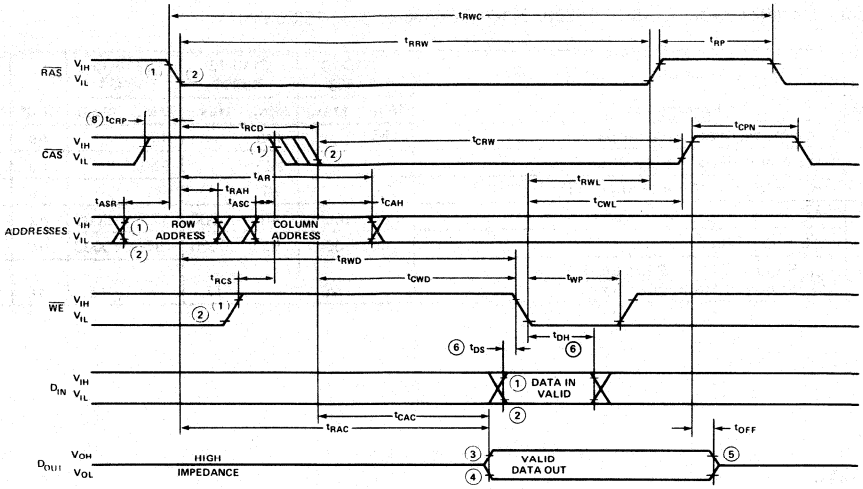

RAS-ONLY REFRESH CYCLE

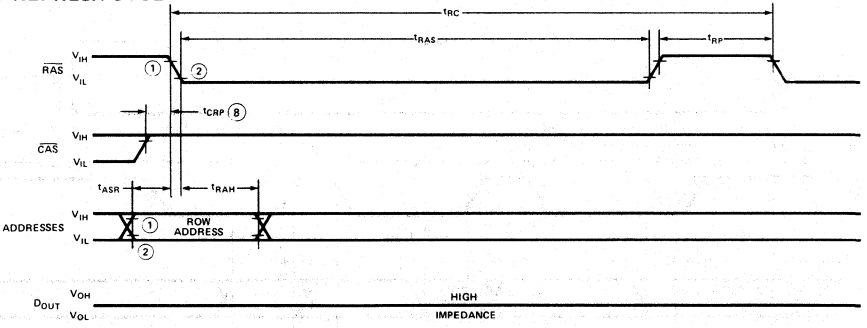

HIDDEN REFRESH CYCLE
(For Hidden Refresh Operation order 2118-10 S6445, 2118-12 S6446 or 2118-15 S6447)

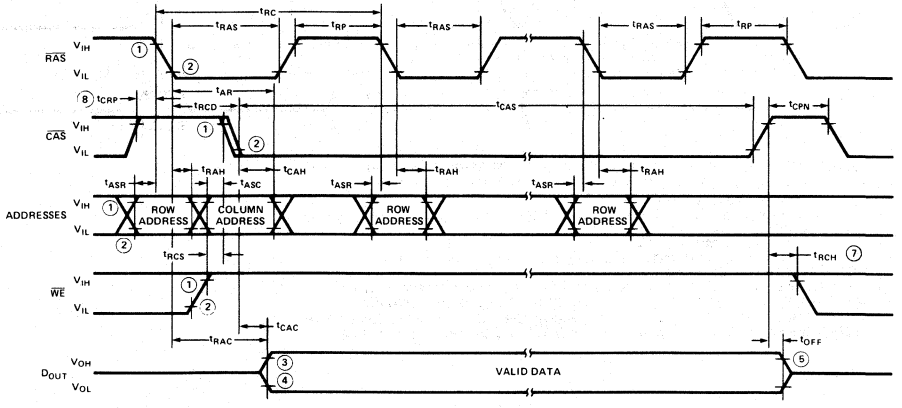

NOTES: 1,2. $V_{IH\ MIN}$ AND $V_{IL\ MAX}$ ARE REFERENCE LEVELS FOR MEASURING TIMING OF INPUT SIGNALS.
3,4. $V_{OH\ MIN}$ AND $V_{OL\ MAX}$ ARE REFERENCE LEVELS FOR MEASURING TIMING OF D_{OUT}.
5. t_{OFF} IS MEASURED TO $|I_{OUT}| \leq |I_{LO}|$.
6. t_{DS} AND t_{DH} ARE REFERENCED TO $\overline{CAS}$ OR $\overline{WE}$, WHICHEVER OCCURS LAST.
7. t_{RCH} IS REFERENCED TO THE TRAILING EDGE OF $\overline{CAS}$ OR $\overline{RAS}$, WHICHEVER OCCURS FIRST.
8. t_{CRP} REQUIREMENT IS ONLY APPLICABLE FOR $\overline{RAS}$/$\overline{CAS}$ CYCLES PRECEEDED BY A $\overline{CAS}$-ONLY CYCLE (i.e., FOR SYSTEMS WHERE $\overline{CAS}$ HAS NOT BEEN DECODED WITH $\overline{RAS}$).

D.C. AND A.C. CHARACTERISTICS, PAGE MODE [7,8,11]

T_A = 0°C to 70°C, V_{DD} = 5V ±10%, V_{SS} = 0V, unless otherwise noted.

(For Page Mode Operation order 2118-10 S6329, 2118-12 S6330 or 2118-15 S6331)

Symbol	Parameter	2118-10 S6329 Min.	2118-10 S6329 Max.	2118-12 S6330 Min.	2118-12 S6330 Max.	2118-15 S6331 Min.	2118-15 S6331 Max.	Unit	Notes
t_{PC}	Page Mode Read or Write Cycle	125		145		190		ns	
t_{PCM}	Page Mode Read Modify Write Cycle	175		200		280		ns	
t_{CP}	$\overline{CAS}$ Precharge Time, Page Cycle	60		70		85		ns	
t_{RPM}	$\overline{RAS}$ Pulse Width, Page Mode	115	10000	140	10000	175	10000	ns	
t_{CAS}	$\overline{CAS}$ Pulse Width	55	10000	65	10000	95	10000	ns	
I_{DD4}	V_{DD} Supply Current Page Mode, Minimum t_{PC}, Minimum t_{CAS}		20		17		15	mA	

WAVEFORMS

PAGE MODE READ CYCLE

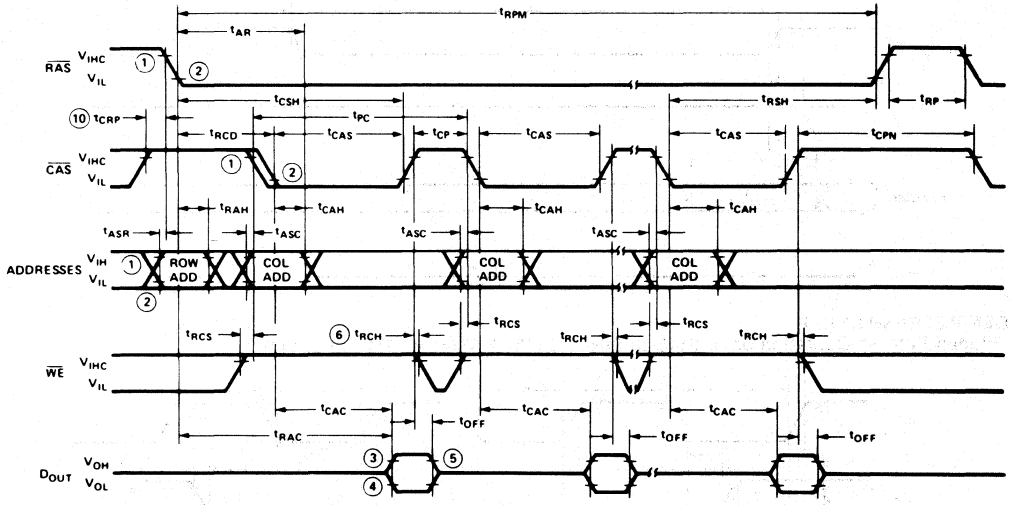

NOTES:
1,2. $V_{IH\ MIN}$ AND $V_{IL\ MAX}$ ARE REFERENCE LEVELS FOR MEASURING TIMING OF INPUT SIGNALS.
3,4. $V_{OH\ MIN}$ AND $V_{OL\ MAX}$ ARE REFERENCE LEVELS FOR MEASURING TIMING OF D_{OUT}.
5. t_{OFF} IS MEASURED TO $|I_{OUT}| = |I_{LO}|$.
6. t_{RCH} IS REFERENCED TO THE TRAILING EDGE OF $\overline{CAS}$ OR $\overline{RAS}$, WHICHEVER OCCURS FIRST.
7. ALL VOLTAGES REFERENCED TO V_{SS}.
8. AC CHARACTERISTIC ASSUME t_T = 5ns.
9. SEE THE TYPICAL CHARACTERISTICS SECTION FOR VALUES OF THIS PARAMETER UNDER ALTERNATE CONDITIONS.
10. t_{CRP} REQUIREMENT IS ONLY APPLICABLE FOR $\overline{RAS}$/$\overline{CAS}$ CYCLES PRECEEDED BY A $\overline{CAS}$-ONLY CYCLE (i.e., FOR SYSTEMS WHERE $\overline{CAS}$ HAS NOT BEEN DECODED WITH $\overline{RAS}$).
11. ALL PREVIOUSLY SPECIFIED A.C. AND D.C. CHARACTERISTICS ARE APPLICABLE TO THEIR RESPECTIVE PAGE MODE DEVICE (i.e., 2118-10 S6329 WILL OPERATE AS A 2118-10).

PAGE MODE WRITE CYCLE

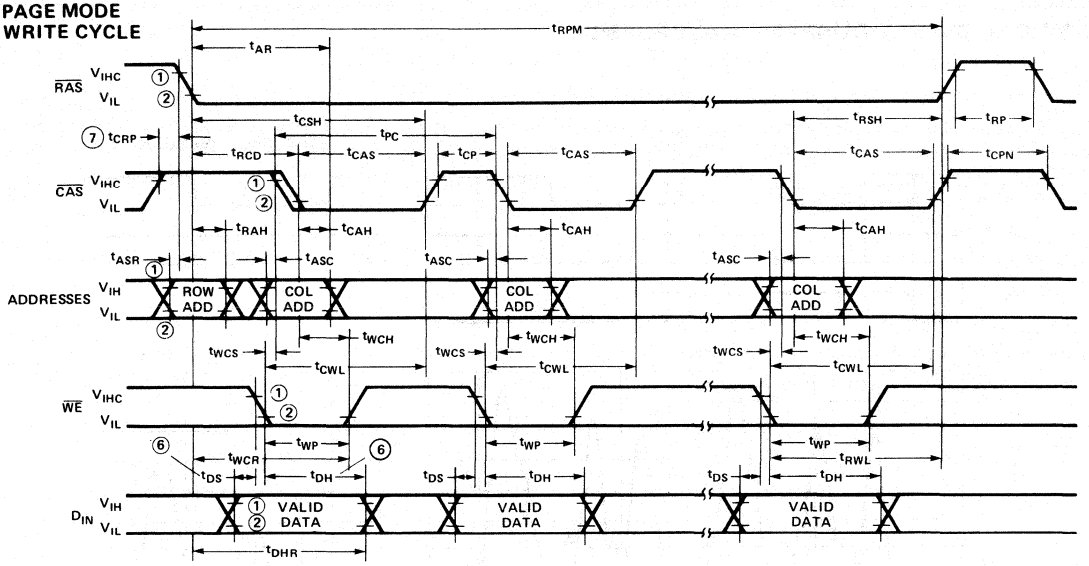

PAGE MODE READ-MODIFY-WRITE CYCLE

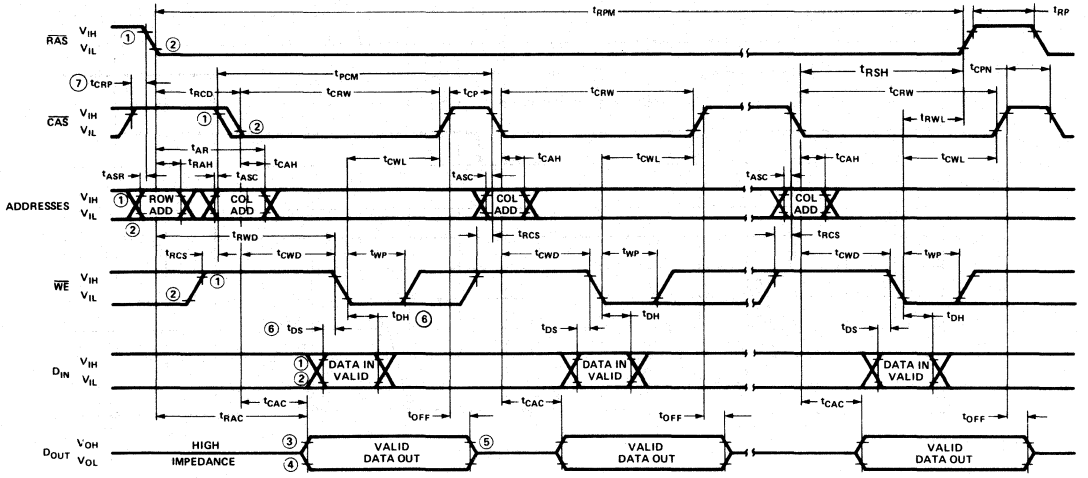

NOTES:
1,2. $V_{IH\ MIN}$ AND $V_{IL\ MAX}$ ARE REFERENCE LEVELS FOR MEASURING TIMING OF INPUT SIGNALS.
3,4. $V_{OH\ MIN}$ AND $V_{OL\ MAX}$ ARE REFERENCE LEVELS FOR MEASURING TIMING OF D_{OUT}.
5. t_{OFF} IS MEASURED TO $|I_{OUT}| \leq |I_{LO}|$.
6. t_{DS} AND t_{DH} ARE REFERENCED TO $\overline{CAS}$ OR $\overline{WE}$, WHICHEVER OCCURS LAST.
7. t_{RCH} IS REFERENCED TO THE TRAILING EDGE OF $\overline{CAS}$ OR $\overline{RAS}$, WHICHEVER OCCURS FIRST.
8. t_{CRP} REQUIREMENT IS ONLY APPLICABLE FOR $\overline{RAS}$/$\overline{CAS}$ CYCLES PRECEEDED BY A $\overline{CAS}$-ONLY CYCLE (i.e., FOR SYSTEMS WHERE $\overline{CAS}$ HAS NOT BEEN DECODED WITH $\overline{RAS}$).

TYPICAL SUPPLY CURRENT WAVEFORMS

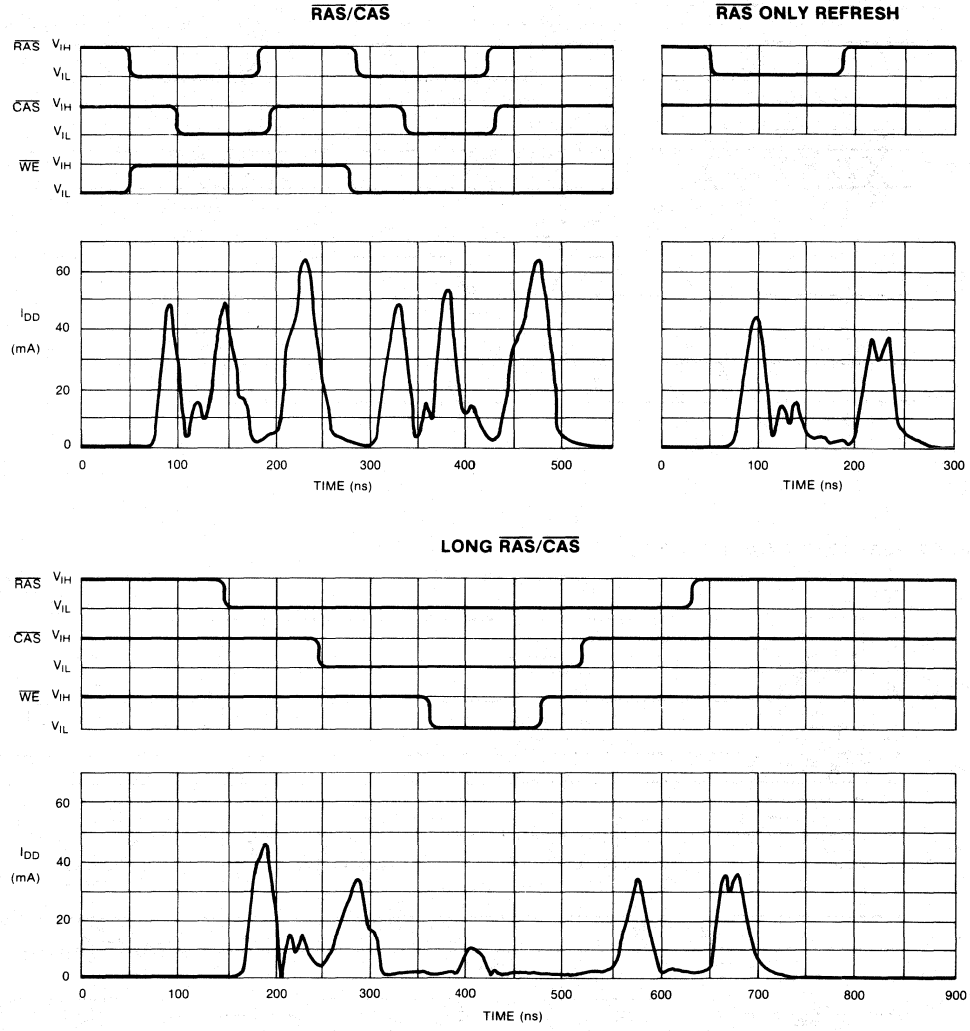

Typical power supply waveforms vs. time are shown for the $\overline{RAS}/\overline{CAS}$ timings of Read/Write, Read/Write (Long $\overline{RAS}/\overline{CAS}$), and $\overline{RAS}$-only refresh cycles. I_{DD} current transients at the $\overline{RAS}$ and $\overline{CAS}$ edges require adequate decoupling of these supplies.

The effects of cycle time, V_{DD} supply voltage and ambient temperature on the I_{DD} current are shown in graphs included in the Typical Characteristics Section. Each family of curves for I_{DD1}, I_{DD2}, and I_{DD3} is related by a common point at $V_{DD} = 5.0V$ and $T_A = 25°C$ for two given t_{RAS} pulse widths. The typical I_{DD} current for a given condition of cycle time, V_{DD} and T_A can be determined by combining the effects of the appropriate family of curves.

TYPICAL CHARACTERISTICS

GRAPH 1
TYPICAL ACCESS TIME
t_{RAC} (NORMALIZED) VS. V_{DD}

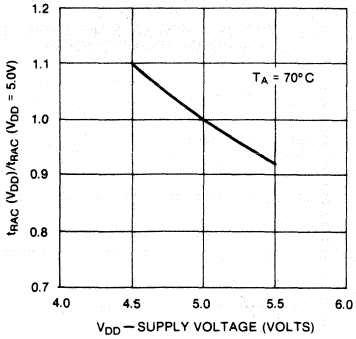

GRAPH 2
TYPICAL ACCESS TIME
t_{RAC} (NORMALIZED) VS.
AMBIENT TEMPERATURE

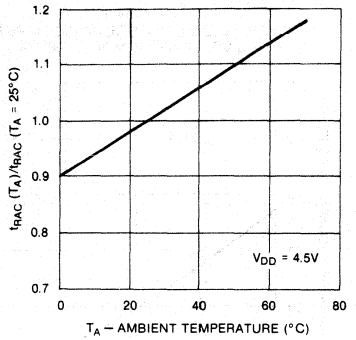

GRAPH 3
TYPICAL STANDBY CURRENT
I_{DD1} VS. V_{DD}

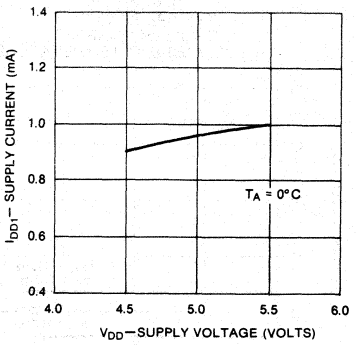

GRAPH 4
TYPICAL STANDBY CURRENT
I_{DD1} VS. AMBIENT TEMPERATURE

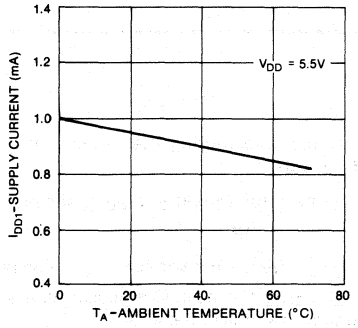

GRAPH 5
TYPICAL OPERATING CURRENT
I_{DD2} VS. t_{RC}

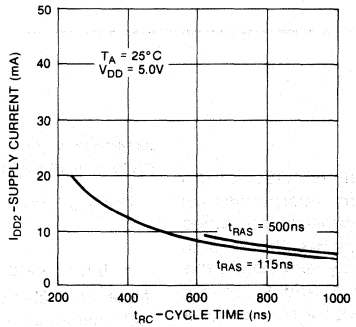

GRAPH 6
TYPICAL OPERATING CURRENT
I_{DD2} VS. V_{DD}

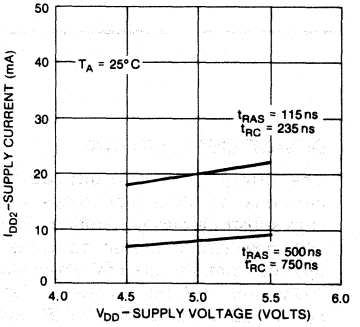

GRAPH 7
TYPICAL OPERATING CURRENT
I_{DD2} VS. AMBIENT TEMPERATURE

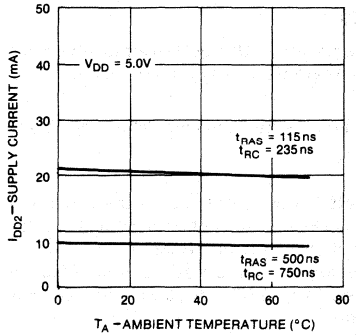

GRAPH 8
TYPICAL $\overline{RAS}$ ONLY
REFRESH CURRENT
I_{DD3} VS. t_{RC}

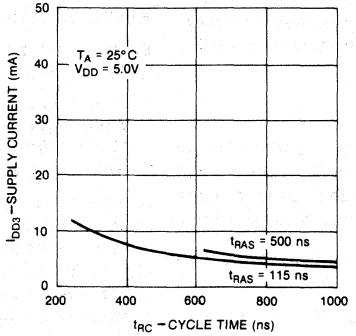

GRAPH 9
TYPICAL $\overline{RAS}$ ONLY
REFRESH CYCLE
I_{DD3} VS. V_{DD}

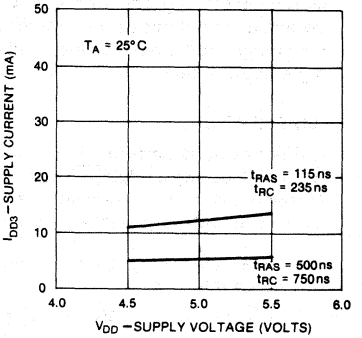

TYPICAL CHARACTERISTICS

GRAPH 10
TYPICAL $\overline{RAS}$ ONLY
REFRESH CURRENT
I_{DD3} VS. AMBIENT TEMPERATURE

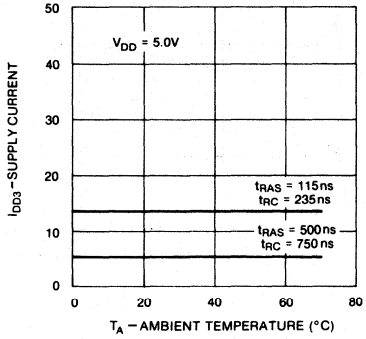

GRAPH 11
TYPICAL OUTPUT SOURCE CURRENT
I_{OH} VS. OUTPUT VOLTAGE V_{OH}

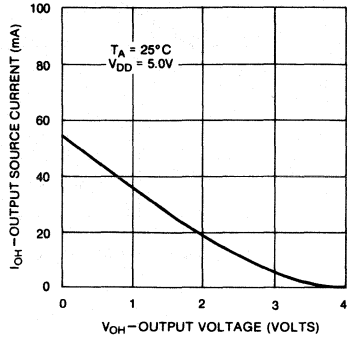

GRAPH 12
TYPICAL OUTPUT SINK CURRENT
I_{OL} VS. OUTPUT VOLTAGE V_{OL}

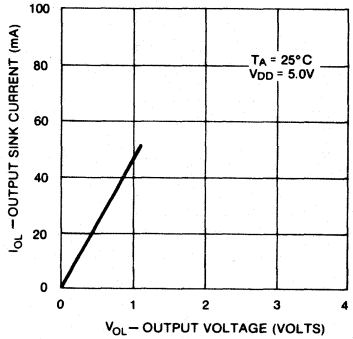

DEVICE DESCRIPTION

The Intel® 2118 is produced with HMOS, a high performance MOS technology which incorporates on chip substrate bias generation. This process, combined with new circuit design concepts, allows the 2118 to operate from a single +5V power supply, eliminating the +12V and -5V requirements. Pins 1 and 9 are not connected, which allows P.C.B. layout for future higher density memory generations.

The 2118 is functionally compatible with the industry standard 16-pin 16K dynamic RAMs, except for the power supply requirements. Replacing the +12V supply with a +5V supply and eliminating the -5V bias altogether, allows simple upgrade both in power and performance. To achieve total speed performance upgrade, however, the timing ciruitry must be modified to accommodate the higher performance.

READ CYCLE

A Read cycle is performed by maintaining Write Enable ($\overline{WE}$) high during a $\overline{RAS}/\overline{CAS}$ operation. The output pin of a selected device will remain in a high impedance state until valid data appears at the output at access time.

Device access time, t_{ACC}, is the longer of the two calculated intervals:

1. $t_{ACC} = t_{RAC}$ OR 2. $t_{ACC} = t_{RCD} + t_{CAC}$

Access time from $\overline{RAS}$, t_{RAC}, and access time from $\overline{CAS}$, t_{CAC}, are device parameters. Row to column address strobe delay time, t_{RCD}, are system dependent timing parameters. For example, substituting the device parameters of the 2118-3 yields:

3. $t_{ACC} = t_{RAC}$ = 100nsec for 25nsec $\leq t_{RCD} \leq$ 45nsec

OR

4. $t_{ACC} = t_{RCD} + t_{CAC} = t_{RCD}$ + 55nsec for $t_{RCD} >$ 45nsec

Note that if 25nsec $\leq t_{RCD} \leq$ 45nsec device access time is determined by equation 3 and is equal to t_{RAC}. If $t_{RCD} >$ 45nsec access time is determined by equation 4. This 20nsec interval (shown in the t_{RCD} inequality in equation 3) in which the falling edge of $\overline{CAS}$ can occur without affecting access time is provided to allow for system timing skew in the generation of $\overline{CAS}$.

REFRESH CYCLES

Each of the 128 rows of the 2118 must be refreshed every 2 milliseconds to maintain data. Any memory cycle:

1. Read Cycle
2. Write Cycle (Early Write, Delayed Write or Read-Modify-Write)
3. $\overline{RAS}$-only Cycle

refreshes the selected row as defined by the low order ($\overline{RAS}$) addresses. Any Write cycle, of course, may change the state of the selected cell. Using a Read, Write, or Read-Modify-Write cycle for refresh is not recommended for systems which utilize "wire-OR" outputs since output bus contention will occur.

A $\overline{RAS}$-only refresh cycle is the recommended technique for most applications to provide for data retention. A $\overline{RAS}$-only refresh cycle maintains the D_{OUT} in the high

impedance state with a typical power reduction of 30% over a Read or Write cycle.

$\overline{RAS}/\overline{CAS}$ TIMING

$\overline{RAS}$ and $\overline{CAS}$ have minimum pulse widths as defined by t_{RAS} and t_{CAS} respectively. These minimum pulse widths must be maintained for proper device operation and data integrity. A cycle, once begun by bringing $\overline{RAS}$ and/or $\overline{CAS}$ low must not be ended or aborted prior to fulfilling the minimum clock signal pulse width(s). A new cycle can not begin until the minimum precharge time, t_{RP}, has been met.

DATA OUTPUT OPERATION

The 2118 Data Output (D_{OUT}), which has three-state capability, is controlled by $\overline{CAS}$. During $\overline{CAS}$ high state ($\overline{CAS}$ at V_{IH}) the output is in the high impedance state. The following table summarizes the D_{OUT} state for various types of cycles.

Intel 2118 Data Output Operation for Various Types of Cycles

Type of Cycle	D_{OUT} State
Read Cycle	Data From Addressed Memory Cell
Early Write Cycle	HI-Z
$\overline{RAS}$-Only Refresh Cycle	HI-Z
$\overline{CAS}$-Only Cycle	HI-Z
Read/Modify/Write Cycle	Data From Addressed Memory Cell
Delayed Write Cycle	Indeterminate

HIDDEN REFRESH

An optional feature of the 2118 is that refresh cycles may be performed while maintaining valid data at the output pin. This feature is referred to as Hidden Refresh. Hidden Refresh is performed by holding $\overline{CAS}$ at V_{IL} and taking $\overline{RAS}$ high and after a specified precharge period (t_{RP}), executing a "$\overline{RAS}$-Only" refresh cycle, but with $\overline{CAS}$ held low (see Figure 1.)

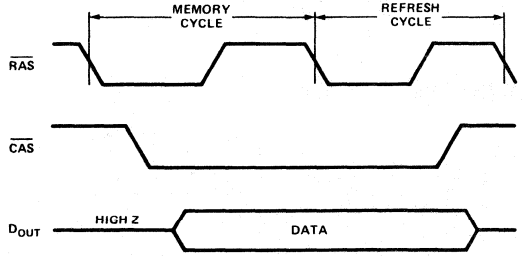

Figure 1. Hidden Refresh Cycle.

This feature allows a refresh cycle to be "hidden" among data cycles without affecting the data availability.

POWER ON

After the application of the V_{DD} supply, or after extended periods of bias (greater than 2ms) without clocks, the device must perform a minimum of eight (8) initialization cycles (any combination of cycles containing a $\overline{RAS}$ clock such as $\overline{RAS}$-only refresh) prior to normal operation.

The V_{DD} current (I_{DD}) requirement of the 2118 during power on is, however, dependent upon the input levels of $\overline{RAS}$ and $\overline{CAS}$. If the input levels of these clocks are at V_{IH} or V_{DD}, whichever is lower, the I_{DD} requirement per device is I_{DD1} (I_{DD} standby). If the input levels for these clocks are lower than V_{IH} or V_{DD} the I_{DD} requirement will be greater than I_{DD1}, as shown in Figure 2.

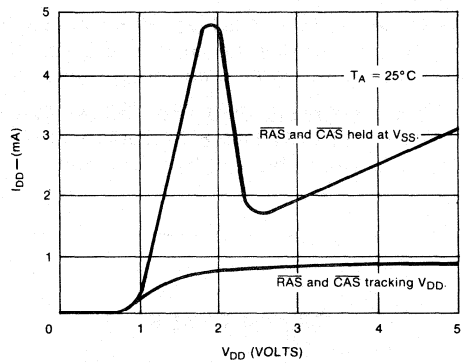

Figure 2. Typical I_{DD} VS V_{DD} during power up.

For large systems, this current requirement for IDD could be substantially more than that for which the system has been designed. A system which has been designed, assuming the majority of devices to be operating in the refresh/standby mode, may produce sufficient I_{DD} loading such that the power supply may current limit. To assure that the system will not experience such loading during power on, a pullup resistor for each clock input to V_{DD} to maintain the non-selected current level (I_{DD1}) for the power supply is recommended.

2128
2048 x 8-BIT STATIC RAM

	2128-15	2128-20
Max. Access Time (ns)	150	200
Max. Active Current (mA)	120	120
Max. Standby Current (mA)	30	30

- **Fully Static Operation; No Clocks, Refresh or Latches**
- **EPROM Compatible Pinout**
- **Industry Standard 24-Pin Package**
- **Two Line Control, $\overline{CE}$ Controls Power-Down, $\overline{OE}$ Controls Output Buffers — Eliminates Bus Contention**
- **150 ns Maximum Access Time**
- **Auto Power-Down**

The Intel® 2K x 8 is a 16,384-bit static RAM organized as 2048 words by 8 bits. It employs fully static circuitry which eliminates the need for clocks, refresh, or address setup and hold times. The auto power-down feature cuts power consumption when the device is disabled.

The 24-pin industry standard pinout allows easy upgrades to 4K x 8 static RAMs and compatibility to the 2732 4K x 8 and 2764 8K x 8 EPROMs in 28-pin sites. The two line control simplifies decoding and eliminates any possibility of bus contention.

TRUTH TABLE

$\overline{CE}$	$\overline{WE}$	$\overline{OE}$	MODE	OUTPUT	POWER
H	X	X	NOT SELECTED	HIGH Z	STANDBY
L	H	H	SELECTED	HIGH Z	ACTIVE
L	H	L	READ	ACTIVE	ACTIVE
L	L	X	WRITE	HIGH Z	ACTIVE

PIN NAMES

A_0-A_{11}	ADDRESS INPUTS
$\overline{CE}$	CHIP ENABLE
$\overline{OE}$	OUTPUT ENABLE
$\overline{WE}$	WRITE ENABLE
D_0-D_7	DATA INPUT/OUTPUT
V_{CC}	POWER (+5V)
GND	GROUND

LOGIC SYMBOL 2K x 8 SRAM

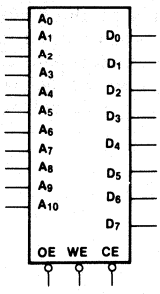

COMPATIBLE PINOUTS

EPROM	SRAM		
8K x 8	8K x 8	4K x 8	2K x 8
V_{PP}	NC	NC	
A_{12}	A_{12}	NC	
A_7	A_7	A_7	A_7
A_6	A_6	A_6	A_6
A_5	A_5	A_5	A_5
A_4	A_4	A_4	A_4
A_3	A_3	A_3	A_3
A_2	A_2	A_2	A_2
A_1	A_1	A_1	A_1
A_0	A_0	A_0	A_0
D_0	D_0	D_0	D_0
D_1	D_1	D_1	D_1
D_2	D_2	D_2	D_2
GND	GND	GND	GND

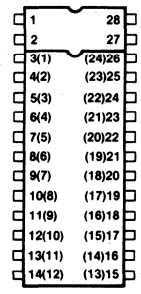

SRAM			EPROM
2K x 8	4K x 8	8K x 8	8K x 8
	V_{CC}	V_{CC}	V_{CC}
	$\overline{WE}$	$\overline{WE}$	$\overline{PGM}$
V_{CC}	NC	NC	NC
A_8	A_8	A_8	A_8
A_9	A_9	A_9	A_9
$\overline{WE}$	A_{11}	A_{11}	A_{11}
$\overline{OE}$	$\overline{OE}$	$\overline{OE}$	$\overline{OE}$
A_{10}	A_{10}	A_{10}	A_{10}
$\overline{CE}$	$\overline{CE}$	$\overline{CE}$	$\overline{CE}$
D_7	D_7	D_7	D_7
D_6	D_6	D_6	D_6
D_5	D_5	D_5	D_5
D_4	D_4	D_4	D_4
D_3	D_3	D_3	D_3

Intel Corporation assumes no responsibility for the use of any circuitry other than circuitry embodied in an Intel product. No other circuit patent licenses are implied.
© INTEL CORPORATION, 1980
January 1981
AFN-2K x 8ADS

ABSOLUTE MAXIMUM RATINGS*

Temperature Under Bias . . . . . – 10°C to + 80°C
Storage Temperature . . . . . – 65°C to + 150°C
Voltage on Any Pin With
Respect to Ground . . . . . – 3.5V to + 7V
Power Dissipation 1.0W
D.C. Output Current . . . . . 10 mA

*NOTICE: Stresses above those listed under "Absolute Maximum Ratings" may cause permanent damage to the device. This is a stress rating only and functional operation of the device at these or any other conditions above those indicated in the operational sections of this specification is not implied. Exposure to absolute maximum rating conditions for extended periods may affect device reliability.

D.C. AND OPERATING CHARACTERISTICS

$T_A = 0°C$ to $70°C$, $V_{CC} = 5V \pm 10\%$, unless otherwise noted.

Symbol	Parameter	2128-15/20			Unit	Test Conditions
		Min.	Typ.[1]	Max.		
I_{LI}	Input Load Current (All Input Pins)			10	μA	$V_{IN} = 0$ to 5.5V
$\|I_{LO}\|$	Leakage Current			10	μA	$\overline{CE} = V_{IH}$, V_D = GND to V_{CC}
I_{CC}	Power Supply Current (Active)			120	mA	V_{CC} = Max., $I_{I/O} = 0$ μA, $T_A = 0°C$, $\overline{CE} = V_{IL}$
I_{SB}	Power Supply Current (Standby)			30	mA	V_{CC} = Max., $I_{I/O} = 0$ mA, $T_A = 0°C$, $\overline{CE} = V_{IH}$
V_{IL}	Input Low Voltage	– 3.0		0.8	V	
V_{IH}	Input High Voltage	2.0		6.0	V	
I_{OL}	Output Low Current	4.0			mA	$V_{OL} = 0.4V$
I_{OH}	Output High Current	2.0			mA	$V_{OH} = 2.4V$

A.C. CONDITIONS OF TEST

Input Pulse Levels . . . . . 0.8V to 2.0V
Input Rise and Fall Times . . . . . 5 ns
Input Timing Levels 1.5V
Output Timing Levels . . . . . 0.4V to 2.4V
Output Load . . . . . 2 TTL Gate and $C_L = 100$ pF
(See Loads A & B)

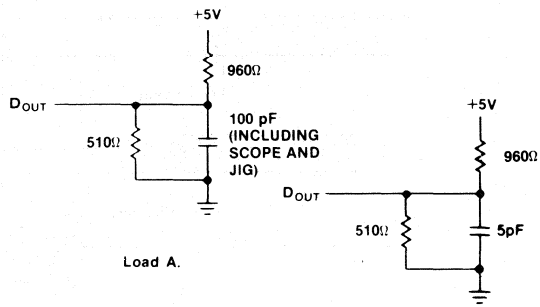

CAPACITANCE

$T_A = 25°C$, f = 1.0 MHz

Symbol	Parameter	Max.	Unit	Test Conditions
C_{OUT}	Output Capacitance	5	pF	V = 0V
C_{IN}	Input Capacitance	5	pF	$V_{IN} = 0V$

NOTE:
This parameter is periodically sampled and not 100% tested.

A.C. CHARACTERISTICS

$T_A = 0°C$ to $70°C$, $V_{CC} = 5V \pm 10\%$

READ CYCLE

Symbol	Parameter	2128-15		2128-20		Unit
		Min.	Max.	Min.	Max.	
t_{RC}	Read Cycle Time	150	—	200	—	ns
t_{ACC}	Address Access Time	—	150	—	200	ns
t_{CE}	Chip Select Access Time	—	150	—	200	ns
t_{OE}	Output Enable Time	—	50	—	65	ns
t_{OH}	Output Hold Time from Address Change, $\overline{CE}$, $\overline{OE}$	0	—	0	—	ns
t_{CLZ}	Output in Low Z from $\overline{CE}$	0	—	0	—	ns
t_{CHZ}	Output in High Z from $\overline{CE}$	—	50	—	65	ns
t_{OLZ}	Output in Low Z from $\overline{OE}$	0	—	0	—	ns
t_{OHZ}	Output in High Z from $\overline{OE}$	—	50	—	65	ns

TIMING WAVEFORMS

READ CYCLE

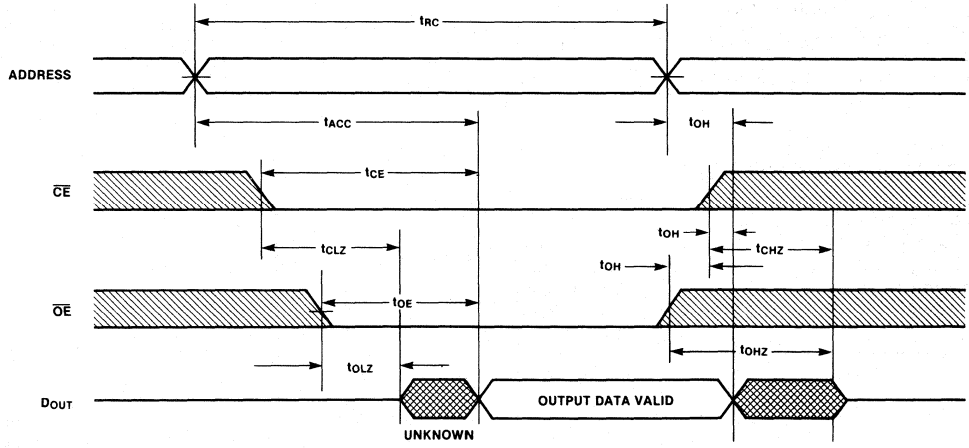

NOTE: READ CYCLE
1. $\overline{WE}$ is high for Read Cycle.

A.C. CHARACTERISTICS (Continued)

$T_A = 0°C$ to $70°C$, $V_{CC} = 5V \pm 10\%$

WRITE CYCLE

Symbol	Parameter	2128-15		2128-20		Unit
		Min.	Max.	Min.	Max.	
t_{WC}	Write Cycle Time	150	—	200	—	ns
t_{CW}	Chip Selection to End of Write	150	—	200	—	ns
t_{AS}	Address Setup Time	0	—	0	—	ns
t_{WP}	Write Pulse Width	75	—	100	—	ns
t_{AW}	Address Valid to End of Write	150	—	200	—	ns
t_{WR}	Write Recovery Time	0	—	0	—	ns
t_{DS}	Data Setup Time	50	—	65	—	ns
t_{DH}	Data Hold Time	0	—	0	—	ns
t_{WLZ}[3]	Output in Low Z from $\overline{WE}$ High	0	—	0	—	ns
t_{WHZ}	Output in High Z from $\overline{WE}$ Low	—	50	—	65	ns

WRITE CYCLE

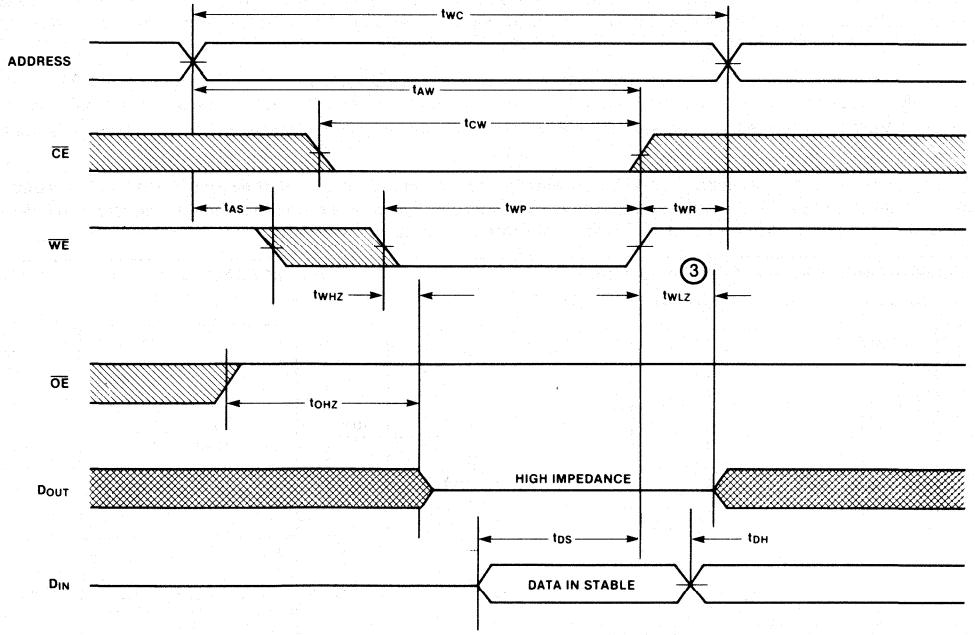

NOTES: WRITE CYCLE
1. Write may be terminated by either $\overline{CE}$ or $\overline{WE}$.
2. Output in High Z will occur from $\overline{WE}$ low or $\overline{OE}$ high or $\overline{CE}$ high, whichever is first.
3. If $\overline{OE}$ is high, t_{WLZ} is invalid — D_{OUT} remains in the high impedance state.

2141
4096 X 1 BIT STATIC RAM

	2141-2	2141-3	2141-4	2141-5	2141L-3	2141L-4	2141L-5
Max. Access Time (ns)	120	150	200	250	150	200	250
Max. Active Current (mA)	70	70	55	55	40	40	40
Max. Standby Current (mA)	20	20	12	12	5	5	5

- **HMOS Technology**
- **Industry Standard 2147 Pinout**
- **Completely Static Memory — No Clock or Timing Strobe Required**
- **Equal Access and Cycle Times**
- **Single +5V Supply**
- **Automatic Power-Down**
- **Directly TTL Compatible — All Inputs and Output**
- **Separate Data Input and Output**
- **Three-State Output**
- **High Density 18-Pin Package**

The Intel® 2141 is a 4096-bit static Random Access Memory organized as 4096 words by 1-bit using HMOS, a high-performance MOS technology. It uses a uniquely innovative design approach which provides the ease-of-use features associated with non-clocked static memories and the reduced standby power dissipation associated with clocked static memories. To the user this means low standby power dissipation without the need for clocks, address setup and hold times, nor reduced data rates due to cycle times that are longer than access times.

$\overline{CS}$ controls the power-down feature. In less than a cycle time after $\overline{CS}$ goes high — deselecting the 2141 — the part automatically reduces its power requirements and remains in this low power standby mode as long as $\overline{CS}$ remains high. This device feature results in system power savings as great as 85% in larger systems, where the majority of devices are de-selected.

The 2141 is placed in an 18-pin package configured with the industry standard pinout, the same as the 2147. It is directly TTL compatible in all respects: inputs, output, and a single +5V supply. The data is read out nondestructively and has the same polarity as the input data. A data input and a separate three-state output are used.

PIN CONFIGURATION

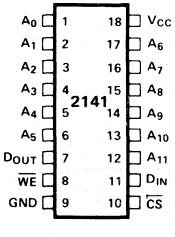

LOGIC SYMBOL

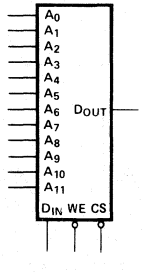

BLOCK DIAGRAM

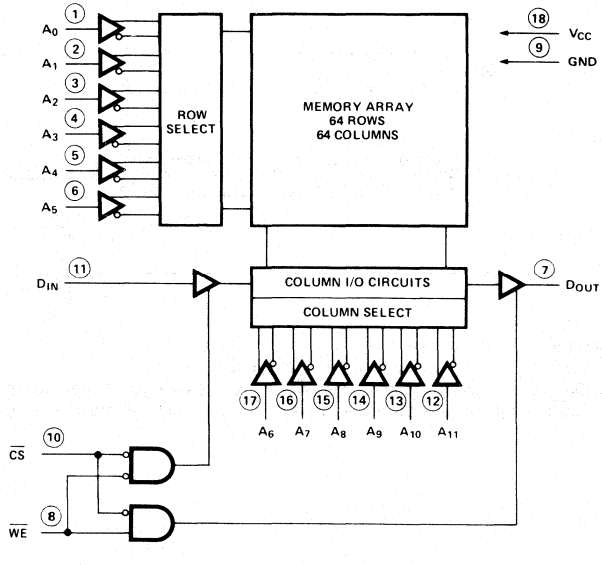

PIN NAMES

A_0–A_{11}	ADDRESS INPUTS	V_{CC}	POWER (+5V)
$\overline{WE}$	WRITE ENABLE	GND	GROUND
$\overline{CS}$	CHIP SELECT		
D_{IN}	DATA INPUT		
D_{OUT}	DATA OUTPUT		

TRUTH TABLE

$\overline{CS}$	$\overline{WE}$	MODE	OUTPUT	POWER
H	X	NOT SELECTED	HIGH Z	STANDBY
L	L	WRITE	HIGH Z	ACTIVE
L	H	READ	D_{OUT}	ACTIVE

ABSOLUTE MAXIMUM RATINGS*

Temperature Under Bias ..... -10°C to 85°C
Storage Temperature ..... -65°C to +150°C
Voltage on Any Pin With
Respect to Ground ..... -1.5V to +7V
Power Dissipation 1.2W
D.C. Output Current 20mA

COMMENT: Stresses above those listed under "Absolute Maximum Ratings" may cause permanent damage to the device. This is a stress rating only and functional operation of the device at these or any other conditions above those indicated in the operational sections of this specification is not implied. Exposure to absolute maximum rating conditions for extended periods may affect device reliability.

D.C. AND OPERATING CHARACTERISTICS

T_A = 0°C to 70°C, V_{CC} = +5V ±10% unless otherwise noted.

Symbol	Parameter	2141-2/-3 Min.	2141-2/-3 Typ.[1]	2141-2/-3 Max.	2141-4/-5 Min.	2141-4/-5 Typ.[1]	2141-4/-5 Max.	2141L-3/L-4/L-5 Min.	2141L-3/L-4/L-5 Typ.[1]	2141L-3/L-4/L-5 Max.	Unit	Conditions
$\|I_{LI}\|$	Input Load Current (All Input Pins)		0.01	10		0.01	10		0.01	10	µA	V_{CC}=Max., V_{IN}= GND to V_{CC}
$\|I_{LO}\|$	Output Leakage Current		0.1	10		0.1	10		0.1	10	µA	$\overline{CS}$=V_{IH}, V_{CC}=Max., V_{OUT}=GND to 4.5V
I_{CC}	Operating Current		45	70		40	55		30	40	mA	V_{CC}=Max., $\overline{CS}$=V_{IL}, Outputs Open
I_{SB}	Standby Current			20			12			5	mA	V_{CC}=Min. to Max., $\overline{CS}$=V_{IH}
I_{PO}[2]	Peak Power-On Current			40			30			18	mA	V_{CC}=GND to V_{CC} Min. $\overline{CS}$=Lower of V_{CC} or V_{IH} Min.
V_{IL}	Input Low Voltage	-1.0		0.8	-1.0		0.8	-1.0		0.8	V	
V_{IH}	Input High Voltage	2.0		6.0	2.0		6.0	2.0		6.0	V	
V_{OL}	Output Low Voltage			0.4			0.4			0.4	V	I_{OL} = 8.0mA
V_{OH}	Output High Voltage	2.4			2.4			2.4			V	I_{OH} = -4.0mA
I_{OS}[3]	Output Short Circuit Current	-120		120	-120		120	-120		120	mA	V_{OUT}=GND to V_{CC}

Notes: 1. Typical limits are at V_{CC} = 5V, T_A = +25°C, and specified loading.
2. I_{CC} exceeds I_{SB} maximum during power-on, as shown in Graph 7. A pull-up resistor to V_{CC} on the $\overline{CS}$ input is required to keep the device deselected; otherwise, power-on current approaches I_{CC} active.
3. Duration not to exceed one minute.

A.C. TEST CONDITIONS

Input Pulse Levels	GND to 3.5 Volts
Input Rise and Fall Times	10 nsec
Input and Output Timing Reference Levels	1.5 Volts
Output Load	1 TTL Load plus 100pF

CAPACITANCE [4]

T_A = 25°C, f = 1.0MHz

Symbol	Parameter	Max.	Unit	Conditions
C_{IN}	Input Capacitance	5	pF	V_{IN} = 0V
C_{OUT}	Output Capacitance	6	pF	V_{OUT} = 0V

Note 4. This parameter is sampled and not 100% tested.

A.C. CHARACTERISTICS

T_A = 0°C to 70°C, V_{CC} = +5V±10%, unless otherwise noted.

READ CYCLE

Symbol	Parameter	2141-2 Min.	2141-2 Max.	2141-3/L-3 Min.	2141-3/L-3 Max.	2141-4/L-4 Min.	2141-4/L-4 Max.	2141-5/L-5 Min.	2141-5/L-5 Max.	Unit
t_{RC}	Read Cycle Time	120		150		200		250		ns
t_{AA}	Address Access Time		120		150		200		250	ns
t_{ACS1}[1]	Chip Select Access Time		120		150		200		250	ns
t_{ACS2}[2]	Chip Select Access Time		130		160		200		250	ns
t_{OH}	Output Hold from Address Change	10		10		10		10		ns
t_{LZ}[3]	Chip Selection to Output in Low Z	30		30		30		30		ns
t_{HZ}[3]	Chip Deselection to Output in High Z	0	60	0	60	0	60	0	60	ns
t_{PU}	Chip Selection to Power Up Time	0		0		0		0		ns
t_{PD}	Chip Deselection to Power Down Time		60		60		60		60	ns

WAVEFORMS

READ CYCLE NO. 1 [4,5]

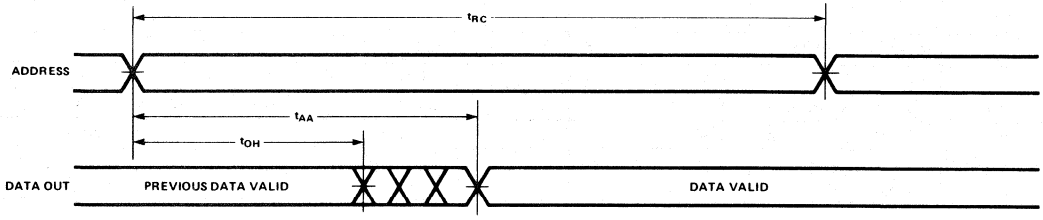

READ CYCLE NO. 2 [4,6]

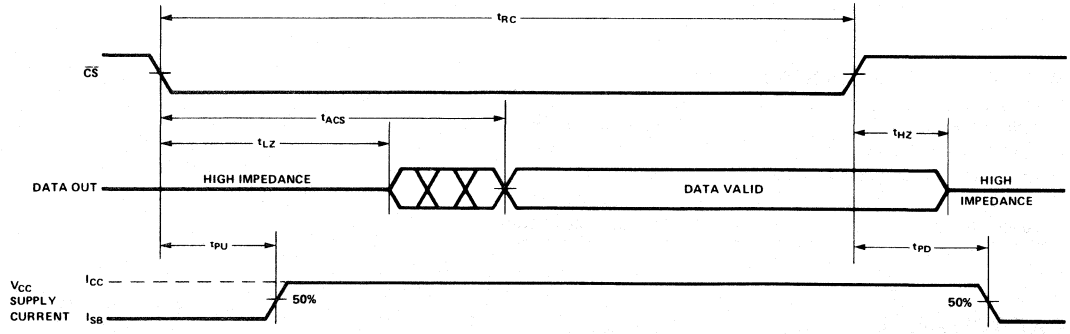

Notes:

1. Chip deselected for greater than 55ns prior to selection.
2. Chip deselected for a finite time that is less than 55ns prior to selection. (If the deselect time is 0ns, the chip is by definition selected and access occurs according to Read Cycle No. 1.)
3. At any given temperature and voltage condition, t_{HZ} max is less than t_{LZ} min both for a given device and from device to device.
4. $\overline{WE}$ is high for Read Cycles.
5. Device is continuously selected, $\overline{CS}$ = V_{IL}.
6. Addresses valid prior to or coincident with $\overline{CS}$ transition low.

A.C. CHARACTERISTICS T_A = 0°C to 70°C, V_{CC} = +5V±10%, unless otherwise noted.

WRITE CYCLE

Symbol	Parameter	2141-2 Min.	2141-2 Max.	2141-3/L-3 Min.	2141-3/L-3 Max.	2141-4/L-4 Min.	2141-4/L-4 Max.	2141-5/L-5 Min.	2141-5/L-5 Max.	Unit
t_{WC}	Write Cycle Time	120		150		200		250		ns
t_{CW}	Chip Selection to End of Write	110		135		180		230		ns
t_{AW}	Address Valid to End of Write	110		135		180		230		ns
t_{AS}	Address Setup Time	0		0		0		0		ns
t_{WP}	Write Pulse Width	60		60		60		75		ns
t_{WR}	Write Recovery Time	10		15		20		20		ns
t_{DW}	Data Valid to End of Write	50		60		60		75		ns
t_{DH}	Data Hold Time	5		5		5		5		ns
t_{WZ}	Write Enabled to Output in High Z	10	70	10	80	10	80	10	80	ns
t_{OW}	Output Active from End of Write	5		5		5		5		ns

WAVEFORMS

WRITE CYCLE #1 ($\overline{WE}$ CONTROLLED)

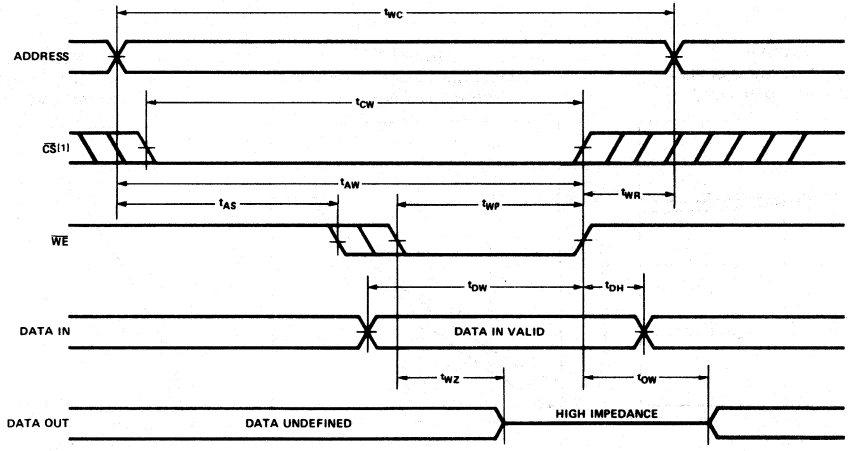

WRITE CYCLE #2 ($\overline{CS}$ CONTROLLED)

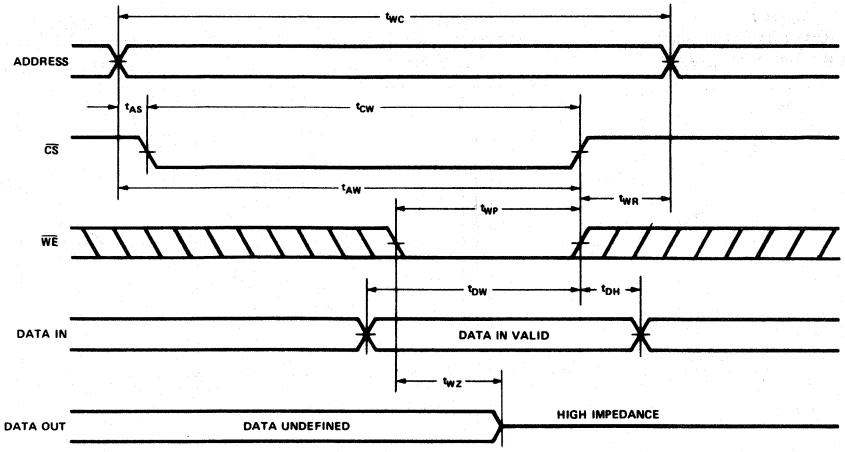

Note: 1. If $\overline{CS}$ goes high simultaneously with $\overline{WE}$ high, the output remains in a high impedance state.

TYPICAL D.C. AND A.C. CHARACTERISTICS

GRAPH 1
SUPPLY CURRENT VS.
SUPPLY VOLTAGE

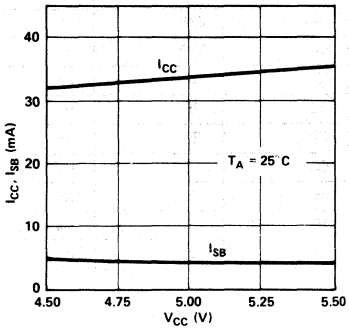

GRAPH 2
SUPPLY CURRENT VS.
AMBIENT TEMPERATURE

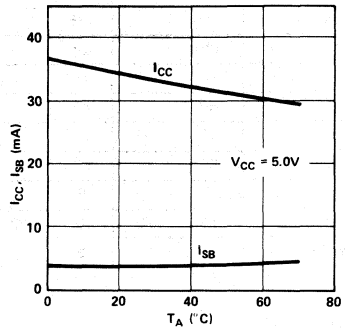

GRAPH 3
OUTPUT SOURCE CURRENT VS.
OUTPUT VOLTAGE

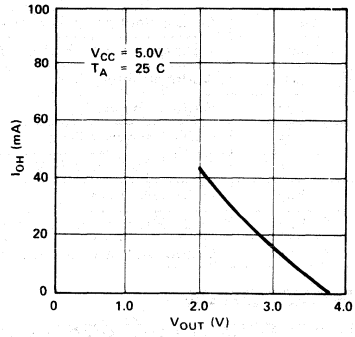

GRAPH 4
NORMALIZED ACCESS TIME
VS. SUPPLY VOLTAGE

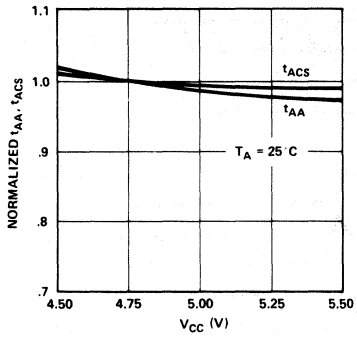

GRAPH 5
NORMALIZED ACCESS TIME VS.
AMBIENT TEMPERATURE

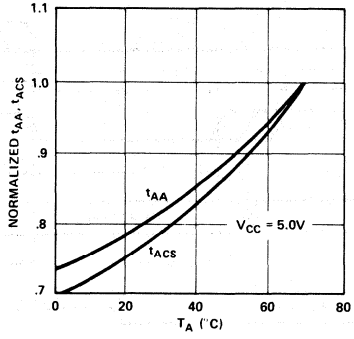

GRAPH 6
OUTPUT SINK CURRENT VS.
OUTPUT VOLTAGE

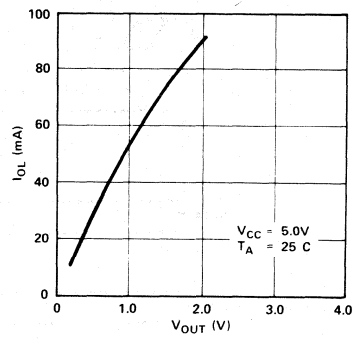

GRAPH 7
TYPICAL POWER-ON CURRENT
VS. POWER SUPPLY VOLTAGE

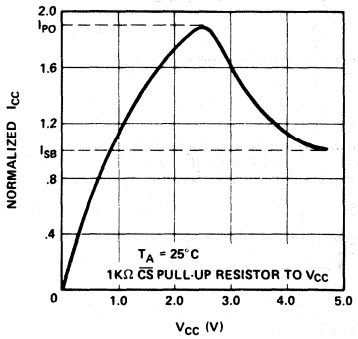

GRAPH 8
ACCESS TIME CHANGE VS.
INPUT VOLTAGE

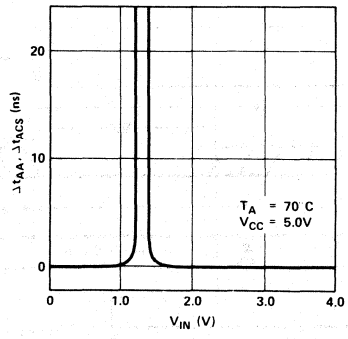

GRAPH 9
ACCESS TIME CHANGE VS.
OUTPUT LOADING

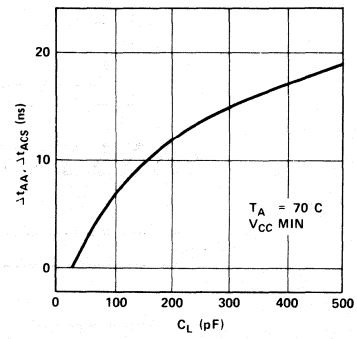

DEVICE DESCRIPTION

The 2141 is produced with HMOS, a new high-performance MOS technology which incorporates on-chip substrate bias generation to achieve high-performance. This process, combined with new design ideas, gives the 2141 its unique features. Both low power and ease-of-use have been obtained in a single part. The low-power feature is controlled with the Chip Select input, which is not a clock and does not have to be cycled. Multiple read or write operations are possible during a single select period. Access times are equal to cycle times, resulting in data rates up to 8.3 MHz for the 2141-2. This is considerably higher performance than for clocked static designs.

Whenever the 2141 is deselected, it automatically reduces its power requirements to a fraction of the active power, as shown in Figure 1. This is achieved by switching off the power to unnecessary portions of the internal peripheral circuitry. This feature adds up to significant system power savings. The average power per device declines as system size grows because a continually higher portion of the memory is deselected. Device power dissipation asymptotically approaches the standby power level, as shown in Figure 2.

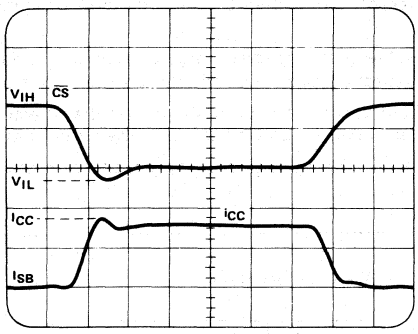

FIGURE 1. i_{CC} WAVEFORM.

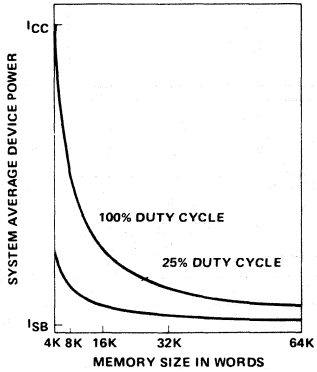

FIGURE 2. AVERAGE DEVICE DISSIPATION VS. MEMORY SIZE.

There is no functional constraint on the amount of time the 2141 is deselected. However, there is a relationship between deselect time and Chip Select access time. With no compensation, the automatic power switch would cause an increase in Chip Select access time, since some time is lost in repowering the device upon selection. A feature of the 2141 design is its ability to compensate for this loss. The amount of compensation is a function of deselect time, as shown in Figure 3. For short deselect times, Chip Select access time becomes slower than address access time, since full compensation typically requires 60ns. For longer deselect times, Chip Select access time actually becomes faster than address access time because the compensation more than offsets the time lost in powering up. The spec accounts for this characteristic by specifying two Chip Select access times, t_{ACS1} and t_{ACS2}.

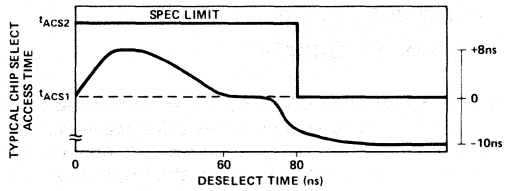

FIGURE 3. t_{ACS} VS. DESELECT TIME.

The power switching characteristic of the 2141 requires more careful decoupling than would be required of a constant power device. It is recommended that a 0.1μF ceramic capacitor be used on every other device, with a 22μF to 47μF bulk electrolytic decoupler every 32 devices. The actual values to be used will depend on board layout, trace widths and duty cycle. Power supply gridding is recommended for PC board layout. A very satisfactory grid can be developed on a two-layer board with vertical traces on one side and horizontal traces on the other, as shown in Figure 4.

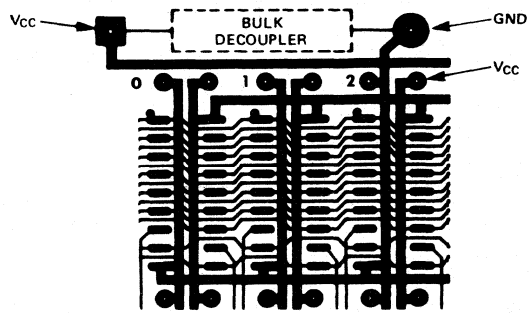

FIGURE 4. PC LAYOUT.

2142
1024 X 4 BIT STATIC RAM

	2142-2	2142-3	2142	2142L3	2142L
Max. Access Time (ns)	200	300	450	300	450
Max. Power Dissipation (mw)	525	525	525	370	370

- **High Density 20 Pin Package**
- **Access Time Selections From 200-450ns**
- **Identical Cycle and Access Times**
- **Low Operating Power Dissipation .1mW/Bit Typical**
- **Single +5V Supply**
- **No Clock or Timing Strobe Required**
- **Completely Static Memory**
- **Directly TTL Compatible: All Inputs and Outputs**
- **Common Data Input and Output Using Three-State Outputs**

The Intel® 2142 is a 4096-bit static Random Access Memory organized as 1024 words by 4-bits using N-channel Silicon-Gate MOS technology. It uses fully DC stable (static) circuitry throughout — in both the array and the decoding — and therefore requires no clocks or refreshing to operate. Data access is particularly simple since address setup times are not required. The data is read out nondestructively and has the same polarity as the input data. Common input/output pins are provided.

The 2142 is designed for memory applications where high performance, low cost, large bit storage, and simple interfacing are important design objectives. It is directly TTL compatible in all respects: inputs, outputs, and a single +5V supply.

The 2142 is placed in a 20-pin package. Two Chip Selects ($\overline{CS}_1$ and CS_2) are provided for easy and flexible selection of individual packages when outputs are OR-tied. An Output Disable is included for direct control of the output buffers.

The 2142 is fabricated with Intel's N-channel Silicon-Gate technology — a technology providing excellent protection against contamination permitting the use of low cost plastic packaging.

PIN CONFIGURATION

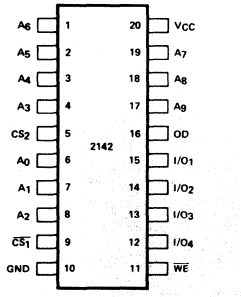

LOGIC SYMBOL

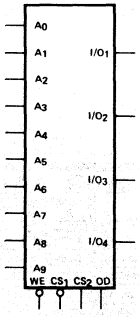

BLOCK DIAGRAM

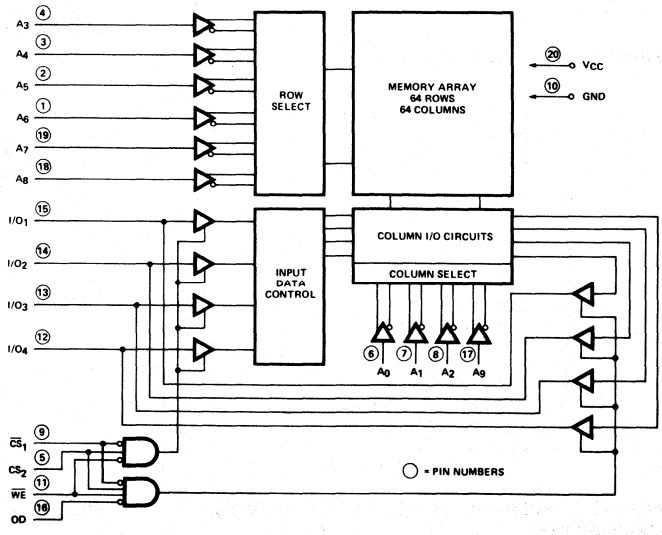

PIN NAMES

A_0–A_9	ADDRESS INPUTS	OD	OUTPUT DISABLE
$\overline{WE}$	WRITE ENABLE	V_{CC}	POWER (+5V)
$\overline{CS}_1$, CS_2	CHIP SELECT	GND	GROUND
I/O_1–I/O_4	DATA INPUT/OUTPUT		

ABSOLUTE MAXIMUM RATINGS*

Temperature Under Bias ..... -10°C to 80°C
Storage Temperature ..... -65°C to +150°C
Voltage on Any Pin
With Respect to Ground ..... -0.5V to +7V
Power Dissipation 1.0W
D.C. Output Current 10mA

COMMENT: Stresses above those listed under "Absolute Maximum Ratings" may cause permanent damage to the device. This is a stress rating only and functional operation of the device at these or any other conditions above those indicated in the operational sections of the specification is not implied. Exposure to absolute maximum rating conditions for extended periods may affect device reliability.

D.C. AND OPERATING CHARACTERISTICS

T_A = 0°C to 70°C, V_{CC} = 5V ± 5%, unless otherwise noted.

SYMBOL	PARAMETER	2142-2, 2142-3, 2142 Min.	Typ.[1]	Max.	2142L3, 2142L Min.	Typ.[1]	Max.	UNIT	CONDITIONS
$\|I_{LI}\|$	Input Load Current (All Input Pins)			10			10	µA	V_{IN} = 0 to 5.25V
$\|I_{LO}\|$	I/O Leakage Current			10			10	µA	$\overline{CS}$ = 2.4V, $V_{I/O}$ = 0.4V to V_{CC}
I_{CC1}	Power Supply Current		80	95			65	mA	V_{IN} = 5.25V, $I_{I/O}$ = 0 mA, T_A = 25°C
I_{CC2}	Power Supply Current			100			70	mA	V_{IN} = 5.25V, $I_{I/O}$ = 0 mA, T_A = 0°C
V_{IL}	Input Low Voltage	-0.5		0.8	-0.5		0.8	V	
V_{IH}	Input High Voltage	2.0		6.0	2.0		6.0	V	
I_{OL}	Output Low Current	2.1	6.0		2.1	6.0		mA	V_{OL} = 0.4V
I_{OH}	Output High Current	-1.0	-1.4		-1.0	-1.4		mA	V_{OH} = 2.4V
I_{OS}[2]	Output Short Circuit Current			60			60	mA	V_{OUT} = V_{CC} to GND

NOTE: 1. Typical values are for T_A = 25°C and V_{CC} = 5.0V.
2. Duration not to exceed 30 seconds.

CAPACITANCE

T_A = 25°C, f = 1.0 MHz

SYMBOL	TEST	MAX	UNIT	CONDITIONS
$C_{I/O}$	Input/Output Capacitance	5	pF	$V_{I/O}$ = OV
C_{IN}	Input Capacitance	5	pF	V_{IN} = OV

NOTE: This parameter is periodically sampled and not 100% tested.

A.C. CONDITIONS OF TEST

Input Pulse Levels ..... 0.8 Volt to 2.4 Volt
Input Rise and Fall Times ..... 10 nsec
Input and Output Timing Levels ..... 1.5 Volts
Output Load ..... 1 TTL Gate and C_L = 100 pF

A.C. CHARACTERISTICS T_A = 0°C to 70°C, V_{CC} = 5V ± 5%, unless otherwise noted.

READ CYCLE [1]

SYMBOL	PARAMETER	2142-2 Min.	2142-2 Max.	2142-3, 2142L3 Min.	2142-3, 2142L3 Max.	2142, 2142L Min.	2142, 2142L Max.	UNIT
t_{RC}	Read Cycle Time	200		300		450		ns
t_A	Access Time		200		300		450	ns
t_{OD}	Output Enable to Output Valid		70		100		120	ns
t_{ODX}	Output Enable to Output Active	20		20		20		ns
t_{CO}	Chip Selection to Output Valid		70		100		120	ns
t_{CX}	Chip Selection to Output Active	20		20		20		ns
t_{OTD}	Output 3-state from Disable		60		80		100	ns
t_{OHA}	Output Hold from Address Change	50		50		50		ns

WRITE CYCLE [2]

SYMBOL	PARAMETER	2142-2 Min.	2142-2 Max.	2142-3, 2142L3 Min.	2142-3, 2142L3 Max.	2142, 2142L Min.	2142, 2142L Max.	UNIT
t_{WC}	Write Cycle Time	200		300		450		ns
t_W	Write Time	120		150		200		ns
t_{WR}	Write Release Time	0		0		0		ns
t_{OTD}	Output 3-state from Disable		60		80		100	ns
t_{DW}	Data to Write Time Overlap	120		150		200		ns
t_{DH}	Data Hold From Write Time	0		0		0		ns

NOTES:
1. A Read occurs during the overlap of a low $\overline{CS}$ and a high $\overline{WE}$.
2. A Write occurs during the overlap of a low $\overline{CS}$ and a low $\overline{WE}$.

WAVEFORMS

READ CYCLE ③

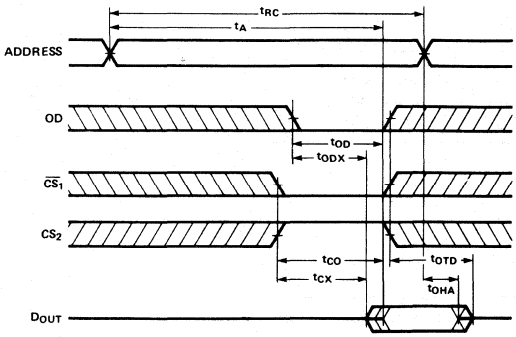

WRITE CYCLE

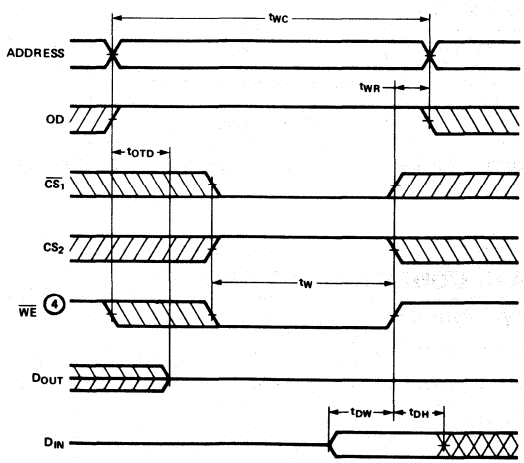

NOTES:
3. $\overline{WE}$ is high for a Read Cycle.
4. $\overline{WE}$ must be high during all address transitions.

TYPICAL D.C. AND A.C. CHARACTERISTICS

NORMALIZED ACCESS TIME VS. SUPPLY VOLTAGE

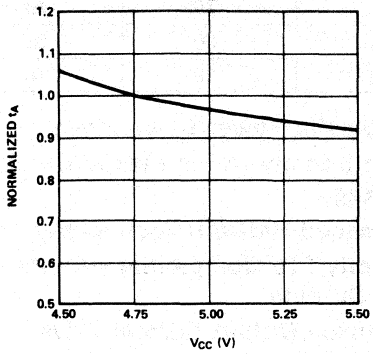

NORMALIZED ACCESS TIME VS. AMBIENT TEMPERATURE

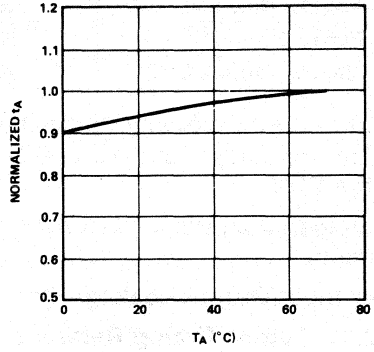

NORMALIZED ACCESS TIME VS. OUTPUT LOAD CAPACITANCE

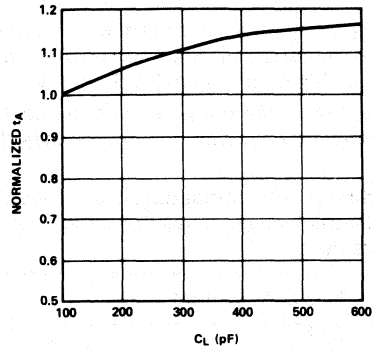

NORMALIZED POWER SUPPLY CURRENT VS. AMBIENT TEMPERATURE

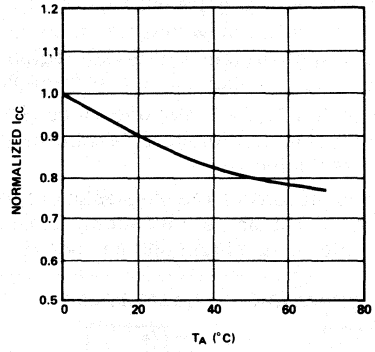

OUTPUT SOURCE CURRENT VS. OUTPUT VOLTAGE

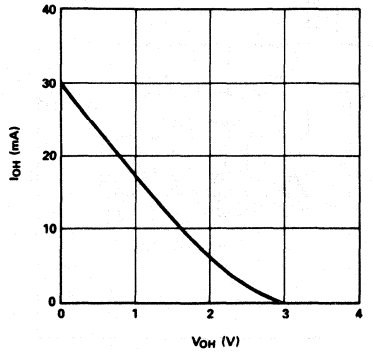

OUTPUT SINK CURRENT VS. OUTPUT VOLTAGE

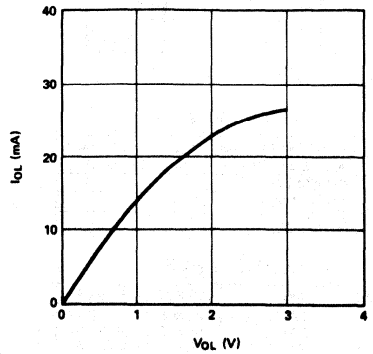

PRELIMINARY

2147A
HIGH SPEED 4096 x 1 BIT STATIC RAM

	2147A-3	2147AL-3	2147A	2147AL
Max. Access Time (ns)	55	55	70	70
Max. Active Current (mA)	50	35	50	35
Max. Standby Current (mA)	20	12	20	10

- **Pinout and Functionally Compatible with the Industry Standard 2147H and the 6147**
- **Low Power Operation - 275 mW Maximum**
- **Lower Input/Output Leakage Current**
- **0.8-2.0V Output Timing Reference Level**
- **Automatic Power Down Mode**
- **High Density 18-Pin Plastic/Cerdip Package**
- **Advanced HMOS-II Technology**
- **Directly TTL Compatible—All Inputs and Outputs**
- **Improved Output Current Drive**
- **Three-State Output for Bus Interface**

The Intel 2147A is a 4096 words by 1 bit static RAM designed for low power dissipation of 275 mW maximum. The 2147A is fully compatible with the industry standard 2147H and is fabricated on Advanced HMOS-II, an evolution of HMOS-II technology - a production proven process for high reliability, high performance, and high storage density.

The 2147A is fully static which results in reduced overhead costs by elimination of refresh clocking circuitry and by simplification of timing requirements. When deselected, the 2147A automatically changes into a low power standby mode and maintains this state until the chip select signal, CS, is low.

Accordingly, the 2147A is suitable for use in applications such as instrumentation, telecommunications, caches, writeable control store, fast buffer memories and large memory systems in which a majority of units are deselected.

The 2147A is placed in an 18 pin plastic or cerdip package and is directly TTL compatible in all respects: inputs, output, and a single +5V supply. The data is read out nondestructively and has the same polarity as the input data. A data input and a separate three state output are used.

PIN CONFIGURATION

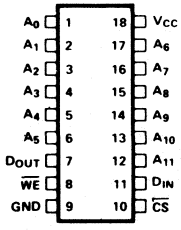

LOGIC SYMBOL

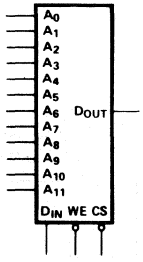

PIN NAMES

A_0–A_{11}	ADDRESS INPUTS	V_{CC}	POWER (+5V)
$\overline{WE}$	WRITE ENABLE	GND	GROUND
$\overline{CS}$	CHIP SELECT		
D_{IN}	DATA INPUT		
D_{OUT}	DATA OUTPUT		

TRUTH TABLE

$\overline{CS}$	$\overline{WE}$	MODE	OUTPUT	POWER
H	X	NOT SELECTED	HIGH Z	STANDBY
L	L	WRITE	HIGH Z	ACTIVE
L	H	READ	D_{OUT}	ACTIVE

BLOCK DIAGRAM

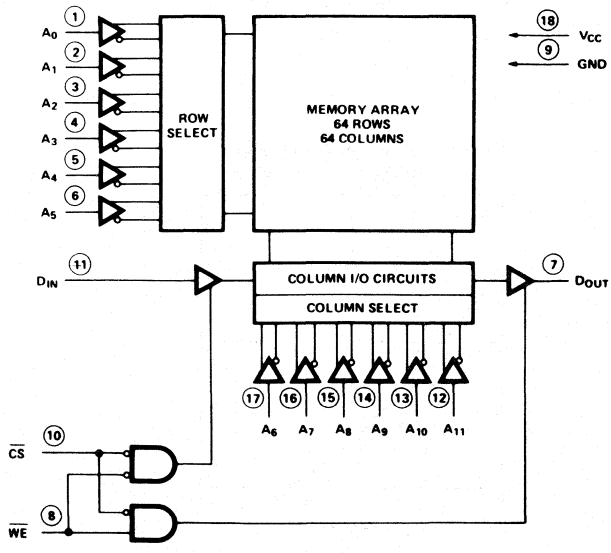

Intel Corporation assumes no responsibility for the use of any circuitry other than circuitry embodied in an Intel product. No other circuit patent licenses are implied.
© Intel Corporation, 1981

August, 1981

ABSOLUTE MAXIMUM RATINGS*

Temperature Under Bias ..... −10°C to 85°C
Storage Temperature ..... −65°C to +150°C
Voltage on Any Pin
With Respect to Ground ..... −3.5V to +7V
Power Dissipation 1.2W
D.C. Output Current ..... 20 mA

COMMENT: Stresses above those listed under "Absolute Maximum Ratings" may cause permanent damage to the device. This is a stress rating only and functional operation of the device at these or any other conditions above those indicated in the operational sections of this specification is not implied. Exposure to absolute maximum rating conditions for extended periods may affect device reliability.

D.C. AND OPERATING CHARACTERISTICS[1]

($T_A = 0°C$ to $70°C$, $V_{CC} = +5V \pm 10\%$, unless otherwise noted.)

Symbol	Parameter	2147A-3 Min.	2147A-3 Typ.	2147A-3 Max.	2147AL-3 Min.	2147AL-3 Typ.	2147AL-3 Max.	2147A Min.	2147A Typ.[2]	2147A Max.	2147AL Min.	2147AL Typ.[2]	2147AL Max.	Unit	Test Conditions
$\|I_{LI}\|$	Input Load Current (All Input Pins)			1			1			1			1	μA	V_{CC} = Max., V_{IN} = GND to V_{CC}
$\|I_{LO}\|$	Output Leakage Current			10			10			10			10	μA	$\overline{CS} = V_{IH}$, V_{CC} = Max., V_{OUT} = GND to 4.5V
I_{CC}	Operating Current			50			35			50			35	mA	V_{CC} = Max., $\overline{CS} = V_{IL}$, Outputs Open
I_{SB}	Standby Current			20			12			20			10	mA	V_{CC} = Min. to Max., $\overline{CS} = V_{IH}$
I_{PO}[3]	Peak Power-On Current			18			18			18			18	mA	V_{CC} = GND to V_{CC} Min., $\overline{CS}$ = Lower of V_{CC} or V_{IH} Min.
V_{IL}	Input Low Voltage	-3.0		0.8	-3.0		0.8	-3.0		0.8	-3.0		0.8	V	
V_{IH}	Input High Voltage	2.0		6.0	2.0		6.0	2.0		6.0	2.0		6.0	V	
V_{OL}	Output Low Voltage			0.4			0.4			0.4			0.4	V	I_{OL} = 12 mA
V_{OH}	Output High Voltage	2.4			2.4			2.4			2.4			V	I_{OH} = -8 mA
$\|I_{OS}\|$[4]	Output Short Circuit Current			275			275			275			275	mA	V_{OUT} = GND to V_{CC}

NOTES:
1. The operating ambient temperature range is guaranteed with transverse air flow exceeding 400 linear feet per minute. Typical thermal resistance values of the package at maximum temperatures are
   θ_{JA} (@ 400 f_{PM} air flow) = 40° C/W
   θ_{JA} (still air) = 70° C/W
   θ_{JC} = 25° C/W
2. Typical limits are at $V_{CC} = 5V$, $T_A = +25°C$, and specified loading.
3. A pull-up resistor to V_{CC} on the CS input is required to keep the device deselected; otherwise, power-on current approaches I_{CC} active.
4. Duration not to exceed 1 sec.

A.C. TEST CONDITIONS

Input Pulse Levels	GND to 3.0V
Input Rise and Fall Times	5 ns
Input Timing Reference Levels	1.5V
Output Timing Reference Levels	0.8-2.0V
Output Load	See Figure 1

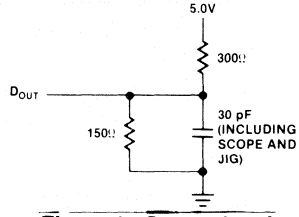

Figure 1. Output Load

CAPACITANCE[5] ($T_A = 25°C$, f = 1.0 MHz)

Symbol	Parameter	Max.	Unit	Conditions
C_{IN}	Input Capacitance	5	pF	V_{IN} = 0V
C_{OUT}	Output Capacitance	6	pF	V_{OUT} = 0V

NOTE:
5. This parameter is sampled and not 100% tested.

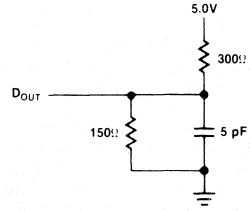

Figure 2. Output Load for t_{HZ}, t_{LZ}, t_{WZ}, t_{OW}

A.C. CHARACTERISTICS ($T_A = 0°C$ to $70°C$, $V_{CC} = +5V \pm 10\%$, unless otherwise noted.)

Read Cycle

Symbol	Parameter	2147A-3, 2147AL-3 Min.	2147A-3, 2147AL-3 Max.	2147A, 2147AL Min.	2147A, 2147AL Max.	Unit
t_{RC} [1]	Read Cycle Time	55		70		ns
t_{AA}	Address Access Time		55		70	ns
t_{ACS1} [8]	Chip Select Access Time		55		70	ns
t_{ACS2} [9]	Chip Select Access Time		65		80	ns
t_{OH}	Output Hold from Address Change	5		5		ns
t_{LZ} [2,3,7]	Chip Selection to Output in Low Z	10		10		ns
t_{HZ} [2,3,7]	Chip Deselection to Output in High Z	0	30	0	40	ns
t_{PU}	Chip Selection to Power Up Time	0		0		ns
t_{PD}	Chip Deselection to Power Down Time		20		30	ns

WAVEFORMS

Read Cycle No. 1[4,5]

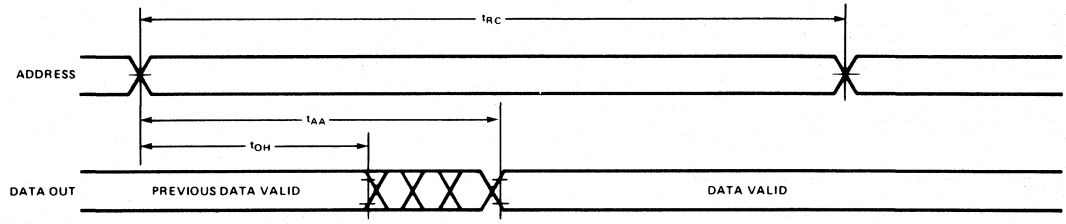

Read Cycle No. 2[4,6]

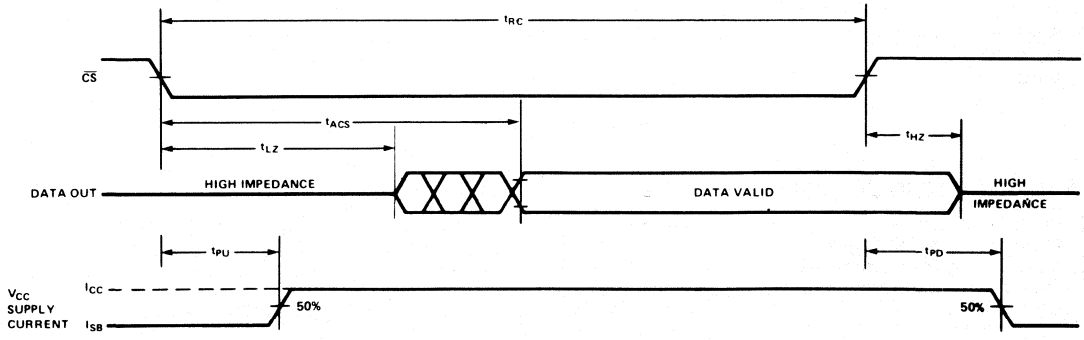

NOTES:
1. All Read Cycle timings are referenced from the last valid address to the first transitioning address.
2. At any given temperature and voltage condition, t_{HZ} max. is less than t_{LZ} min. both for a given device and from device to device.
3. Transition is measured ±500 mV from steady state voltage with specified loading in Figure 2.
4. $\overline{WE}$ is high for Read Cycles.
5. Device is continuously selected, $\overline{CS} = V_{IL}$.
6. Addresses valid prior to or coincident with $\overline{CS}$ transition low.
7. This parameter is sampled and not 100% tested.
8. Chip deselected for greater than 55 ns prior to selection.
9. Chip deselected for a finite time that is less than 55 ns prior to selection. (If the deselect time is 0 ns, the chip is by definition selected and access occurs according to Read Cycle No. 1. Applies to 2147A, 2147AL, 2147A-3, and 2147AL-3.

A.C. CHARACTERISTICS (Continued)
Write Cycle

Symbol	Parameter	2147A-3, 2147AL-3 Min.	Max.	2147A, 2147AL Min.	Max.	Unit
t_{WC} [2]	Write Cycle Time	55		70		ns
t_{CW}	Chip Selection to End of Write	45		55		ns
t_{AW}	Address Valid to End of Write	45		55		ns
t_{AS}	Address Setup Time	0		0		ns
t_{WP}	Write Pulse Width	35		40		ns
t_{WR}	Write Recovery Time	10		15		ns
t_{DW}	Data Valid to End of Write	25		30		ns
t_{DH}	Data Hold Time	10		10		ns
t_{WZ} [3]	Write Enabled to Output in High Z	0	25	0	35	ns
t_{OW} [3]	Output Active from End of Write	0		0		ns

WAVEFORMS

Write Cycle No. 1
($\overline{WE}$ CONTROLLED)[4]

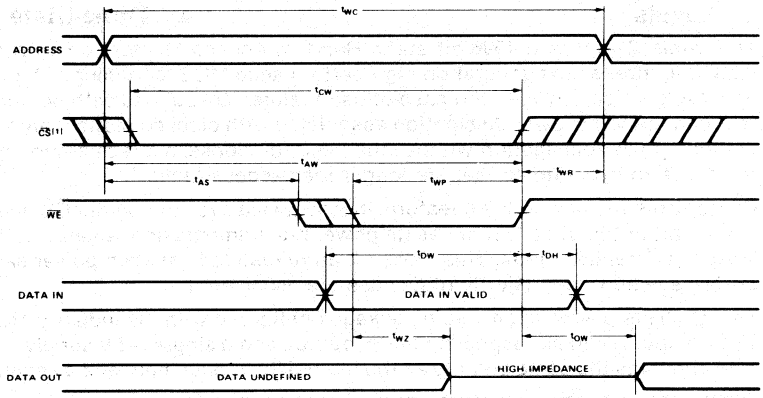

Write Cycle No. 2
($\overline{CS}$ CONTROLLED)[4]

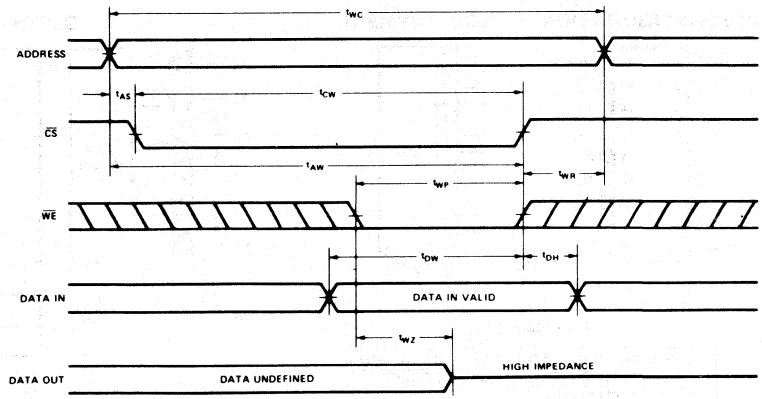

NOTES:
1. If $\overline{CS}$ goes high simultaneously with $\overline{WE}$ high, the output remains in a high impedance state.
2. All Write Cycle timings are referenced from the last valid address to the first transitioning address.
3. Transition is measured ±500 mV from steady state voltage with specified loading in Figure 2.
4. $\overline{CS}$ or $\overline{WE}$ must be high during address transitions.

2147H
HIGH SPEED 4096 x 1 BIT STATIC RAM

	2147H-1	2147H-2	2147H-3	2147HL-3	2147H	2147HL
Max. Access Time (ns)	35	45	55	55	70	70
Max. Active Current (mA)	180	180	180	125	160	140
Max. Standby Current (mA)	30	30	30	15	20	10

- Pinout, Function, and Power Compatible to Industry Standard 2147
- HMOS II Technology
- Completely Static Memory—No Clock or Timing Strobe Required
- Equal Access and Cycle Times
- Single +5V Supply
- 0.8-2.0V Output Timing Reference Levels
- Direct Performance Upgrade for 2147
- Automatic Power-Down
- High Density 18-Pin Package
- Directly TTL Compatible—All Inputs and Output
- Separate Data Input and Output
- Three-State Output

The Intel® 2147H is a 4096-bit static Random Access Memory organized as 4096 words by 1-bit using HMOS-II, Intel's next generation high-performance MOS technology. It uses a uniquely innovative design approach which provides the ease-of-use features associated with non-clocked static memories and the reduced standby power dissipation associated with clocked static memories. To the user this means low standby power dissipation without the need for clocks, address setup and hold times, nor reduced data rates due to cycle times that are longer than access times.

$\overline{CS}$ controls the power-down feature. In less than a cycle time after $\overline{CS}$ goes high—deselecting the 2147H—the part automatically reduces its power requirements and remains in this low power standby mode as long as $\overline{CS}$ remains high. This device feature results in system power savings as great as 85% in larger systems, where the majority of devices are deselected.

The 2147H is placed in an 18-pin package configured with the industry standard 2147 pinout. It is directly TTL compatible in all respects: inputs, output, and a single +5V supply. The data is read out nondestructively and has the same polarity as the input data. A data input and a separate three-state output are used.

PIN CONFIGURATION

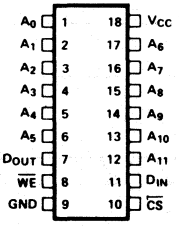

LOGIC SYMBOL

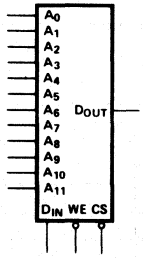

BLOCK DIAGRAM

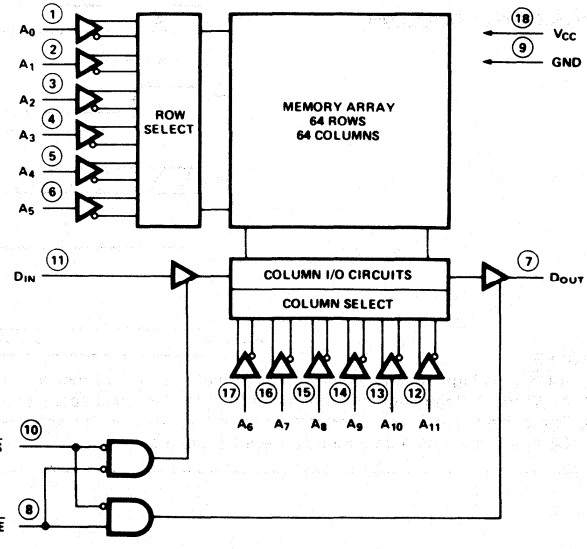

PIN NAMES

A_0–A_{11}	ADDRESS INPUTS	V_{CC}	POWER (+5V)
$\overline{WE}$	WRITE ENABLE	GND	GROUND
$\overline{CS}$	CHIP SELECT		
D_{IN}	DATA INPUT		
D_{OUT}	DATA OUTPUT		

TRUTH TABLE

$\overline{CS}$	$\overline{WE}$	MODE	OUTPUT	POWER
H	X	NOT SELECTED	HIGH Z	STANDBY
L	L	WRITE	HIGH Z	ACTIVE
L	H	READ	D_{OUT}	ACTIVE

ABSOLUTE MAXIMUM RATINGS*

Temperature Under Bias ..... −10°C to 85°C
Storage Temperature ..... −65°C to +150°C
Voltage on Any Pin
With Respect to Ground ..... −3.5V to +7V
Power Dissipation 1.2W
D.C. Output Current ..... 20 mA

**COMMENT: Stresses above those listed under "Absolute Maximum Ratings" may cause permanent damage to the device. This is a stress rating only and functional operation of the device at these or any other conditions above those indicated in the operational sections of this specification is not implied. Exposure to absolute maximum rating conditions for extended periods may affect device reliability.*

D.C. AND OPERATING CHARACTERISTICS[1]

($T_A = 0°C$ to $70°C$, $V_{CC} = +5V \pm 10\%$, unless otherwise noted.)

Symbol	Parameter	2147H-1, 2, 3 Min.	Typ.	Max.	2147HL-3 Min.	Typ.	Max.	2147H Min.	Typ.[2]	Max.	2147HL Min.	Typ.[2]	Max.	Unit	Test Conditions
I_{LI}	Input Load Current (All Input Pins)		0.01	10		0.01	10		0.01	10		0.01	10	μA	V_{CC} = Max., V_{IN} = GND to V_{CC}
$\|I_{LO}\|$	Output Leakage Current		0.1	50		0.1	50		0.1	50		0.1	50	μA	$\overline{CS} = V_{IH}$, V_{CC} = Max., V_{OUT} = GND to 4.5V
I_{CC}	Operating Current		120	170			115		100	150		100	135	mA	$T_A = 25°C$; V_{CC} = Max., $\overline{CS} = V_{IL}$, Outputs Open
				180			125			160			140	mA	$T_A = 0°C$; V_{CC} = Max., $\overline{CS} = V_{IL}$, Outputs Open
I_{SB}	Standby Current		18	30		6	15		12	20		7	10	mA	V_{CC} = Min. to Max., $\overline{CS} = V_{IH}$
I_{PO}[3]	Peak Power-On Current		35	70		25	50		25	50		15	30	mA	V_{CC} = GND to V_{CC} Min., $\overline{CS}$ = Lower of V_{CC} or V_{IH} Min.
V_{IL}	Input Low Voltage	-3.0		0.8	-3.0		0.8	-3.0		0.8	-3.0		0.8	V	
V_{IH}	Input High Voltage	2.0		6.0	2.0		6.0	2.0		6.0	2.0		6.0	V	
V_{OL}	Output Low Voltage			0.4			0.4			0.4			0.4	V	I_{OL} = 8 mA
V_{OH}	Output High Voltage	2.4			2.4			2.4			2.4			V	I_{OH} = −4.0 mA

NOTES:
1. The operating ambient temperature range is guaranteed with transverse air flow exceeding 400 linear feet per minute.
2. Typical limits are at $V_{CC} = 5V$, $T_A = +25°C$, and specified loading.
3. A pull-up resistor to V_{CC} on the CS input is required to keep the device deselected; otherwise, power-on current approaches I_{CC} active.

A.C. TEST CONDITIONS

Input Pulse Levels	GND to 3.0V
Input Rise and Fall Times	5 ns
Input Timing Reference Levels	1.5V
Output Timing Reference Level (2147H-1)	1.5V
Output Timing Reference Levels (2147H, H-2, H-3, HL, HL-3)	0.8-2.0V
Output Load	See Figure 1

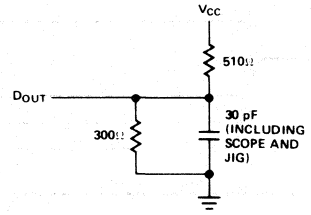

Figure 1. Output Load

CAPACITANCE[4] ($T_A = 25°C$, f = 1.0 MHz)

Symbol	Parameter	Max.	Unit	Conditions
C_{IN}	Input Capacitance	5	pF	$V_{IN} = 0V$
C_{OUT}	Output Capacitance	6	pF	$V_{OUT} = 0V$

NOTE:
4. This parameter is sampled and not 100% tested.

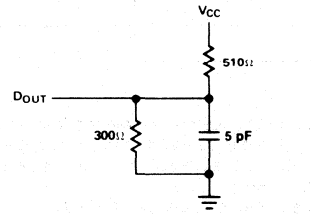

Figure 2. Output Load for t_{HZ}, t_{LZ}, t_{WZ}, t_{OW}

A.C. CHARACTERISTICS ($T_A = 0°C$ to $70°C$, $V_{CC} = +5V \pm 10\%$, unless otherwise noted.)

Read Cycle

Symbol	Parameter	2147H-1 Min.	2147H-1 Max.	2147H-2 Min.	2147H-2 Max.	2147H-3, HL-3 Min.	2147H-3, HL-3 Max.	2147H, 2147HL Min.	2147H, 2147HL Max.	Unit
t_{RC}[1]	Read Cycle Time	35		45		55		70		ns
t_{AA}	Address Access Time		35		45		55		70	ns
t_{ACS1}[8]	Chip Select Access Time		35		45		55		70	ns
t_{ACS2}[9]	Chip Select Access Time		35		45		65		80	ns
t_{OH}	Output Hold from Address Change	5		5		5		5		ns
t_{LZ}[2,3,7]	Chip Selection to Output in Low Z	5		5		10		10		ns
t_{HZ}[2,3,7]	Chip Deselection to Output in High Z	0	30	0	30	0	30	0	40	ns
t_{PU}	Chip Selection to Power Up Time	0		0		0		0		ns
t_{PD}	Chip Deselection to Power Down Time		20		20		20		30	ns

WAVEFORMS

Read Cycle No. 1[4,5]

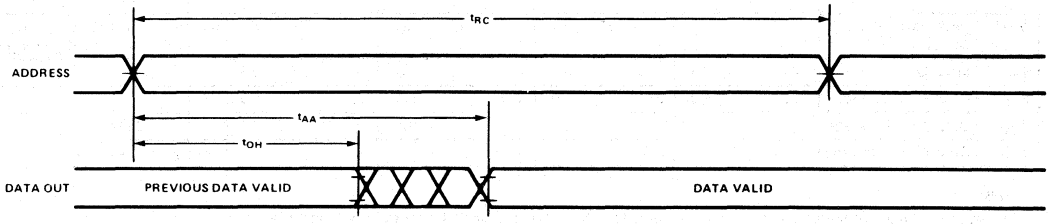

Read Cycle No. 2[4,6]

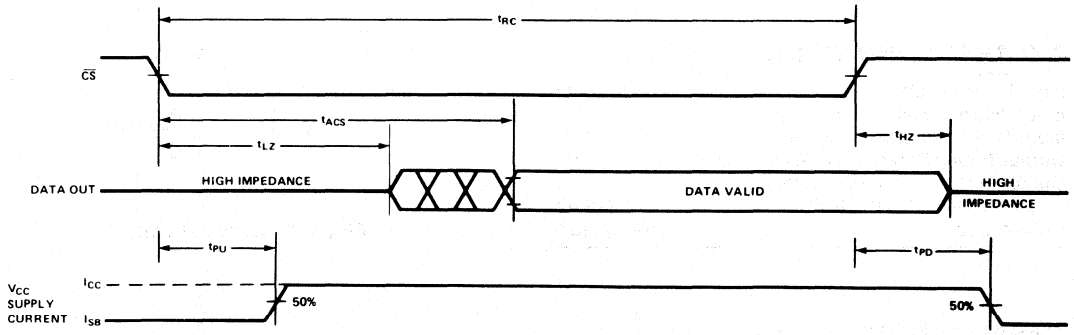

NOTES:

1. All Read Cycle timings are referenced from the last valid address to the first transitioning address.
2. At any given temperature and voltage condition, t_{HZ} max. is less than t_{LZ} min. both for a given device and from device to device.
3. Transition is measured ± 500 mV from steady state voltage with specified loading in Figure 2.
4. $\overline{WE}$ is high for Read Cycles.
5. Device is continuously selected, $\overline{CS} = V_{IL}$.
6. Addresses valid prior to or coincident with $\overline{CS}$ transition low.
7. This parameter is sampled and not 100% tested.
8. Chip deselected for greater than 55 ns prior to selection.
9. Chip deselected for a finite time that is less than 55 ns prior to selection. If the deselect time is 0 ns, the chip is by definition selected and access occurs according to Read Cycle No. 1. Applies to 2147H, 2147HL, 2147H-3, and 2147HL-3.

A.C. CHARACTERISTICS (Continued)

Write Cycle

Symbol	Parameter	2147H-1 Min.	2147H-1 Max.	2147H-2 Min.	2147H-2 Max.	2147H-3, HL-3 Min.	2147H-3, HL-3 Max.	2147H, 2147HL Min.	2147H, 2147HL Max.	Unit
t_{WC}[2]	Write Cycle Time	35		45		55		70		ns
t_{CW}	Chip Selection to End of Write	35		45		45		55		ns
t_{AW}	Address Valid to End of Write	35		45		45		55		ns
t_{AS}	Address Setup Time	0		0		0		0		ns
t_{WP}	Write Pulse Width	20		25		25		40		ns
t_{WR}	Write Recovery Time	0		0		10		15		ns
t_{DW}	Data Valid to End of Write	20		25		25		30		ns
t_{DH}	Data Hold Time	10		10		10		10		ns
t_{WZ}[3]	Write Enabled to Output in High Z	0	20	0	25	0	25	0	35	ns
t_{OW}[3]	Output Active from End of Write	0		0		0		0		ns

WAVEFORMS

Write Cycle No. 1

($\overline{WE}$ CONTROLLED)[4]

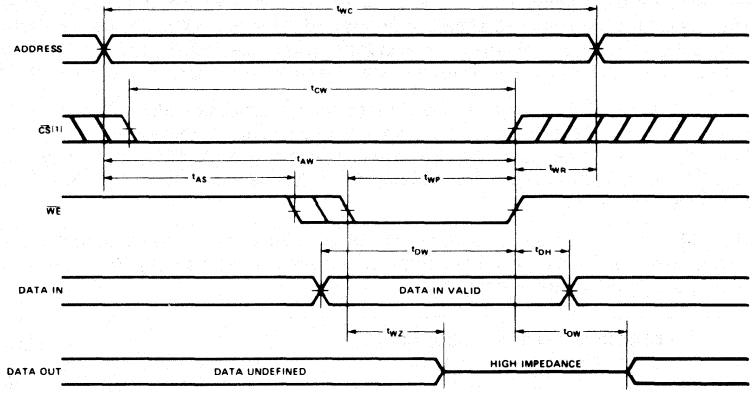

Write Cycle No. 2

($\overline{CS}$ CONTROLLED)[4]

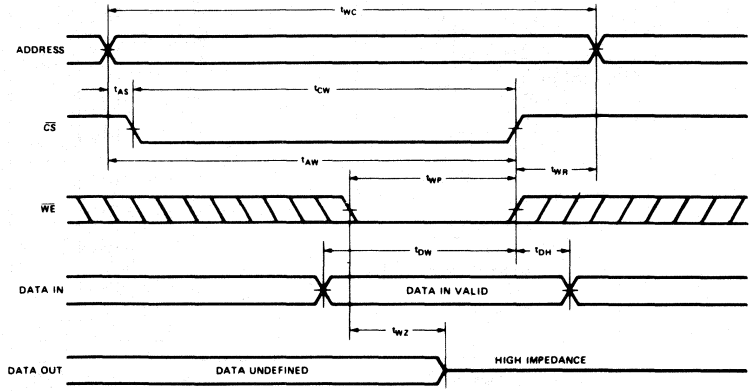

NOTES:

1. If $\overline{CS}$ goes high simultaneously with $\overline{WE}$ high, the output remains in a high impedance state.
2. All Write Cycle timings are referenced from the last valid address to the first transitioning address.
3. Transition is measured ±500 mV from steady state voltage with specified loading in Figure 2.
4. $\overline{CS}$ or $\overline{WE}$ must be high during address transitions.

2148H
1024 x 4 BIT STATIC RAM

	2148H-2	2148H-3	2148H	2148HL-3	2148HL
Max. Access Time (ns)	45	55	70	55	70
Max. Active Current (mA)	180	180	180	125	125
Max. Standby Current (mA)	30	30	30	20	20

- **Automatic Power-Down**
- **Industry Standard 2114A and 2148 Pinout**
- **HMOS II Technology**
- **Functionally Compatible to the 2148**
- **Completely Static Memory — No Clock or Timing Strobe Required**
- **Equal Access and Cycle Times**
- **High Density 18-Pin Package**
- **Common Data Input and Output**
- **Three-State Output**
- **Single +5V Supply**
- **Fast Chip Select Access 2149H Available**

The Intel® 2148H is a 4096-bit static Random Access Memory organized as 1024 words by 4 bits using HMOS II, a high-performance MOS technology. It uses a uniquely innovative design approach which provides the ease-of-use features associated with non-clocked static memories and the reduced standby power dissipation associated with clocked static memories. To the user this means low standby power dissipation without the need for clocks, address setup and hold times, nor reduced data rates due to cycle times that are longer than access times.

$\overline{CS}$ controls the power-down feature. In less than a cycle time after $\overline{CS}$ goes high — disabling the 2148H — the part automatically reduces its power requirements and remains in this low power standby mode as long as $\overline{CS}$ remains high. This device feature results in system power savings as great as 85% in larger systems, where the majority of devices are disabled. A non-power-down companion, the 2149H, is available to provide a fast chip select access time for speed critical applications.

The 2148H is assembled in an 18-pin package configured with the industry standard 1K x 4 pinout. It is directly TTL compatible in all respects: inputs, outputs, and a single +5V supply. The data is read out nondestructively and has the same polarity as the input data.

PIN CONFIGURATION

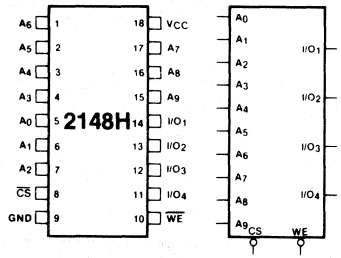

LOGIC SYMBOL

PIN NAMES

A_0-A_9	ADDRESS INPUTS
$\overline{WE}$	WRITE ENABLE
$\overline{CS}$	CHIP SELECT
I/O_1-I/O_4	DATA INPUT/OUTPUT
V_{CC}	POWER (+5V)
GND	GROUND

TRUTH TABLE

$\overline{CS}$	$\overline{WE}$	MODE	I/O	POWER
H	X	NOT SELECTED	HIGH-Z	STANDBY
L	L	WRITE	D_{IN}	ACTIVE
L	H	READ	D_{OUT}	ACTIVE

Figure 1. Pin Configuration, Logic Symbol, Pin Names and Truth Table

BLOCK DIAGRAM

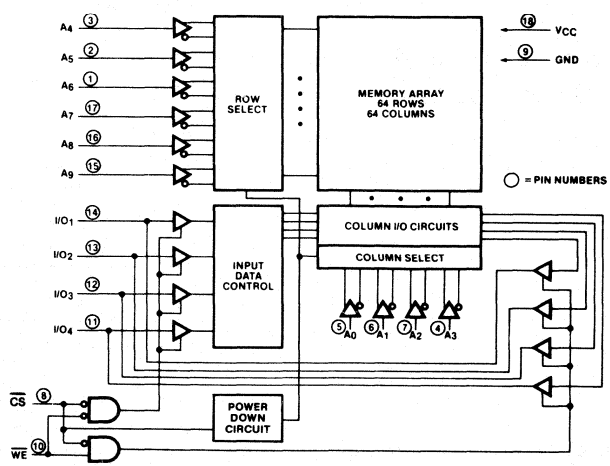

Figure 2. 2148H Block Diagram

ABSOLUTE MAXIMUM RATINGS*

Temperature Under Bias ..... −10°C to +85°C
Storage Temperature ..... −65°C to +150°C
Voltage on Any Pin with
Respect to Ground ..... −3.5V to +7V
D.C. Continuous Output Current ..... 20 mA
Power Dissipation 1.2W

**COMMENT: Stresses above those listed under "Absolute Maximum Ratings" may cause permanent damage to the device. This is a stress rating only and functional operation of the device at these or any other conditions above those indicated in the operational sections of this specification is not implied. Exposure to absolute maximum rating conditions for extended periods may affect device reliability.*

D.C. AND OPERATING CHARACTERISTICS[1]

$T_A = 0°C$ to $+70°C$, $V_{CC} = +5V \pm 10\%$ unless otherwise noted.

Symbol	Parameter	2148H-2/H-3/HL-3 Min.	Typ[2]	Max.	2148HL/HL-3 Min.	Typ[2]	Max.	Unit	Test Conditions
$\|I_{LI}\|$	Input Load Current (All Input Pins)		0.01	10		0.01	10	μA	V_{CC} = max, V_{IN} = GND to V_{CC}
$\|I_{LO}\|$	Output Leakage Current		0.1	50		0.1	50	μA	$\overline{CS}$ = V_{IH}, V_{CC} = max, V_{OUT} = GND to 4.5V
I_{CC}	Operating Current		120	180		90	125	mA	V_{CC} = max, $\overline{CS}$ = V_{IL}, Outputs Open
I_{SB}	Standby Current		15	30		10	20	mA	V_{CC} = min to max, $\overline{CS}$ = V_{IH}
I_{PO}[3]	Peak Power-On Current		25	50		15	30	mA	V_{CC} = GND to V_{CC} min, $\overline{CS}$ = Lower of V_{CC} or V_{IH} min
V_{IL}	Input Low Voltage	−3.0		0.8	−3.0		0.8	V	
V_{IH}	Input High Voltage	2.1		6.0	2.1		6.0	V	
V_{OL}	Output Low Voltage			0.4			0.4	V	I_{OL} = 8 mA
V_{OH}	Output High Voltage	2.4			2.4			V	I_{OH} = −4.0 mA
I_{OS}	Output Short Circuit Current		±250	±275		±250	±275	mA	V_{OUT} = GND to V_{CC}

Notes:

1. The operating ambient temperature range is guaranteed with transverse air flow exceeding 400 linear feet per minute. Typical thermal resistance values of the package at maximum temperatures are:
   θ_{JA} (@ 400 f_{PM} air flow) = 40° C/W
   θ_{JA} (still air) = 70° C/W
   θ_{JC} = 25° C/W
2. Typical limits are at V_{CC} = 5V, T_A = +25°C, and Load A.
3. A pull-up resistor to V_{CC} on the $\overline{CS}$ input is required to keep the device deselected during power-on. Otherwise, power-on current approaches I_{CC} active.

A.C. TEST CONDITIONS

Input Pulse Levels	GND to 3.0 Volts
Input Rise and Fall Times	5 nsec
Input and Output Timing Reference Levels	1.5 Volts
Output Load	See Load A.

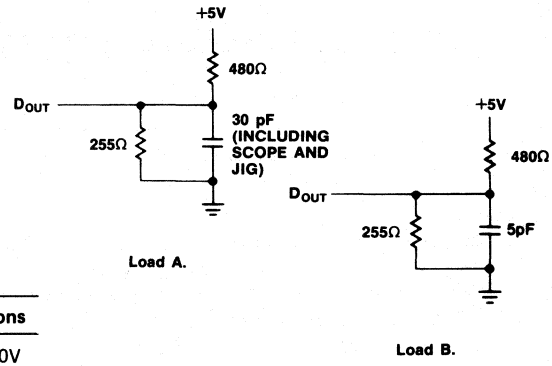

Load A.

Load B.

CAPACITANCE [4]

$T_A = 25°C$, f = 1.0 MHz

Symbol	Parameter	Max.	Unit	Conditions
C_{IN}	Address/Control Capacitance	5	pF	V_{IN} = 0V
C_{IO}	Input/Output Capacitance	7	pF	V_{OUT} = 0V

Note 4. This parameter is sampled and not 100% tested.

A.C. CHARACTERISTICS

$T_A = 0°C$ to $+70°C$, $V_{CC} = +5V \pm 10\%$, unless otherwise noted.

READ CYCLE

Symbol	Parameter	2148H-2 Min.	2148H-2 Max.	2148H-3/HL-3 Min.	2148H-3/HL-3 Max.	2148H/HL Min.	2148H/HL Max.	Unit	Test Conditions
t_{RC}	Read Cycle Time	45		55		70		ns	
t_{AA}	Address Access Time		45		55		70	ns	
t_{ACS1}	Chip Select Access Time		45		55	70		ns	Note 1
t_{ACS2}	Chip Select Access Time		55		65		80	ns	Note 2
t_{OH}	Output Hold from Address Change	5		5		5		ns	
t_{LZ}	Chip Selection Output in Low Z	20		20		20		ns	Note 6
t_{HZ}	Chip Deselection to Output in High Z	0	20	0	20	0	20	ns	Note 6
t_{PU}	Chip Selection to Power Up Time	0		0		0		ns	
t_{PD}	Chip Deselection to Power Down Time		30		30		30	ns	

WAVEFORMS

READ CYCLE NO. 1[3, 4]

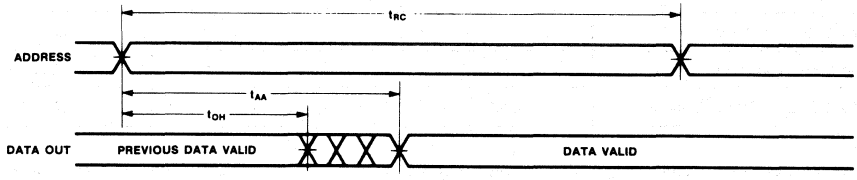

READ CYCLE NO. 2[3, 5]

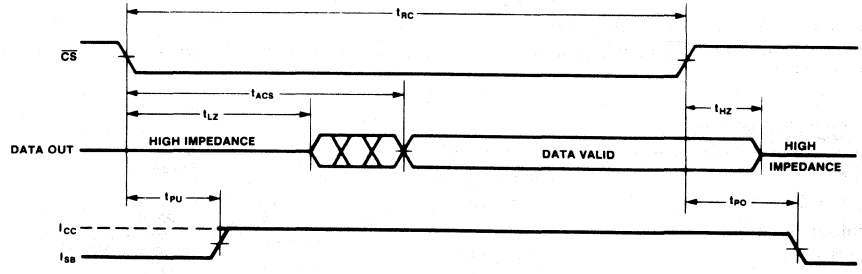

Notes:

1. Chip deselected for greater than 55 ns prior to $\overline{CS}$ transition low.
2. Chip deselected for a finite time that is less than 55 ns prior to $\overline{CS}$ transition low. (If the deselect time is 0 ns, the chip is by definition selected and access occurs according to Read Cycle No. 1.)
3. $\overline{WE}$ is high for Read Cycles.
4. Device is continuously selected, $\overline{CS} = V_{IL}$.
5. Addresses valid prior to or coincident with $\overline{CS}$ transition low.
6. Transition is measured ±500mV from high impedance voltage with Load B. This parameter is sampled and not 100% tested.

A.C. CHARACTERISTICS (Continued)

WRITE CYCLE

Symbol	Parameter	2148H-2 Min.	2148H-2 Max.	2148H-3/HL-3 Min.	2148H-3/HL-3 Max.	2148H/HL Min.	2148H/HL Max.	Unit	Test Conditions
t_{WC}	Write Cycle Time	45		55		70		ns	
t_{CW}	Chip Selection to End of Write	40		50		65		ns	
t_{AW}	Address Valid to End of Write	40		50		65		ns	
t_{AS}	Address Setup Time	0		0		0		ns	
t_{WP}	Write Pulse Width	35		40		50		ns	
t_{WR}	Write Recovery Time	5		5		5		ns	
t_{DW}	Data Valid to End of Write	20		20		25		ns	
t_{DH}	Data Hold Time	0		0		0		ns	
t_{WZ}	Write Enabled to Output in High Z	0	15	0	20	0	25	ns	Note 2
t_{OW}	Output Active from End of Write	0		0		0		ns	Note 2

WAVEFORMS

WRITE CYCLE No. 1 ($\overline{WE}$ CONTROLLED)

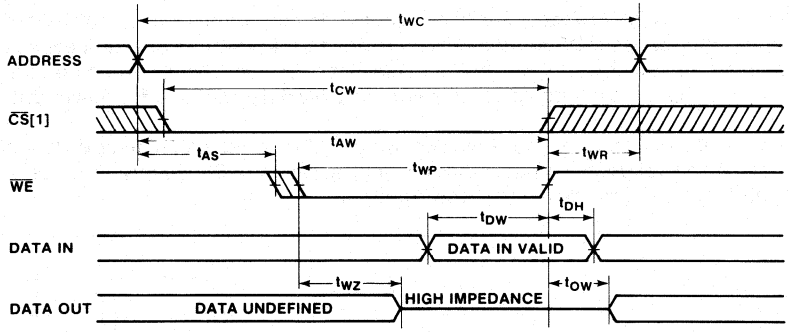

WRITE CYCLE No. 2 ($\overline{CS}$ CONTROLLED)

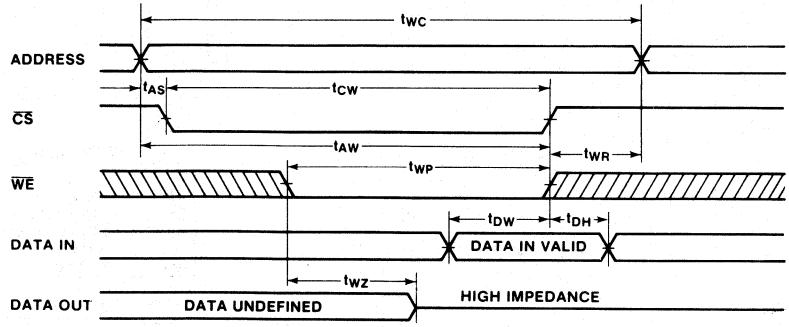

Notes: 1. If $\overline{CS}$ goes high simultaneously with $\overline{WE}$ high, the output remains in a high impedance state.

2. Transition is measured ±500mV from high impedance voltage with Load B. This parameter is sampled and not 100% tested.

2149H
1024 x 4-BIT STATIC RAM

	2149H-2	2149H-3	2149H	2149HL-3	2149HL
Max. Address Access Time (ns)	45	55	70	55	70
Max. Chip Select Access Time (ns)	20	25	30	25	30
Max. Active Current (mA)	180	180	180	125	125

- **Fast Chip Select Access Time—20ns Maximum**
- **HMOS II Technology**
- **Equal Access and Cycle Times**
- **Completely Static Memory—No Clock or Timing Strobe Required**
- **High Density 18-Pin Package**
- **Common Data Input and Output**
- **Three-State Output**
- **Single +5V Supply**
- **Automatic Power-Down 2148H Available**

The Intel® 2149H is a 4096-bit static Random Access Memory organized as 1024 words by 4 bits using HMOS II, a high performance MOS technology. It provides a maximum chip select access time as low as 20 ns instead of an automatic power-down feature. This fast chip select access time feature increases system throughput. An automatic power-down companion, the 2148H, is available for power critical applications.

The 2149H is assembled in an 18-pin package configured with the industry standard 1Kx4 pinout. It is directly TTL compatible in all respects: inputs, outputs and a single +5V supply. The data is read out non-destructively and has the same polarity as the input data.

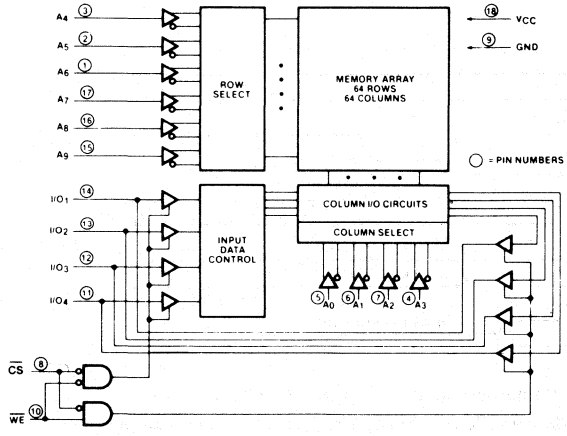

Figure 1. 2149H Block Diagram

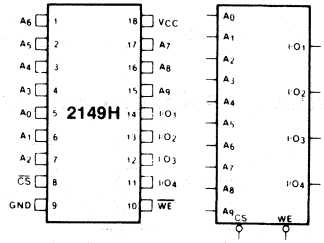

PIN NAMES

A_0-A_9	ADDRESS INPUTS
$\overline{WE}$	WRITE ENABLE
$\overline{CS}$	CHIP SELECT
I/O_1-I/O_4	DATA INPUT/OUTPUT
V_{CC}	POWER (+5V)
GND	GROUND

TRUTH TABLE

$\overline{CS}$	$\overline{WE}$	MODE	I/O
H	X	NOT SELECTED	HIGH-Z
L	L	WRITE	D_{IN}
L	H	READ	D_{OUT}

Figure 2. 2149H Pin Diagram

ABSOLUTE MAXIMUM RATINGS*

Temperature Under Bias . . . . . – 10°C to + 85°C
Storage Temperature . . . . . – 65°C to + 150°C
Voltage on Any Pin with
Respect to Ground . . . . . – 3.5V to + 7V
D.C. Continuous Output Current . . . . . 20 mA
Power Dissipation 1.2W

** COMMENT: Stresses above those listed under "Absolute Maximum Ratings" may cause permanent damage to the device. This is a stress rating only and functional operation of the device at these or any other conditions above those indicated in the operational sections of this specification is not implied. Exposure to absolute maximum rating conditions for extended periods may affect device reliability.*

D.C. AND OPERATING CHARACTERISTICS[1]

$T_A = 0°C$ to $+70°C$, $V_{CC} = +5V \pm 10\%$ unless otherwise noted.

Symbol	Parameter	2149H/H-2/H-3 Min.	Typ[2]	Max.	2149HL/HL-3 Min.	Typ[2]	Max.	Unit	Test Conditions
$\|I_{LI}\|$	Input Load Current (All Input Pins)		0.01	10		0.01	10	μA	V_{CC} = max, V_{IN} = GND to V_{CC}
$\|I_{LO}\|$	Output Leakage Current		0.1	50		0.1	50	μA	$\overline{CS}$ = V_{IH}, V_{CC} = max, V_{OUT} = GND to 4.5V
I_{CC}	Operating Current		120	180		90	125	mA	V_{CC} = max, $\overline{CS}$ = V_{IL}, Outputs Open
V_{IL}	Input Low Voltage	−3.0		0.8	−3.0		0.8	V	
V_{IH}	Input High Voltage	2.0		6.0	2.0		6.0	V	
V_{OL}	Output Low Voltage			0.4			0.4	V	I_{OL} = 8 mA
V_{OH}	Output High Voltage	2.4			2.4			V	I_{OH} = −4.0 mA
I_{OS}	Output Short Circuit Current		±150	±200		±150	±200	mA	V_{OUT} = GND to V_{CC}

Notes:

1. The operating ambient temperature range is guaranteed with transverse air flow exceeding 400 linear feet per minute. Typical thermal resistance values of the package at maximum temperatures are:
   θ_{JA} (@ 400 f_{PM} air flow) = 40° C/W
   θ_{JA} (still air) = 70° C/W
   θ_{JC} = 25° C/W
2. Typical limits are at V_{CC} = 5V, T_A = +25°C, and Load A.

A.C. TEST CONDITIONS

Input Pulse Levels	GND to 3.0 Volts
Input Rise and Fall Times	5 nsec
Input and Output Timing Reference Levels	1.5 Volts
Output Load	See Load A.

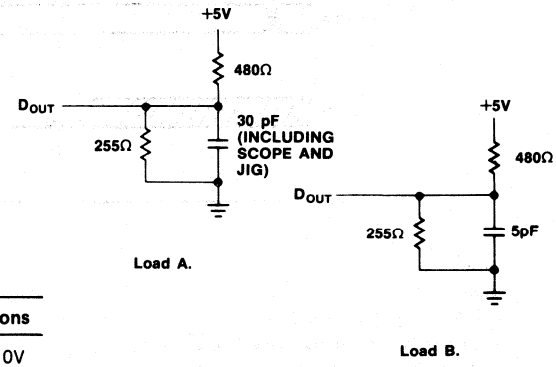

CAPACITANCE [3]

$T_A = 25°C$, f = 1.0 MHz

Symbol	Parameter	Max.	Unit	Conditions
C_{IN}	Address/Control Capacitance	5	pF	V_{IN} = 0V
C_{IO}	Input/Output Capacitance	7	pF	V_{OUT} = 0V

Note 3. This parameter is sampled and not 100% tested.

A.C. CHARACTERISTICS

$T_A = 0°C$ to $+70°C$, $V_{CC} = +5V \pm 10\%$ unless otherwise noted.

READ CYCLE

Symbol	Parameter	2149H-2 Min.	2149H-2 Max.	2149H-3/HL-3 Min.	2149H-3/HL-3 Max.	2149H/HL Min.	2149H/HL Max.	Unit	Test Conditions
t_{RC}	Read Cycle Time	45		55		70		ns	
t_{AA}	Address Access Time		45		55		70	ns	
t_{ACS}	Chip Select Access Time		20		25		30	ns	
t_{OH}	Output Hold from Address Change	5		5		5		ns	
t_{LZ}	Chip Selection Output in Low Z	5		5		5		ns	Note 3, 4
t_{HZ}	Chip Deselection to Output in High Z	0	15	0	15	0	15	ns	Note 3, 4

WAVEFORMS

READ CYCLE No. 1[1, 2]

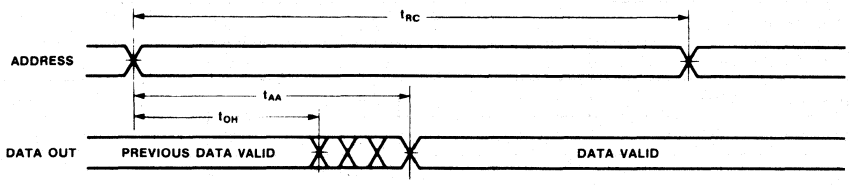

READ CYCLE No. 2[3]

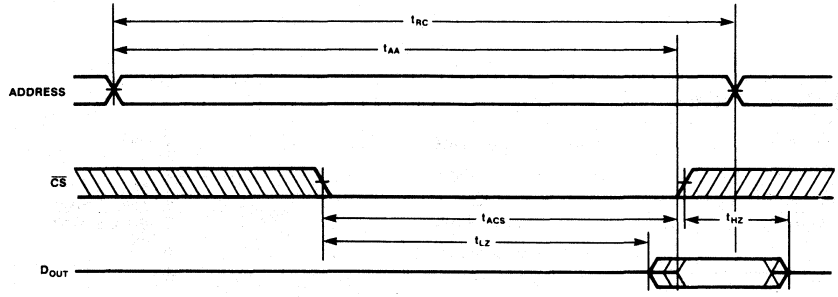

Notes:

1. $\overline{WE}$ is high for Read Cycles.
2. Device is continuously selected, $\overline{CS} = V_{IL}$.
3. At any given temperature and voltage condition, t_{HZ} max. is less than t_{LZ} min. both for a given device and from device to device.
4. Transition is measured ±500 mV from high impedance voltage with Load B. This parameter is sampled and not 100% tested.

A.C. CHARACTERISTICS (continued)

WRITE CYCLE

Symbol	Parameter	2149H-2 Min.	2149H-2 Max.	2149H-3/HL-3 Min.	2149H-3/HL-3 Max.	2149H/HL Min.	2149H/HL Max.	Unit	Test Conditions
t_{WC}	Write Cycle Time	45		55		70		ns	
t_{CW}	Chip Selection to End of Write	40		50		65		ns	
t_{AW}	Address Valid to End of Write	40		50		65		ns	
t_{AS}	Address Setup Time	0		0		0		ns	
t_{WP}	Write Pulse Width	35		40		50		ns	
t_{WR}	Write Recovery Time	5		5		5		ns	
t_{DW}	Data Valid to End of Write	20		20		25		ns	
t_{DH}	Data Hold Time	0		0		0		ns	
t_{WZ}	Write Enabled to Output in High Z	0	15	0	20	0	25	ns	Note 2
t_{OW}	Output Active from End of Write	0		0		0		ns	Note 2

WAVEFORMS

WRITE CYCLE No. 1 ($\overline{WE}$ CONTROLLED)

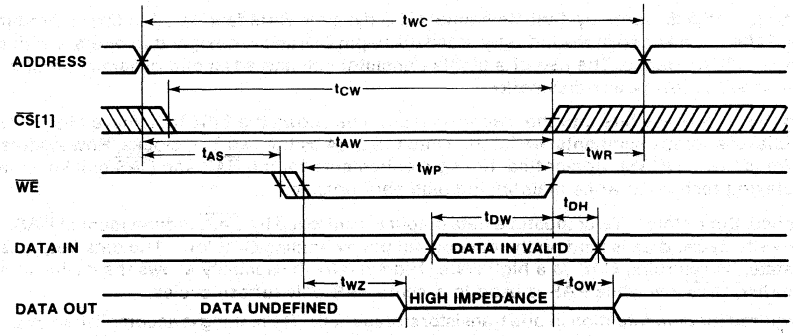

WRITE CYCLE No. 2 ($\overline{CS}$ CONTROLLED)

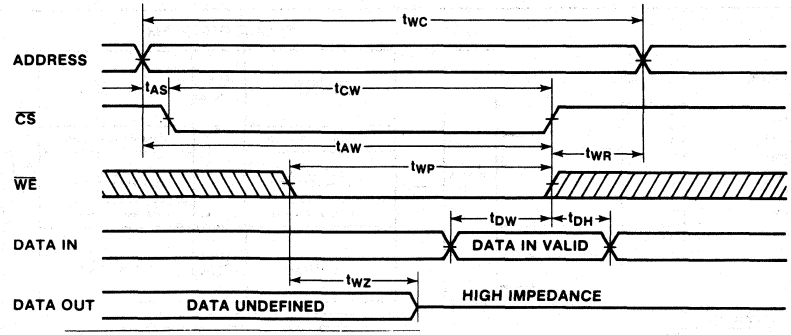

Notes:

1. If $\overline{CS}$ goes high simultaneously with $\overline{WE}$ high, the output remains in a high impedance state.
2. Transition is measured ±500 mV from high impedance voltage with Load B. This parameter is sampled and not 100% tested.

PRELIMINARY

2164 FAMILY
65,536 x 1 BIT DYNAMIC RAM

	2164-15	2164-20
Maximum Access Time (ns)	150	200
Read, Write Cycle (ns)	300	375
Read-Modify-Write Cycle (ns)	345	435

- **Industry Standard 16-pin DIP**
- **HMOS Technology**
- **Single +5V Supply, ±10% Tolerance**
- **All Inputs, Including Clocks, TTL Compatible**
- **Pin 1 is No Connect to Allow for Future System Upgrade**
- **128 Refresh Cycles/2 ms $\overline{RAS}$-only Refresh**
- **Non-Latched Output is Three-State TTL Compatible**
- **Compatible with 2118**
- **Inputs Allow Negative Overshoot, V_{IL} MIN = -2V**
- **Page Mode and Hidden Refresh Capability**

The Intel 2164 is a 65,536 words by 1-bit N-channel MOS dynamic RAM fabricated in Intel's production proven HMOS process. The 2164 is packaged in the industry standard 16-pin DIP and is designed to operate with a single + 5V power supply, with ± 10% tolerance. The use of a single transistor cell and advanced dynamic circuitry enable the 2164 to achieve high speed at low power dissipation.

Multiplexing the 16 address bits into the 8 address input pins allows the 2164 to achieve high packaging density. The two 8-bit TTL level address segments are latched into the 2164 by the two TTL clocks, Row Address Strobe ($\overline{RAS}$) and Column Address Strobe ($\overline{CAS}$). Non-critical timing requirements for the $\overline{RAS}$ and $\overline{CAS}$ clocks allow the use of the address multiplexing technique while maintaining high performance.

The non-latched, three state, TTL compatible data output is controlled by $\overline{CAS}$, independent of $\overline{RAS}$. After a valid read or read-modify-write cycle, data is held on the data output pin by holding $\overline{CAS}$ low. The data output is returned to a high impedance state, by returning $\overline{CAS}$ to a high state. Hidden refresh capability allows the device to maintain data at the output by holding $\overline{CAS}$ low while $\overline{RAS}$ is used to execute $\overline{RAS}$-only refresh cycles.

Refresh is required for data retention in one transistor storage cells. Refreshing is accomplished by performing $\overline{RAS}$-only cycles, hidden refresh cycles, or normal read or write cycles on the 128 address combinations of addresses A_0 through A_6, during a 2ms period. Address input A_7 is a don't care during these refresh cycles. A write cycle will refresh stored data on all bits of the selected row except the bit which is addressed.

PIN CONFIGURATION

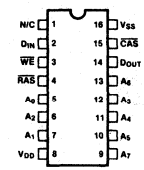

LOGIC SYMBOL

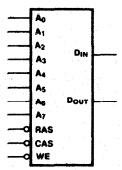

A_0-A_7	ADDRESS INPUTS
$\overline{CAS}$	COLUMN ADDRESS STROBE
D_{IN}	DATA IN
D_{OUT}	DATA OUT
$\overline{WE}$	WRITE ENABLE
$\overline{RAS}$	ROW ADDRESS STROBE
V_{DD}	POWER (+5V)
V_{SS}	GROUND

BLOCK DIAGRAM

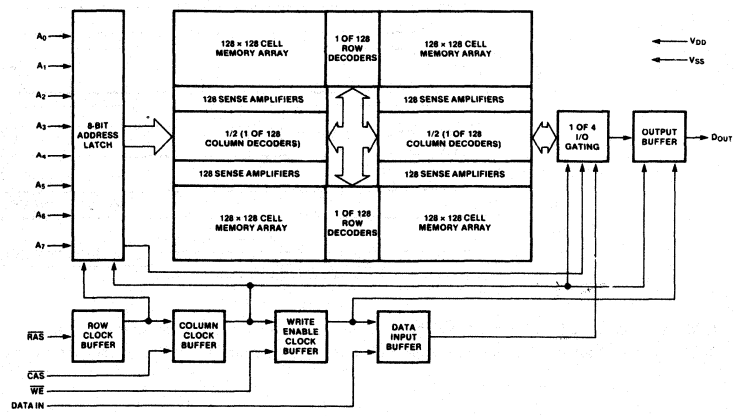

ABSOLUTE MAXIMUM RATINGS*

Ambient Temperature Under Bias .... −10°C to +80°C
Storage Temperature ..... −65°C to +150°C
Voltage on Any Pin Relative to V_{SS} 7.5V
Data Out Current 50mA
Power Dissipation 1.0W

*COMMENT:

Stresses above those listed under "Absolute Maximum Rating" may cause permanent damage to the device. This is a stress rating only and functional operation of the device at these or at any other condition above those indicated in the operational sections of this specification is not implied. Exposure to absolute maximum rating conditions for extended periods may affect device reliability.

D.C. AND OPERATING CHARACTERISTICS[1]

T_A = 0°C to 70°C, V_{DD} = 5V ±10%, V_{SS} = 0V, unless otherwise noted.

Symbol	Parameter	Limits Min.	Typ.[2]	Max.	Unit	Test Conditions	Notes
$\|I_{LI}\|$	Input Load Current (any input)			10	µA	V_{IN}=V_{SS} to V_{DD}	
$\|I_{LO}\|$	Output Leakage Current for High Impedance State			10	µA	Chip Deselected: $\overline{CAS}$ at V_{IH}, V_{OUT} = 0 to 5.5V	
I_{DD1}	V_{DD} Supply Current, Standby		3	5	mA	$\overline{CAS}$ and $\overline{RAS}$ at V_{IH}	
I_{DD2}	V_{DD} Supply Current, Operating			60	mA	2164-15, t_{RC} = t_{RCMIN}	3
				55	mA	2164-20, t_{RC} = t_{RCMIN}	3
I_{DD3}	V_{DD} Supply Current, $\overline{RAS}$-Only Cycle			50	mA	2164-15, t_{RC} = t_{RCMIN}	
				40	mA	2164-20, t_{RC} = t_{RCMIN}	
I_{DD5}	V_{DD} Supply Current, Standby, Output Enabled			7	mA	$\overline{CAS}$ at V_{IL}, $\overline{RAS}$ at V_{IH}	3
V_{IL}	Input Low Voltage (all inputs)	-2.0		0.8	V		
V_{IH}	Input High Voltage (all inputs)	2.4		7.0	V		
V_{OL}	Output Low Voltage			0.4	V	I_{OL} = 4.2mA	
V_{OH}	Output High Voltage	2.4			V	I_{OH} = -5mA	

NOTES:
1. All voltages referenced to V_{SS}.
2. Typical values are for T_A = 25°C and nominal supply voltages.
3. I_{DD} is dependent on output loading when the device output is selected. Specified $I_{DD\ MAX}$ is measured with the output open.

CAPACITANCE[1]

T_A = 25°C, V_{DD} = 5V ± 10%, V_{SS} = 0V, unless otherwise noted.

Symbol	Parameter	Typ.	Max.	Unit
C_{11}	Address, Data In	3	6	pF
C_{12}	$\overline{WE}$, Data Out	4	7	pF
C_{13}	$\overline{RAS}$, $\overline{CAS}$	5	8	pF

NOTES:
1. Capacitance measured with Boonton Meter or effective capacitance calculated from the equation:
$C = \frac{I\Delta t}{\Delta V}$ with ΔV equal to 3 volts and power supplies at nominal levels.

A.C. CHARACTERISTICS[1,2,3]

T_A = 0°C to 70°C, V_{DD} = 5V ±10%, V_{SS} = 0V, unless otherwise noted.

READ, WRITE, READ-MODIFY-WRITE AND REFRESH CYCLES

Symbol	Parameter	2164-15 Min.	2164-15 Max.	2164-20 Min.	2164-20 Max.	Unit	Notes
t_{RAC}	Access Time From $\overline{RAS}$		150		200	ns	4,5
t_{CAC}	Access Time From $\overline{CAS}$		85		110	ns	4,5,6
t_{REF}	Time Between Refresh		2		2	ms	
t_{RP}	$\overline{RAS}$ Precharge Time	120		135		ns	
t_{CPN}	$\overline{CAS}$ Precharge Time (non-page cycles)	25		35		ns	
t_{CRP}	$\overline{CAS}$ to $\overline{RAS}$ Precharge Time	– 20		– 20		ns	
t_{RCD}	$\overline{RAS}$ to $\overline{CAS}$ Delay Time	35	65	40	90	ns	7
t_{RSH}	$\overline{RAS}$ Hold Time	85		110		ns	
t_{CSH}	$\overline{CAS}$ Hold Time	150		200		ns	
t_{ASR}	Row Address Set-Up Time	0		0		ns	
t_{RAH}	Row Address Hold Time	25		30		ns	
t_{ASC}	Column Address Set-Up Time	0		0		ns	
t_{CAH}	Column Address Hold Time	35		45		ns	
t_{AR}	Column Address Hold Time, to $\overline{RAS}$	100		135		ns	
t_T	Transition Time (Rise and Fall)	3	50	3	50	ns	8
t_{OFF}	Output Buffer Turn Off Delay	0	40	0	50	ns	
READ AND REFRESH CYCLES							
t_{RC}	Random Read Cycle Time	300		375		ns	
t_{RAS}	$\overline{RAS}$ Pulse Width	150	10000	200	10000	ns	
t_{CAS}	$\overline{CAS}$ Pulse Width	85	10000	110	10000	ns	
t_{RCS}	Read Command Set-Up Time	0		0		ns	
t_{RCH}	Read Command Hold Time	0		0		ns	
WRITE CYCLE							
t_{RC}	Random Write Cycle Time	300		375		ns	
t_{RAS}	$\overline{RAS}$ Pulse Width	150	10000	200	10000	ns	
t_{CAS}	$\overline{CAS}$ Pulse Width	85	10000	110	10000	ns	
t_{WCS}	Write Command Set-Up Time	0		0		ns	9
t_{WCH}	Write Command Hold Time	30		40		ns	
t_{WCR}	Write Command Hold Time, to $\overline{RAS}$	95		130		ns	
t_{WP}	Write Command Pulse Width	30		40		ns	
t_{RWL}	Write Command to $\overline{RAS}$ Lead Time	40		50		ns	
t_{CWL}	Write Command to $\overline{CAS}$ Lead Time	40		50		ns	
t_{DS}	Data-In Set-Up Time	0		0		ns	
t_{DH}	Data-In Hold Time	35		45		ns	
t_{DHR}	Data-In Hold Time, to $\overline{RAS}$	100		135		ns	
READ-MODIFY-WRITE CYCLE							
t_{RWC}	Read-Modify-Write Cycle Time	305		375		ns	
t_{RRW}	RMW Cycle $\overline{RAS}$ Pulse Width	175	10000	230	10000	ns	
t_{CRW}	RMW Cycle $\overline{CAS}$ Pulse Width	110	10000	140	10000	ns	
t_{RWD}	$\overline{RAS}$ to $\overline{WE}$ Delay	130		175		ns	9
t_{CWD}	$\overline{CAS}$ to $\overline{WE}$ Delay	65		85		ns	9

NOTES:

1. All voltages referenced to V_{SS}.
2. Eight cycles are required after power-up or prolonged periods (greater than 2ms) of $\overline{RAS}$ inactivity before proper device operation is achieved. Any 8 cycles which perform refresh are adequate for this purpose.
3. A.C. Characteristics assume t_T = 5ns.
4. Assume that $t_{RCD} \leq t_{RCD}$ (max.). If t_{RCD} is greater than t_{RCD} (max.) then t_{RAC} will increase by the amount that t_{RCD} exceeds t_{RCD} (max.).
5. Load = 2 TTL loads and 100pF.
6. Assumes $t_{RCD} \geq t_{RCD}$ (max.).
7. t_{RCD} (max.) is specified as a reference point only; if t_{RCD} is less than t_{RCD} (max.) access time is t_{RAC}, if t_{RCD} is greater than t_{RCD} (max.) access time is $t_{RCD} + t_{CAC}$.
8. t_T is measured between V_{IH} (min.) and V_{IL} (max.).
9. t_{WCS}, t_{CWD} and t_{RWD} are specified as reference points only. If $t_{WCS} \geq t_{WCS}$ (min.) the cycle is an early write cycle and the data out pin will remain high impedance throughout the entire cycle. If $t_{CWD} \geq t_{CWD}$ (min.) and $t_{RWD} \geq t_{RWD}$ (min.), the cycle is a read-modify-write cycle and the data out will contain the data read from the selected address. If neither of the above conditions is satisfied, the condition of the data out is indeterminate.

WAVEFORMS

READ CYCLE

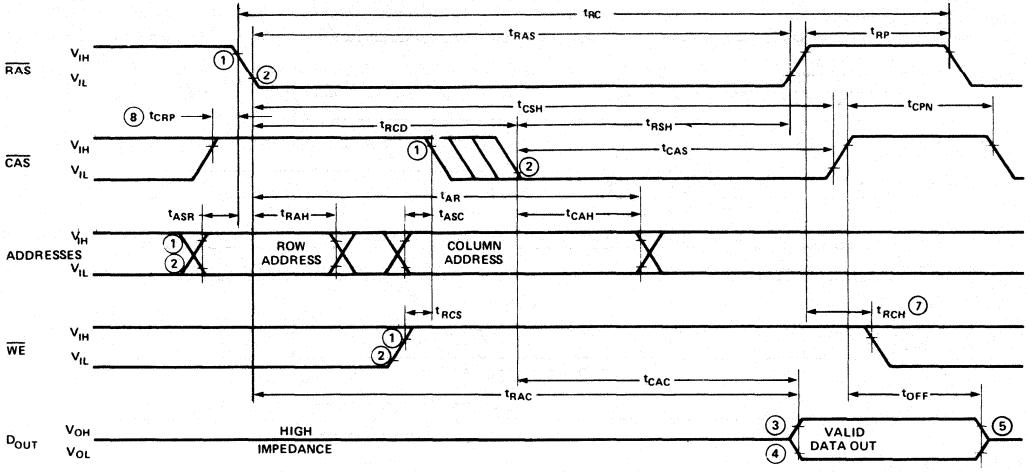

WRITE CYCLE

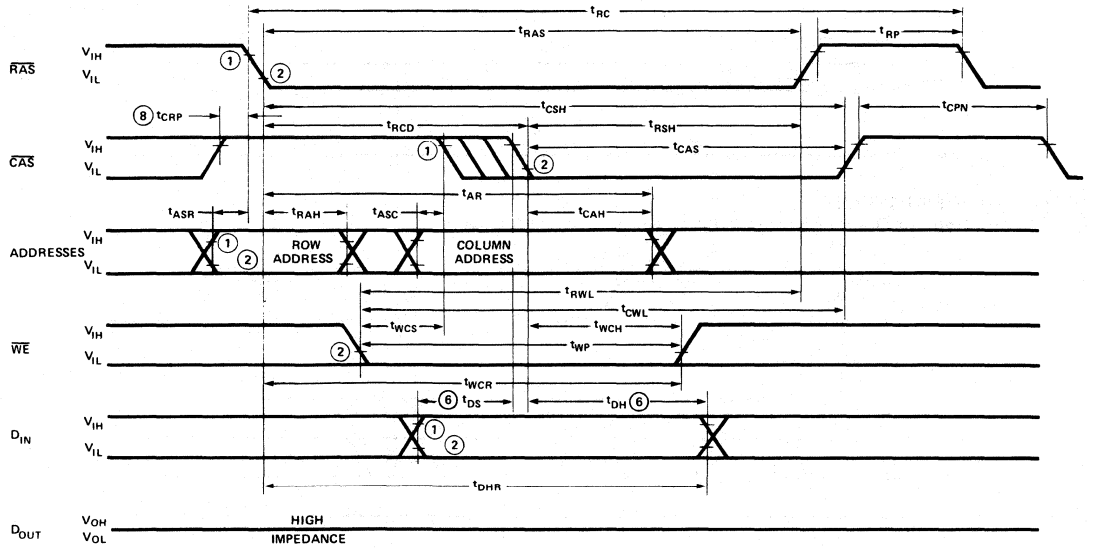

NOTES: 1,2. $V_{IH\ MIN}$ AND $V_{IL\ MAX}$ ARE REFERENCE LEVELS FOR MEASURING TIMING OF INPUT SIGNALS.
3,4. $V_{OH\ MIN}$ AND $V_{OL\ MAX}$ ARE REFERENCE LEVELS FOR MEASURING TIMING OF D_{OUT}.
5. t_{OFF} IS MEASURED TO $|I_{OUT}| \leq |I_{LO}|$.
6. t_{DS} AND t_{DH} ARE REFERENCED TO $\overline{CAS}$ OR $\overline{WE}$, WHICHEVER OCCURS LAST.
7. t_{RCH} IS REFERENCED TO THE TRAILING EDGE OF $\overline{CAS}$ OR $\overline{RAS}$, WHICHEVER OCCURS FIRST.
8. t_{CRP} REQUIREMENT IS ONLY APPLICABLE FOR $\overline{RAS}$/$\overline{CAS}$ CYCLES PRECEEDED BY A $\overline{CAS}$-ONLY CYCLE (i.e., FOR SYSTEMS WHERE $\overline{CAS}$ HAS NOT BEEN DECODED WITH $\overline{RAS}$).

WAVEFORMS

READ-MODIFY-WRITE CYCLE

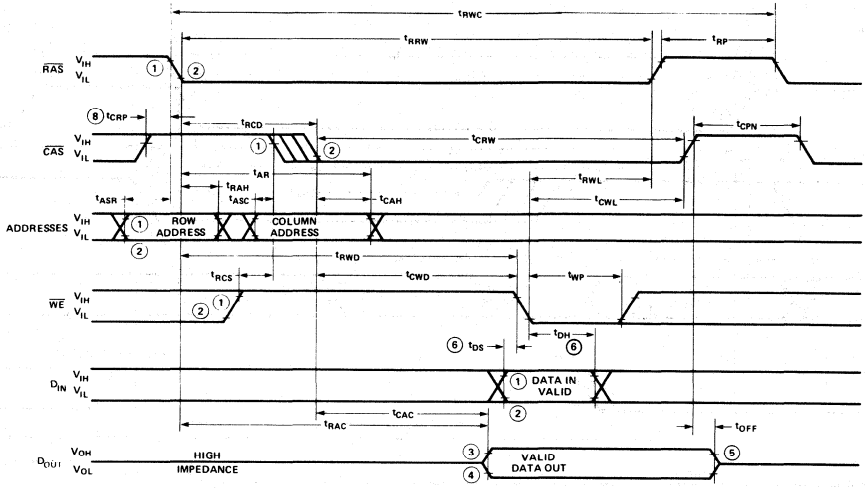

RAS-ONLY REFRESH CYCLE

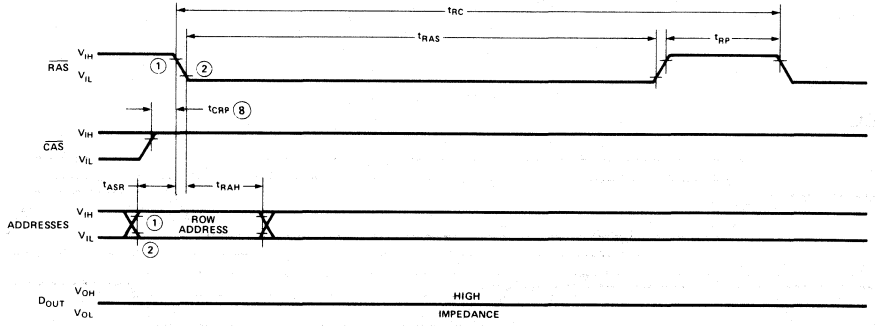

HIDDEN REFRESH CYCLE
(For Hidden Refresh Operation order 2164-15 S6491, 2164-20 S6492)

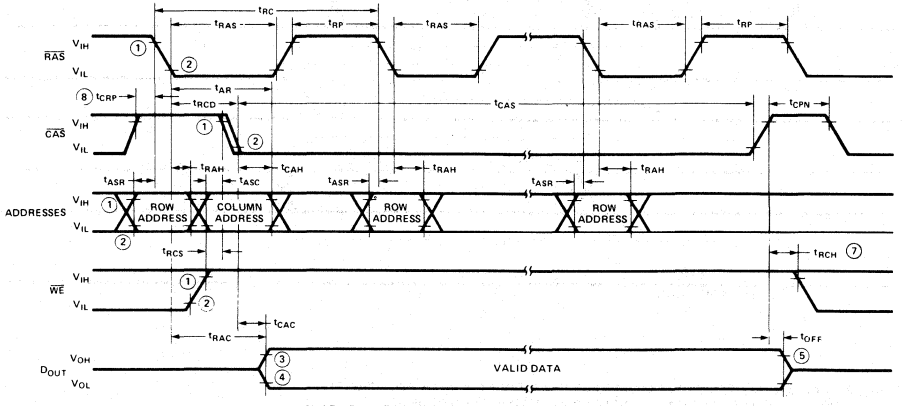

NOTES:
1,2. $V_{IH\ MIN}$ AND $V_{IL\ MAX}$ ARE REFERENCE LEVELS FOR MEASURING TIMING OF INPUT SIGNALS.
3,4. $V_{OH\ MIN}$ AND $V_{OL\ MAX}$ ARE REFERENCE LEVELS FOR MEASURING TIMING OF D_{OUT}.
5. t_{OFF} IS MEASURED TO $I_{OUT} \leq |I_{LO}|$.
6. t_{DS} AND t_{DH} ARE REFERENCED TO $\overline{CAS}$ OR $\overline{WE}$, WHICHEVER OCCURS LAST.
7. t_{RCH} IS REFERENCED TO THE TRAILING EDGE OF $\overline{CAS}$ OR $\overline{RAS}$, WHICHEVER OCCURS FIRST.
8. t_{CRP} REQUIREMENT IS ONLY APPLICABLE FOR $\overline{RAS}$/$\overline{CAS}$ CYCLES PRECEEDED BY A $\overline{CAS}$-ONLY CYCLE (i.e., FOR SYSTEMS WHERE $\overline{CAS}$ HAS NOT BEEN DECODED WITH $\overline{RAS}$).

D.C. AND A.C. CHARACTERISTICS, PAGE MODE [7,8,11]

T_A = 0°C to 70°C, V_{DD} = 5V ±10%, V_{SS} = 0V, unless otherwise noted.
(For Page Mode Operation order 2164-15 S6493, 2164-20 S6494)

Symbol	Parameter	2164-15 S6493 Min.	2164-15 S6493 Max.	2164-20 S6494 Min.	2164-20 S6494 Max.	Unit	Notes
t_{PC}	Page Mode Read or Write Cycle	TBD		TBD		ns	
t_{PCM}	Page Mode Read Modify Write	TBD		TBD		ns	
t_{CP}	$\overline{CAS}$ Precharge Time, Page Cycle	TBD		TBD		ns	
t_{RPM}	$\overline{RAS}$ Pulse Width, Page Mode	TBD		TBD		ns	
t_{CAS}	$\overline{CAS}$ Pulse Width	TBD		TBD		ns	
I_{DD4}	V_{DD} Supply Current Page Mode, Minimum t_{PC}, Minimum t_{CAS}		TBD		TBD	mA	

WAVEFORMS

PAGE MODE READ CYCLE

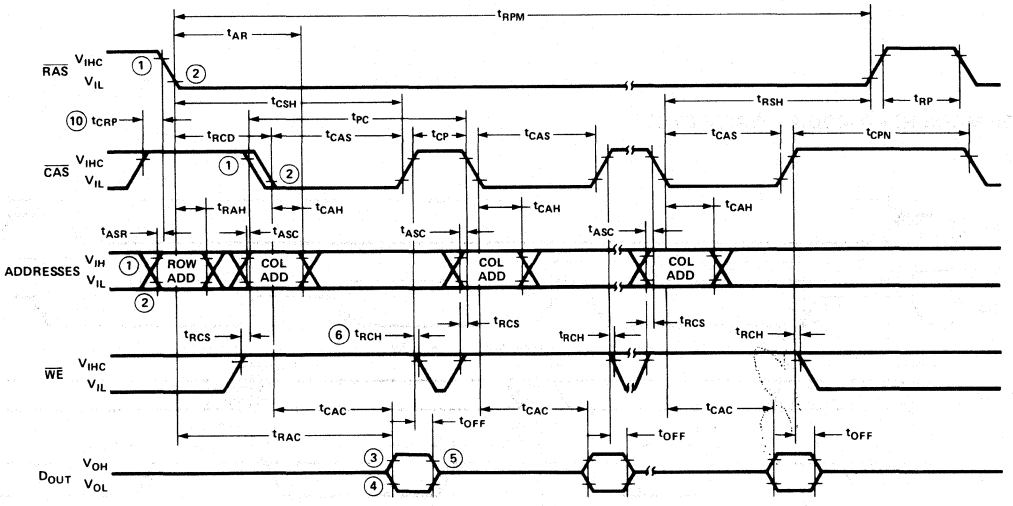

NOTES:
1,2. $V_{IH\ MIN}$ AND $V_{IL\ MAX}$ ARE REFERENCE LEVELS FOR MEASURING TIMING OF INPUT SIGNALS.
3,4. $V_{OH\ MIN}$ AND $V_{OL\ MAX}$ ARE REFERENCE LEVELS FOR MEASURING TIMING OF D_{OUT}.
5. t_{OFF} IS MEASURED TO $|I_{OUT}| \leq |I_{LO}|$.
6. t_{RCH} IS REFERENCED TO THE TRAILING EDGE OF $\overline{CAS}$ OR $\overline{RAS}$, WHICHEVER OCCURS FIRST.
7. ALL VOLTAGES REFERENCED TO V_{SS}.
8. AC CHARACTERISTIC ASSUME t_T = 5ns.
9. SEE THE TYPICAL CHARACTERISTICS SECTION FOR VALUES OF THIS PARAMETER UNDER ALTERNATE CONDITIONS.
10. t_{CRP} REQUIREMENT IS ONLY APPLICABLE FOR $\overline{RAS}$/$\overline{CAS}$ CYCLES PRECEEDED BY A $\overline{CAS}$-ONLY CYCLE (i.e., FOR SYSTEMS WHERE $\overline{CAS}$ HAS NOT BEEN DECODED WITH $\overline{RAS}$).
11. ALL PREVIOUSLY SPECIFIED A.C. AND D.C. CHARACTERISTICS ARE APPLICABLE TO THEIR RESPECTIVE PAGE MODE DEVICE (i.e., 2164-15 S6493 WILL OPERATE AS A 2164-15).

PAGE MODE WRITE CYCLE

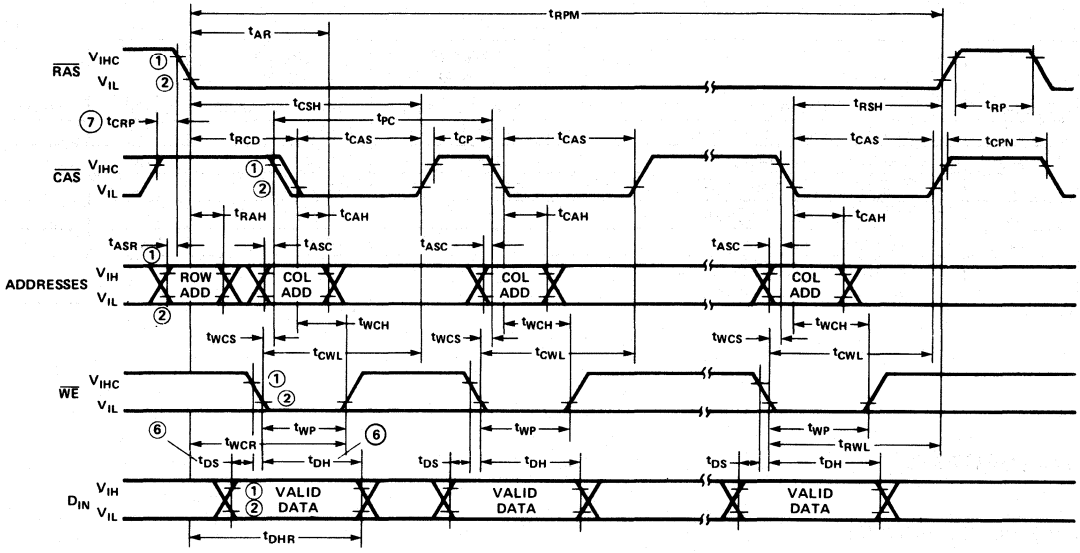

PAGE MODE READ-MODIFY-WRITE CYCLE

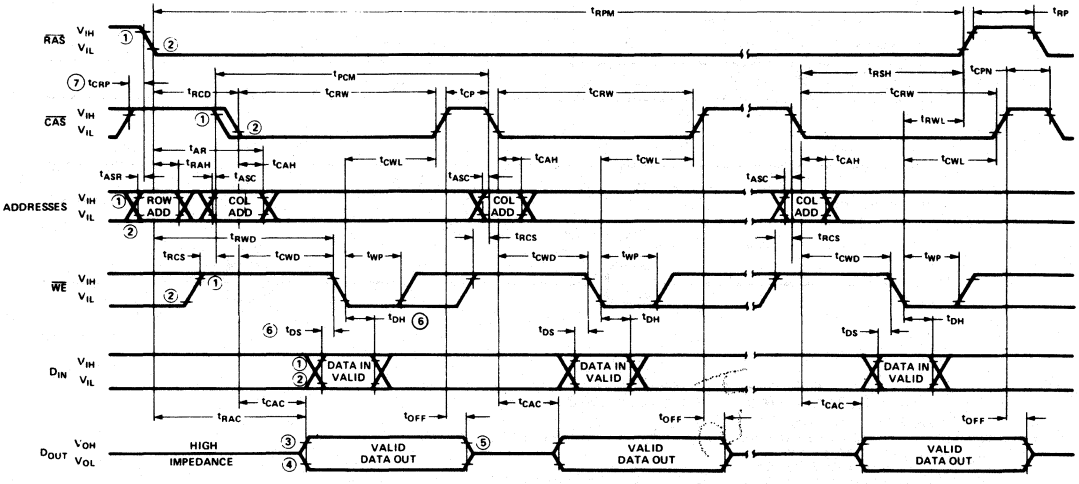

NOTES:
1,2. $V_{IH\ MIN}$ AND $V_{IL\ MAX}$ ARE REFERENCE LEVELS FOR MEASURING TIMING OF INPUT SIGNALS.
3,4. $V_{OH\ MIN}$ AND $V_{OL\ MAX}$ ARE REFERENCE LEVELS FOR MEASURING TIMING OF D_{OUT}.
5. t_{OFF} IS MEASURED TO I_{OUT} $|I_{LO}|$.
6. t_{DS} AND t_{DH} ARE REFERENCED TO $\overline{CAS}$ OR $\overline{WE}$, WHICHEVER OCCURS LAST.
7. t_{RCH} IS REFERENCED TO THE TRAILING EDGE OF $\overline{CAS}$ OR $\overline{RAS}$, WHICHEVER OCCURS FIRST.
8. t_{CRP} REQUIREMENT IS ONLY APPLICABLE FOR $\overline{RAS}$/$\overline{CAS}$ CYCLES PRECEEDED BY A $\overline{CAS}$-ONLY CYCLE (i.e., FOR SYSTEMS WHERE $\overline{CAS}$ HAS NOT BEEN DECODED WITH $\overline{RAS}$).

DEVICE DESCRIPTION

The Intel® 2164 is produced with HMOS, a high performance MOS technology which incorporates on-chip substrate bias generation. This process, combined with new circuit design concepts, allows the 2164 to operate from a single + 5V power supply, eliminating the + 12V and − 5V requirements. Pin 1 is not connected, which allows P.C.B. layout for future higher density memory generations.

The 2164 is functionally compatible with the 2118, the industry standard 5V-only 16-pin 16K dynamic RAM. This allows simple upgrade from 16K to 64K density merely by adding one additional multiplexed address line.

$\overline{RAS}/\overline{CAS}$ TIMING

$\overline{RAS}$ and $\overline{CAS}$ have minimum pulse widths as defined by t_{RAS} and t_{CAS} respectively. These minimum pulse widths must be maintained for proper device operation and data integrity. A cycle, once begun by bringing $\overline{RAS}$ and/or $\overline{CAS}$ low must not be ended or aborted prior to fulfilling the minimum clock signal pulse width(s). A new cycle can not begin until the minimum precharge time, t_{RP}, has been met.

READ CYCLE

A Read cycle is performed by maintaining Write Enable ($\overline{WE}$) high during a $\overline{RAS}/\overline{CAS}$ operation. The output pin of a selected device will remain in a high impedance state until valid data appears at the output at access time.

WRITE CYCLE

A Write cycle is performed by taking $\overline{WE}$ low during a $\overline{RAS}/\overline{CAS}$ operation. Data Input (D_{IN}) must be valid relative to the negative edge of $\overline{WE}$ or $\overline{CAS}$, whichever transition occurs last.

DATA OUTPUT OPERATION

The 2164 Data Output (D_{OUT}), which has three-state capability, is controlled by $\overline{CAS}$. During $\overline{CAS}$ high state ($\overline{CAS}$ at V_{IH}) the output is in the high impedance state. The following table summarizes the D_{OUT} state for various types of cycles.

Intel 2164 Data Output Operation for Various Types of Cycles

Type of Cycle	D_{OUT} State
Read Cycle	Data From Addressed Memory Cell
Early Write Cycle	HI-Z
$\overline{RAS}$-Only Refresh Cycle	HI-Z
$\overline{CAS}$-Only Cycle	HI-Z
Read/Modify/Write Cycle	Data From Addressed Memory Cell
Delayed Write Cycle	Indeterminate

REFRESH CYCLES

There are 512 sense amplifiers, each controlling 128 storage cells. Thus the 2164 is refreshed in 128 cycles. Any combination of the seven (7) low order Row Addresses, RA_0 through RA_6, will select one row of data cells (512 cells/row). Row address 7 is not critical during a refresh operation and can be either high or low. Although any cycle, Read, Write, Read-Modify-Write, or $\overline{RAS}$-only, will refresh the memory, the $\overline{RAS}$-only cycle is recommended, since it allows about 20% system power reduction over the other types of cycles.

HIDDEN REFRESH

An optional feature of the 2164 is that refresh cycles may be performed while maintaining valid data at the output pin. This is referred to as Hidden Refresh. Hidden Refresh is performed by holding $\overline{CAS}$ at V_{IL} and taking $\overline{RAS}$ high and after a specified precharge period (t_{RP}), executing a "$\overline{RAS}$-Only" refresh cycle, but with $\overline{CAS}$ held low (see Figure below).

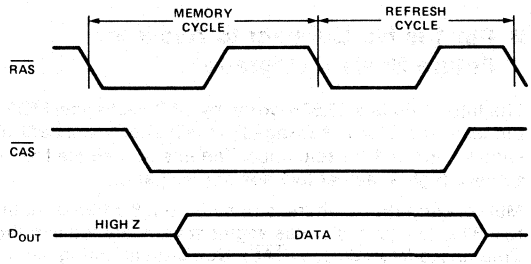

This feature allows a refresh cycle to be "hidden" among data cycles without affecting the data availability.

POWER ON

After the application of the V_{DD} supply, or after extended periods of bias (greater than 2 ms) without clocks, the device requires a minimum of eight (8) initialization cycles (any combination of cycles containing RAS clock such as $\overline{RAS}$-only refresh) prior to normal operation.

The V_{DD} current (I_{DD}) requirement of the 2164 during power on is dependent upon the input levels of $\overline{RAS}$ and $\overline{CAS}$. If the input levels of these clocks are at V_{IH} or V_{DD}, whichever is lower, the I_{DD} requirement per device is I_{DD1} (I_{DD} standby). If the input levels for these clocks are lower than V_{IH} or V_{DD} the I_{DD} requirements will be greater than I_{DD1}. For large systems, this current requirement for I_{DD} could be substantially more than that for which the system has been designed. A system which has been designed assuming the majority of devices to be operating in the refresh/standby mode, may produce sufficient I_{DD} loading such that the power supply may current limit. To assure that the system will not experience such loading during power on, a pullup resistor for each clock input to V_{DD} to maintain the non-selected current level (I_{DD1}) for the power supply is recommended.

PRELIMINARY

2164-25
65,536 x 1 BIT DYNAMIC RAM

	2164-25
Maximum Access Time (ns)	250
Read, Write Cycle (ns)	465
Read-Modify-Write Cycle (ns)	530

- Industry Standard 16-pin DIP
- HMOS Technology
- Single +5V Supply, ±10% Tolerance
- All Inputs, Including Clocks, TTL Compatible
- Pin 1 is No Connect to Allow for Future System Upgrade
- 128 Refresh Cycles/2 ms $\overline{RAS}$-only Refresh
- Non-Latched Output is Three-State TTL Compatible
- Compatible with 2118
- Inputs Allow Negative Overshoot, V_{IL} MIN = -2V
- Page Mode and Hidden Refresh Capability

The Intel 2164 is a 65,536 words by 1-bit N-channel MOS dynamic RAM fabricated in Intel's production proven HMOS process. The 2164 is packaged in the industry standard 16-pin DIP and is designed to operate with a single + 5V power supply, with ± 10% tolerance. The use of a single transistor cell and advanced dynamic circuitry enable the 2164 to achieve high speed at low power dissipation.

Multiplexing the 16 address bits into the 8 address input pins allows the 2164 to achieve high packaging density. The two 8-bit TTL level address segments are latched into the 2164 by the two TTL clocks, Row Address Strobe ($\overline{RAS}$) and Column Address Strobe ($\overline{CAS}$). Non-critical timing requirements for the $\overline{RAS}$ and $\overline{CAS}$ clocks allow the use of the address multiplexing technique while maintaining high performance.

The non-latched, three state, TTL compatible data output is controlled by $\overline{CAS}$, independent of $\overline{RAS}$. After a valid read or read-modify-write cycle, data is held on the data output pin by holding $\overline{CAS}$ low. The data output is returned to a high impedance state, by returning $\overline{CAS}$ to a high state. Hidden refresh capability allows the device to maintain data at the output by holding $\overline{CAS}$ low while $\overline{RAS}$ is used to execute $\overline{RAS}$-only refresh cycles.

Refresh is required for data retention in one transistor storage cells. Refreshing is accomplished by performing $\overline{RAS}$-only cycles, hidden refresh cycles, or normal read or write cycles on the 128 address combinations of addresses A_0 through A_6, during a 2ms period. Address input A_7 is a don't care during these refresh cycles. A write cycle will refresh stored data on all bits of the selected row except the bit which is addressed.

PIN CONFIGURATION

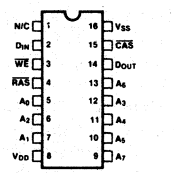

LOGIC SYMBOL

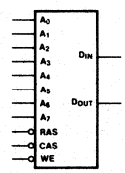

A_0-A_7	ADDRESS INPUTS
$\overline{CAS}$	COLUMN ADDRESS STROBE
D_{IN}	DATA IN
D_{OUT}	DATA OUT
$\overline{WE}$	WRITE ENABLE
$\overline{RAS}$	ROW ADDRESS STROBE
V_{DD}	POWER (+ 5V)
V_{SS}	GROUND

BLOCK DIAGRAM

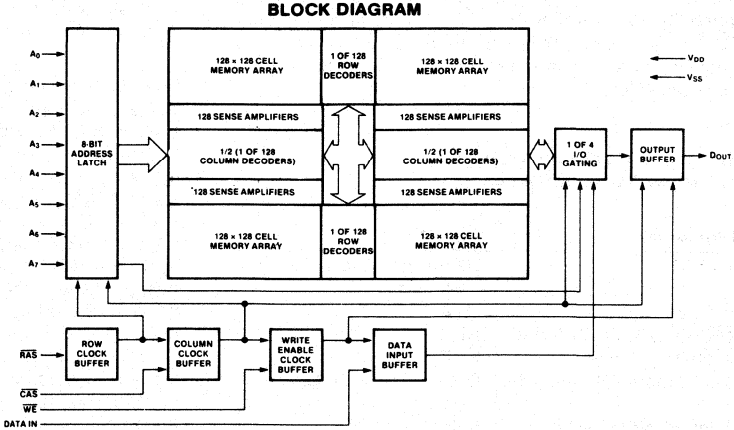

ABSOLUTE MAXIMUM RATINGS*

Ambient Temperature Under Bias .... −10°C to +80°C
Storage Temperature ..... −65°C to +150°C
Voltage on Any Pin Relative to V_{SS} 7.5V
Data Out Current 50mA
Power Dissipation 1.0W

COMMENT:

Stresses above those listed under "Absolute Maximum Rating" may cause permanent damage to the device. This is a stress rating only and functional operation of the device at these or at any other condition above those indicated in the operational sections of this specification is not implied. Exposure to absolute maximum rating conditions for extended periods may affect device reliability.

D.C. AND OPERATING CHARACTERISTICS[1]

T_A = 0°C to 70°C, V_{DD} = 5V ±10%, V_{SS} = 0V, unless otherwise noted.

Symbol	Parameter	Limits Min.	Typ.[2]	Max.	Unit	Test Conditions	Notes
$\|I_{LI}\|$	Input Load Current (any input)			10	µA	V_{IN}=V_{SS} to V_{DD}	
$\|I_{LO}\|$	Output Leakage Current for High Impedance State			10	µA	Chip Deselected: $\overline{CAS}$ at V_{IH}, V_{OUT} = 0 to 5.5V	
I_{DD1}	V_{DD} Supply Current, Standby		3	5	mA	$\overline{CAS}$ and $\overline{RAS}$ at V_{IH}	
I_{DD2}	V_{DD} Supply Current, Operating			50	mA	2164-25, t_{RC} = t_{RCMIN}	3
I_{DD3}	V_{DD} Supply Current, $\overline{RAS}$-Only Cycle			36	mA	2164-25, t_{RC} = t_{RCMIN}	
I_{DD5}	V_{DD} Supply Current, Standby, Output Enabled			7	mA	$\overline{CAS}$ at V_{IL}, $\overline{RAS}$ at V_{IH}	3
V_{IL}	Input Low Voltage (all inputs)	-2.0		0.8	V		
V_{IH}	Input High Voltage (all inputs)	2.4		7.0	V		
V_{OL}	Output Low Voltage			0.4	V	I_{OL} = 4.2mA	
V_{OH}	Output High Voltage	2.4			V	I_{OH} = -5mA	

NOTES:
1. All voltages referenced to V_{SS}.
2. Typical values are for T_A = 25°C and nominal supply voltages.
3. I_{DD} is dependent on output loading when the device output is selected. Specified $I_{DD\ MAX}$ is measured with the output open.

CAPACITANCE[1]

T_A = 25°C, V_{DD} = 5V ± 10%, V_{SS} = 0V, unless otherwise noted.

Symbol	Parameter	Typ.	Max.	Unit
C_{11}	Address, Data In	3	6	pF
C_{12}	$\overline{WE}$, Data Out	4	7	pF
C_{13}	$\overline{RAS}$, $\overline{CAS}$	5	8	pF

NOTES:
1. Capacitance measured with Boonton Meter or effective capacitance calculated from the equation:
$C = \frac{I\Delta t}{\Delta V}$ with ΔV equal to 3 volts and power supplies at nominal levels.

A.C. CHARACTERISTICS[1,2,3]

T_A = 0°C to 70°C, V_{DD} = 5V ±10%, V_{SS} = 0V, unless otherwise noted.

READ, WRITE, READ-MODIFY-WRITE AND REFRESH CYCLES

Symbol	Parameter	2164-25 Min.	2164-25 Max.	Unit	Notes
t_{RAC}	Access Time from $\overline{RAS}$		250	ns	4,5
t_{CAC}	Access Time from $\overline{CAS}$		135	ns	4,5,6
t_{REF}	Time Between Refresh		2	ms	
t_{RP}	$\overline{RAS}$ Precharge Time	175		ns	
t_{CPN}	$\overline{CAS}$ Precharge Time (Non-Page Cycles)	45		ns	
t_{CRP}	$\overline{CAS}$ to $\overline{RAS}$ Precharge Time	−20		ns	
t_{RCD}	$\overline{RAS}$ to $\overline{CAS}$ Delay Time	55	115	ns	7
t_{RSH}	$\overline{RAS}$ Hold Time	135		ns	
t_{CSH}	$\overline{CAS}$ Hold Time	250		ns	
t_{ASR}	Row Address Set-Up Time	0		ns	
t_{RAH}	Row Address Hold Time	45		ns	
t_{ASC}	Column Address Set-Up Time	0		ns	
t_{CAH}	Column Address Hold Time	55		ns	
t_{AR}	Column Address Hold Time, to $\overline{RAS}$	170		ns	
t_T	Transition Time (Rise and Fall)	3	50	ns	8
t_{OFF}	Output Buffer Turn Off Delay	0	60	ns	
READ AND REFRESH CYCLES					
t_{RC}	Random Read Cycle Time	465		ns	
t_{RAS}	$\overline{RAS}$ Pulse Width	250	10,000	ns	
t_{CAS}	$\overline{CAS}$ Pulse Width	135	10,000	ns	
t_{RCS}	Read Command Set-Up Time	0		ns	
t_{RCH}	Read Command Hold Time	0		ns	
WRITE CYCLE					
t_{RC}	Random Write Cycle Time	465		ns	
t_{RAS}	$\overline{RAS}$ Pulse Width	250	10,000	ns	
t_{CAS}	$\overline{CAS}$ Pulse Width	135	10,000	ns	
t_{WCS}	Write Command Set-Up Time	0		ns	9
t_{WCH}	Write Command Hold Time	50		ns	
t_{WCR}	Write Command Hold Time, to $\overline{RAS}$	165		ns	
t_{WP}	Write Command Pulse Width	50		ns	
t_{RWL}	Write Command to $\overline{RAS}$ Lead Time	60		ns	
t_{CWL}	Write Command to $\overline{CAS}$ Lead Time	60		ns	
t_{DS}	Data-In Set-Up Time	0		ns	
t_{DH}	Data-In Hold Time	55		ns	
t_{DHR}	Data-In Hold Time, to $\overline{RAS}$	170		ns	
READ-MODIFY-WRITE CYCLE					
t_{RWC}	Read-Modify-Write Cycle Time	470		ns	
t_{RRW}	RMW Cycle $\overline{RAS}$ Pulse Width	285		ns	
t_{CRW}	RMW Cycles $\overline{CAS}$ Pulse Width	170		ns	
t_{RWD}	$\overline{RAS}$ to $\overline{WE}$ Delay	220		ns	9
t_{CWD}	$\overline{CAS}$ to $\overline{WE}$ Delay	105		ns	9

NOTES:
1. All voltages are referenced to V_{SS}.
2. Eight cycles are required after power-up or prolonged periods (greater than 2 ms) of $\overline{RAS}$ inactivity before proper device operation is achieved. Any 8 cycles which perform refresh are adequate for this purpose.
3. A.C. characteristics assume t_T = 5 ns.
4. Assume that $t_{RCD} \leq t_{RCD}$ (max.). If t_{RCD} is greater than t_{RCD} (max.) then t_{RAC} will increase by the amount that t_{RCD} exceeds t_{RCD} (max.).
5. Load = 2 TTL loads and 100 pF.
6. Assumes $t_{RCD} \geq t_{RCD}$ (max.).
7. t_{RCD} (max.) is specified as a reference point only; if t_{RCD} is less than t_{RCD} (max.), access time is t_{RAC}; if t_{RCD} is greater than t_{RCD} (max.), access time is $t_{RCD} + t_{CAC}$.
8. t_T is measured between V_{IH} (min.) and V_{IL} (max.).
9. t_{WCS}, t_{CWD} and t_{RWD} are specified as reference points only; if $t_{WCS} \geq t_{WCS}$ (min.), the cycle is an early write cycle and the data-out pin will remain high impedance throughout the entire cycle; if $t_{CWD} \geq t_{CWD}$ (min.) and $t_{RWD} \geq t_{RWD}$ (min.), the cycle is a read-modify-write cycle and the data out will contain the data read from the selected address. If neither of the above conditions is satisfied, the condition of the data out is indeterminate.

WAVEFORMS

READ CYCLE

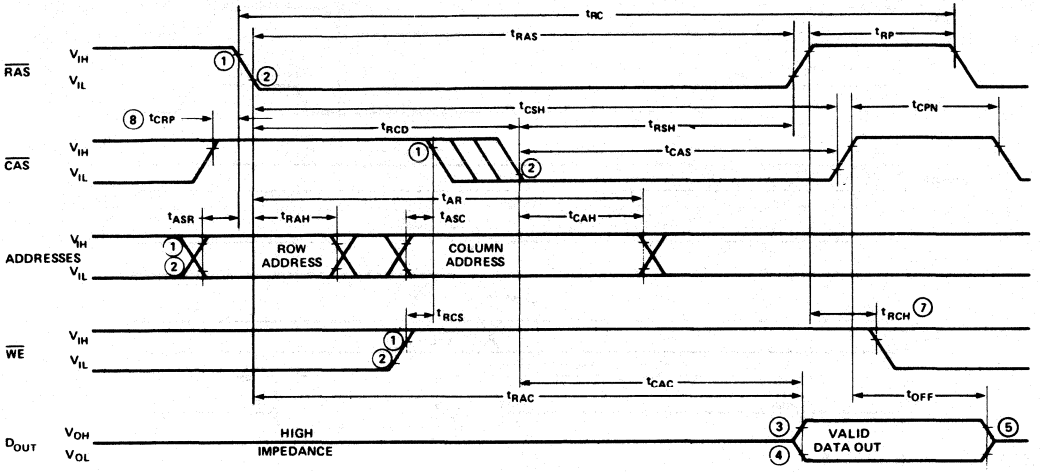

WRITE CYCLE

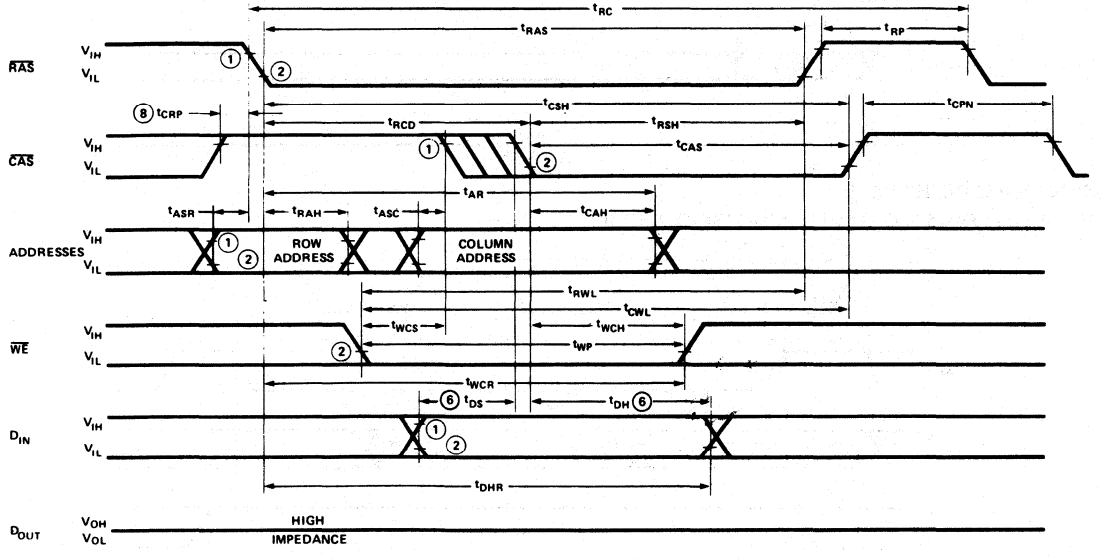

NOTES:
1,2. $V_{IH\ MIN}$ AND $V_{IL\ MAX}$ ARE REFERENCE LEVELS FOR MEASURING TIMING OF INPUT SIGNALS.
3,4. $V_{OH\ MIN}$ AND $V_{OL\ MAX}$ ARE REFERENCE LEVELS FOR MEASURING TIMING OF D_{OUT}.
5. t_{OFF} IS MEASURED TO $|I_{OUT}| \leq |I_{LO}|$.
6. t_{DS} AND t_{DH} ARE REFERENCED TO $\overline{CAS}$ OR $\overline{WE}$, WHICHEVER OCCURS LAST.
7. t_{RCH} IS REFERENCED TO THE TRAILING EDGE OF $\overline{CAS}$ OR $\overline{RAS}$, WHICHEVER OCCURS FIRST.
8. t_{CRP} REQUIREMENT IS ONLY APPLICABLE FOR $\overline{RAS}/\overline{CAS}$ CYCLES PRECEEDED BY A $\overline{CAS}$-ONLY CYCLE (i.e., FOR SYSTEMS WHERE $\overline{CAS}$ HAS NOT BEEN DECODED WITH $\overline{RAS}$).

WAVEFORMS

READ-MODIFY-WRITE CYCLE

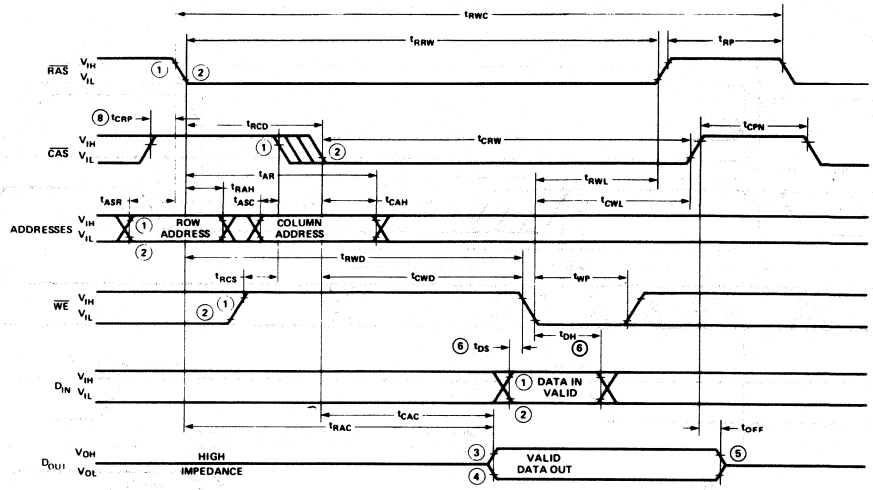

RAS-ONLY REFRESH CYCLE

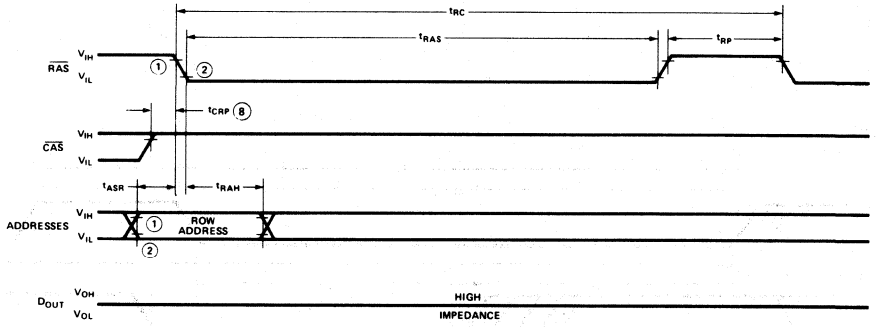

HIDDEN REFRESH CYCLE

(For Hidden Refresh Operation order 2164-25, S6496)

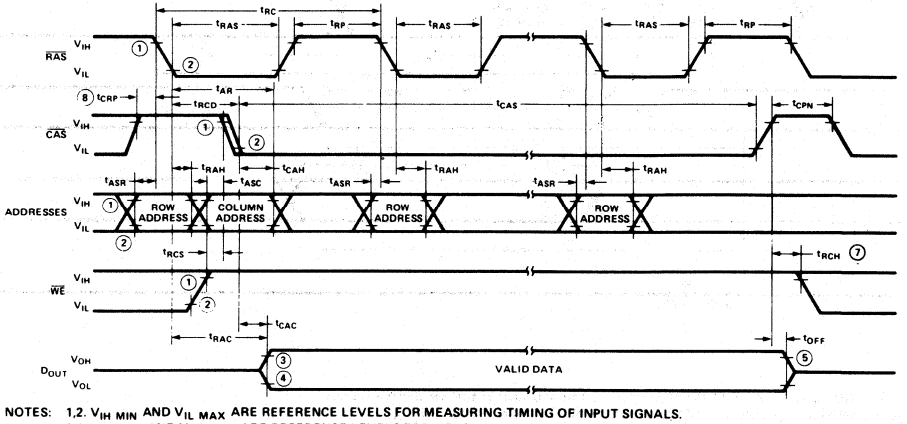

NOTES:
1,2. $V_{IH\ MIN}$ AND $V_{IL\ MAX}$ ARE REFERENCE LEVELS FOR MEASURING TIMING OF INPUT SIGNALS.
3,4. $V_{OH\ MIN}$ AND $V_{OL\ MAX}$ ARE REFERENCE LEVELS FOR MEASURING TIMING OF D_{OUT}.
5. t_{OFF} IS MEASURED TO $|I_{OUT}| \leq |I_{LO}|$.
6. t_{DS} AND t_{DH} ARE REFERENCED TO $\overline{CAS}$ OR $\overline{WE}$, WHICHEVER OCCURS LAST.
7. t_{RCH} IS REFERENCED TO THE TRAILING EDGE OF $\overline{CAS}$ OR $\overline{RAS}$, WHICHEVER OCCURS FIRST.
8. t_{CRP} REQUIREMENT IS ONLY APPLICABLE FOR $\overline{RAS}$/$\overline{CAS}$ CYCLES PRECEEDED BY A $\overline{CAS}$-ONLY CYCLE (i.e., FOR SYSTEMS WHERE $\overline{CAS}$ HAS NOT BEEN DECODED WITH $\overline{RAS}$).

D.C. AND A.C. CHARACTERISTICS, PAGE MODE [7,8,11]

T_A = 0°C to 70°C, V_{DD} = 5V ±10%, V_{SS} = 0V, unless otherwise noted.

(For Page Mode Operation order 2164-25, S6495)

Symbol	Parameter	2164-25, S6495 Min.	Max.	Unit	Notes
t_{PC}	Page Mode Read or Write Cycle	TBD		ns	
t_{PCM}	Page Mode Read-Modify-Write	TBD		ns	
t_{CP}	$\overline{CAS}$ Precharge Time, Page Cycle	TBD		ns	
t_{RPM}	$\overline{RAS}$ Pulse Width, Page Mode	TBD		ns	
t_{CAS}	$\overline{CAS}$ Pulse Width	TBD		ns	
I_{DD4}	V_{DD} Supply Current Page Mode, Minimum t_{PC}, Minimum t_{CAS}		TBD	mA	

WAVEFORMS

PAGE MODE READ CYCLE

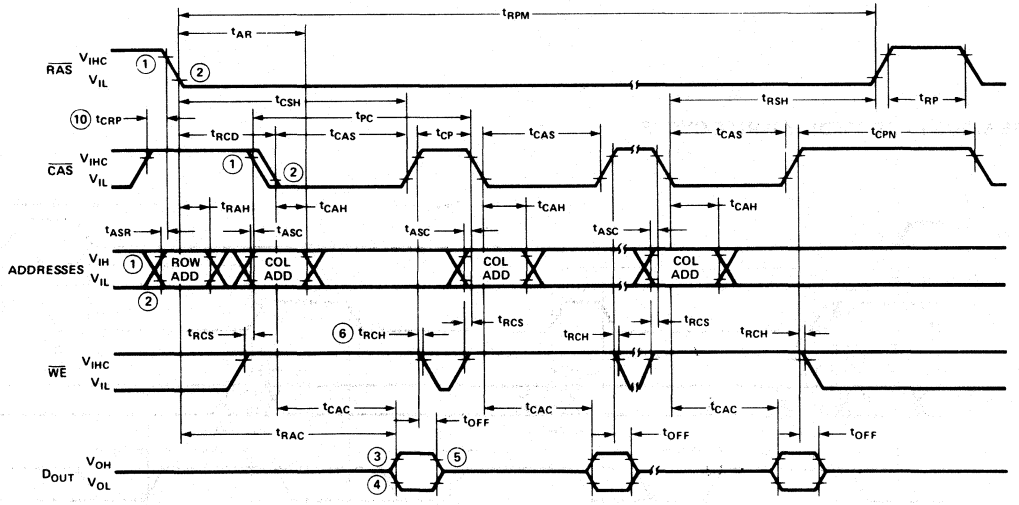

NOTES:
1,2. $V_{IH\ MIN}$ AND $V_{IL\ MAX}$ ARE REFERENCE LEVELS FOR MEASURING TIMING OF INPUT SIGNALS.
3,4. $V_{OH\ MIN}$ AND $V_{OL\ MAX}$ ARE REFERENCE LEVELS FOR MEASURING TIMING OF D_{OUT}.
5. t_{OFF} IS MEASURED TO $|I_{OUT}| = |I_{LO}|$.
6. t_{RCH} IS REFERENCED TO THE TRAILING EDGE OF $\overline{CAS}$ OR $\overline{RAS}$, WHICHEVER OCCURS FIRST.
7. ALL VOLTAGES REFERENCED TO V_{SS}.
8. AC CHARACTERISTIC ASSUME t_T = 5ns.
9. SEE THE TYPICAL CHARACTERISTICS SECTION FOR VALUES OF THIS PARAMETER UNDER ALTERNATE CONDITIONS.
10. t_{CRP} REQUIREMENT IS ONLY APPLICABLE FOR $\overline{RAS}$/$\overline{CAS}$ CYCLES PRECEEDED BY A $\overline{CAS}$-ONLY CYCLE (i.e., FOR SYSTEMS WHERE $\overline{CAS}$ HAS NOT BEEN DECODED WITH $\overline{RAS}$).
11. ALL PREVIOUISLY SPECIFIED A.C. AND D.C. CHARACTERISTICS ARE APPLICABLE TO THEIR RESPECTIVE PAGE MODE DEVICE (i.e., 2164-25, S6493 WILL OPERATE AS A 2164-25).

PAGE MODE WRITE CYCLE

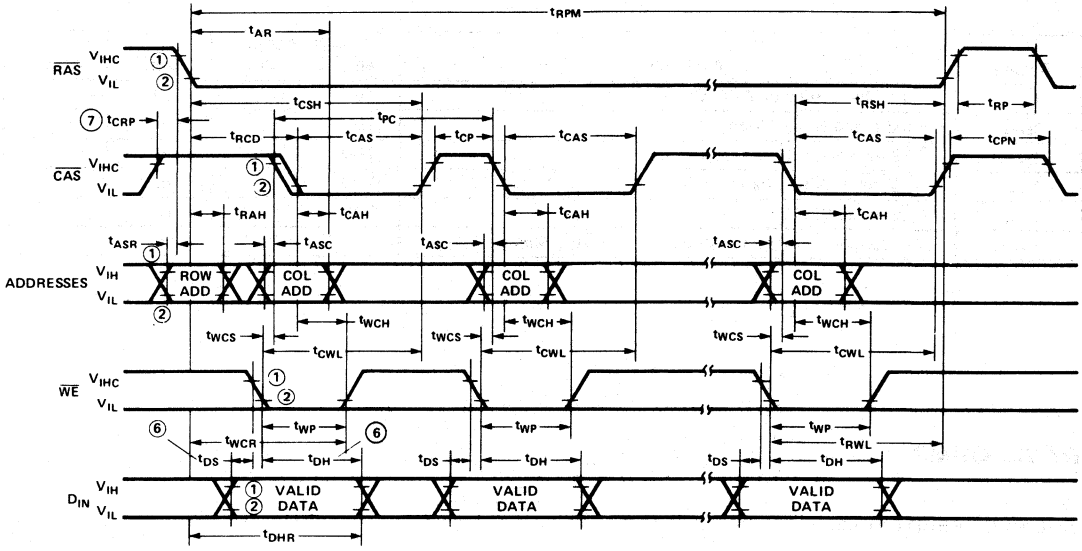

PAGE MODE READ-MODIFY-WRITE CYCLE

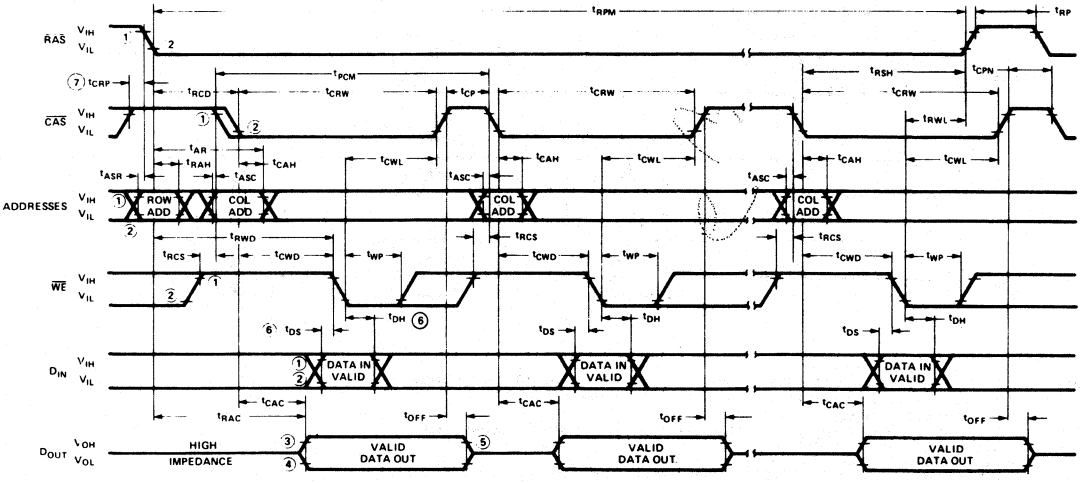

NOTES: 1,2. $V_{IH\ MIN}$ AND $V_{IL\ MAX}$ ARE REFERENCE LEVELS FOR MEASURING TIMING OF INPUT SIGNALS.
3,4. $V_{OH\ MIN}$ AND $V_{OL\ MAX}$ ARE REFERENCE LEVELS FOR MEASURING TIMING OF D_{OUT}.
5. t_{OFF} IS MEASURED TO I_{OUT} = $|I_{LO}|$.
6. t_{DS} AND t_{DH} ARE REFERENCED TO $\overline{CAS}$ OR $\overline{WE}$, WHICHEVER OCCURS LAST.
7. t_{RCH} IS REFERENCED TO THE TRAILING EDGE OF $\overline{CAS}$ OR $\overline{RAS}$, WHICHEVER OCCURS FIRST.
8. t_{CRP} REQUIREMENT IS ONLY APPLICABLE FOR $\overline{RAS}$/$\overline{CAS}$ CYCLES PRECEEDED BY A $\overline{CAS}$-ONLY CYCLE (i.e., FOR SYSTEMS WHERE $\overline{CAS}$ HAS NOT BEEN DECODED WITH $\overline{RAS}$).

DEVICE DESCRIPTION

The Intel® 2164 is produced with HMOS, a high performance MOS technology which incorporates on-chip substrate bias generation. This process, combined with new circuit design concepts, allows the 2164 to operate from a single + 5V power supply, eliminating the + 12V and − 5V requirements. Pin 1 is not connected, which allows P.C.B. layout for future higher density memory generations.

The 2164 is functionally compatible with the 2118, the industry standard 5V-only 16-pin 16K dynamic RAM. This allows simple upgrade from 16K to 64K density merely by adding one additional multiplexed address line.

$\overline{RAS}/\overline{CAS}$ TIMING

$\overline{RAS}$ and $\overline{CAS}$ have minimum pulse widths as defined by t_{RAS} and t_{CAS} respectively. These minimum pulse widths must be maintained for proper device operation and data integrity. A cycle, once begun by bringing $\overline{RAS}$ and/or $\overline{CAS}$ low must not be ended or aborted prior to fulfilling the minimum clock signal pulse width(s). A new cycle can not begin until the minimum precharge time, t_{RP}, has been met.

READ CYCLE

A Read cycle is performed by maintaining Write Enable ($\overline{WE}$) high during a $\overline{RAS}/\overline{CAS}$ operation. The output pin of a selected device will remain in a high impedance state until valid data appears at the output at access time.

WRITE CYCLE

A Write cycle is performed by taking $\overline{WE}$ low during a $\overline{RAS}/\overline{CAS}$ operation. Data Input (D_{IN}) must be valid relative to the negative edge of $\overline{WE}$ or $\overline{CAS}$, whichever transition occurs last.

DATA OUTPUT OPERATION

The 2164 Data Output (D_{OUT}), which has three-state capability, is controlled by $\overline{CAS}$. During $\overline{CAS}$ high state ($\overline{CAS}$ at V_{IH}) the output is in the high impedance state. The following table summarizes the D_{OUT} state for various types of cycles.

Intel 2164 Data Output Operation for Various Types of Cycles

Type of Cycle	D_{OUT} State
Read Cycle	Data From Addressed Memory Cell
Early Write Cycle	HI-Z
$\overline{RAS}$-Only Refresh Cycle	HI-Z
$\overline{CAS}$-Only Cycle	HI-Z
Read/Modify/Write Cycle	Data From Addressed Memory Cell
Delayed Write Cycle	Indeterminate

REFRESH CYCLES

There are 512 sense amplifiers, each controlling 128 storage cells. Thus the 2164 is refreshed in 128 cycles. Any combination of the seven (7) low order Row Addresses, RA_0 through RA_6, will select one row of data cells (512 cells/row). Row address 7 is not critical during a refresh operation and can be either high or low. Although any cycle, Read, Write, Read-Modify-Write, or $\overline{RAS}$-only, will refresh the memory, the $\overline{RAS}$-only cycle is recommended, since it allows about 20% system power reduction over the other types of cycles.

HIDDEN REFRESH

An optional feature of the 2164 is that refresh cycles may be performed while maintaining valid data at the output pin. This is referred to as Hidden Refresh. Hidden Refresh is performed by holding $\overline{CAS}$ at V_{IL} and taking $\overline{RAS}$ high and after a specified precharge period (t_{RP}), executing a "$\overline{RAS}$-Only" refresh cycle, but with $\overline{CAS}$ held low (see Figure below).

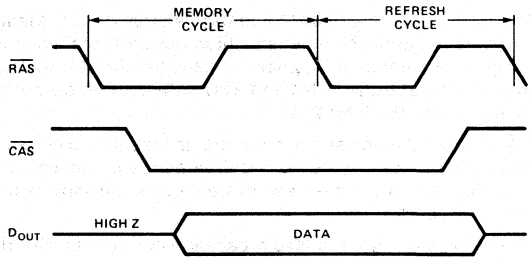

This feature allows a refresh cycle to be "hidden" among data cycles without affecting the data availability.

POWER ON

After the application of the V_{DD} supply, or after extended periods of bias (greater than 2 ms) without clocks, the device requires a minimum of eight (8) initialization cycles (any combination of cycles containing RAS clock such as $\overline{RAS}$-only refresh) prior to normal operation.

The V_{DD} current (I_{DD}) requirement of the 2164 during power on is dependent upon the input levels of $\overline{RAS}$ and $\overline{CAS}$. If the input levels of these clocks are at V_{IH} or V_{DD}, whichever is lower, the I_{DD} requirement per device is I_{DD1} (I_{DD} standby). If the input levels for these clocks are lower than V_{IH} or V_{DD} the I_{DD} requirements will be greater than I_{DD1}. For large systems, this current requirement for I_{DD} could be substantially more than that for which the system has been designed. A system which has been designed assuming the majority of devices to be operating in the refresh/standby mode, may produce sufficient I_{DD} loading such that the power supply may current limit. To assure that the system will not experience such loading during power on, a pullup resistor for each clock input to V_{DD} to maintain the non-selected current level (I_{DD1}) for the power supply is recommended.

PRELIMINARY

2167
HIGH SPEED 16,384 x 1 BIT STATIC RAM

	2167-55	2167-70	2167L-70	2167-10
Max. Access Time (ns)	55	70	70	100
Max. Active Current (mA)	125	125	90	90
Max. Standby Current (mA)	40	40	30	30

- 2141/2147 Upgrade
- Double Poly HMOS II Technology
- Completely Static Memory — No Clock or Timing Strobe Required
- Equal Access and Cycle Times
- Single +5V Supply
- Automatic Power Down
- 0.8-2.0V Output Timing Reference Levels
- High Density 20-Pin Package
- Directly TTL Compatible — All Inputs and Output
- Separate Data Input and Output
- Three-State Output

The Intel® 2167 is a 16,384-bit static Random Access Memory organized as 16,384 words by 1 bit. This memory is fabricated using Intel's high-density, high-performance technology—Double Poly HMOS II. This state of the art technology brings high-density to high-performance static RAMs. The design of the 2167 offers a 4x density improvement over the industry standard 2141 and 2147 with compatible performance. The 2167 offers the automatic power-down feature pioneered by the Intel 2147.

$\overline{CS}$ controls the power-down feature. In less than a cycle time after $\overline{CS}$ goes high (deselecting the 2167), the part automatically reduces its power requirements and remains in this low power standby mode as long as $\overline{CS}$ remains high. This device feature results in system power savings as great as 70% in larger systems where the majority of devices are deselected.

The 2167 is placed in a 20-pin package configured with the industry standard 16K x 1 pinout, offering the industry's highest density 16K static RAM. It is directly TTL compatible in all respects: inputs, output, and a single +5V supply. The data is read out nondestructively and has the same polarity as the input data. A data input and a separate three-state output are used.

LOGIC SYMBOL

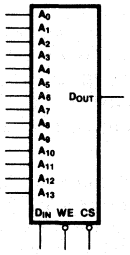

PIN CONFIGURATION

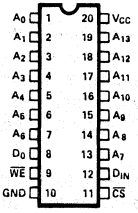

BLOCK DIAGRAM

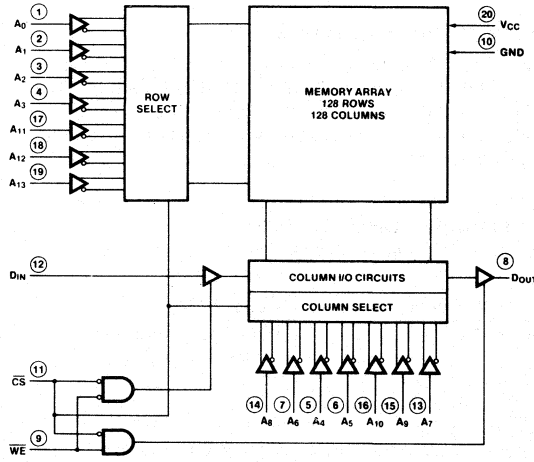

PIN NAMES

A_0–A_{13}	ADDRESS INPUTS	V_{CC}	POWER (+5V)
$\overline{WE}$	WRITE ENABLE	GND	GROUND
$\overline{CS}$	CHIP SELECT		
D_{IN}	DATA INPUT		
D_{OUT}	DATA OUTPUT		

TRUTH TABLE

$\overline{CS}$	$\overline{WE}$	MODE	OUTPUT	POWER
H	X	NOT SELECTED	HIGH Z	STANDBY
L	L	WRITE	HIGH Z	ACTIVE
L	H	READ	D_{OUT}	ACTIVE

PIN	ADDRESS	FUNCTION
17	A_{11}	X_0
18	A_{12}	X_1
19	A_{13}	X_2
1	A_0	X_3
2	A_1	X_4
3	A_2	X_5
4	A_3	X_6
13	A_7	Y_0
7	A_6	Y_1
15	A_9	Y_2
6	A_5	Y_3
16	A_{10}	Y_4
5	A_4	Y_5
14	A_8	Y_6

ABSOLUTE MAXIMUM RATINGS*

Temperature Under Bias..... −10°C to +85°C
Storage Temperature..... −65°C to +150°C
Voltage on Any Pin With
Respect to Ground..... −3.5V to +7V
Power Dissipation..... 1.2W
D.C. Output Current..... 20 mA

**COMMENT: Stresses above those listed under "Absolute Maximum Ratings" may cause permanent damage to the device. This is a stress rating only and functional operation of the device at these or any other conditions above those indicated in the operational sections of this specification is not implied. Exposure to absolute maximum rating conditions for extended periods may affect device reliability*

D.C. AND OPERATING CHARACTERISTICS[1]

$T_A = 0°C$ to $70°C$, $V_{CC} = +5V \pm 10\%$, unless otherwise noted.

Symbol	Parameter	2167-55, 2167-70 Min.	Typ.[2]	Max.	2167L-70, 2167-10 Min.	Typ.[2]	Max.	Unit	Test Conditions
I_{LI}	Input Load Current (All Input Pins)		0.01	10		0.01	10	μA	V_{CC} = Max., V_{IN} = GND to V_{CC}
$\|I_{LO}\|$	Output Leakage Current		0.1	50		0.1	50	μA	$\overline{CS} = V_{IH}$, V_{CC} = Max., V_{OUT} = GND to 4.5V
I_{CC}	Operating Current		90	120		70	85	m A	$T_A = 25°C$ | V_{CC} = Max., $\overline{CS} = V_{IL}$, Outputs Open
				125			90	mA	$T_A = 0°C$
I_{SB}	Standby Current		25	40		20	30	mA	V_{CC} = Min. to Max., $\overline{CS} = V_{IH}$
I_{PO}[3]	Peak Power-On Current		35	70		25	50	mA	V_{CC} = GND to V_{CC} Min., $\overline{CS}$ = Lower of V_{CC} or V_{IH} Min.
V_{IL}	Input Low Voltage	−3.0		0.8	−3.0		0.8	V	
V_{IH}	Input High Voltage	2.0		6.0	2.0		6.0	V	
V_{OL}	Output Low Voltage			0.4			0.4	V	I_{OL} = 8 mA
V_{OH}	Output High Voltage	2.4			2.4			V	I_{OH} = −4.0 mA

Notes:
1. The operating ambient temperature is guaranteed with transverse air flow exceeding 400 linear feet per minute.
2. Typical limits are at $V_{CC} = 5V$, $T_A = +25°C$, and specified loading.
3. A pull-up resistor to V_{CC} on the $\overline{CS}$ input is required to keep the device deselected; otherwise, power-on current approaches I_{CC} active.

A.C. TEST CONDITIONS

Input Pulse Levels	GND to 3.0V
Input Rise and Fall Times	5 ns
Input Timing Reference Level	1.5V
Output Timing Reference Levels	0.8–2.0V
Output Load	See Figure 1

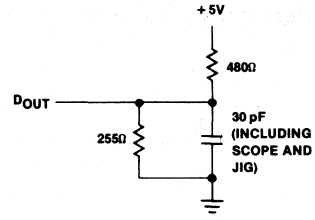

Figure 1. Output Load

CAPACITANCE[4]

$T_A = 25°C$, $f = 1.0$ MHz

Symbol	Parameter	Max.	Unit	Conditions
C_{IN}	Input Capacitance	7	pF	V_{IN} = 0V
C_{OUT}	Output Capacitance	6	pF	V_{OUT} = 0V

Note: 4. This parameter is sampled and not 100% tested.

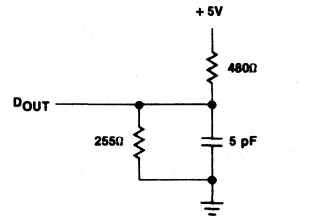

Figure 2. Output Load for t_{HZ}, t_{LZ}, t_{WZ}, t_{OW}

A.C. CHARACTERISTICS

$T_A = 0°C$ to $70°C$, $V_{CC} = +5V \pm 10\%$, unless otherwise noted.

READ CYCLE

Symbol	Parameter	2167-55 Min.	2167-55 Max.	2167-70, 2167L-70 Min.	2167-70, 2167L-70 Max.	2167-10 Min.	2167-10 Max.	Unit
t_{RC}[1]	Read Cycle Time	55		70		100		ns
t_{AA}	Address Access Time		55		70		100	ns
t_{ACS}	Chip Select Access Time		55		70		100	ns
t_{OH}	Output Hold from Access Change	5		5		5		ns
t_{LZ}[2,3]	Chip Selection to Output in Low Z	10		10		10		ns
t_{HZ}[2,3]	Chip Deselection to Output in High Z	0	30	0	40	0	40	ns
t_{PU}	Chip Selection to Power-Up Time	40		50		55		ns
t_{PD}	Chip Deselection to Power-Down Time		55		70		80	ns

WAVEFORMS

READ CYCLE NO. 1 [4,5]

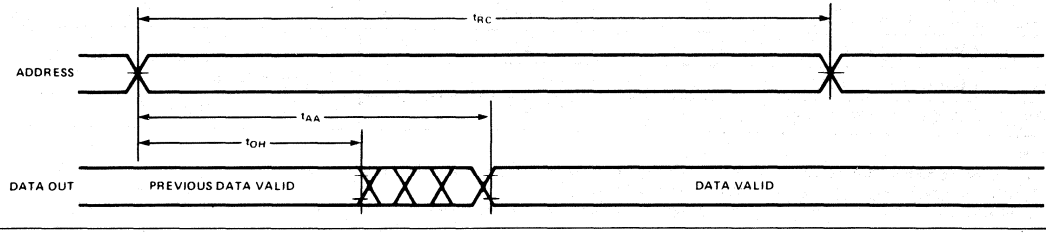

READ CYCLE NO. 2 [4,6]

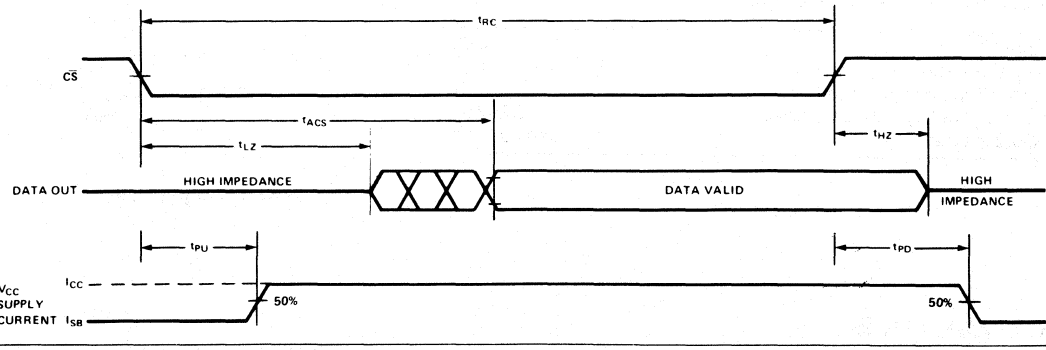

Notes:
1. All Read Cycle timings are referenced from the last valid address to the first transitioning address.
2. At any given temperature and voltage condition, t_{HZ} max is less than t_{LZ} min both for a given device and from device to device.
3. Transition is measured ± 500 mV from steady state voltage with specified loading in Figure 2. This parameter is sampled and not 100% tested.
4. $\overline{WE}$ is high for Read Cycles.
5. Device is continuously selected, $\overline{CS} = V_{IL}$.
6. Addresses valid prior to or coincident with $\overline{CS}$ transition low.

A.C. CHARACTERISTICS (Continued)

WRITE CYCLE

Symbol	Parameter	2167-55 Min.	2167-55 Max.	2167-70, 2167L-70 Min.	2167-70, 2167L-70 Max.	2167-10 Min.	2167-10 Max.	Unit
t_{WC}[2]	Write Cycle Time	55		70		100		ns
t_{CW}	Chip Selection to End of Write	55		70		90		ns
t_{AW}	Address Valid to End of Write	55		70		95		ns
t_{AS}	Address Setup Time	0		0		5		ns
t_{WP}	Write Pulse Width	35		40		45		ns
t_{WR}	Write Recovery Time	0		0		5		ns
t_{DW}	Data Valid to End of Write	25		30		35		ns
t_{DH}	Data Hold Time	0		0		0		ns
t_{WZ}[3]	Write Enabled to Output in High Z	0	25	0	35	0	35	ns
T_{OW}	Output Active from End of Write	0		0		0		ns

WAVEFORMS

WRITE CYCLE #1 ($\overline{WE}$ CONTROLLED) [4]

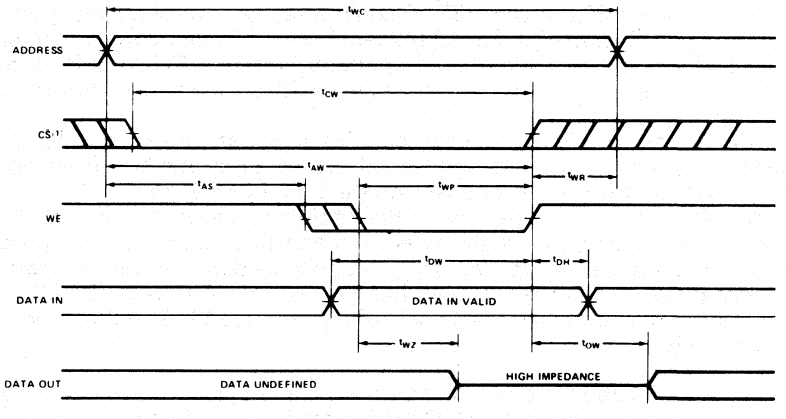

WRITE CYCLE #2 ($\overline{CS}$ CONTROLLED) [4]

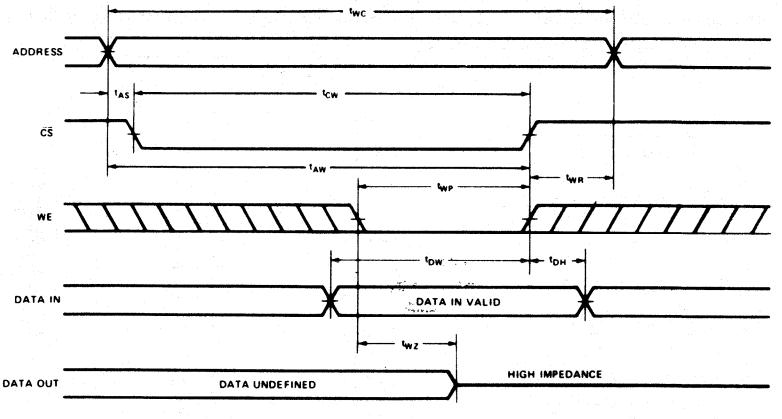

Notes: 1. If $\overline{CS}$ goes high simultaneously with $\overline{WE}$ high, the output remains in a high impedance state.
2. All Write Cycle timings are referenced from the last valid address to the first transitioning address.
3. Transition is measured ±500 mV from steady state voltage with specified loading in Figure 2. This parameter is sampled and not 100% tested.
4. $\overline{CS}$ or $\overline{WE}$ must be high during address transitions.

8148
4096 x 8-BIT INTEGRATED RAM

- **Multiplexed Address and Data Buses**
- **8 or 16-Bit System Capability**
- **On-Chip Arbitration**
- **Processor Handshake**
- **Proven HMOS-D2 Reliability**
- **50 mA Active, 10 mA Standby**
- **Fully Integrated Refresh**
- **Fully Integrated Control Logic**
- **Automatic Wake-Up**
- **Multiple Refresh Modes**
- **200 ns Access, 400 ns Cycle Times**

The Intel 8148 is a 4096-word by 8-bit integrated random access memory—iRAM. Integrating all refresh control circuitry at the chip level allows the system designer to take advantage of dynamic RAM density, performance and price without the added cost of designing the refresh control interface. The 8148 is intended for use with multiplexed address/data bus microprocessors such as the Intel iAPX 86 and iAPX 88. Flexible data bus control options permit the 8148 to be arranged for operation on either 8-bit or 16-bit data buses. All operating parameters have been optimized for high performance, no WAIT state operation without TTL interface components. Output drive capabilities and access times are consistent with all present and future microprocessors.

Complete on-chip refresh control circuitry includes refresh address counting and multiplexing, refresh interval timing, and high speed request arbitration. Refresh operation may be controlled either externally by synchronously strobing the $\overline{\text{REFEN}}$ input 128 times in 2 msec, or internally by holding $\overline{\text{REFEN}}$ input to ground. In the internal mode of refresh operation, all refresh is automatic and nearly transparent to the user. A handshake signal to the processor, called READY, is provided to indicate when memory access occurs during refresh operation. READY is used to stop the microprocessor until the 8148 has finished doing refresh. READY, an open drain output, is then released to be pulled back high to V_{CC}, and the 8148 continues with the externally requested access cycle.

Data output location is controlled by two external pins. The internal 8-bit data bus can be shifted between the upper eight data I/O pins or the lower eight data I/O pins. This allows the same part to be used in either 8-bit or 16-bit systems. Multiple levels of chip selects permit linear selection of RAM by the highest order addresses.

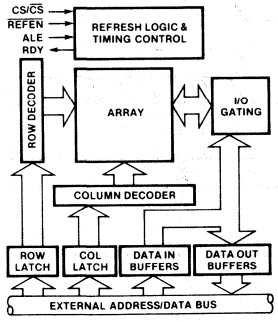

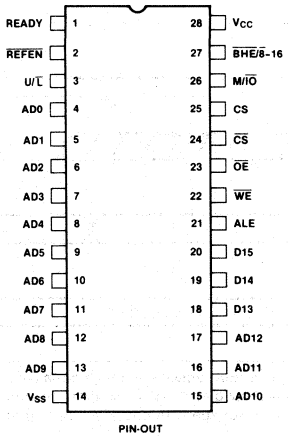

PIN-OUT

PIN NAMES

AD0-AD12	ADDRESS/DATA I/O
D13-D15	DATA I/O
READY	READY
$\overline{REFEN}$	REFRESH ENABLE
$\overline{WE}$	WRITE ENABLE
$\overline{OE}$	OUTPUT ENABLE
ALE	ADDRESS LATCH ENABLE
$\overline{BHE}$/8-16	BYTE HIGH ENABLE/8-16
U/$\overline{L}$	UPPER/LOWER
CS, $\overline{CS}$, M/$\overline{IO}$	CHIP SELECTS
V_{SS}	GROUND
V_{CC}	+5 VOLTS

Intel Corporation assumes no responsibility for the use of any circuitry other than circuitry embodied in an Intel product. No other circuit patent licenses are implied.
© INTEL CORPORATION, 1980
Printed in U.S.A.

2186/7
8192 x 8-BIT INTEGRATED RAM

- **Synchronous and Asynchronous Versions**
- **Fully Integrated On-Chip Refresh**
- **On-Chip Signal Arbitration**
- **Processor Handshake Signal**
- **Automatic Wake-Up**
- **90 mA Active, 15 mA Standby**
- **JEDEC JC-42 Standard Pinout**
- **Single-Step Capability**
- **Two-Line Data Bus Control**
- **Single +5V ±10% Supply**
- **Proven HMOS-D2 Reliability**
- **200 ns Access, 320 ns Cycle Times**

The Intel 2186/7 is an 8192-word by 8-bit integrated random access memory fabricated on Intel's high performance HMOS-D2 dynamic RAM technology. By integrating all refresh control circuitry at the chip level, the 2186/7 allows the system designer to take advantage of dynamic RAM density, power consumption and price without the added cost of designing the refresh control interface. Complete on-chip circuitry includes refresh address counting and multiplexing, refresh interval timing and high speed request arbitration. Designed for flexible operation in virtually any microprocessor system, the 2186/7 incorporates many features unique to microprocessor applications. These include auto precharge for single-step operation, automatic power-up, activated through the system reset, and two-line data bus control to eliminate bus contention.

Offered in two separate versions, the 2186/7 is optimized to operate on either synchronous or asynchronous system memory buses. For synchronous operation, all internal functions are disabled except refresh address counting and multiplexing. In this application, the user must provide the specified 128 pulses to the $\overline{\text{REFEN}}$ input every 2 msec. For asynchronous operation, a handshake signal to the processor, called READY, is provided in lieu of $\overline{\text{REFEN}}$ to indicate when memory and system timings are incompatible (as during a refresh operation). A not ready condition occurs only when a 2186 has been accessed by $\overline{\text{CE}}$ going low during a refresh cycle. When this occurs, the refresh cycle is completed, READY is released to be pulled back high to V_{CC}, and the memory cycle continues to completion.

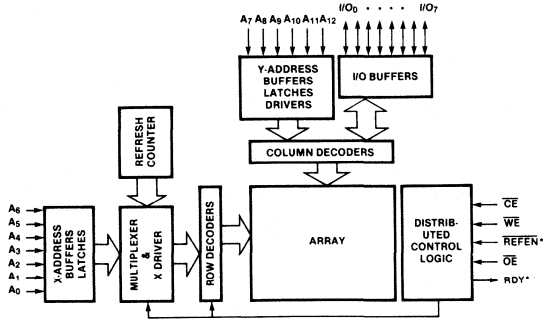

PIN NAMES

A_0-A_{12}	ADDRESS INPUTS
$\overline{CE}$	CHIP ENABLE
$\overline{OE}$	OUTPUT ENABLE
$\overline{WE}$	WRITE ENABLE
I/O_0-I/O_7	DATA INPUT/OUTPUT
$\overline{REFEN}$	REFRESH ENABLE
RDY	READY
V_{CC}	+5V POWER
V_{SS}	GROUND

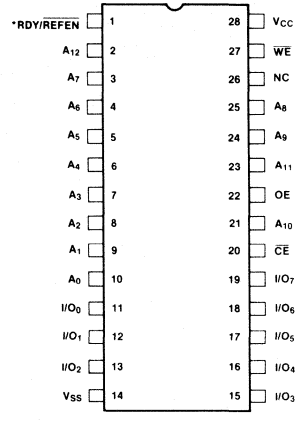

28-LEAD

*REFEN OFFERED WITH SYNCHRONOUS VERSION ONLY
RDY OFFERED WITH ASYNCHRONOUS VERSION ONLY

Intel Corporation assumes no responsibility for the use of any circuitry other than circuitry embodied in an Intel product. No other circuit patent licenses are implied.
© INTEL CORPORATION, 1980
Printed in U.S.A.

Read Only Memory and Memory Support

2

2716*
16K (2K x 8) UV ERASABLE PROM

- **Fast Access Time**
  - **— 2716-1: 350 ns Max.**
  - **— 2716-2: 390 ns Max.**
  - **— 2716: 450 ns Max.**
  - **— 2716-5: 490 ns Max.**
  - **— 2716-6: 650 ns Max.**
- **Single +5V Power Supply**
- **Low Power Dissipation**
  - **— Active Power: 525 mW Max.**
  - **— Standby Power: 132 mW Max.**
- **Pin Compatible to Intel 2732A EPROM**
- **Simple Programming Requirements**
  - **— Single Location Programming**
  - **— Programs with One 50 ms Pulse**
- **Inputs and Outputs TTL Compatible During Read and Program**
- **Completely Static**

The Intel® 2716 is a 16,384-bit ultraviolet erasable and electrically programmable read-only memory (EPROM). The 2716 operates from a single 5-volt power supply, has a static standby mode, and features fast single-address location programming. It makes designing with EPROMs faster, easier and more economical.

The 2716, with its single 5-volt supply and with an access time up to 350 ns, is ideal for use with the newer high-performance +5V microprocessors such as Intel's 8085 and 8086. A selected 2716-5 and a 2716-6 are available for slower speed applications. The 2716 is also the first EPROM with a static standby mode which reduces the power dissipation without increasing access time. The maximum active power dissipation is 525 mW while the maximum standby power dissipation is only 132 mW, a 75% savings.

The 2716 has the simplest and fastest method yet devised for programming EPROMs—single-pulse, TTL-level programming. No need for high voltage pulsing because all programming controls are handled by TTL signals. Program any location at any time—either individually, sequentially or at random, with the 2716's single-address location programming. Total programming time for all 16,384 bits is only 100 seconds.

*Part(s) also available in extended temperature range for Military and Industrial grade applications.

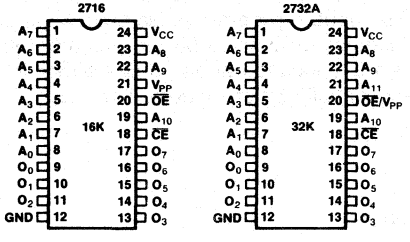

Refer to 2732A data sheet for specifications.

PIN NAMES

A_0-A_{10}	ADDRESSES
$\overline{CE}$/PGM	CHIP ENABLE/PROGRAM
$\overline{OE}$	OUTPUT ENABLE
O_0-O_7	OUTPUTS

Figure 1. Pin Configuration

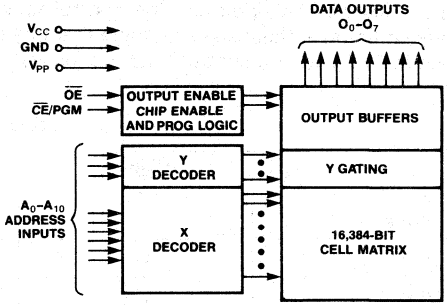

Figure 2. Block Diagram

Intel Corporation Assumes No Responsibilty for the Use of Any Circuitry Other Than Circuitry Embodied in an Intel Product. No Other Circuit Patent Licenses are Implied.
©INTEL CORPORATION, 1981.

SEPTEMBER 1981
AFN-00811B

DEVICE OPERATION

The five modes of operation of the 2716 are listed in Table 1. It should be noted that all inputs for the five modes are at TTL levels. The power supplies required are a +5V V_{CC} and a V_{PP}. The V_{PP} power supply must be at 25V during the three programming modes, and must be at 5V in the other two modes.

Read Mode

The 2716 has two control functions, both of which must be logically satisfied in order to obtain data at the outputs. Chip Enable ($\overline{CE}$) is the power control and should be used for device selection. Output Enable ($\overline{OE}$) is the output control and should be used to gate data to the output pins, independent of device selection. Assuming that addresses are stable, address access time (t_{ACC}) is equal to the delay from $\overline{CE}$ to output (t_{CE}). Data is available at the outputs t_{OE} after the falling edge of $\overline{OE}$, assuming that $\overline{CE}$ has been low and addresses have been stable for at least $t_{ACC}-t_{OE}$.

Standby Mode

The 2716 has a standby mode which reduces the active power dissipation by 75%, from 525 mW to 132 mW. The 2716 is placed in the standby mode by applying a TTL high signal to the $\overline{CE}$ input. When in standby mode, the outputs are in a high impedence state, independent of the $\overline{OE}$ input.

Output OR-Tieing

Because 2716s are usually used in larger memory arrays, Intel has provided a 2-line control function that accomodates this use of multiple memory connections. The two-line control function allows for:

a) the lowest possible memory power dissipation, and

b) complete assurance that output bus contention will not occur.

To most efficiently use these two control lines, it is recommended that $\overline{CE}$ (pin 18) be decoded and used as the primary device selecting function, while $\overline{OE}$ (pin 20) be made a common connection to all devices in the array and connected to the READ line from the system control bus. This assures that all deselected memory devices are in their low-power standby modes and that the output pins are only active when data is desired from a particular memory device.

Programming

Initially, and after each erasure, all bits of the 2716 are in the "1" state. Data is introduced by selectively programming "0's" into the desired bit locations. Although only "0's" will be programmed, both "1's" and "0's" can be presented in the data word. The only way to change a "0" to a "1" is by ultraviolet light erasure.

The 2716 is in the programming mode when the V_{PP} power supply is at 25V and $\overline{OE}$ is at V_{IH}. The data to be programmed is applied 8 bits in parallel to the data output pins. The levels required for the address and data inputs are TTL.

When the address and data are stable, a 50 msec, active-high, TTL program pulse is applied to the $\overline{CE}$/PGM input. A program pulse must be applied at each address location to be programmed. You can program any location at any time—either individually, sequentially, or at random. The program pulse

Table 1. Mode Selection

Mode \ Pins	$\overline{CE}$/PGM (18)	$\overline{OE}$ (20)	V_{PP} (21)	V_{CC} (24)	Outputs (9–11, 13–17)
Read	V_{IL}	V_{IL}	+5	+5	D_{OUT}
Standby	V_{IH}	Don't Care	+5	+5	High Z
Program	Pulsed V_{IL} to V_{IH}	V_{IH}	+25	+5	D_{IN}
Program Verify	V_{IL}	V_{IL}	+25	+5	D_{OUT}
Program Inhibit	V_{IL}	V_{IH}	+25	+5	High Z

has a maximum width of 55 msec. The 2716 must not be programmed with a DC signal applied to the $\overline{CE}$/PGM input.

Programming of multiple 2716s in parallel with the same data can be easily accomplished due to the simplicity of the programming requirements. Like inputs of the paralleled 2716s may be connected together when they are programmed with the same data. A high-level TTL pulse applied to the $\overline{CE}$/PGM input programs the paralleled 2716s.

Program Inhibit

Programming of multiple 2716s in parallel with different data is also easily accomplished. Except for $\overline{CE}$/PGM, all like inputs (including $\overline{OE}$) of the parallel 2716s may be common. A TTL-level program pulse applied to a 2716's $\overline{CE}$/PGM input with V_{PP} at 25V will program that 2716. A low-level $\overline{CE}$/PGM input inhibits the other 2716 from being programmed.

Program Verify

A verify should be performed on the programmed bits to determine that they were correctly programmed. The verify may be performed with V_{PP} at 25V. Except during programming and program verify, V_{PP} must be at 5V.

ERASURE CHARACTERISTICS

The erasure characteristics of the 2716 are such that erasure begins to occur when exposed to light with wavelengths shorter than approximately 4000 Angstroms (Å). It should be noted that sunlight and certain types of fluorescent lamps have wavelengths in the 3000–4000 Å range. Data show that constant exposure to room-level fluorescent lighting could erase the typical 2716 in approximately 3 years, while it would take approximately 1 week to cause erasure when exposed to direct sunlight. If the 2716 is to be exposed to these types of lighting conditions for extended periods of time, opaque labels are available from Intel which should be placed over the 2716 window to prevent unintentional erasure.

The recommended erasure procedure (see Data Catalog PROM/ROM Programming Instruction Section) for the 2716 is exposure to shortwave ultraviolet light which has a wavelength of 2537 Angstroms (Å). The integrated dose (i.e., UV intensity X exposure time) for erasure should be a minimum of 15 W-sec/cm^2. The erasure time with this dosage is approximately 15 to 20 minutes using an ultraviolet lamp with a 1200 μW/cm^2 power rating. The 2716 should be placed within 1 inch of the lamp tubes during erasure. Some lamps have a filter on their tubes which should be removed before erasure.

ABSOLUTE MAXIMUM RATINGS*

Temperature Under Bias ..... −10°C to +80°C
Storage Temperature ..... −65°C to +125°C
All Input or Output Voltages with
Respect to Ground ..... +6V to −0.3V
V_{PP} Supply Voltage with Respect
to Ground During Program ..... +26.5V to −0.3V

**NOTICE: Stresses above those listed under "Absolute Maximum Ratings" may cause permanent damage to the device. This is a stress rating only and functional operation of the device at these or any other conditions above those indicated in the operational sections of this specification is not implied. Exposure to absolute maximum rating conditions for extended periods may affect device reliability.*

DC AND AC OPERATING CONDITIONS DURING READ

	2716	2716-1	2716-2	2716-5	2716-6
Temperature Range	0°C–70°C	0°C–70°C	0°C–70°C	0°C–70°C	0°C–70°C
V_{CC} Power Supply[1,2]	5V ±5%	5V ±10%	5V ±5%	5V ±5%	5V ±5%
V_{PP} Power Supply[2]	V_{CC}	V_{CC}	V_{CC}	V_{CC}	V_{CC}

READ OPERATION

D.C. AND OPERATING CHARACTERISTICS

Symbol	Parameter	Limits			Units	Test Conditions
		Min.	Typ.[3]	Max.		
I_{LI}	Input Load Current			10	μA	V_{IN} = 5.25V
I_{LO}	Output Leakage Current			10	μA	V_{OUT} = 5.25V
I_{PP1}[2]	V_{PP} Current			5	mA	V_{PP} = 5.25V
I_{CC1}[2]	V_{CC} Current (Standby)		10	25	mA	$\overline{CE}$ = V_{IH}, $\overline{OE}$ = V_{IL}
I_{CC2}[2]	V_{CC} Current (Active)		57	100	mA	$\overline{OE}$ = $\overline{CE}$ = V_{IL}
V_{IL}	Input Low Voltage	−0.1		0.8	V	
V_{IH}	Input High Voltage	2.0		V_{CC}+1	V	
V_{OL}	Output Low Voltage			0.45	V	I_{OL} = 2.1 mA
V_{OH}	Output High Voltage	2.4			V	I_{OH} = −400 μA

TYPICAL CHARACTERISTICS

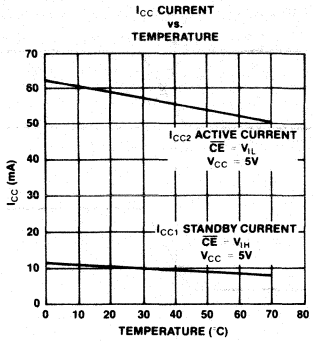

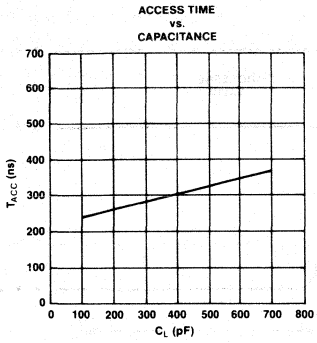

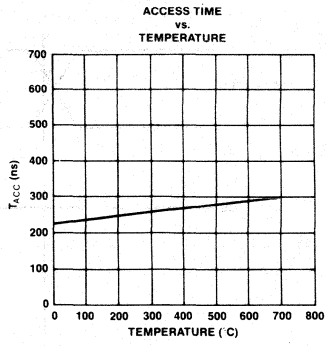

A.C. CHARACTERISTICS

Symbol	Parameter	Limits (ns)										Test Conditions
		2716		2716-1		2716-2		2716-5		2716-6		
		Min.	Max.	Min.	Max.	Min.	Max.	Min.	Max.	Min.	Max.	
t_{ACC}	Address to Output Delay		450		350		390		450		450	$\overline{CE}$ = $\overline{OE}$ = V_{IL}
t_{CE}	$\overline{CE}$ to Output Delay		450		350		390		490		650	$\overline{OE}$ = V_{IL}
t_{OE}[4]	Output Enable to Output Delay		120		120		120		160		200	$\overline{CE}$ = V_{IL}
t_{DF}[4]	Output Enable High to Output Float	0	100	0	100	0	100	0	100	0	100	$\overline{CE}$ = V_{IL}
t_{OH}	Output Hold from Addresses, $\overline{CE}$ or $\overline{OE}$ Whichever Occurred First	0		0		0		0		0		$\overline{CE}$ = $\overline{OE}$ = V_{IL}

CAPACITANCE[4] (T_A = 25°C, f = 1 MHz)

Symbol	Parameter	Typ.	Max.	Units	Test Conditions
C_{IN}	Input Capacitance	4	6	pF	V_{IN} = 0V
C_{OUT}	Output Capacitance	8	12	pF	V_{OUT} = 0V

A.C. TEST CONDITIONS

Output Load ..... 1 TTL gate and C_L = 100 pF
Input Rise and Fall Times ..... ≤20 ns
Input Pulse Levels ..... 0.8V to 2.2V
Timing Measurement Reference Level:
Inputs ..... 1V and 2V
Outputs ..... 0.8V and 2V

A.C. WAVEFORMS[1]

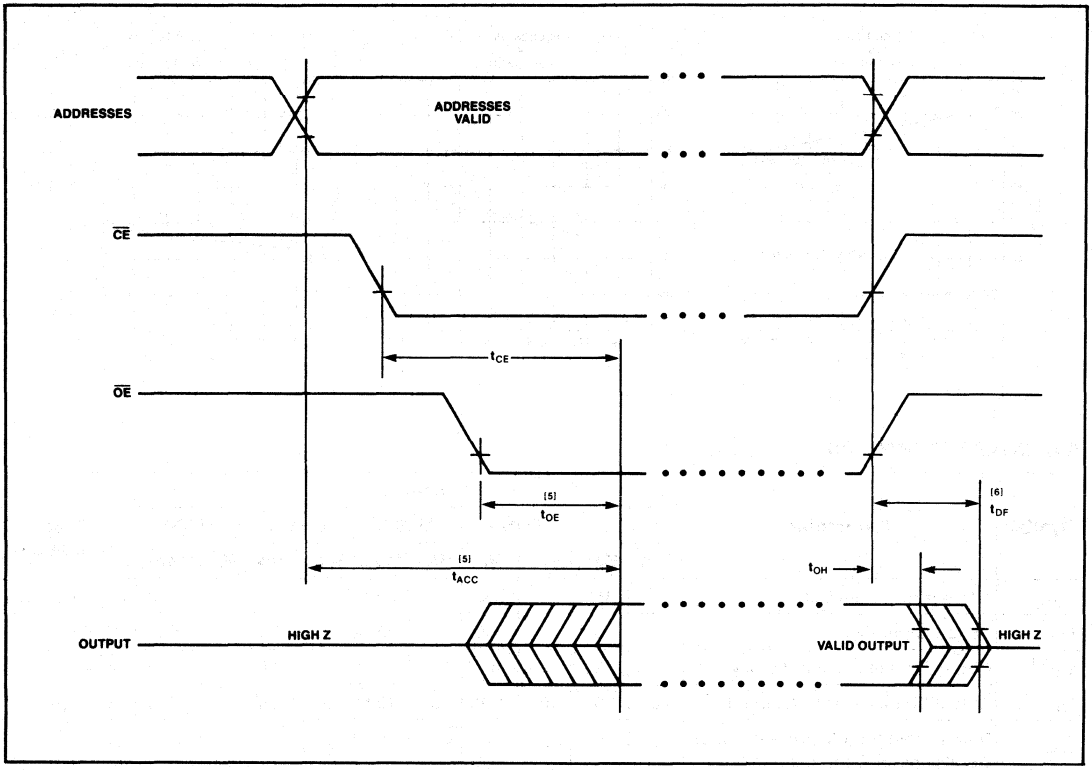

NOTES:
1. V_{CC} must be applied simultaneously or before V_{PP} and removed simultaneously or after V_{PP}.
2. V_{PP} may be connected to V_{CC} except during programming. The supply current would then be the sum of I_{CC} and I_{PP1}.
3. Typical values are for T_A = 25°C and nominal supply voltages.
4. This parameter is only sampled and is not 100% tested.
5. $\overline{OE}$ may be delayed up to $t_{ACC}-t_{OE}$ after the falling edge of $\overline{CE}$ without impact on t_{ACC}.
6. t_{DF} is specified from $\overline{OE}$ or $\overline{CE}$, whichever occurs first.

PROGRAMMING CHARACTERSITICS[1]

D.C. PROGRAMMING CHARACTERISTICS (T_A = 25°C ±5°C, V_{CC}[2] = 5V ±5%, V_{PP}[2,3] = 25V ±1V)

Symbol	Parameter	Min.	Typ.	Max.	Units	Test Conditions
I_{LI}	Input Current (for Any Input)			10	μA	V_{IN} = 5.25V/0.45
I_{PP1}	V_{PP} Supply Current			5	mA	$\overline{CE}$/PGM = V_{IL}
I_{PP2}	V_{PP} Supply Current During Programming Pulse			30	mA	$\overline{CE}$/PGM = V_{IH}
I_{CC}	V_{CC} Supply Current			100	mA	
V_{IL}	Input Low Level	−0.1		0.8	V	
V_{IH}	Input High Level	2.0		V_{CC}+1	V	

A.C. PROGRAMMING CHARACTERISTICS (T_A = 25°C ±5°C, V_{CC}[2] = 5V ±5%, V_{PP}[2,3] = 25V ±1V)

Symbol	Parameter	Min.	Typ.	Max.	Units	Test Conditions
t_{AS}	Address Setup Time	2			μs	
t_{OES}	$\overline{OE}$ Setup Time	2			μs	
t_{DS}	Data Setup Time	2			μs	
t_{AH}	Address Hold Time	2			μs	
t_{OEH}	$\overline{OE}$ Hold Time	2			μs	
t_{DH}	Data Hold Time	2			μs	
t_{DF}	Output Enable to Output Float Delay	0		200	ns	$\overline{CE}$/PGM = V_{IL}
t_{OE}	Output Enable to Output Delay			200	ns	$\overline{CE}$/PGM = V_{IL}
t_{PW}	Program Pulse Width	45	50	55	ms	
t_{PRT}	Program Pulse Rise Time	5			ns	
t_{PFT}	Program Pulse Fall Time	5			ns	

A.C. CONDITIONS OF TEST

V_{CC} ..... 5V ± 5%
V_{PP} ..... 25V ± 1V
Input Rise and Fall Times (10% to 90%) ..... 20 ns
Input Pulse Levels ..... 0.8 to 2.2V
Input Timing Reference Level ..... 1V and 2V
Output Timing Reference Level ..... 0.8V and 2V

PROGRAMMING WAVEFORMS (V_{PP} = 25V ±1V, V_{CC} = 5V ±5%)

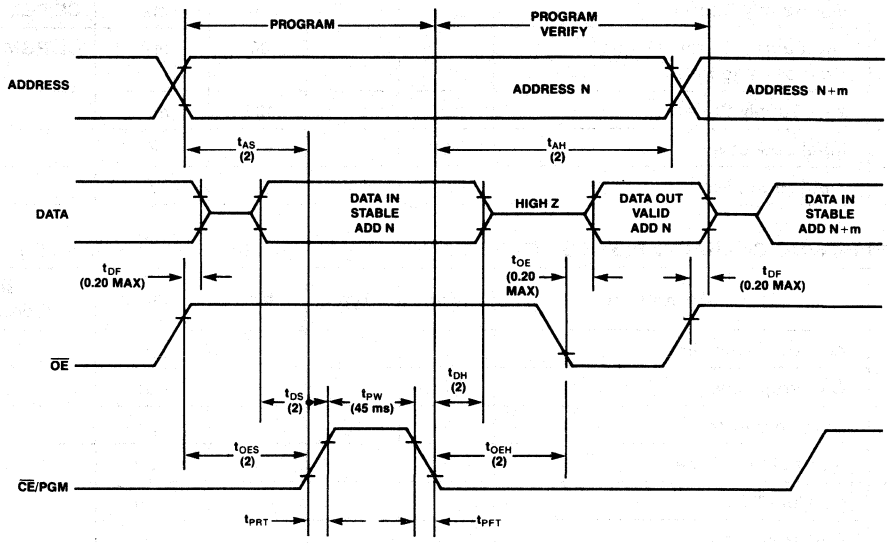

NOTE:
ALL TIMES SHOWN IN PARENTHESES ARE MINIMUM TIMES AND ARE μSEC UNLESS OTHERWISE NOTED.

NOTES:
1. Intel's standard product warranty applies only to devices programmed to specifications described herein.
2. V_{CC} must be applied simultaneously or before V_{PP} and removed simultaneously or after V_{PP}. The 2716 must not be inserted into or removed from a board with V_{PP} at 25 ±1V to prevent damage to the device.
3. The maximum allowable voltage which may be applied to the V_{PP} pin during programming is +26V. Care must be taken when switching the V_{PP} supply to prevent overshoot exceeding this 26V maximum specification.

2732A
32K (4K x 8) UV ERASABLE PROM

- **200 ns (2732A-2) Maximum Access Time . . . HMOS*-E Technology**
- **Compatible to High Speed 8 MHz 8086-2 MPU . . . Zero WAIT State**
- **Two Line Control**
- **Pin Compatible to 2764 EPROM**
- **Industry Standard Pinout . . . JEDEC Approved**
- **Low Standby Current . . . 35 mA Maximum**
- **±10% V_{CC} Tolerance Available**

The Intel® 2732A is a 5V only, 32,768 bit ultraviolet erasable and electrically programmable read-only memory (EPROM). It is pin compatible to Intel's 450 ns 2732. The standard 2732A's access time is 250 ns with speed selection (2732A-2) available at 200 ns. The access time is compatible to high performance microprocessors, such as the 8 MHz 8086-2. In these systems, the 2732A allows the microprocessor to operate without the addition of WAIT states.

An important 2732A feature is the separate output control, Output Enable ($\overline{OE}$), from the Chip Enable control ($\overline{CE}$). The $\overline{OE}$ control eliminates bus contention in multiple bus microprocessor systems. Intel's Application Note AP-72 describes the microprocessor system implementation of the $\overline{OE}$ and $\overline{CE}$ controls on Intel's EPROMs. AP-72 is available from Intel's Literature Department.

The 2732A has a standby mode which reduces the power dissipation without increasing access time. The maximum active current is 125 mA, while the maximum standby current is only 35 mA, a 70% saving. The standby mode is achieved by applying a TTL-high signal to the $\overline{CE}$ input.

The 2732A is fabricated with HMOS*-E technology, Intel's high-speed N-channel MOS Silicon Gate Technology.

*HMOS is a patented process of Intel Corporation.

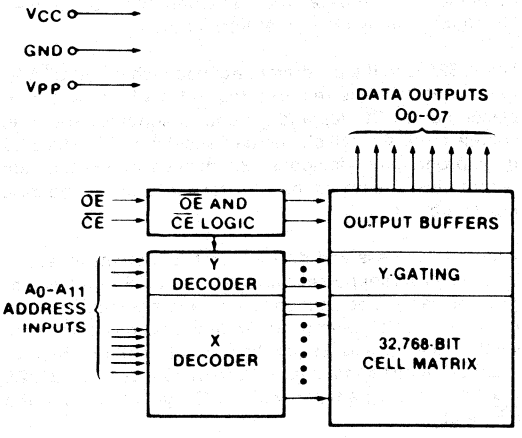

Figure 1. Block Diagram

PIN NAMES

A_0-A_{11}	ADDRESSES
$\overline{CE}$	CHIP ENABLE
$\overline{OE}$	OUTPUT ENABLE
O_0-O_7	OUTPUTS

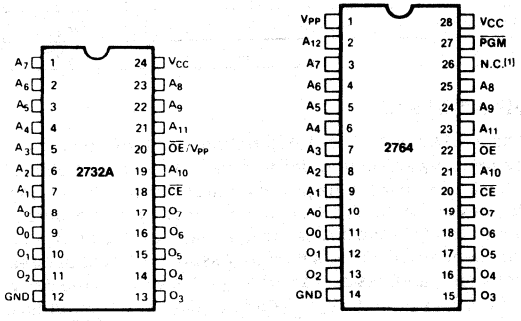

[1] For upgradability to JEDEC approved 128K EPROMs, provide an address line to pin 26. For compatibility with the 2732A and 32K ROMs, provide a trace from V_{CC} to pin 26.

Figure 2. Pin Configurations

Intel Corporation Assumes No Responsibilty for the Use of Any Circuitry Other Than Circuitry Embodied in an Intel Product. No Other Circuit Patent Licenses are Implied.
©INTEL CORPORATION, 1980

ERASURE CHARACTERISTICS

The erasure characteristics of the 2732A are such that erasure begins to occur when exposed to light with wavelengths shorter than approximately 4000 Angstroms (Å). It should be noted that sunlight and certain types of fluorescent lamps have wavelengths in the 3000-4000Å range. Data show that constant exposure to room level fluorescent lighting could erase the typical 2732A in approximately 3 years, while it would take approximately 1 week to cause erasure when exposed to direct sunlight. If the 2732A is to be exposed to these types of lighting conditions for extended periods of time, opaque labels are available from Intel which should be placed over the 2732A window to prevent unintentional erasure.

The recommended erasure procedure for the 2732A is exposure to shortwave ultraviolet light which has a wavelength of 2537 Angstroms (Å). The integrated dose (i.e., UV intensity X exposure time) for erasure should be a minimum of 15 W-sec/cm^2. The erasure time with this dosage is approximately 15 to 20 minutes using an ultraviolet lamp with 12000μW/cm^2 power rating. The 2732A should be placed within 1 inch of the lamp tubes during erasure. Some lamps have a filter on their tubes which should be removed before erasure.

DEVICE OPERATION

The five modes of operation of the 2732A are listed in Table 1. A single 5V power supply is required in the read mode. All inputs are TTL levels except for $\overline{OE}/V_{PP}$ during programming. In the program mode the $\overline{OE}/V_{PP}$ input is pulsed from a TTL level to 21V.

Table 1. Mode Selection

MODE \ PINS	CE (18)	OE/V_{PP} (20)	V_{CC} (24)	OUTPUTS (9-11,13-17)
Read	V_{IL}	V_{IL}	+5	D_{OUT}
Standby	V_{IH}	Don't Care	+5	High Z
Program	V_{IL}	V_{PP}	+5	D_{IN}
Program Verify	V_{IL}	V_{IL}	+5	D_{OUT}
Program Inhibit	V_{IH}	V_{PP}	+5	High Z

Read Mode

The 2732A has two control functions, both of which must be logically active in order to obtain data at the outputs. Chip Enable ($\overline{CE}$) is the power control and should be used for device selection. Output Enable ($\overline{OE}$) is the output control and should be used to gate data to the output pins, independent of device selection. Assuming that addresses are stable, address access time (t_{ACC}) is equal to the delay from $\overline{CE}$ to output (t_{CE}). Data is available at the outputs after the falling edge of $\overline{OE}$, assuming that $\overline{CE}$ has been low and addresses have been stable for at least $t_{ACC}-t_{OE}$.

Standby Mode

The 2732A has a standby mode which reduces the active power current from 125 mA to 35 mA. The 2732A is placed in the standby mode by applying a TTL-high signal to the $\overline{CE}$ input. When in standby mode, the outputs are in a high impedance state, independent of the $\overline{OE}$ input.

Output OR-Tieing

Because EPROMs are usually used in larger memory arrays, Intel has provided a 2 line control function that accommodates this use of multiple memory connection. The two line control function allows for:

a) the lowest possible memory power dissipation, and
b) complete assurance that output bus contention will not occur.

To use these two control lines most efficiently, it is recommended that $\overline{CE}$ (pin 18) be decoded and used as the primary device selecting function, while $\overline{OE}$ (pin 20) be made a common connection to all devices in the array and connected to the READ line from the system control bus. This assures that all deselected memory devices are in their low power standby mode and that the output pins are only active when data is desired from a particular memory device.

PROGRAMMING (See Programming Instruction Section for Waveforms.)

Programming is the same as Intel's 450 ns 2732 except for the programming voltage. In the program mode the 2732A $\overline{OE}/V_{PP}$ input is pulsed from a TTL low level to 21V (25V for the 2732). ***Exceeding 22V will damage the 2732A.***

Initially, and after each erasure, all bits of the 2732A are in the "1" state. Data is introduced by selectively programming "0's" into the desired bit locations. Although only "0's" will be programmed, both "1's" and "0's" can be present in the data word. The only way to change a "0" to a "1" is by ultraviolet light erasure.

The 2732A is in the programming mode when the $\overline{OE}/V_{PP}$ input is at 21V. It is required that a 0.1 μF capacitor be placed across $\overline{OE}/V_{PP}$ and ground to suppress spurious voltage transients which may damage the device. The data to be programmed is applied 8 bits in parallel to the data output pins. The levels required for the address and data inputs are TTL.

When the address and data are stable, a 50 msec, active low, TTL program pulse is applied to the $\overline{CE}$ input. A program pulse must be applied at each address location to be programmed. You can program any location at any time —either individually, sequentially, or at random. The program pulse has a maximum width of 55 msec. The 2732A must not be programmed with a DC signal applied to the $\overline{CE}$ input.

Programming of multiple 2732As in parallel with the same data can be easily accomplished due to the simplicity of the programming requirements. Like inputs of the paralleled 2732As may be connected together when they are programmed with the same data. A low level TTL pulse applied to the $\overline{CE}$ input programs the paralleled 2732As.

Program Inhibit

Programming of multiple 2732As in parallel with different data is also easily accomplished. Except for $\overline{CE}$, all like inputs (including $\overline{OE}$) of the parallel 2732As may be common. A TTL level program pulse applied to a 2732A's $\overline{CE}$ input with $\overline{OE}/V_{PP}$ at 21V will program that 2732A. A high level $\overline{CE}$ input inhibits the other 2732As from being programmed.

Program Verify

A verify should be performed on the programmed bits to determine that they were correctly programmed. The verify is accomplished with $\overline{OE}/V_{PP}$ and $\overline{CE}$ at V_{IL}. Data should be verified t_{DV} after the falling edge of $\overline{CE}$.

System Consideration

The power switching characteristics of HMOS-E EPROMs require careful decoupling of the devices. The supply current, I_{CC}, has three segments that are of interest to the system designer—the standby current level, the active current level, and the transient current peaks that are produced on the falling and rising edges of Chip Enable. The magnitude of these transient current peaks is dependent on the output capacitance loading of the device. The associated transient voltage peaks can be suppressed by complying with Intel's Two-Line Control, as detailed in Intel's Application Note, AP-72, and/or by properly selected decoupling capacitors. It is recommended that a 0.1 μF ceramic capacitor be used on every device between V_{CC} and GND. This should be a high frequency capacitor of low inherent inductance. In addition, a 4.7 μF bulk electrolytic capacitor should be used between V_{CC} and GND for each eight devices. The bulk capacitor should be located near where the power supply is connected to the array. The purpose of the bulk capacitor is to overcome the voltage droop caused by the inductive effects of the PC board-traces.

ABSOLUTE MAXIMUM RATINGS*

Temperature Under Bias . . . . . −10°C to +80°C
Storage Temperature . . . . . −65°C to +125°C
All Input or Output Voltages with Respect to Ground . . . . . +6V to −0.3V
V_{PP} Supply Voltage with Respect to Ground During Programming . . . . . +22V to −0.3V

NOTICE: Stresses above those listed under "Absolute Maximum Ratings" may cause permanent damage to the device. This is a stress rating only and functional operation of the device at these or any other conditions above those indicated in the operational sections of this specification is not implied. Exposure to absolute maximum rating conditions for extended periods may affect device reliability.

DC AND AC OPERATING CONDITIONS DURING READ

	2732A/A-2/A-3/A-4	2732A-20/A-25/A-30
Operating Temperature Range	0°C–70°C	0°C–70°C
V_{CC} Power Supply	5V ± 5%	5V ± 10%

READ OPERATION

D.C. CHARACTERISTICS

Symbol	Parameter	Limits			Units	Conditions
		Min.	Typ.[1]	Max.		
I_{IL}	Input Load Current			10	μA	$V_{IN} = 5.5V$
I_{LO}	Output Leakage Current			10	μA	$V_{OUT} = 5.5V$
I_{CC1}	V_{CC} Current (Standby)			35	mA	$\overline{CE} = V_{IH}$, $\overline{OE} = V_{IL}$
I_{CC2}	V_{CC} Current (Active)			125	mA	$\overline{OE} = \overline{CE} = V_{IL}$
V_{IL}	Input Low Voltage	−0.1		0.8	V	
V_{IH}	Input High Voltage	2.0		$V_{CC}+1$	V	
V_{OL}	Output Low Voltage			0.45	V	$I_{OL} = 2.1$ mA
V_{OH}	Output High Voltage	2.4			V	$I_{OH} = -400$ μA

A.C. CHARACTERISTICS

Symbol	Parameter	2732A-2 2732A-20		2732A 2732A-25		2732A-3 2732A-30		2732A-4		Units	Test Conditions*
		Min.	Max.	Min.	Max.	Min.	Max.	Min.	Max.		
t_{ACC}	Address to Output Delay		200		250		300		450	ns	$\overline{CE} = \overline{OE} = V_{IL}$
t_{CE}	$\overline{CE}$ to Output Delay		200		250		300		450	ns	$\overline{OE} = V_{IL}$
t_{OE}	$\overline{OE}$ to Output Delay		70		100		150		150	ns	$\overline{CE} = V_{IL}$
t_{DF}[2]	$\overline{OE}$ High to Output Float	0	60	0	90	0	130	0	130	ns	$\overline{CE} = V_{IL}$
t_{OH}	Output Hold from Addresses, $\overline{CE}$ or $\overline{OE}$ Whichever Occurred First	0		0		0		0		ns	$\overline{CE} = \overline{OE} = V_{IL}$

*A.C. TEST CONDITIONS

Output Load ..... 1 TTL gate and C_L = 100 pF
Input Rise and Fall Times ..... ≤ 20 ns
Input Pulse Levels ..... 0.45V to 2.4V
Timing Measurement Reference Level:
Inputs ..... 0.8 and 2.0V
Outputs ..... 0.8 and 2.0V

CAPACITANCE[2] (T_A = 25°C, f = 1 MHz)

Symbol	Parameter	Typ.	Max.	Unit	Conditions
C_{IN1}	Input Capacitance Except $\overline{OE}/V_{PP}$	4	6	pF	V_{IN} = 0V
C_{IN2}	$\overline{OE}/V_{PP}$ Input Capacitance		20	pF	V_{IN} = 0V
C_{OUT}	Output Capacitance		12	pF	V_{OUT} = 0V

A.C. TESTING INPUT, OUTPUT WAVEFORM

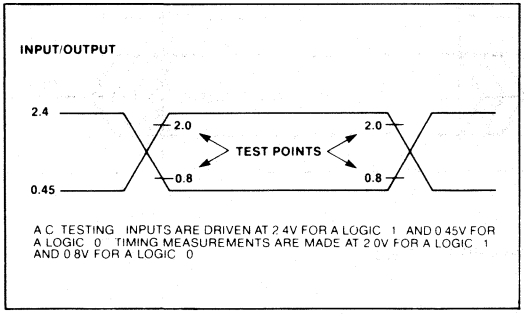

A.C. TESTING LOAD CIRCUIT

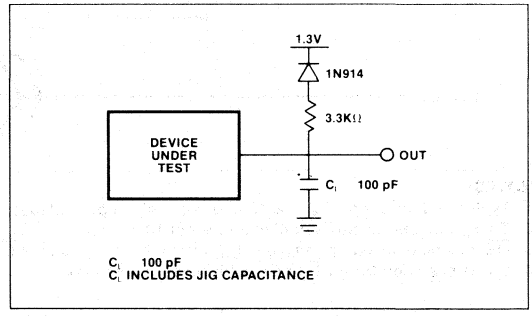

WAVEFORM

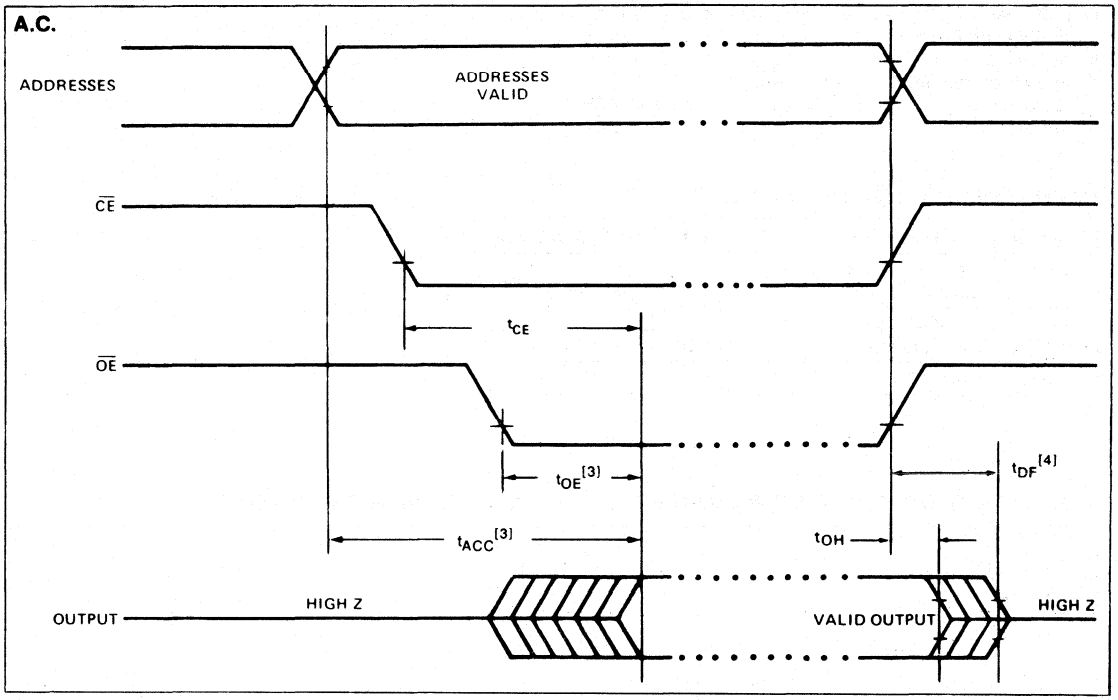

NOTES:
1. Typical values are for T_A = 25°C and nominal supply voltages.
2. This parameter is only sampled and is not 100% tested.
3. $\overline{OE}$ may be delayed up to $t_{ACC} - t_{OE}$ after the falling edge of $\overline{CE}$ without impacting t_{ACC}.
4. t_{DF} is specified from $\overline{OE}$ or $\overline{CE}$, whichever occurs first.

PROGRAMMING

D.C. PROGRAMMING CHARACTERISTICS[5] (T_A = 25 ± 5°C, V_{CC} = 5V ± 5%, V_{PP} = 21V ± 0.5V)

Symbol	Parameter	Limits			Units	Test Conditions
		Min.	Typ.	Max.		
I_{LI}	Input Current (All Inputs)			10	μA	$V_{IN} = V_{IL}$ or V_{IH}
V_{OL}	Output Low Voltage During Verify			0.45	V	I_{OL} = 2.1 mA
V_{OH}	Output High Voltage During Verify	2.4			V	I_{OH} = −400 μA
I_{CC}	V_{CC} Supply Current		85	125	mA	
V_{IL}	Input Low Level (All Inputs)	−0.1		0.8	V	
V_{IH}	Input High Level (All Inputs Except OE/V_{PP})	2.0		V_{CC} + 1	V	
I_{PP}	V_{PP} Supply Current			35	mA	$\overline{CE} = V_{IL}$, $\overline{OE} = V_{PP}$

NOTE:
5. When programming the 2732A, a 0.1 μF capacitor is required across $\overline{OE}/V_{PP}$ and ground to suppress spurious voltage transients which may damage the device.

A.C. PROGRAMMING CHARACTERISTICS (T_A = 25 ± 5°C, V_{CC} = 5V ± 5%, V_{PP} = 21V ± 0.5V)

Symbol	Parameter	Limits			Units	Test Conditions†
		Min.	Typ.	Max.		
t_{AS}	Address Setup Time	2			μs	
t_{OES}	$\overline{OE}$ Setup Time	2			μs	
t_{DS}	Data Setup Time	2			μs	
t_{AH}	Address Hold Time	0			μs	
t_{OEH}	OE Hold Time	2			μs	
t_{DH}	Data Hold Time	2			μs	
t_{DF}	Chip Enable to Output Float Delay	0		130	ns	
t_{DV}	Data Valid from $\overline{CE}$			1	μs	$\overline{CE} = V_{IL}$, $\overline{OE} = V_{IL}$
t_{PW}	$\overline{CE}$ Pulse Width During Programming	45	50	55	ms	
t_{PRT}	$\overline{OE}$ Pulse Rise Time During Programming	50			ns	
t_{VR}	V_{PP} Recovery Time	2			μs	

†A.C. TEST CONDITIONS

Input Rise and Fall Times (10% to 90%) ..... 20 ns
Input Pulse Levels ..... 0.45V to 2.4V
Input Timing Reference Level ..... 1.0 and 2.0V
Output Timing Reference Level ..... 0.8 and 2.0V

WAVEFORM

PROGRAMMING

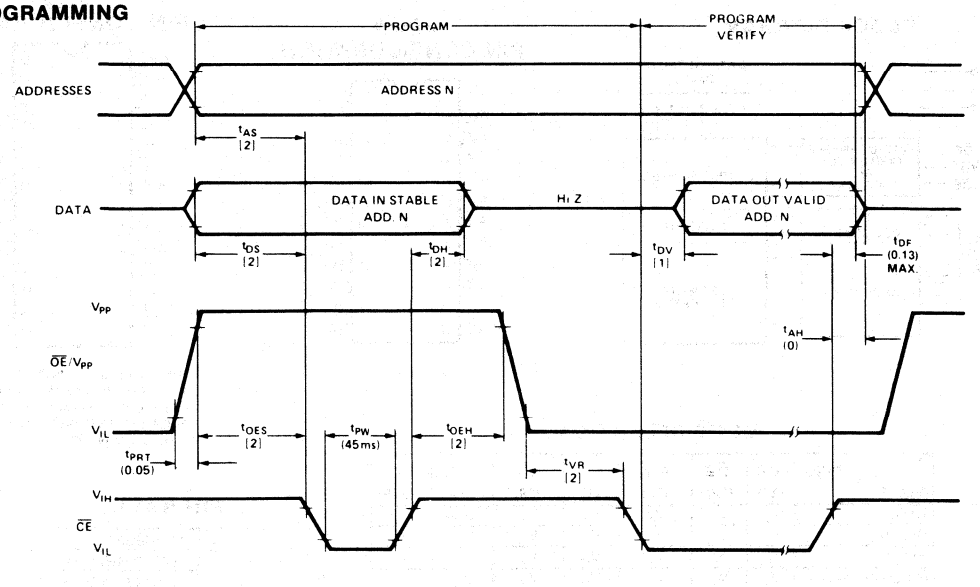

1. ALL TIMES SHOWN IN ( ) ARE MINIMUM AND IN μSEC UNLESS OTHERWISE SPECIFIED
2. THE INPUT TIMING REFERENCE LEVEL IS 1V FOR A V_{IL} AND 2V FOR A V_{IH}

2764
(8K x 8) UV ERASABLE PROM

- **200 ns (2764-2) Maximum Access Time . . . HMOS*-E Technology**
- **Compatible to High Speed 8mHz 8086-2 MPU . . . Zero WAIT State**
- **Two Line Control**
- **Pin Compatible to 2732A EPROM**
- **Industry Standard Pinout . . . JEDEC Approved**
- **Low Active Current...100mA Max.**
- **±10% V_{CC} Tolerance Available**

The Intel® 2764 is a 5V only, 65,536-bit ultraviolet erasable and electrically programmable read-only memory (EPROM). The standard 2764 access time is 250ns with speed selection available at 200ns. The access time is compatible to high performance microprocessors, such as Intel's 8mHz 8086-2. In these systems, the 2764 allows the microprocessor to operate without the addition of WAIT states.

An important 2764 feature is the separate output control, Output Enable ($\overline{OE}$) from the Chip Enable control ($\overline{CE}$). The $\overline{OE}$ control eliminates bus contention in multiple bus microprocessor systems. Intel's Application Note AP-72 describes the microprocessor system implementation of the $\overline{OE}$ and $\overline{CE}$ controls on Intel's EPROMs. AP-72 is available from Intel's Literature Department.

The 2764 has a standby mode which reduces the power dissipation without increasing access time. The active current is 100mA, while the standby current is only 40mA. The standby mode is achieved by applying a TTL-high signal to the $\overline{CE}$ input.

±10% V_{CC} tolerance is available as an alternative to the standard ±5% V_{CC} tolerance for the 2764. This can allow the system designer more leeway in terms of his power supply requirements and other system parameters.

The 2764 is fabricated with HMOS*-E technology, Intel's high-speed N-channel MOS Silicon Gate Technology.

BLOCK DIAGRAM

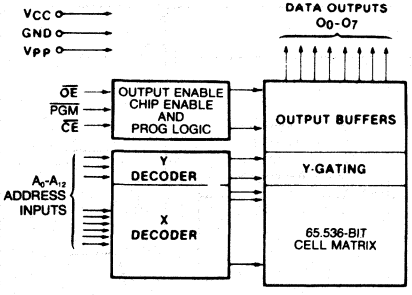

2732A PIN CONFIGURATION

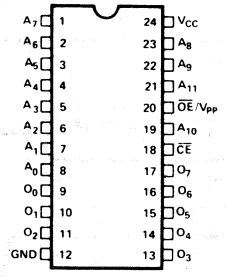

2764 PIN CONFIGURATION

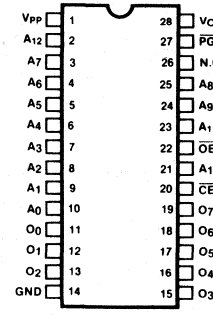

[1] For upgradability to JEDEC approved 128K EPROMs, provide an address line to pin 26. For compatibility with the 2732A and 32K ROMs, provide a trace from V_{CC} to pin 26.

MODE SELECTION

MODE \ PINS	$\overline{CE}$ (20)	$\overline{OE}$ (22)	$\overline{PGM}$ (27)	V_{PP} (1)	V_{CC} (28)	Outputs (11-13, 15-19)
Read	V_{IL}	V_{IL}	V_{IH}	V_{CC}	V_{CC}	D_{OUT}
Standby	V_{IH}	x	x	V_{CC}	V_{CC}	High Z
Program	V_{IL}	x	V_{IL}	V_{PP}	V_{CC}	D_{IN}
Program Verify	V_{IL}	V_{IL}	V_{IH}	V_{PP}	V_{CC}	D_{OUT}
Program Inhibit	V_{IH}	x	x	V_{PP}	V_{CC}	High Z

x can be either V_{IL} or V_{IH}

PIN NAMES

A_0-A_{12}	ADDRESSES
$\overline{CE}$	CHIP ENABLE
$\overline{OE}$	OUTPUT ENABLE
O_0-O_7	OUTPUTS
$\overline{PGM}$	PROGRAM
N.C.	NO CONNECT

*HMOS is a patented process of Intel Corporation.

Intel Corporation Assumes No Responsibilty for the Use of Any Circuitry Other Than Circuitry Embodied in an Intel Product. No Other Circuit Patent Licenses are Implied.
©INTEL CORPORATION, 1980

JUNE 1981
ORDER NUMBER: 210274-001

ABSOLUTE MAXIMUM RATINGS*

Temperature Under Bias .....−10°C to +80°C
Storage Temperature .....−65°C to +125°C
All Input or Output Voltages with Respect to Ground ..... +6.5V to −0.6B
V_{PP} Supply Voltage with Respect to Ground During Programming .....+22V to −0.6V

*COMMENT

Stresses above those listed under "Absolute Maximum Ratings" may cause permanent damage to the device. This is a stress rating only and functional operation of the device at these or any other conditions above those indicated in the operational sections of this specification is not implied. Exposure to absolute maximum rating conditions for extended periods may affect device reliability

D.C. AND A.C. OPERATING CONDITIONS DURING READ

	2764-2	2764	2764-3	2764-4
Operating Temperature Range	0°C–70°C	0°C–70°C	0°C–70°C	0°C–70°C
V_{CC} Power Supply[1,2]	5V ± 5%	5V ± 5%	5V ± 5%	5V ± 5%
V_{PP} Voltage[2]	$V_{PP} = V_{CC}$	$V_{PP} = V_{CC}$	$V_{PP} = V_{CC}$	$V_{PP} = V_{CC}$

2764-25	2764-30	2764-45
0°C–70°C	0°C–70°C	0°C–70°C
5V ± 10%	5V ± 10%	5V ± 10%
$V_{PP} = V_{CC}$	$V_{PP} = V_{CC}$	$V_{PP} = V_{CC}$

READ OPERATION

D.C. AND OPERATING CHARACTERISTICS

Symbol	Parameter	Limits			Unit	Conditions
		Min	Typ[3]	Max		
I_{LI}	Input Load Current			10	μA	$V_{IN} = 5.5V$
I_{LO}	Output Leakage Current			10	μA	$V_{OUT} = 5.5V$
I_{PP1}[2]	V_{PP} Current Read			5	mA	$V_{PP} = 5.5V$
I_{CC1}[2]	V_{CC} Current Standby			40	mA	$\overline{CE} = V_{IH}$
I_{CC2}[2]	V_{CC} Current Active		70	100	mA	$\overline{CE} = \overline{OE} = V_{IL}$
V_{IL}	Input Low Voltage	−.1		+.8	V	
V_{IH}	Input High Voltage	2.0		$V_{CC}+1$	V	
V_{OL}	Output Low Voltage			.45	V	$I_{OL} = 2.1$ mA
V_{OH}	Output High Voltage	2.4			V	$I_{OH} = -400$ μA

A.C. CHARACTERISTICS

Symbol	Parameter	2764-2 Limits		2764-25 & 2764 Limits		2764-30 & 2764-3 Limits		2764-45 & 2764-4 Limits		Unit	Test Conditions
		Min	Max	Min	Max	Min	Max	Min	Max		
t_{ACC}	Address to Output Delay		200		250		300		450	ns	$\overline{CE}=\overline{OE}=V_{IL}$
t_{CE}	$\overline{CE}$ to Output Delay		200		250		300		450	ns	$\overline{OE}=V_{IL}$
t_{OE}	$\overline{OE}$ to Output Delay		75		100		120		150	ns	$\overline{CE}=V_{IL}$
t_{DF}[4]	$\overline{OE}$ High to Output Float	0	60	0	85	0	105	0	130	ns	$\overline{CE}=V_{IL}$
t_{OH}	Output Hold from Addresses, $\overline{CE}$ or $\overline{OE}$ Whichever Occurred First	0		0		0		0		ns	$\overline{CE}=\overline{OE}=V_{IL}$

NOTES: 1. V_{CC} must be applied simultaneously or before V_{PP} and removed simultaneously or after V_{PP}.
2. V_{PP} may be connected directly to V_{CC} except during programming. The supply current would then be the sum of I_{CC} and I_{PP1}.
3. Typical values are for $t_A = 25°C$ and nominal supply voltages.
4. This parameter is only sampled and not 100% tested.

CAPACITANCE $T_A = 25°C$, f = 1MHz

Symbol	Parameter	Typ.[1]	Max.	Unit	Conditions
C_{IN}[2]	Input Capacitance	4	6	pF	$V_{IN}=0V$
C_{OUT}	Output Capacitance	8	12	pF	$V_{OUT}=0V$

A.C. TESTING INPUT, OUTPUT WAVEFORM

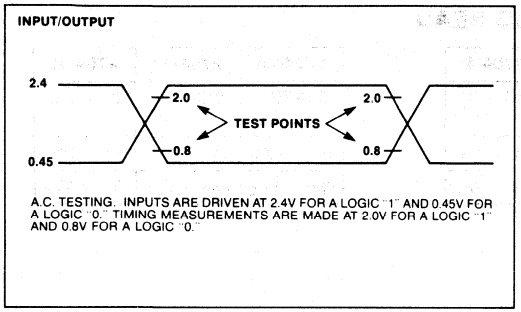

A.C. TESTING: INPUTS ARE DRIVEN AT 2.4V FOR A LOGIC "1" AND 0.45V FOR A LOGIC "0." TIMING MEASUREMENTS ARE MADE AT 2.0V FOR A LOGIC "1" AND 0.8V FOR A LOGIC "0."

A.C. TESTING LOAD CIRCUIT

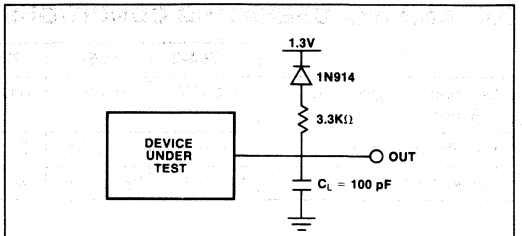

C_L = 100 pF
C_L INCLUDES JIG CAPACITANCE

A.C. WAVEFORMS

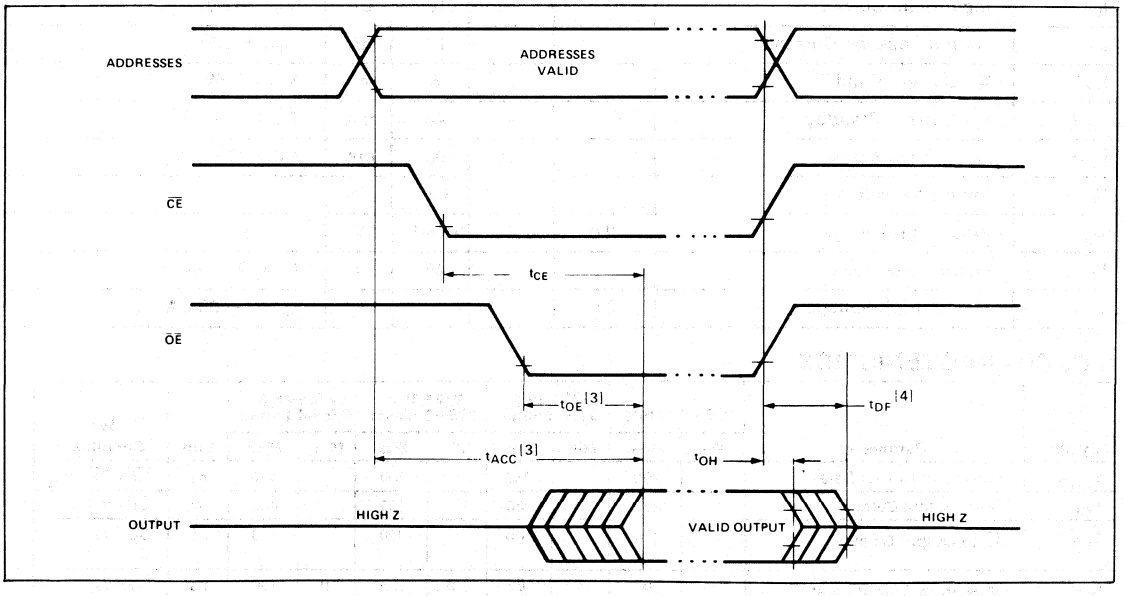

NOTES:
1. Typical values are for T_A = 25°C and nominal supply voltages.
2. This parameter is only sampled and is not 100% tested.
3. $\overline{OE}$ may be delayed up to $t_{ACC} - t_{OE}$ after the falling edge of $\overline{CE}$ without impact on t_{ACC}.
4. t_{DF} is specified from $\overline{OE}$ or $\overline{CE}$, whichever occurs first.

PROGRAMMING

D.C. PROGRAMMING CHARACTERISTICS: T_A = 25 ±5°C, V_{CC} = 5V ±5%, V_{PP} = 21V ±0.5V (see Note 1)

Symbol	Parameter	Limits				Test Conditions
		Min.	Typ.	Max.	Unit	
I_{LI}	Input Current (All Inputs)			10	μA	$V_{IN} = V_{IL}$ or V_{IH}
V_{OL}	Output Low Voltage During Verify			0.45	V	I_{OL} = 2.1 mA
V_{OH}	Output High Voltage During Verify	2.4			V	$I_{OH} = -400$ μA
I_{CC2}	V_{CC} Supply Current (Active)			100	mA	
V_{IL}	Input Low Level (All Inputs)	−0.1		0.8	V	
V_{IH}	Input High Level	2.0		$V_{CC}+1$	V	
I_{PP}	V_{PP} Supply Current			30	mA	$\overline{CE} = V_{IL} = \overline{PGM}$

A.C. PROGRAMMING CHARACTERISTICS: T_A = 25 ±5°C, V_{CC} = 5V ±5%, V_{PP} = 21V ±0.5V (see Note 1)

Symbol	Parameter	Limits				Test Conditions*
		Min.	Typ.	Max.	Unit	
t_{AS}	Address Setup Time	2			μs	
t_{OES}	$\overline{OE}$ Setup Time	2			μs	
t_{DS}	Data Setup Time	2			μs	
t_{AH}	Address Hold Time	0			μs	
t_{DH}	Data Hold Time	2			μs	
t_{DF}	Chip Enable to Output Float Delay	0		130	ns	
t_{VS}	V_{PP} Setup Time	2			μs	
t_{PW}	$\overline{PGM}$ Pulse Width During Programming	45	50	55	ms	
t_{CES}	$\overline{CE}$ Setup Time	2			μs	
t_{OE}	Data Valid from $\overline{OE}$			150	ns	

*A.C. CONDITIONS OF TEST

Input Rise and Fall Times (10% to 90%) 20ns
Input Pulse Levels ..... 0.45V to 2.4V
Input Timing Reference Level ..... 1V and 2V
Output Timing Reference Level ..... 0.8V and 2.0V

NOTE:
1. V_{CC} must be applied simultaneously or before V_{PP} and removed simultaneously or after V_{PP}.

PROGRAMMING WAVEFORMS

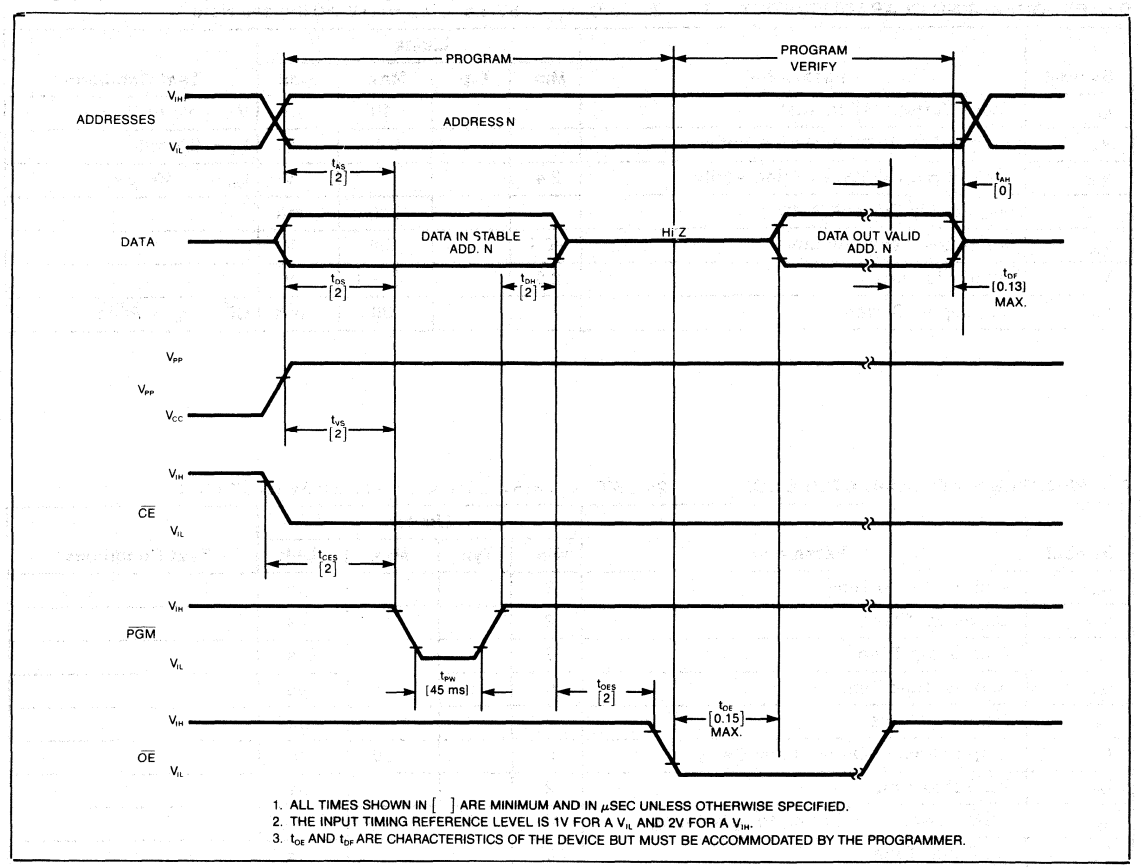

1. ALL TIMES SHOWN IN [ ] ARE MINIMUM AND IN μSEC UNLESS OTHERWISE SPECIFIED.
2. THE INPUT TIMING REFERENCE LEVEL IS 1V FOR A V_{IL} AND 2V FOR A V_{IH}.
3. t_{OE} AND t_{DF} ARE CHARACTERISTICS OF THE DEVICE BUT MUST BE ACCOMMODATED BY THE PROGRAMMER.

ERASURE CHARACTERISTICS

The erasure characteristics of the 2764 are such that erasure begins to occur when exposed to light with wavelengths shorter than approximately 4000 Angstroms (Å). It should be noted that sunlight and certain types of fluorescent lamps have wavelengths in the 3000–4000 Å range. Data show that constant exposure to room level fluorescent lighting could erase the typical 2764 in approximately 3 years, while it would take approximately 1 week to cause erasure when exposed to direct sunlight. If the 2764 is to be exposed to these types of lighting conditions for extended periods of time, opaque labels are available from Intel which should be placed over the 2764 window to prevent unintentional erasure.

The recommended erasure procedure for the 2764 is exposure to shortwave ultraviolet light which has a wavelength of 2537 Angstroms (Å). The integrated dose (i.e., UV intensity X exposure time) for erasure should be a minimum of 15 W-sec/cm². The erasure time with this dosage is approximately 15 to 20 minutes using an ultraviolet lamp with 12000 μW/cm² power rating. The 2764 should be placed within 1 inch of the lamp tubes during erasure. Some lamps have a filter on their tubes which should be removed before erasure.

DEVICE OPERATION

The five modes of operation of the 2764 are listed in Table 1. A single 5V power supply is required in the read mode. All inputs are TTL levels except for V_{PP}.

TABLE 1. MODE SELECTION

MODE \ PINS	$\overline{CE}$ (20)	$\overline{OE}$ (22)	$\overline{PGM}$ (27)	V_{PP} (1)	V_{CC} (28)	Outputs (11-13, 15-19)
Read	V_{IL}	V_{IL}	V_{IH}	V_{CC}	V_{CC}	D_{OUT}
Standby	V_{IH}	x	x	V_{CC}	V_{CC}	High Z
Program	V_{IL}	V_{IH}	V_{IL}	V_{PP}	V_{CC}	D_{IN}
Program Verify	V_{IL}	V_{IL}	V_{IH}	V_{PP}	V_{CC}	D_{OUT}
Program Inhibit	V_{IH}	x	x	V_{PP}	V_{CC}	High Z

x can be either V_{IL} or V_{IH}

READ MODE

The 2764 has two control functions, both of which must be logically active in order to obtain data at the outputs. Chip Enable ($\overline{CE}$) is the power control and should be used for device selection. Output Enable ($\overline{OE}$) is the output control and should be used to gate data to the output pins, independent of device selection. Assuming that addresses are stable, address access time (t_{ACC}) is equal to the delay from $\overline{CE}$ to output (t_{CE}). Data is available at the outputs after a delay of t_{OE} from the falling edge of $\overline{OE}$, assuming that $\overline{CE}$ has been low and addresses have been stable for at least $t_{ACC}-t_{OE}$.

Standby Mode

The 2764 has a standby mode which reduces the active power current from 100mA to 40mA. The 2764 is placed in the standby mode by applying a TTL high signal to the $\overline{CE}$ input. When in standby mode, the outputs are in a high impedance state, independent of the $\overline{OE}$ input.

Output OR-Tieing

Because EPROMs are usually used in larger memory arrays, Intel has provided 2 control lines which accommodate this multiple memory connection. The two control lines allow for:

a) the lowest possible memory power dissipation, and
b) complete assurance that output bus contention will not occur.

To use these two control lines most efficiently, $\overline{CE}$ (pin 20) should be decoded and used as the primary device selecting function, while $\overline{OE}$ (pin 22) should be made a common connection to all devices in the array and connected to the READ line from the system control bus. This assures that all deselected memory devices are in their low power standby mode and that the output pins are only active when data is desired from a particular memory device.

System Consideration

The power switching characteristics of HMOS-E EPROMs require careful decoupling of the devices. The supply current, I_{CC}, has three segments that are of interest to the system designer — the standby current level, the active current level, and the transient current peaks that are produced on the falling and rising edges of Chip Enable. The magnitude of these transient current peaks is dependent on the output capacitance loading of the device. The associated transient voltage peaks can be suppressed by complying with Intel's Two-Line Control, as detailed in Intel's Application Note, AP-72, and/or by properly selected decoupling capacitors. It is recommended that a 0.1 μF ceramic capacitor be used on every device between V_{CC} and GND. This should be a high frequency capacitor of low inherent inductance. In addition, a 4.7 μF bulk electrolytic capacitor should be used between V_{CC} and GND for each eight devices. The bulk capacitor should be located near where the power supply is connected to the array. The purpose of the bulk capacitor is to overcome the voltage droop caused by the inductive effects of the PC board-traces.

Programming

Caution: Exceeding 22V on pin 1 (V_{PP}) will damage the 2764.

Initially, and after each erasure, all bits of the 2764 are in the "1" state. Data is introduced by selectively programming "0s" into the desired bit locations. Although only "0s" will be programmed, both "1s" and "0s" can be present in the data word. The only way to change a "0" to a "1" is by ultraviolet light erasure.

The 2764 is in the programming mode when V_{PP} input is at 21V and $\overline{CE}$ and $\overline{PGM}$ are both at TTL low. The data to be programmed is applied 8 bits in parallel to the data output pins. The levels required for the address and data inputs are TTL.

For programming, $\overline{CE}$ should be kept TTL low at all times while V_{PP} is kept at 21V. When the address and data are stable, a 50 msec, active low, TTL program pulse is applied to $\overline{PGM}$ input. A program pulse must be applied at each address location to be programmed. You can program any location at any time—either individually, sequentially, or at random. The program pulse has a maximum width of 55 msec.

Programming of multiple 2764s in parallel with the same data can be easily accomplished due to the simplicity of the programming requirements. Like inputs of the paralleled 2764s may be connected together when they are programmed with the same data. A low level TTL pulse applied to the $\overline{PGM}$ input programs the paralleled 2764s.

Program Inhibit

Programming of multiple 2764s in parallel with different data is also easily accomplished. A high level $\overline{CE}$ or $\overline{PGM}$ input inhibits the other 2764s from being programmed. Except for $\overline{CE}$ (or $\overline{PGM}$), all like inputs (including $\overline{OE}$) of the parallel 2764s may be common. A TTL low level pulse applied to a 2764 $\overline{CE}$ and $\overline{PGM}$ input with V_{PP} at 21V will program that 2764.

Program Verify

A verify should be performed on the programmed bits to determine that they were correctly programmed. The verify is accomplished with $\overline{CE}$ and $\overline{OE}$ at V_{IL}. However, $\overline{PGM}$ is at V_{IH}.

27128
128K (16K x 8) UV ERASABLE PROM

- **200 ns (27128-2) Maximum Access Time . . . HMOS*-E Technology**
- **Compatible to High-Speed 8 MHz 8086-2 MPU . . . Zero WAIT State**
- **Two-Line Control**
- **Pin Compatible to 2764 EPROM**
- **Industry Standard Pinout . . . JEDEC Approved**
- **±10%V_{CC} Tolerance Available**

The Intel 27128 is a 5V only, 131,072-bit ultraviolet erasable and electrically programmable read-only memory (EPROM). The standard 27128 access time is 250 ns with speed selection available at 200 ns. The access time is compatible to high-performance microprocessors, such as Intel's 8 MHz 8086-2. In these systems, the 27128 allows the microprocessor to operate without the addition of WAIT states.

An important 27128 feature is the separate output control, Output Enable (OE) from the Chip Enable control (CE). The OE control eliminates bus contention in multiple-bus microprocessor systems. Intel's Application Note AP-72 describes the microprocessor system implementation of the OE and CE controls on Intel's EPROMs. AP-72 is available from Intel's Literature Department.

The 27128 has a standby mode which reduces the power dissipation without increasing access time. The active current is 150 mA, while the standby current is only 45 mA. The standby mode is achieved by applying a TTL-high signal to the CE input.

±10% V_{CC} tolerance is available as an alternative to the standard ±5% V_{CC} tolerance for the 27128. This can allow the system designer more leeway in terms of his power supply requirements and other system parameters.

The 27128 is fabricated with HMOS*-E technology, Intel's high-speed N-channel MOS Silicon Gate Technology.

*HMOS is a patented process of Intel Corporation.

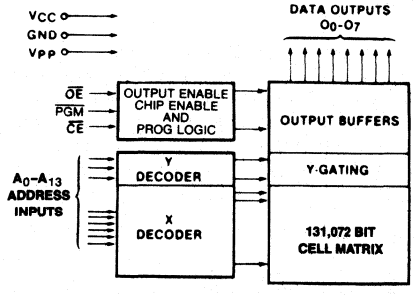

Figure 1. Block Diagram

PIN NAMES

A_0–A_{13}	ADDRESSES
$\overline{CE}$	CHIP ENABLE
$\overline{OE}$	OUTPUT ENABLE
O_0-O_7	OUTPUTS
$\overline{PGM}$	PROGRAM
N.C.	NO CONNECT

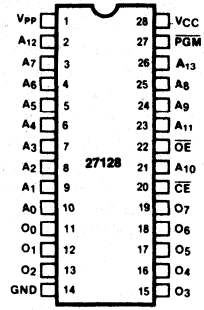

Figure 2. Pin Configuration

Intel Corporation assumes no responsibility for the use of any circuitry other than circuitry embodied in an Intel product. No other circuit patent licenses are implied.

Intel Corporation, 3065 Bowers Avenue, Santa Clara, California 95051

©Intel Corporation, 1981

2815*
16K (2K X 8) ELECTRICALLY ERASABLE PROM

- **Reliable Floating Gate Technology**
- **Cost-Effective Non-Volatile Memory Alternative**
- **Erase/Write Specifications Guaranteed 0–70°C**
- **Very Fast Access Times**
  —2815, 250 ns Max.
  —2815-3, 350 ns
  —2815-4, 450 ns
- **Two-Line Control**
- **Low Power Dissipation**
  —Active Current, 110 mA
  —Standby Current, 50 mA
- **Compatible with 2716 EPROM**
- **Simple 21V Programming Interface**

The Intel 2815 is a 2048-word by 8-bit Electrically Eraseable Programmable Read Only Memory (E^2PROM). It is fabricated using Intel's FLOTOX cell design and powerful HMOS-E† technology. The 2815's E^2 functionality enables in-circuit reprogrammable memory flexibility, while maintaining the non-volatility of the data stored.

The Intel 2815 is easily erased and written in-circuit. Byte and chip erasure are accomplished with a single 50 mS pulse after which data can be written a byte at a time. Because of its unique architecture, selection of the chip to be erased or written is performed with the same address control circuitry as that used for read operations.

Read operations with the 2815 are performed at standard 5V TTL levels. The 250 ns access time is fast enough so that the 2815 can be interfaced to processor system busses with no wait states. The microprocessor to 2815 interface is achieved with a minimum of external circuitry.

The 2815 was designed in accordance with Intel's byte-wide pinout philosophy and therefore conforms to the JEDEC approved byte-wide family standard. The two-line control architecture of this standard ensures elimination of bus contention in high-speed microprocessor systems. The 2815 is pin-for-pin compatible with the Intel 2816 E^2PROM and it is therefore directly upgradable for those systems requiring faster write times in the future.

Application of the 2815 for program storage, error logging, or prototyping memory maximizes the user potential to reduce service costs. As a program storage medium, users are able to update firmware remotely, saving the costs of increased parts inventories and more frequent service calls. Revision levels, service call logs, and system configuration parameters can also be stored non-volatilely, so that they can be easily accessed or updated on a service call. The 2815 is also an excellent alternative to CMOS RAMs and batteries in systems requiring non-volatile parameter storage. The 2815's many features, wide temperature range, extremely reliable operation, and design-in ease combine to give you a powerful tool for adding dramatically increased functionality to your systems.

†HMOS-E is a patented process of Intel Corporation.
*PART(S) ALSO AVAILABLE IN EXTENDED TEMPERATURE RANGE FOR INDUSTRIAL GRADE APPLICATIONS.

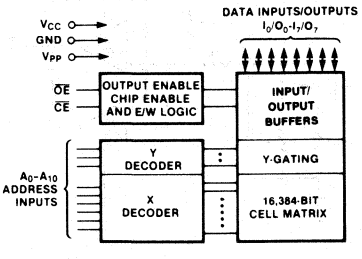

2815 Functional Block Diagram

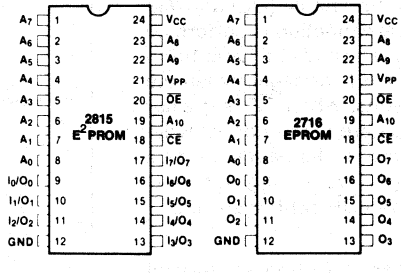

Pin Configuration

PIN NAMES	
A_0-A_{10}	ADDRESSES
$\overline{CE}$	CHIP ENABLE
$\overline{OE}$	OUTPUT ENABLE
O_0-O_7	DATA OUTPUTS
I_0-I_7	DATA INPUTS
V_{PP}	PROGRAM VOLTAGE

Intel Corporation Assumes No Responsibilty for the Use of Any Circuitry Other Than Circuitry Embodied in an Intel Product. No Other Circuit Patent Licenses are Implied.
©INTEL CORPORATION, 1981.

DEVICE OPERATION

The 2815 has 6 modes of operation, listed in Table 1. All operational modes are designed to provide maximum microprocessor compatibility and system consistancy. The device pinout is a part of Intel's JEDEC approved byte-wide Non-Volatile Memory family, allowing appropriate and cost-effective density and functionality upgrades.

All control input signals are TTL compatible with the exception of chip erase. A 9 to 15V signal is required at pin 20 to enable the chip erase function. The V_{PP} voltage must also be pulsed to 21V during chip erase, byte erase, and byte write, and held to 4 to 6 volts during the read and standby modes.

Table 1. Mode Selection $V_{CC}=+5V$

Mode \ Pin	$\overline{CE}$ (18)	$\overline{OE}$ (20)	V_{PP} (21)	Inputs/ Outputs
READ	V_{IL}	V_{IL}	+4 to +6	D_{OUT}
STANDBY	V_{IH}	DON'T CARE	+4 to +6	HIGH Z
BYTE ERASE	V_{IL}	V_{IH}	+21	$D_{IN}=V_{IH}$
BYTE WRITE	V_{IL}	V_{IH}	+21	D_{IN}
CHIP ERASE	V_{IL}	+9 to +15V	+21	[10] $D_{IN}=V_{IH}$
E/W INHIBIT	V_{IH}	DON'T CARE	+4 to +22V	HIGH Z

ERASE MODE

The 2815 is erased and reprogrammed electrically rather than optically, as is required with EPROMs. By applying a pulse to the output enable ($\overline{OE}$) and V_{PP} pin of the 2815, the chip erase function is performed and all 2K bytes of data are returned to a logic 1 (FF) state. The chip erase function is engaged when the $\overline{OE}$ pin is raised above 9 volts. When $\overline{OE}$ is greater than 9 volts and $\overline{CE}$ and V_{PP} are in the normal write mode, the entire array is erased. The data input pins must be held to a TTL high level during this time. Figure 1 is the recommended $\overline{OE}$ control switch.

Byte erasure is accomplished by writing a pattern of FF to the byte being addressed while the $\overline{OE}$ pin is held at a high TTL level.

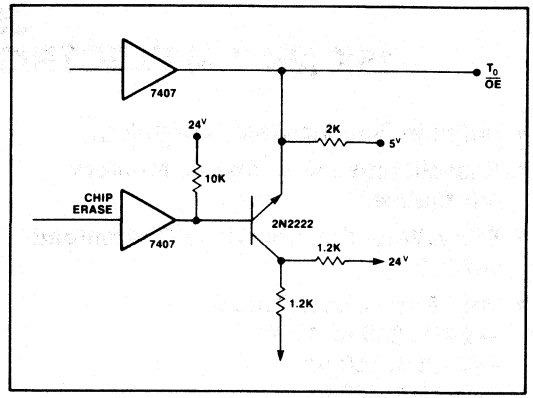

Figure 1. $\overline{OE}$ Chip Erase Control

WRITE MODE

To write a byte of data, the selected address and data are provided at the inputs of the 2815 (all at TTL levels). The write is then performed when the V_{PP} line is raised.

The shape of the V_{PP} pulse is important in ensuring long term reliability and operating characteristics. V_{PP} must be raised to 21V through an RC waveform (exponential). See figure 2a for a specific diagram of the V_{PP} pulse. The T_{PRC} specification has been designed to accommodate changes of RC due to temperature variations. Figure 2 shows a recommended V_{PP} switch design, useful where programming will occur over the specified temperature and operating voltage conditions. The circuitry shown in this figure will provide sufficient drive for four 2815 devices. The circuitry in Figure 3 shows the additional circuitry needed to provide enough drive for eight 2815 devices.

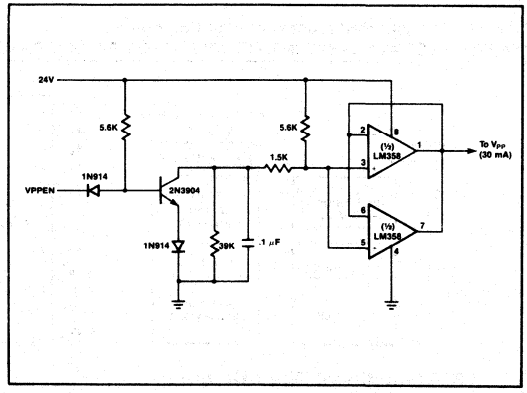

Figure 2. V_{PP} Switch Design—4 Devices

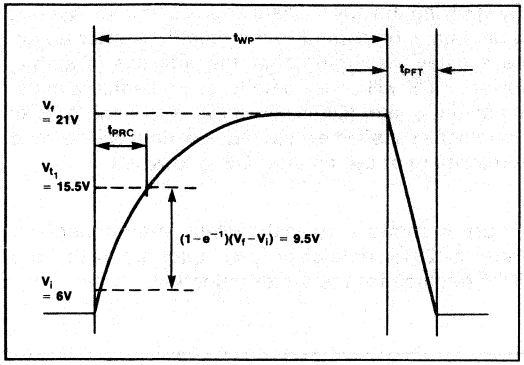

Figure 2a. V_{PP} Waveform

For systems where 24V is not available as a supply voltage, the design of a step-up regulator has been included (Figure 4). This design provides the necessary voltage and current to allow the programming of eight 2815 devices.

A characteristic of all E^2PROMs is that the total number of erase/write cycles is not unlimited. The 2815 has been designed and manufactured to meet applications requiring up to 10^4 erase/write cycles.

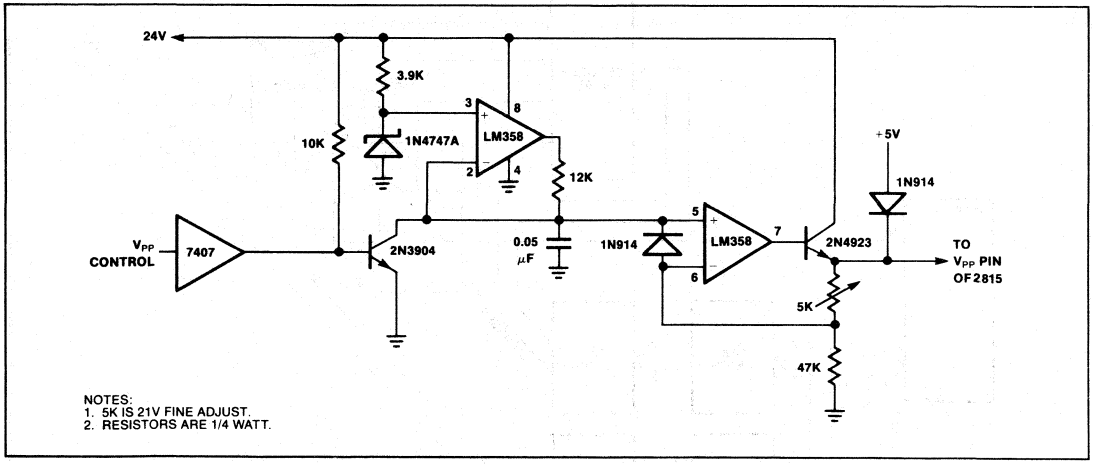

Figure 3. V_{PP} Switch Design—8 Devices

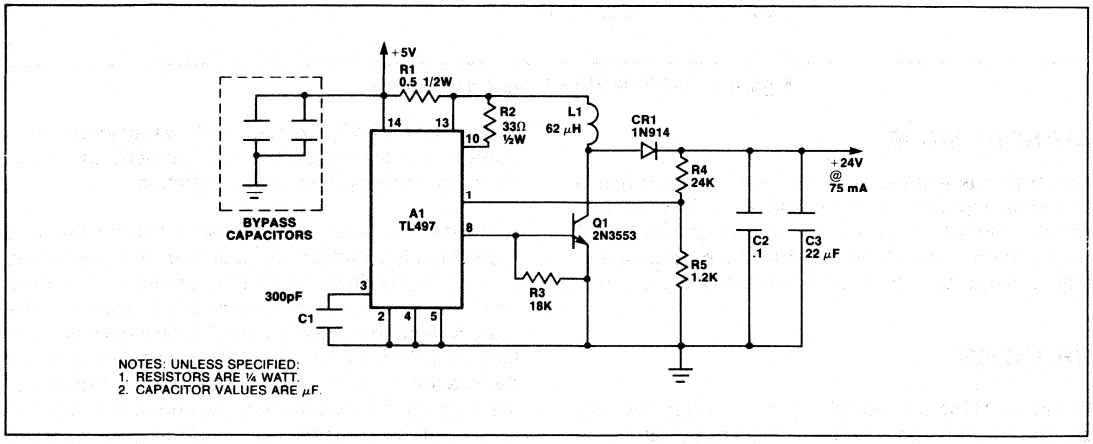

Figure 4. Step-up Regulator Converts +5V Into +24V

READ OPERATION

Optimal system efficiency depends to a great extent on a tightly coupled microprocessor/memory interface. The E^2PROM device should respond rapidly with data to allow the highest possible CPU performance. Program execution directly out of electrically eraseable memory has never before been possible. The 2815 opens this new, powerful application segment.

The 2815 uses Intel's proven 2-line control architecture for read operations. Both $\overline{CE}$ and $\overline{OE}$ must be at logic low levels to obtain information from the device.

By applying the appropriate address to lines A_0–A_{10}, 8-bit data is presented at the data lines after an access delay. Assuming that the address is stable, lowering $\overline{CE}$ will cause data to be presented a maximum of t_{acc} later ($\overline{OE}$ is low at $t_{acc}-t_{OE}$ time). With all conditions satisfied except $\overline{OE}$, low data will be valid a maximum of t_{OE} ns after $\overline{OE}$ is lowered.

Figure 5 shows a typical system interconnection. Here, the 2815 contains program information that the 8088 requires for the system function.

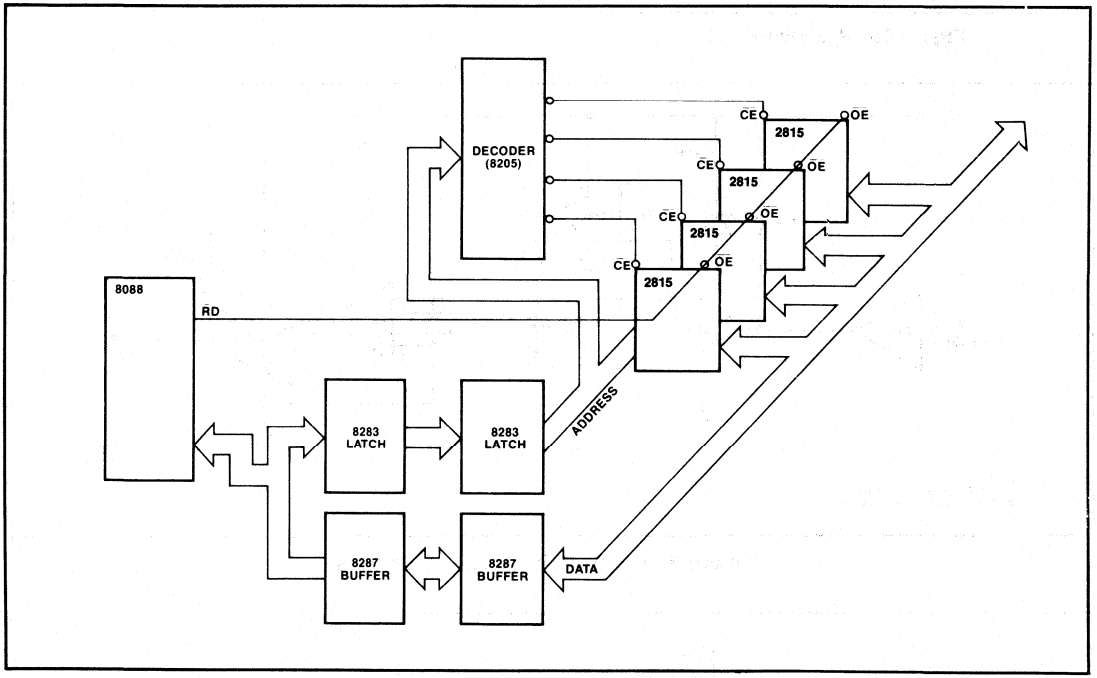

Figure 5. iAPX 88/2815 Read Architecture

STANDBY MODE

The 2815 has a standby mode which reduces active power dissipation by 50%. The 2815 is placed in standby mode by applying a TTL high signal to the $\overline{CE}$ input. When in the standby mode, the outputs are in high impedance state, independent of the $\overline{OE}$ input.

OR-TIEING

Because 2815s are usually used in larger memory arrays, Intel has provided a 2-line control architecture that accommodates the use of multiple memory connections. The 2-line control allows removal of bus contention from the system environment and much easier memory system implementation.

To most effectively use these two control lines, it is recommended that $\overline{CE}$ be decoded from addresses as the primary device selection function. $\overline{OE}$ should be made a common connection to all devices in the system, and connected to the RD line from the system bus. This assures that all deselected memory devices are in their low power standby mode and that the output pins are only active when data is desired from a particular memory device. Timing for a system configured in this manner is illustrated in Figure 6.

PIN COMPATIBILITY

The 2815 pinout has been designed for compatibility with present and future memory products. The 2815 E^2PROM is a member of Intel's JEDEC standard, byte-wide memory family which allows density upgrades, functional interchange, and extended product life. Figure 7 shows this JEDEC 28-pin site approach.

APPLICATIONS

The 2815 has been designed to meet those applications where write and erase speed are not critical system parameters. Many of these applications exist in systems where E^2 is used to increase the system's serviceability. The 2815 is effective as a program storage, ROM patch, error logging, diagnostics, or signature storage medium.

Program Storage—The use of the 2815 for program storage enables the periodic update of firmware via a remote telecom link. In this application, the 2815 array is totally erased and new firmware containing advanced features, software corrections, or more efficient routines are loaded into the E^2PROMs from the factory. Costly service calls to replace firmware stored in ROMs are thereby eliminated.

ROM Patch—Using the 2815 as branch table and firmware patch storage medium enables the user to store major routines in ROM, but maintain the flexibility to remotely update the code as a whole. This capability is illustrated in Figure 8. In Figure 8a, a system's structured firmware is shown stored in E^2PROM and ROM. The branch table, stored in 2815 devices, contains a series of calls to routines stored in ROM. These are called in sequence.

During the course of a product's life, faults could be discovered in the ROM routines. By remotely changing the branch table and adding a firmware patch, physical ROM swapping is avoided to correct these faults. This type of update (depicted in Figure 8b) is easily implemented with the 2815. This powerful application of the 2815 can save you the costs of ordering new ROMs, distributing them to a service force, and servicing the customer's equipment.

Data Logging—The 2815 can be used to store randomly occurring error data. This data, which points to hard-to-detect system faults, can be directly loaded into the E^2PROM. A record is thereby accumulated from which a serviceperson can spot troublesome timing paths or failing components. Faster time to repair and more productive preventative maintenance result.

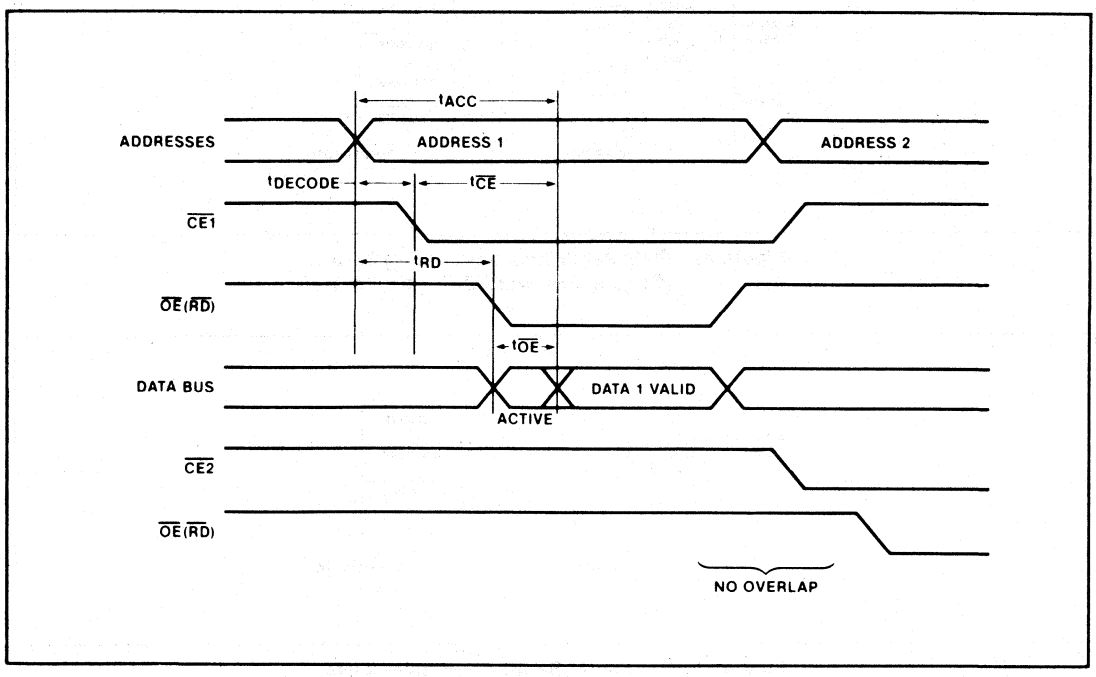

Figure 6. Two-Line Control Architecture

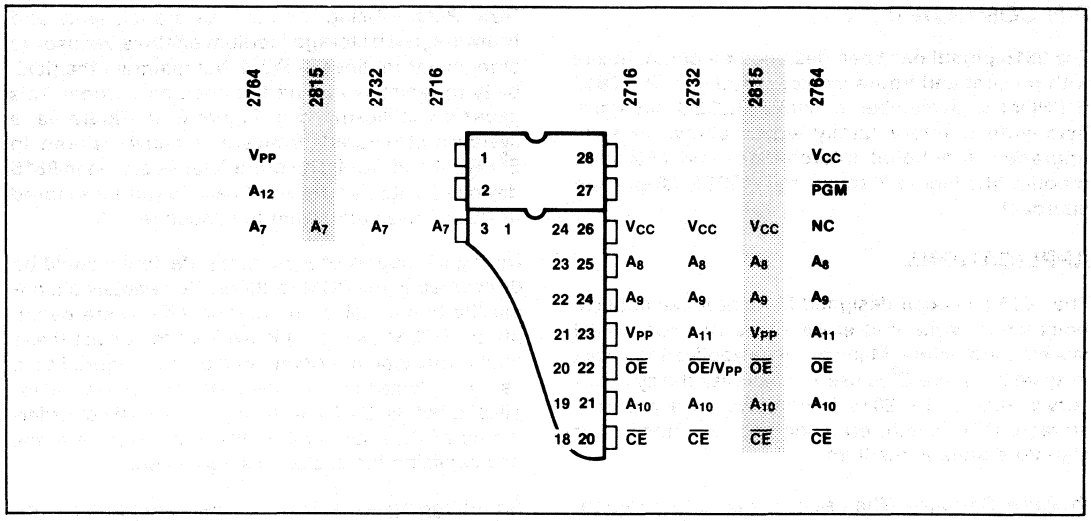

Figure 7. JEDEC 28-Pin Site Byte-Wide Philosophy

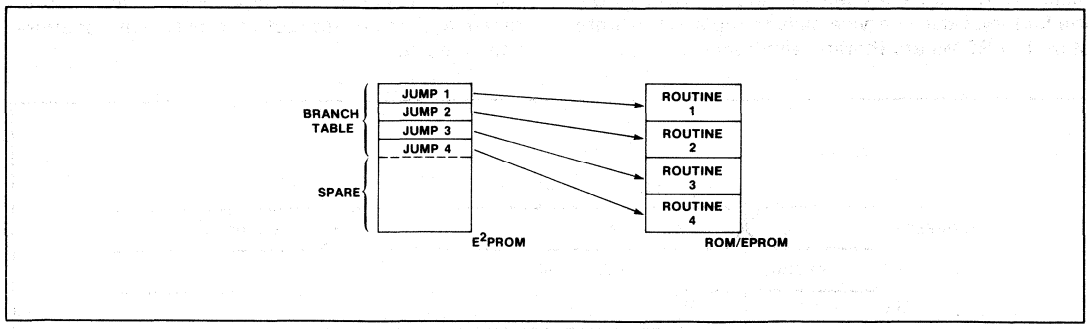

Figure 8a. ROM Patch Technique Using 2815 (Original Firmware Configuration)

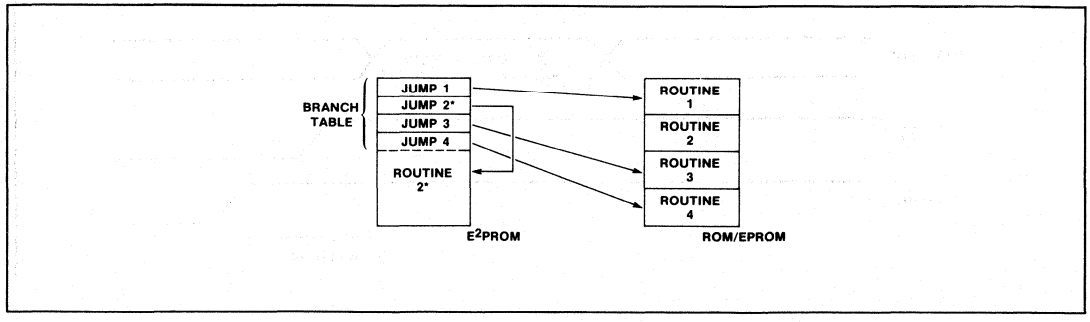

Figure 8b. Routine 2* Replaces Routine 2 (No Hardware Changes)

The 2815 can also store records of service and revision levels of the equipment in the end system itself. This process would distribute the record keeping to the user site where the records are immediately accessible.

System revision levels and repair records can then be accessed remotely, before a service call is made. A serviceperson can then be assured of carrying the correct equipment and spares for that particular installation. The costs incurred for managing this system documentation are also reduced.

Diagnostics—The 2815 is an excellent storage medium for diagnostics routines used by a diagnostic processor. This processor, concurrently with a main processor, would execute continuous machine diagnostics. Implemented with E^2 memory and a common interface, this diagnostic processor could be made generic for many user systems. Routines would be loaded into the 2815s on the diagnostic processor to test a particular user's system. After that user's system is debugged, the same diagnostic processor could be removed, have new routines loaded into the 2815s, and be inserted for the testing of another user's system.

Several cost-saving benefits result. By using the common diagnostic processor, reduced types of test equipment are required for service calls. Additionally, diagnostic routines would not have to be static. New, more powerful routines could be written during a production system's life so that faster diagnostics and repair of those systems would be possible.

Signature Storage—A powerful diagnostic tool is the use of system signatures to speed the time of repair. When a system is first shipped a good signature, one obtained by exercizing the properly functioning system's circuitry, is stored in 2815 E^2PROM. This application is shown in Figure 9a.

During the course of the equipment's life, a failure may occur which requires identification. A new signature is thus generated which will contain data from the failed circuitry. A comparison of the good and bad signatures is then sent to the factory via telephone, where the failed circuitry is identified (Figure 9b). One repair scenario is to have a serviceperson sent, with the correct equipment and spares, to quickly replace the faulty module. Another possibility is to have the customer do his own service by swapping the faulty board.

The power of the 2815 is especially evident for this application when there are several revision levels or options existing for the end equipment. This is particularly true when the users can configure or expand the system themselves. A common 2815 memory module can be used to store all revisions of good signatures. An example of this kind of situation is depicted in Figure 9c where a user has opted for a new RAM card. The new card is simply inserted and a new signature stored in the same 2815 memory array.

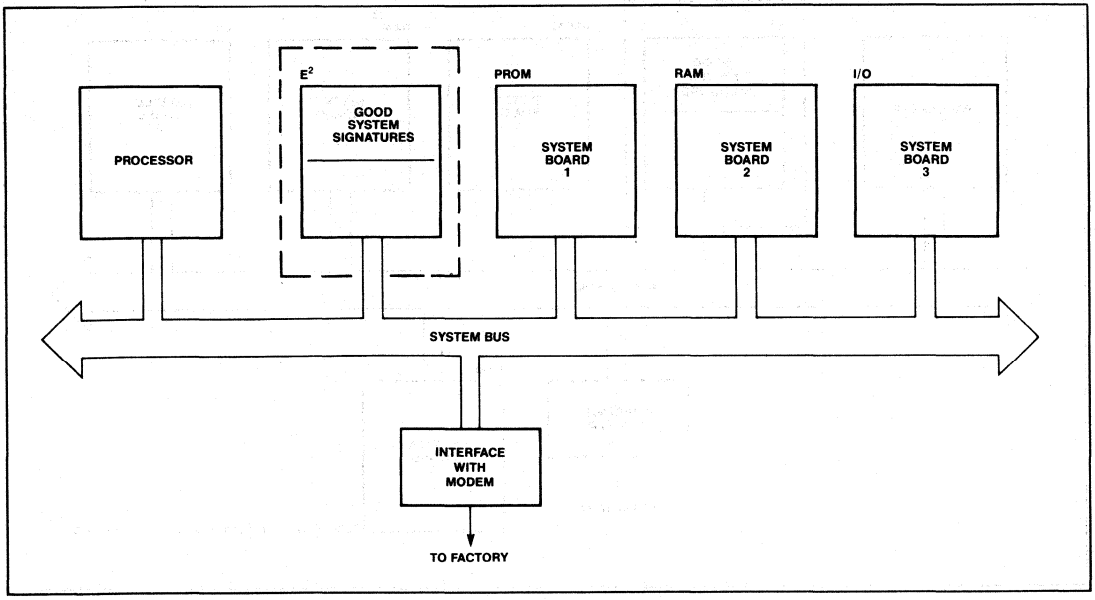

Figure 9. System Is Operational

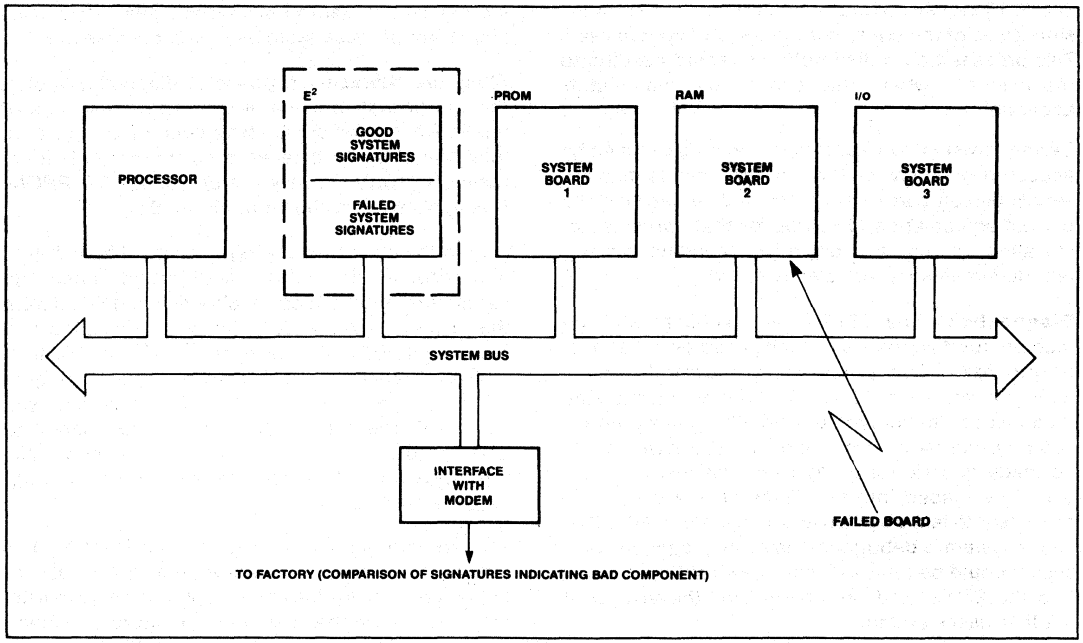

Figure 9b. Component in Board 2 Fails

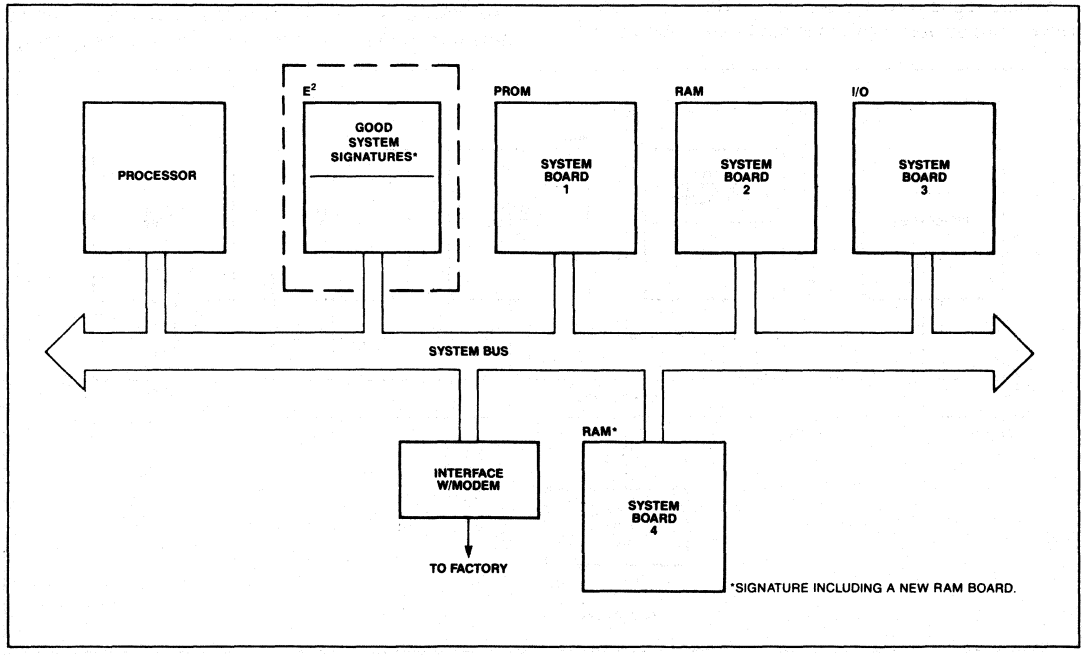

Figure 9c. Updated Good System Signature Is Stored

AFN-02025A

AVAILABLE LITERATURE

Much of the literature which has been written about operation of the 2816 is equally applicable to the 2815. A brief synopsis of some applicable notes is given below as a reference to system designers and architects. These notes and others will be available in the E^2PROM Family Applications Handbook II.

AP100—Reliability Aspects of a Floating Gate E^2PROM

AP-101—The 2816 Electrical Description

AP-102—2816 Microprocessor Interface Considerations

AP-103—Programming E^2PROM with a Single 5-Volt Power Supply

AP-107—Hardware and Software Download Techniques with 2816

AP135—8298 Integrated E^2 Controller

AP136—A Multibus-Compatible 2816 E^2PROM Memory Board

AP137—8298 Functional Specification and Firmware Description

AP138—A 2716 to 2816 Programming Socket Adapter

To obtain this literature, contact your local Field Sales office. Your Field Applications Engineer is available to discuss all aspects of the Intel E^2 product line with you.

ABSOLUTE MAXIMUM RATINGS*

Temperature Under Bias ..... −10°C to +80°C
Storage Temperature ..... −65°C to +100°C
All Input or Output Voltages with Respect to Ground ..... +6V to −0.3V
V_{PP} Supply Voltage with Respect to Ground During Write/Erase ..... +22.5V to −0.1V
Maximum Duration of V_{PP} Supply at 22V During E/W Inhibit ..... 24 Hrs.
Maximum Duration of V_{PP} Supply at 22V During Write/Erase ..... 70 ms [6]

NOTICE: Stresses above those listed under "Absolute Maximum Ratings" may cause permanent damage to the device. This is a stress rating only and functional operation of the device at these or any other conditions above those indicated in the operational sections of this specification is not implied. Exposure to absolute maximum rating conditions for extended periods may affect device reliability.

D.C. AND A.C. OPERATING CONDITIONS DURING READ AND WRITE

	2815, 2815-3, 2815-4
Temperature Range	0°C–70°C
V_{CC} Power Supply[7]	5V ± 5%

D.C. CHARACTERISTICS

READ

Symbol	Parameter	Min.	Typ.[6]	Max.	Units	Test Conditions
I_{LI}	Input Leakage Current			10	μA	V_{IN} = 5.25V
I_{LO}	Output Leakage Current			10	μA	V_{OUT} = 5.25V
I_{CC2}	V_{PP} Current Active		50	110	mA	$\overline{OE}$ = $\overline{CE}$ = VIL
I_{CC1}	V_{PP} Current (Standby)		25	50	mA	$\overline{CE}$ = VIL
$I_{PP(R)}$	V_{PP} Current (Read)			5	mA	$\overline{CE}$ = VIL, V_{PP} 4 to 6
V_{IL}	Input Low Voltage	−0.1		.8	V	
V_{IH}	Input High Voltage	2.0		V_{CC} +1	V	
V_{OL}	Output Low Voltage			.45	V	I_{OL} = 2.1 mA
V_{OH}	Output High Voltage	2.4			V	I_{OH} = −400 μA
V_{PP}	Read Voltage	4		6	V	

WRITE

Symbol	Parameter	Min.	Typ.[1]	Max.	Units	Test Conditions
V_{PP}	Write/Erase Voltage	20	21	22	V	
V_{OE}	$\overline{OE}$ Voltage (Chip Erase)	9		15	V	$\overline{CE}$ = VIL
$I_{PP(W)}$	V_{PP} Current (Byte Write/Erase)		9	15	mA	I_{OE} = 10 μA
$I_{PP(C)}$	V_{PP} Current (Chip Erase)		3	5	mA	
$I_{PP(I)}$	V_{PP} Current Inhibit			5	mA	V_{PP} = 22, $\overline{CE}$ = VIH

For footnotes see page 13.

CAPACITANCE[1] (T_A = 25°C, f = 1 MHz)

Symbol	Parameter	Typ.	Max.	Units	Test Conditions
C_{IN}	Input Capacitance	5	10	pF	V_{IN} = 0V
C_{OUT}	Output Capacitance		10	pF	V_{OUT} = 0V
$C_{V_{CC}}$	V_{CC} Capacitance		500	pF	$\overline{OE}$ = $\overline{CE}$ = V_{IH}
$C_{V_{PP}}$	V_{PP} Capacitance		50	pF	$\overline{OE}$ = $\overline{CE}$ = V_{IH}

A.C. TEST CONDITIONS

Output Load: 1TTL gate and C_L = 100 pF
Input Pulse Levels: 0.45 to 2.4V
Timing Measurement Reference Level: Input 1V and 2V
Output .8V and 2V

A.C. CHARACTERISTICS

READ

Symbol	Parameter	2815 Limits			2815-3 Limits			2815-4 Limits			Units	Test Conditions
		Min.	Typ.[1]	Max.	Min.	Typ.[1]	Max.	Min.	Typ.[1]	Max.		
t_{ACC}	Address to Output Delay		200	250		300	350		400	450	ns	$\overline{CE} = \overline{OE} = V_{IL}$
t_{CE}	$\overline{CE}$ to Output Delay		200	250		300	350		400	450	ns	$\overline{OE} = V_{IL}$
t_{OE}	Output Enable to Output Delay	10		100	10		120	10		150	ns	$\overline{CE} = V_{IL}$
t_{DF}	Output Enable High to Output Float	0		80	0		100	0		130	ns	$\overline{CE} = V_{IL}$
t_{OH}	Output Hold from Addresses, $\overline{CE}$ or $\overline{OE}$ Whichever Occurred First	0			0			0			ns	$\overline{CE} = \overline{OE} = V_{IL}$

WRITE

Symbol	Parameter	Limits			Units	Test Conditions
		Min.	Typ.[1]	Max.		
t_{AS}	Add to V_{PP} Set-Up Time	150			ns	
t_{CS}	C_E to V_{PP} Set-Up Time	150			ns	
t_{DS}(8)	Data to V_{PP} Set-Up Time	0			ns	
t_{DH}(8)	Data Hold Time	50			ns	$V_{PP} = 6V$
t_{WP}(6)	Write Pulse Width	50		70	ms	
t_{WR}	Write Recovery Time	50			ns	$V_{PP} = 6V$
t_{OS}	Chip Erase Set-Up Time	0			ns	$V_{PP} = 6V, V_{OE} = 9V$
t_{OH}	Chip Erase Hold Time	0			ns	$V_{PP} = 6V, V_{OE} = 9V$
t_{PRC}	V_{PP} RC Time Constant	450	600	750	μS	
t_{PFT}(5)	V_{PP} Fall Time			100	μS	$V_{PP} = 6V$
t_{BOS}	Byte Erase/Write Set-Up Time	0			ns	$V_{PP} = 6V$
t_{BOH}	Byte Erase/Write Hold Time	0			ns	$V_{PP} = 6V$

WAVEFORMS

READ

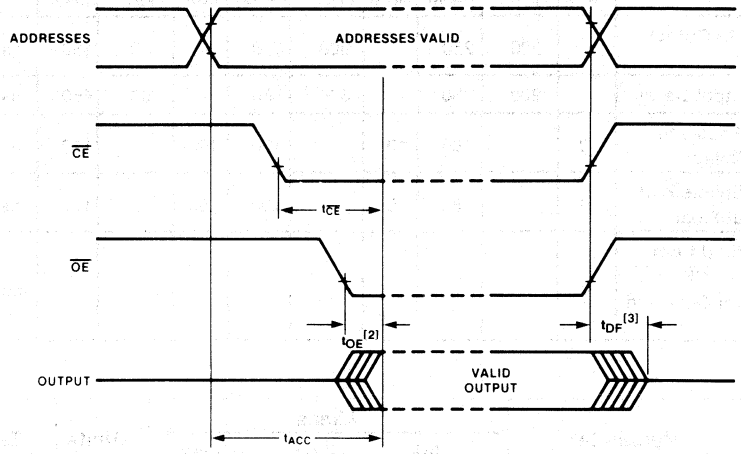

BYTE WRITE

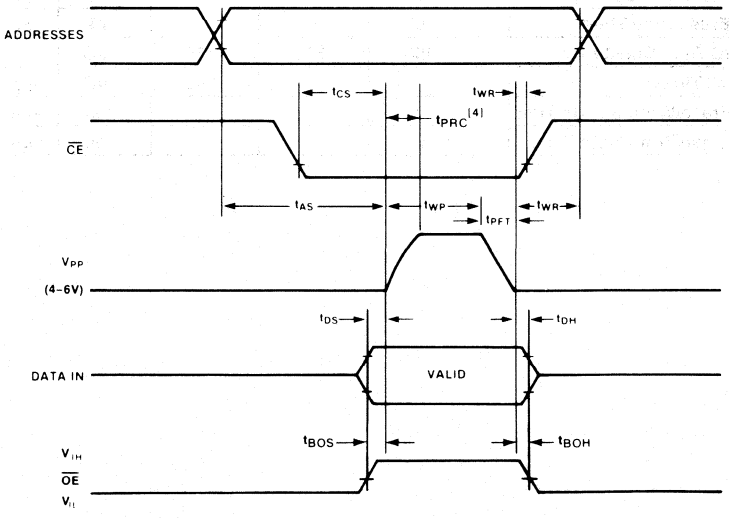

For footnotes see page 13.

WAVEFORMS (Continued)

CHIP ERASE

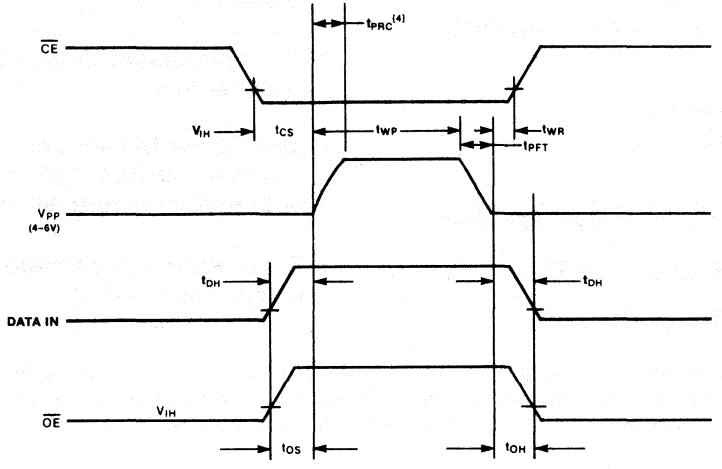

NOTES:

1. This parameter is only sampled and not 100% tested.
2. OE may be delayed up to 300 ns after falling edge of $\overline{CE}$ without impact on t_{ACC} for 2815.
3. t_{DF} is specified from $\overline{OE}$ or $\overline{CE}$ whichever occurs first.
4. The rising edge of V_{PP} must follow an exponential waveform. That waveform's time constant is specified as t_{PRC}. See Intel's AP-102 for details.
5. To allow immediate read verify capability, V_{PP} can be driven low in less than 50 ns. See AP-101 for more information.
6. Adherence to TWP specification is important to device reliability.
7. To prevent spurious device erasure or write, V_{CC} must be applied simultaneously or before 21-volt application of V_{PP}. V_{PP} cannot be driven to 21 volts without previously applying VCC.
8. The data-in set up and hold times are identical for byte erase and chip erase.

2816
16K (2K x 8) ELECTRICALLY ERASABLE PROM

- **HMOS*-E FLOTOX Cell Design**
- **Reliable Floating Gate Technology**
- **Very Fast Access Time:**
  —2816, 250 ns Max.
  —2816-3, 350 ns Max.
  —2816-4, 450 ns Max.
- **Single Byte Erase/Write Capability**
- **10 ms Byte Erase/Write Time**
- **Chip Erase Time of 10 ms**
- **Conforms to JEDEC Byte-Wide Family Standard**
- **Microprocessor Compatible Architecture**
- **Low Power Dissipation:**
  —Active Current, 110 mA Max.
  —Standby Current, 50 mA Max.
- **Erase/Write Specifications Guaranteed 0-70°C**

The Intel® 2816 is a 16,384 bit electrically erasable programmable read-only memory (E^2PROM). The 2816 can be easily erased and reprogrammed on a byte basis. A chip erase function is also provided. The device operates from a 5-volt power supply in the read mode; writing and erasing are accomplished by providing a single 21-volt pulse.

The 2816, with its very fast read access speed, is compatible with high performance microprocessors such as the 8086-2. Using the fast access speed allows zero wait operation in large system configurations.

The electrical erase/write capability of the 2816 makes it ideal for a wide variety of applications requiring in-system, non-volatile erase and write. Never before has in-system alterability been possible with this combination of density, performance and flexibility. Any byte can be erased or written in 10 ms without affecting the data in any other byte. Alternatively, the entire memory can be erased in 10 ms allowing the total time to rewrite all 2K bytes to be cut by 50%. The 2816 provides a significant increase in flexibility allowing new applications (dynamic reconfiguration, continuous calibration) never before possible.

The 2816 E^2PROM possesses Intel's 2-line control architecture to eliminate bus contention in a system environment. A power down mode is also featured; in the standby mode power consumption is reduced by over 55% without increasing access time. The standby mode is achieved by applying a TTL-high signal to the CE input.

Byte erase and write are controlled entirely by TTL signal levels, yet require no control signals beyond $\overline{CE}$ and $\overline{OE}$. For byte write a selected chip ($\overline{CE}$ = TTL low) senses the 21V V_{PP} pulse and automatically goes into write mode. Byte erase mode is identical to byte write except that data-in must be all logic ones (TTL-high). Never before has an in-system alteration of non-volatile information been implemented with such simple control.

*HMOS-E is a patented process of Intel Corporation.

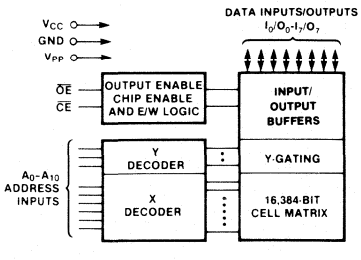

Figure 1. 2816 Functional Block Diagram

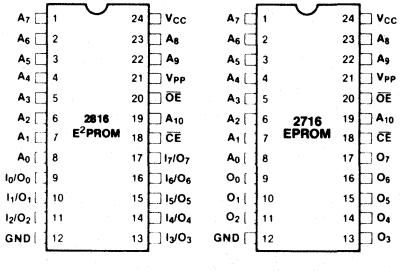

Figure 2. Pin Configuration

PIN NAMES	
A_0-A_{10}	ADDRESSES
$\overline{CE}$	CHIP ENABLE
$\overline{OE}$	OUTPUT ENABLE
O_0-O_7	DATA OUTPUTS
I_0-I_7	DATA INPUTS
V_{PP}	PROGRAM VOLTAGE

Intel Corporation Assumes No Responsibility for the Use of Any Circuitry Other Than Circuitry Embodied in an Intel Product. No Other Circuit Patent Licenses are implied.

DEVICE OPERATION

The 2816 has six modes of operation, listed in Table 1. All operational modes are designed to provide maximum microprocessor compatibility and system consistency. The device pinout is a part of Intel's JEDEC approved byte wide Non-Volatile Memory family, allowing appropriate and cost-effective density and functionality upgrades.

All control inputs are TTL compatible with the exception of chip erase. The V_{PP} voltage must be pulsed to 21 volts during write and erase, and held to 4 to 6 volts during the other two modes.

Table 1. Mode Selection $V_{CC}=+5V$

PIN / MODE	$\overline{CE}$ (18)	$\overline{OE}$ (20)	V_{PP} (21)	INPUTS/ OUTPUTS
READ	V_{IL}	V_{IL}	+4 to +6	D_{OUT}
STANDBY	V_{IH}	DON'T CARE	+4 to +6	HIGH Z
BYTE ERASE	V_{IL}	V_{IH}	+21	$D_{IN}=V_{IH}$
BYTE WRITE	V_{IL}	V_{IH}	+21	D_{IN}
CHIP ERASE	V_{IL}	+9 to +15V	+21	[10] $D_{IN}=V_{IH}$
E/W INHIBIT	V_{IH}	DON'T CARE	+4 to +22V	HIGH Z

Read Mode

Optimal system efficiency depends to a great extent on a tightly coupled microprocessor/memory interface. The E^2PROM device should respond rapidly with data to allow the highest possible CPU performance. The 2816 satisfies this high performance requirement because of access times typically less than 250 ns. Program execution directly out of electrically erasable memory has never before been possible; the 2816 opens this new, powerful applications segment.

The 2816 uses Intel's proven 2-line control architecture for read operation. Figure 3 shows the timing disadvantages of a single-line control architecture. 2-line control, shown in Figure 4, has been developed by Intel to solve this bus contention and the associated system reliability problems. Both $\overline{CE}$ and $\overline{OE}$ must be at logic low levels to obtain information from the device. Chip enable ($\overline{CE}$) is the power control pin and should be used for device selection. The output enable ($\overline{OE}$) pin serves to gate internal data to the output pins. Assuming that the address inputs are stable, address access time (t_{ACC}) is equal to the delay from $\overline{CE}$ to output (t_{CE}). Data is available at the outputs after a time delay of t_{OE}, assuming that $\overline{CE}$ has been low and addresses have been stable for at least $t_{ACC}-t_{OE}$.

Figure 5 shows a typical system interconnection. Here the 2816 contains program information that the 8086 requires for system function.

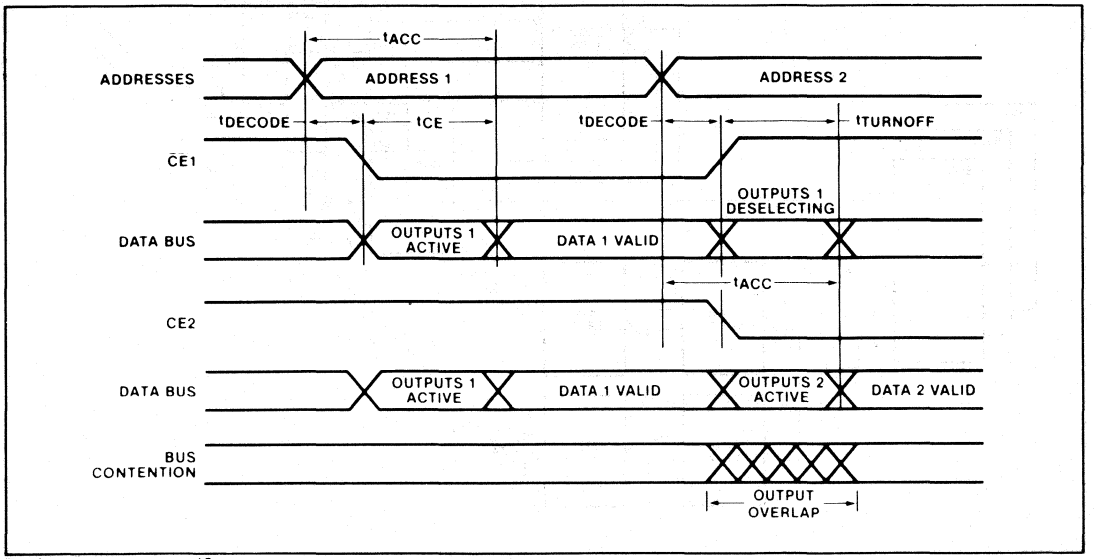

For footnotes see page 13.

Figure 3. Single-Line Control and Bus Contention

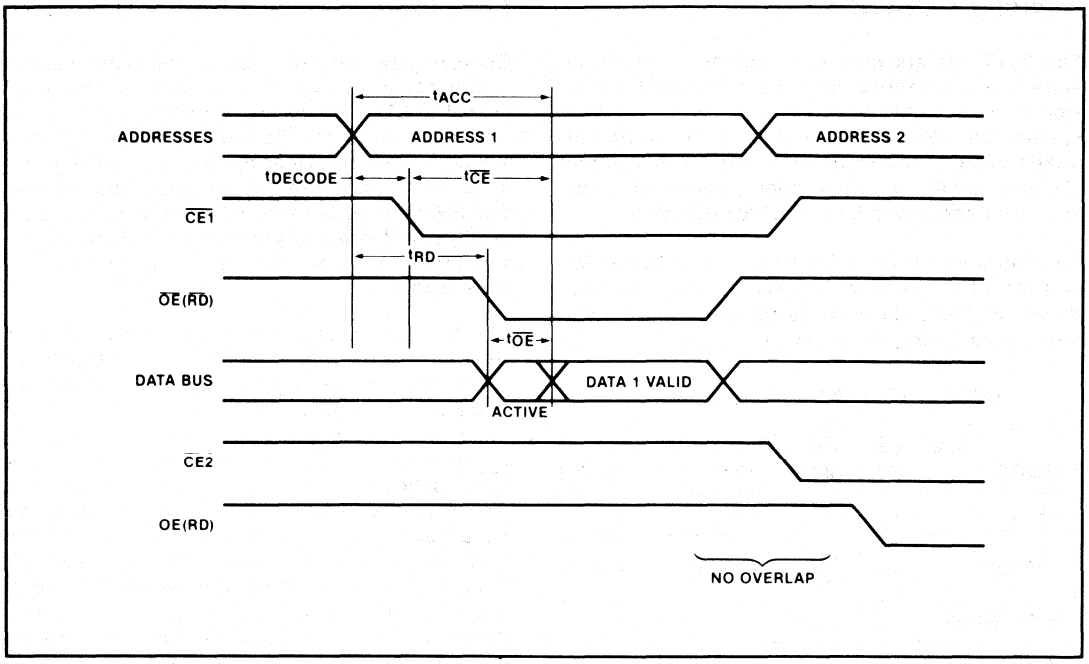

Figure 4. Two-Line Control Architecture

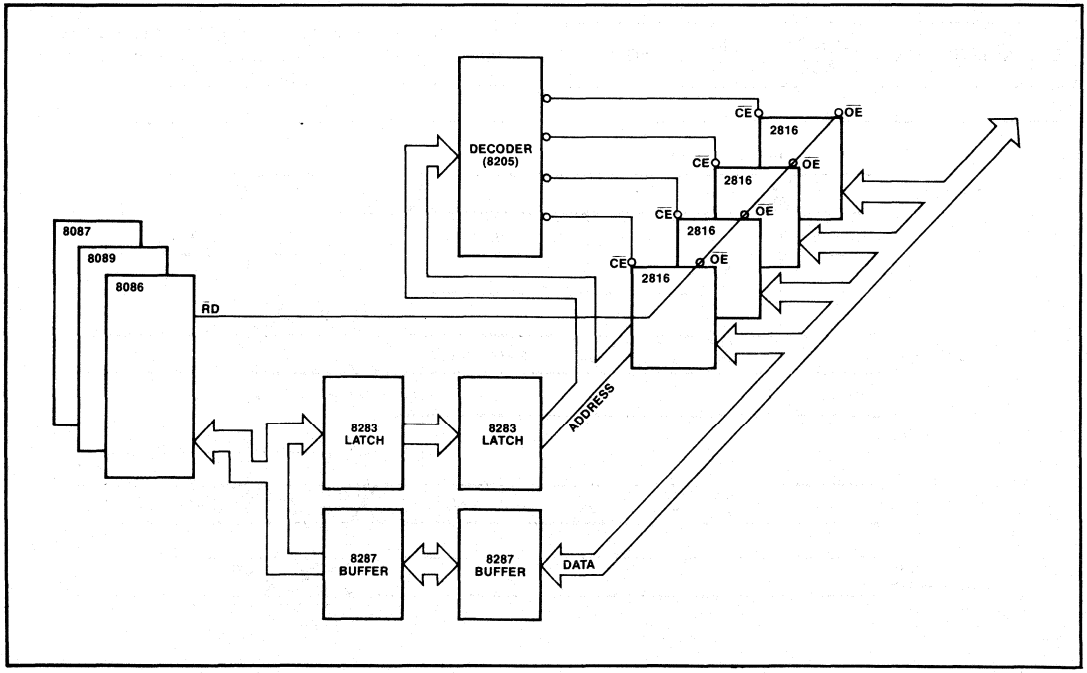

Figure 5. iAPX 86/2816 Read Architecture

For footnotes see page 13.

Write Mode

The 2816 is erased and reprogrammed electrically rather than optically, as opposed to EPROMs which require UV light. The device offers dramatic flexibility because both byte (single location) and chip erase are possible.

A close examination of the broad application spectrum for the E^2 device reveals an inherent need for single location erase capability. Program store applications can be classified in several ways. Figure 6 lists various storage modes and the required erase function. In greater than 80% of all cases, a byte erase feature is necessary.

APPLICATION TYPE	IDEAL ERASE MODE
• Strict Program Store	CHIP
• Relocatable Program Structures	BYTE
• Program Store Extension	BYTE
• Program Execution Constants	BYTE
• Program Dependent Data Store	BYTE
• Data Store Applications	BYTE

Figure 6. Microprocessor Storage Types

To write a particular location, that byte must be erased prior to a data write. Erasing is accomplished by applying logic 1 (TTL-high) inputs to the data input pins, lowering $\overline{CE}$, and applying a 21-volt programming signal to V_{PP}. The $\overline{OE}$ pin must be held at V_{IH} during byte erase and write operations. The programming pulse width must be a minimum of 9 ms, and a maximum of 15. The rising edge of V_{PP} must conform to the RC time constant specified above. Once the location has been erased, the same operation is repeated for a data write. The input pins in this case reflect the byte that is to be stored.

A characteristic of all E^2PROMs is that the total number of erase/write cycles is not unlimited. The 2816 has been designed and manufactured to meet applications requiring up to 1×10^4 erase/write cycles per byte. The erase/write cycling characteristic is completely byte independent. Adjacent bytes are not affected during erase/write cycling.

Because the device is designed to be written in system, all data sheet specifications (including write and erase operations) hold over the full operating temperature range (0-70°C).

For footnotes see page 13.

CONTROLLERS

Controller I Description

The Controller I interface provides the lowest cost, smallest P.C. board space implementation, though it is unable to offer the maximum CPU throughput capability since wait states are inserted into the memory cycle during the 10 ms write time. Figure 7 shows the block diagram for this implementation. A timer device is provided to time 10 ms, which connects directly to the CPU READY line. When activated, the timer engages the V_{PP} switch, locks the CPU address, data, and control bus, and writes the 2816. After completion of the write cycle, the CPU is relinquished to do other tasks. Such a control application is appropriate when the processor can be dedicated to the write, such as in program store.

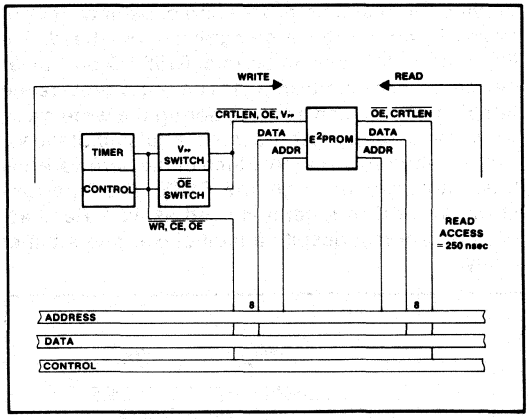

Figure 7. Controller I

Controller II Description

To provide a higher CPU throughput capability, the interface shown in Figure 8 was designed. In this case, all latching and timing signals are generated by discrete devices. The CPU simply sends a write operation to the interface as it would to a RAM device. After the CPU has engaged the write sequence, it is free to perform other tasks not related to 2816 control. At the completion of the write cycle, the interface interrupts the CPU which then vectors to an interrupt service routine. Controller II offers real-time CPU performance with a high degree of hardware overhead.

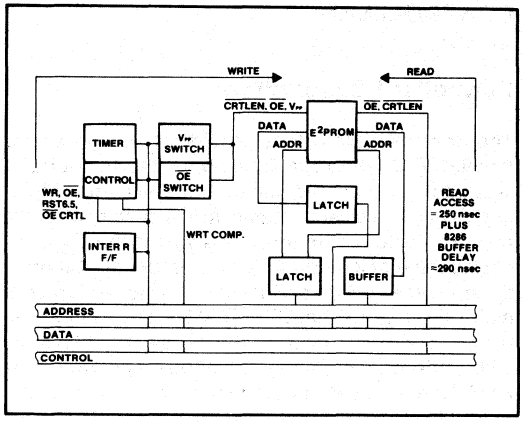

Figure 8. Controller II

Controller III Description

The Controller III implementation was designed to provide the real-time processing capability of Controller II, without the large hardware overhead. See Figure 9. In this design an Intel 8155 I/O port timer device is used to advantage. The ports provide the latching of data and address during the write cycle, while the timer performs accurate pulsing of the V_{PP} for the required duration. Much of the hardware has been reduced through the 8155. The interrupt structure of Controller II is used as well. Read access is very fast despite a multiplexer and a buffer delay.

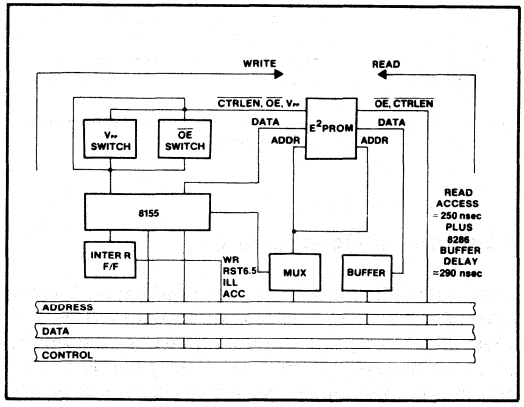

Figure 9. Controller III

Controller IV Description

Data store applications were in mind for the Controller IV design shown in Figure 10. In this case, read access was not a concern, though write erase access and hardware overhead were exceptionally important. This controller takes the 2816 completely off-line for both read and write operations. The write cycle is accomplished in the same way as in Controller III. Reading, however, is accomplished through several I/O operations.

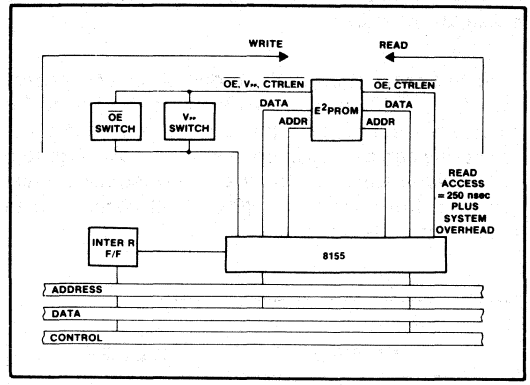

Figure 10. Controller IV

Chip Erase Mode

Should one wish to erase the entire 2816 array at once, the device offers a chip erase function. When the chip erase function is performed all 2K bytes are returned to a logic 1 (FF) state.

The 2816's chip erase function is engaged when the output enable ($\overline{OE}$) pin is raised above 9 volts. When $\overline{OE}$ is greater than 9 volts and $\overline{CE}$ and V_{PP} are in the normal write mode, the entire array is erased. This chip erase function takes approximately 10 ms. The data input pins must be held to a TTL high level during this time. Figure 11 is a recommended $\overline{OE}$ control switch.

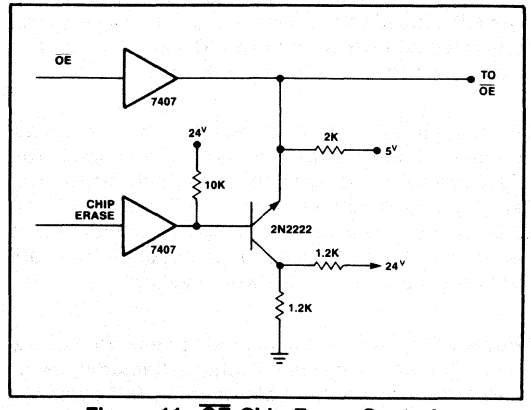

Figure 11. $\overline{OE}$ Chip Erase Control

For footnotes see page 13.

V_{PP} Pulse

The shape of the V_{PP} pulse is important in ensuring long term reliability and operating characteristics. V_{PP} must rise to 21V through an RC waveform (exponential). The T_{PRC} specification has been designed to accommodate changes of RC due to temperature variations.

Figure 12a shows a recommended V_{PP} switch design, useful where programming will occur over the specified temperature and operating voltage conditions. Figure 12b shows the waveform.

Voltage Generation

The Intel 2816 is a new generation of non-volatile memory in which writing and erasing can be accomplished on board by providing a 21 volt pulse. In order to generate the V_{PP} pulse, a power supply with output voltage of +24V is needed. In a system environment where this voltage is not available, a switching regulator can be used to convert +5V to +24V. Figure 12c shows the circuit diagram for such a voltage converter. In systems where 24 volts is not available, this circuit proves to be a cost effective alternative.

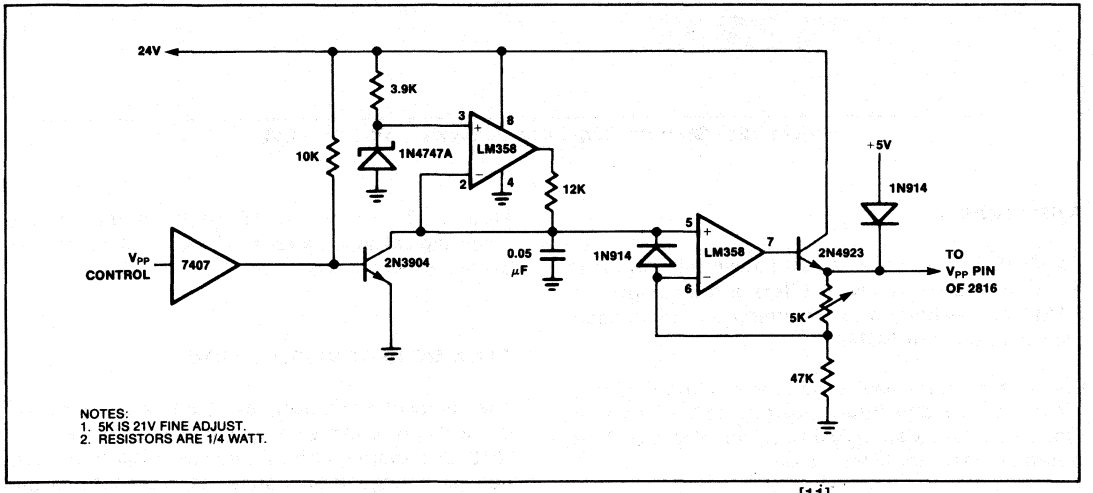

Figure 12a. Operational Amplifier V_{PP} Switch Design[11]

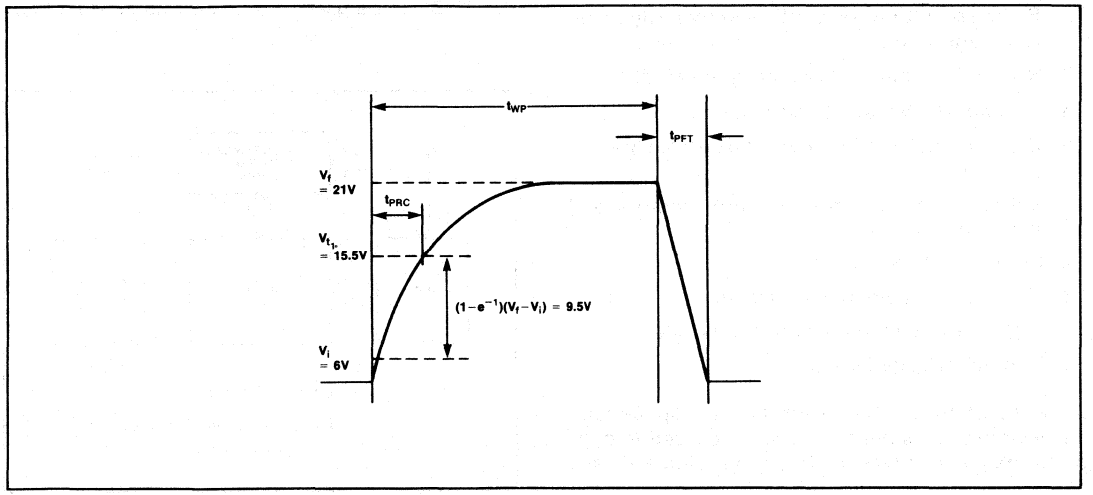

Figure 12b. V_{PP} Waveform

For footnotes see page 13.

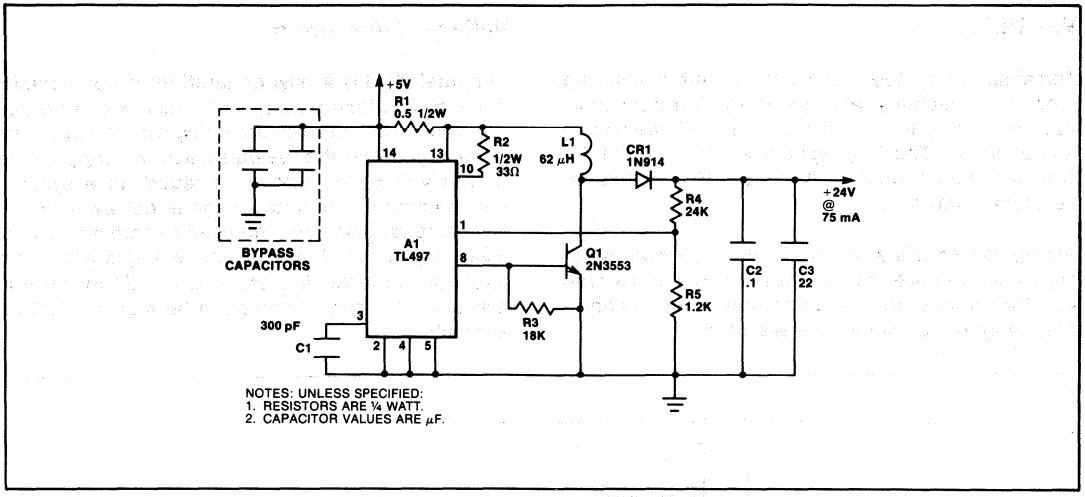

Figure 12c. Step-up Regulator Converts +5V Into +24V

Applications

The 2816 E^2PROM is a new and powerful addition to the non-volatile family. It offers a high degree of RAM-like flexibility while retaining the non-volatile characteristics of ROM.

Because of these device parameters, the device is ideal for new and future designs as well as a replacement for existing ROM devices. Some of these potential uses are listed below:

1. Calibration constants storage (continuous calibration).
2. Software alterable control stores (dynamic reconfiguration).
3. Remote communications programming.
4. PC and NC Industrial Applications.
5. CRT terminal configuration and custom graphic and font sets.
6. Military replacements for core memory and fuse-link PROMs.
7. Point of sale terminals.
8. Remote alterable look-up tables.
9. Printer and communications controllers.
10. Remote data gathering.

Because of these device attributes, applications never before possible can now be realized in high performance, consistent microprocessing systems.

For footnotes see page 13.

Figures 13, 14, 15, and 16 are block diagrams of some typical applications. These applications are explained as follows:

DYNAMIC RECONFIGURATION

The ability of a computer system to alter its operating software while running is now possible with the 2816. The system can monitor external factors, as well as change loop constants, subroutines and other software features in real-time. Figure 13 illustrates this optimal performance. In memory systems, the 2816 can be used to map around hard memory

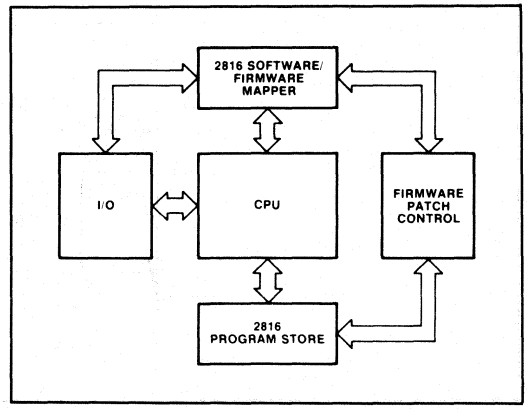

Figure 13. Dynamic Reconfiguration

failures in real-time, allowing self-healing memory systems. Such a self-correcting mechanism extends the operating time and reduces service costs to the end user.

CONTINUOUS SELF-CALIBRATION

A high cost of machine service and downtime is due to instrument calibration and readjustments. Use of the 2816 and microprocessor based instruments to contain calibration constants allows features never before possible. See Figure 14. The instrument can now continuously calibrate itself, without expensive downtime in service interaction. The 2816 allows this flexibility and reduction of service costs.

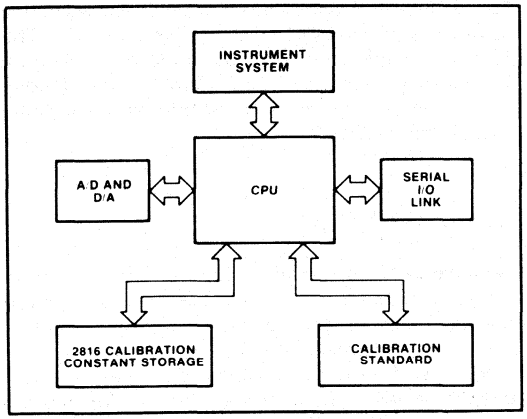

Figure 14. Continuous Self-Calibration

CRT TERMINAL

Custom fonts, graphics characters, and individual configurations can all benefit from the features of the 2816. A CRT terminal, shown in Figure 15, can now be enhanced by using the E^2 as a replacement for jumpers and dip switches. It can also be used as a programmable character generator, and in graphics configuration.

POINT OF SALE TERMINAL

Using the 2816 to contain non-volatile price and product descriptions, as shown in Figure 16, is an ideal application in point of sale terminals. With the ability of the 2816 to be altered in-system comes the capability to remotely (over telephone lines) configure the look up table from a central data base computer. The non-volatility of the 2816 is used to advantage as the data store remains intact after power is removed from the system.

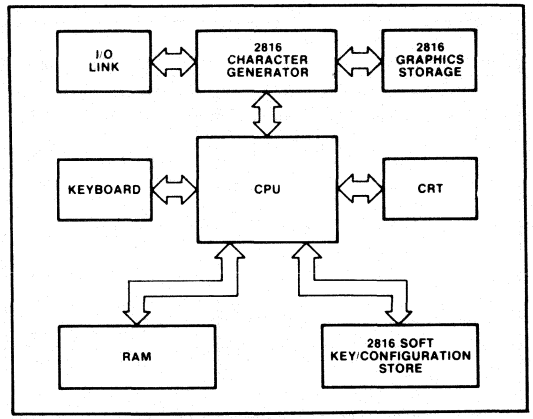

Figure 15. CRT Terminal

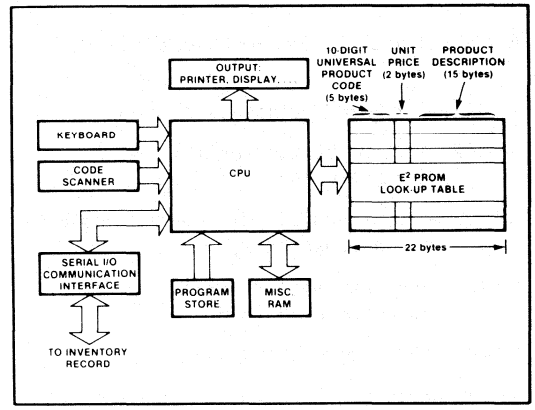

Figure 16. POS Terminal

Pin Compatibility

The 2816 pinout has been designed for compatibility with present and future memory products. The E^2PROM is a member of Intel's JEDEC standard Byte-Wide memory family which allows density upgrades, functional interchange, and extended product life. Figure 17 shows this JEDEC 28 pin site pinout approach.

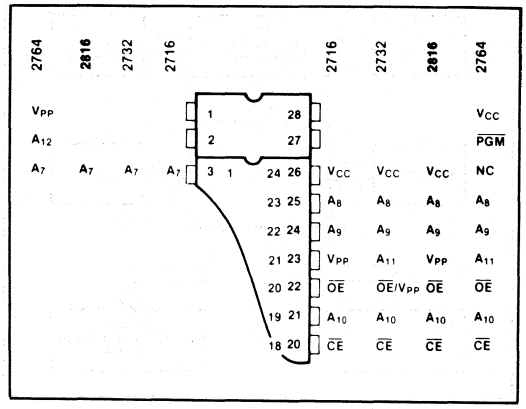

Figure 17. JEDEC 28 Pin Site Byte-Wide Philosophy

Available Literature

To give the system designer an opportunity to more thoroughly understand the device attributes and uses, a library of E^2 information is available in the E^2 Applications Handbook Volume II. It includes these application notes:

AP100—Reliability Aspects of a Floating Gate E^2PROM

AP-101—The 2816 Electrical Description

AP-102—2816 Microprocessor Interface Considerations

AP-103—Programming E^2PROM with a Single 5-Volt Power Supply

AP-107—Hardware and Software Download Techniques with 2816

AP135—8298 Integrated E^2 Controller

AP136—A Multibus-Compatible 2816 E^2PROM Memory Board

For footnotes see page 13.

AP137—8298 Functional Specification and Firmware Description

AP138—A 2716 to 2816 Programming Socket Adapter

To obtain this literature contact your local Field Sales office. In addition, your Field Applications Engineer can discuss with you the controller interfaces for different MPU system configurations.

All of the above literature will be available at the end of Q2 1981. The E^2PROM Applications Handbook is available now.

Standby Mode

The 2816 has a standby mode which reduces active power dissipation by 55% from 110 mA to 50 mA. The 2816 is placed in the standby mode by applying a TTL high signal to the CE input. When in the standby mode, the outputs are in a high impedance state, independent of the OE input.

Output OR-TIEING

Because 2816s are usually used in larger memory arrays, Intel has provided a 2-line control function that accommodates this use of multiple memory connections. The 2-line control function allows low power dissipation (by deselecting unused devices), and the removal of bus contention from the system environment.

To most effectively use these two control lines, it is recommended that $\overline{CE}$ (pin 18) be decoded from addresses as the primary device selection function. $\overline{OE}$ (pin 20) should be made a common connection to all devices in system, and connected to the $\overline{RD}$ line from the system control bus. This assures that all deselected memory devices are in their low power standby mode and that the output pins are only active when data is desired from a particular memory device.

ABSOLUTE MAXIMUM RATINGS*

Temperature Under Bias ..... −10°C to +80°C
Storage Temperature ..... −65°C to +100°C
All Input or Output Voltages with Respect to Ground ..... +6V to −0.3V
V_{PP} Supply Voltage with Respect to Ground During Write/Erase ..... +22.5V to −0.1V
Maximum Duration of V_{PP} Supply at 22V During E/W Inhibit ..... 24 Hrs.
Maximum Duration of V_{PP} Supply at 22V During Write/Erase ..... 70 ms[8]

NOTICE: Stresses above those listed under "Absolute Maximum Ratings" may cause permanent damage to the device. This is a stress rating only and functional operation of the device at these or any other conditions above those indicated in the operational sections of this specification is not implied. Exposure to absolute maximum rating conditions for extended periods may affect device reliability.

D.C. AND A.C. OPERATING CONDITIONS DURING READ AND WRITE

	2816	2816-3	2816-4
Temperature Range	0°C-70°C	0°C-70°C	0°C-70°C
V_{CC} Power Supply[9]	5V ± 5%	5V ± 5%	5V ± 5%

D.C. CHARACTERISTICS

READ

Symbol	Parameter	Limits			Units	Test Conditions
		Min.	Typ.[1]	Max.		
I_{LI}	Input Leakage Current			10	μA	V_{IN} = 5.25V
I_{LO}	Output Leakage Current			10	μA	V_{OUT} = 5.25V
I_{CC2}	V_{CC} Current (Active)		50	110	mA	$\overline{OE}$ = $\overline{CE}$ = V_{IL}
I_{CC1}	V_{CC} Current (Standby)		25	50	mA	$\overline{CE}$ = V_{IH}
$I_{PP(R)}$	V_{PP} Current (Read)			5	mA	$\overline{CE}$ = V_{IL}, V_{PP} = 4 to 6
V_{IL}(D.C.)	Input Low Voltage (D.C.)	−0.1		.8	V	
V_{IH}	Input High Voltage	2.0		V_{CC}+1	V	
V_{OL}	Output Low Voltage			.45	V	I_{OL} = 2.1 mA
V_{OH}	Output High Voltage	2.4			V	I_{OH} = −400 μA
V_{PP}	Read Voltage	4		6	V	
V_{IL}(A.C.)	Input Low Voltage (A.C.)	−0.4			V	Time = 10 ns

WRITE

Symbol	Parameter	Limits			Units	Test Conditions
		Min.	Typ.[1]	Max.		
V_{PP}	Write/Erase Voltage	20	21	22	V	
$I_{PP(W)}$	V_{PP} Current (Byte Erase/Write)		9	15	mA	$\overline{CE}$ = V_{IL}
V_{OE}	$\overline{OE}$ Voltage (Chip Erase)	9		15	V	I_{OE} = 10 μA
$I_{PP(I)}$	V_{PP} Current Inhibit			5	mA	V_{PP} = 22, $\overline{CE}$ = VIH
$I_{PP(C)}$	V_{PP} Current (Chip Erase)		3	5	mA	

For footnotes see page 13.

CAPACITANCE[1] T_A = 25°C, f = 1 MHz

Symbol	Parameter	Typ.	Max.	Units	Test Conditions
C_{IN}	Input Capacitance	5	10	pF	V_{IN} = 0V
C_{OUT}	Output Capacitance		10	pF	V_{OUT} = 0V
$C_{V_{CC}}$	V_{CC} Capacitance		500	pF	$\overline{OE}$ = $\overline{CE}$ = V_{IH}
$C_{V_{PP}}$	V_{PP} Capacitance		50	pF	$\overline{OE}$ = $\overline{CE}$ = V_{IH}

A.C. TEST CONDITIONS

Output Load: 1TTL gate and C_L = 100 pF
Input Pulse Levels: 0.45 to 2.4V
Timing Measurement Reference Level: Input 1V and 2V
Output .8V and 2V

A.C. CHARACTERISTICS

READ

Symbol	Parameter	2816 Limits			2816-3 Limits			2816-4 Limits			Units	Test Conditions
		Min.	Typ.[1]	Max.	Min.	Typ.[1]	Max.	Min.	Typ.[1]	Max.		
t_{ACC}	Address to Output Delay		200	250		300	350		400	450	ns	$\overline{CE}$ = $\overline{OE}$ = V_{IL}
$t_{\overline{CE}}$	$\overline{CE}$ to Output Delay		200	250		300	350		400	450	ns	$\overline{OE}$ = V_{IL}
$t_{\overline{OE}}$	Output Enable to Output Delay	10		100	10		120	10		150	ns	$\overline{CE}$ = V_{IL}
t_{DF}	Output Enable High to Output Float	0		80	0		100	0		130	ns	$\overline{CE}$ = V_{IL}
t_{OH}	Output Hold from Addresses, $\overline{CE}$ or $\overline{OE}$ Whichever Occurred First	0			0			0			ns	$\overline{CE}$ = $\overline{OE}$ = V_{IL}

WRITE

Symbol	Parameter	Limits			Units	Test Conditions
		Min.	Typ.[1]	Max.		
t_{AS}	Add to V_{PP} Set-Up Time	150			ns	
t_{CS}	CE to V_{PP} Set-Up Time	150			ns	
t_{DS}[10]	Data to V_{PP} Set-Up Time	0			ns	
t_{DH}[10]	Data Hold Time	50			ns	V_{PP} = 6V
t_{WP}[8]	Write Pulse Width	9	10	70	ms	
t_{WR}	Write Recovery Time	50			ns	V_{PP} = 6V
t_{OS}	Chip Erase Set-Up Time	0			ns	V_{PP} = 6V, $V_{\overline{OE}}$ = 9V
t_{OH}	Chip Erase Hold Time	0			ns	V_{PP} = 6V, $V_{\overline{OE}}$ = 9V
t_{PRC}	V_{PP} RC Time Constant	450	600	750	μs	
t_{PFT}[7]	V_{PP} Fall Time			100	μs	V_{PP} = 6V
t_{BOS}	Byte Erase/Write Set-Up Time	0			ns	V_{PP} = 6V
t_{BOH}	Byte Erase/Write Hold Time	0			ns	V_{PP} = 6V

For footnotes see page 13.

WAVEFORMS

READ

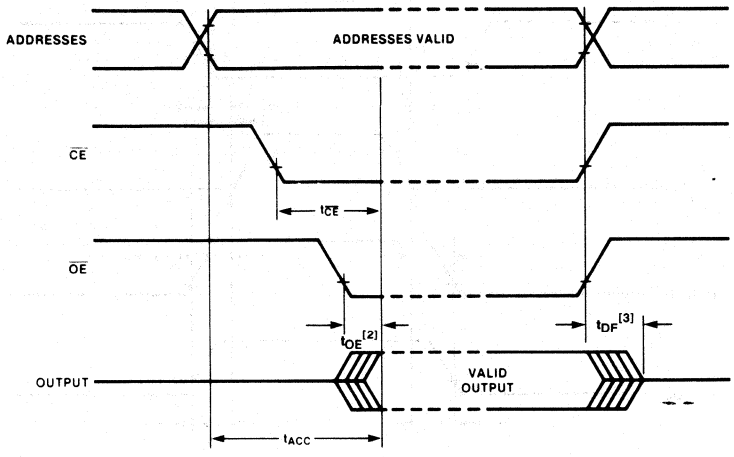

BYTE ERASE OR WRITE[5]

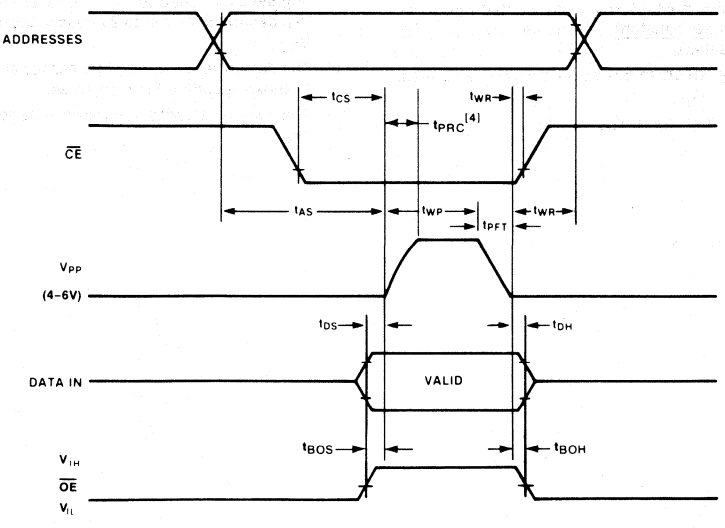

For footnotes see page 13.

WAVEFORMS (Continued)

CHIP ERASE[6]

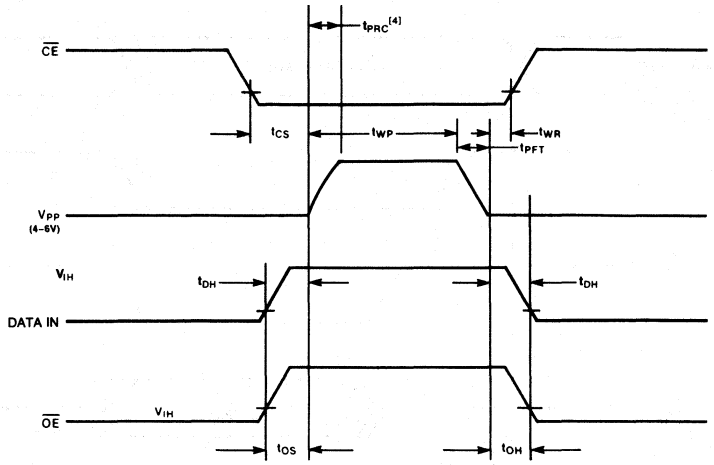

NOTES:

1. This parameter is only sampled and not 100% tested.
2. $\overline{OE}$ may be delayed up to 230 ns after falling edge of $\overline{CE}$ without impact on t_{ACC} for 2816.
3. t_{DF} is specified from $\overline{OE}$ or $\overline{CE}$ whichever occurs first.
4. The rising edge of V_{PP} must follow an exponential waveform. That waveform's time constant is specified as t_{PRC}. See Intel's AP-102 for details.
5. Prior to a data write, an erase operation must be performed. For erase, data in = V_{IH}.
6. In the chip erase mode $D_{IN} = V_{IH}$.
7. To allow immediate read verify capability, V_{PP} can be driven low in less than 50 ns. See AP-101 for more information.
8. Adherence to TWP specification is important to device reliability.
9. To prevent spurious device erasure or write, V_{CC} must be applied simultaneously or before 21 volt application of V_{PP}. V_{PP} cannot be driven to 21 volts without previously applying V_{CC}.
10. The data in set up and hold times for chip erase are identical to those specified for byte erase.
11. This switch includes automatic voltage shutdown on power fail.

PRELIMINARY

2817

16K (2K X 8) ELECTRICALLY ERASABLE PROM

- **Self Timed Byte Write with Automatic Erase**
- **Direct Microprocessor Interface Capability**
- **Static 21 Volt V_{PP}**
- **Reduces Support Component Requirement by 70% to 90% Over 2816 and 2815**
- **Byte Write Time: 75 mS†**
- **Very Fast Read Access Time:**
  2817 250 nS
  2817-3 350 nS
  2817-4 450 nS
- **Reliable Intel FLOTOX E^2PROM Technology**

The Intel 2817 is a 16,384 bit Electrically Erasable Programmable Read Only Memory. Like the Intel 2816 and 2815, it has completely Non-Volatile Data Storage. However, in addition, it offers a high degree of integrated functionality which enables in-circuit byte writing to be performed with minimal hardware and software overhead. The Intel 2817 is a product of Intel's advanced E^2PROM technology and uses the powerful HMOS*-E process for reliable, *non-volatile,* data storage.

The Intel 2817 eliminates all the interfacing hardware logic and firmware required to perform data writes. The device has complete self-timing which leaves the processor free to perform other tasks until the 2817 signals 'Ready.' With a transparent erase before write, the user benefits by saving an erase command contributing to efficient usage of system processing time.

The Intel 2817's very fast read access time makes it compatible with high performance microprocessor applications. It uses Intel's proven 2-line control architecture which eliminates bus contention in a system environment. Combining these features with the 2817's 'Ready' signal makes the device an extremely powerful, yet simple to use, E^2 memory—available to the designer today.

The density, and level of integrated control, makes the Intel 2817 suitable for users requiring low hardware overhead, high system performance, minimal board space and design ease. Designing with, and using the 2817, is extremely cost effective as 70% of the required voltage and interfacing hardware required for other E^2PROM devices has been eliminated. See Figures 1, 2, and 3 for the Intel 2817's block diagram, pinout, and simple interface requirements.

*HMOS-E is a patented process of Intel Corporation.

†Faster write times will be available.

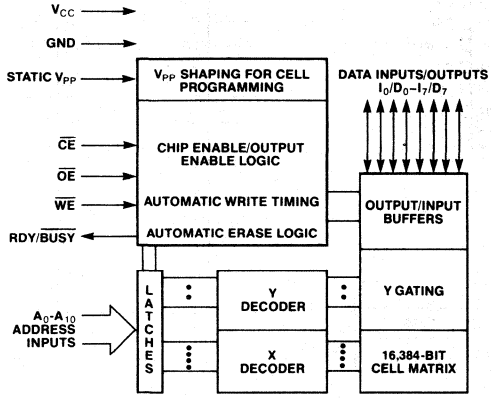

Figure 1. 2817 Functional Block Diagram

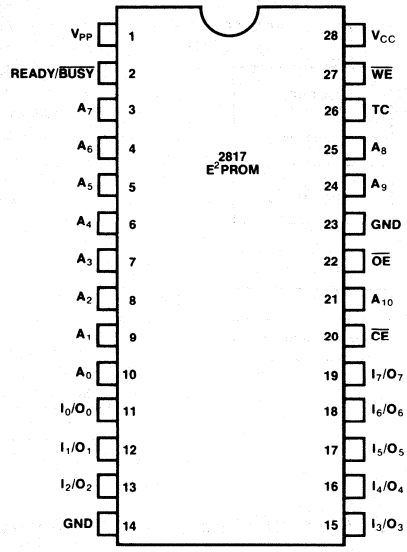

Figure 2. 2817 Pin Configuration

Intel Corporation Assumes No Responsibilty for the Use of Any Circuitry Other Than Circuitry Embodied in an Intel Product. No Other Circuit Patent Licenses are Implied.
© INTEL CORPORATION, 1980

ORDER NO. 210255-001
OCTOBER 1981

3628A
8K (1K x 8) BIPOLAR PROM

3628A-1	50 ns Max.
3628A-3	70 ns Max.
3628A-4	90 ns Max.

- **Fast Access Time: 50 ns for 3628A-1**
- **Low Power Dissipation: 0.08 mW/Bit Typically**
- **Four Chip Select Inputs for Easy Memory Expansion**
- **±10% Power Supply Tolerance**
- **Three-State Outputs**
- **Hermetic 24-Pin DIP**
- **Polycrystalline Silicon Fuses for Higher Fuse Reliability/Higher Programmability**

The Intel 3628A is a fully decoded 8192-bit PROM organized as 1024 words by 8 bits. The worst case access time of 35 ns is specified over the 0°C to 75°C temperature range and 10% V_{CC} power supply tolerances. There are four chip selects provided to facilitate expansion into larger PROM arrays. The PROMs use the Schottky clamped TTL technology with polycrystalline silicon fuses. All outputs are initially high, and logic low levels can be electrically programmed in selected bit locations.

The 3628A is a super-fast, high-density PROM. This 8192-bit PROM uses the most advanced technology available. As a result the 3628A combines higher performance and lower power in a smaller die than the 3628. The 3628A is packaged in a hermetic 24-pin dual in-line package with the exact pin configuration as the 3628.

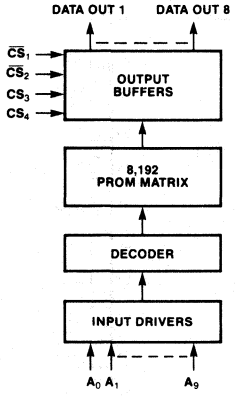

Figure 1. Block Diagram

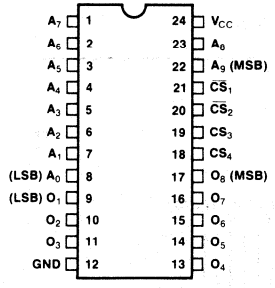

PIN NAMES

A_0–A_9	ADDRESS INPUTS
$\overline{CS}_1$, $\overline{CS}_2$, CS_3, CS_4	CHIP SELECT INPUTS(1)
O_1–O_8	DATA OUTPUTS

(1) To select the PROM $\overline{CS}_1 = \overline{CS}_2 = V_{IL}$ and $CS_3 = CS_4 = V_{IH}$

Figure 2. Pin Configuration

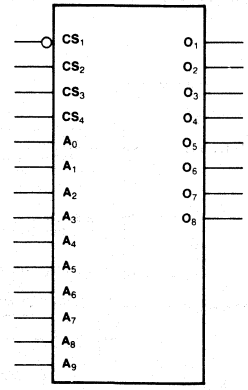

Figure 3. Logic Symbol

Intel Corporation Assumes No Responsibilty for the Use of Any Circuitry Other Than Circuitry Embodied in an Intel Product. No Other Circuit Patent Licenses are Implied.
©INTEL CORPORATION, 1981.

SEPTEMBER 1981
AFN 01922A

PROGRAMMING

The programming specifications are described in the PROM programming section of the Data Catalog.

ABSOLUTE MAXIMUM RATINGS*

Temperature Under Bias ..... −65°C to +125°C
Storage Temperature ..... −65°C to +160°C
Output or Supply Voltages ..... −0.5V to 7 Volts
All Input Voltages ..... −1.5V to 5.5V
Output Currents ..... 100 mA

**NOTICE: Stresses above those listed under "Absolute Maximum Ratings" may cause permanent damage to the device. This is a stress rating only and functional operation of the device at these or any other conditions above those indicated in the operational sections of this specification is not implied. Exposure to absolute maximum rating conditions for extended periods may affect device reliability.*

D.C. CHARACTERISTICS (All Limits Apply for V_{CC} = +5.0V ± 10%, T_A = 0°C to +75°C)

Symbol	Parameter	Limits				Test Conditions
		Min.	Typ.[1]	Max.	Unit	
I_{FA}	Address Input Load Current		−0.05	−0.25	mA	V_{CC} = 5.5V, V_A = 0.45V
I_{FS}	Chip Select Input Load Current		−0.05	−0.25	mA	V_{CC} = 5.5V, V_S = 0.45V
I_{RA}	Address Input Leakage Current			40	μA	V_{CC} = 5.5V, V_A = 5.5V
I_{RS}	Chip Select Input Leakage Current			40	μA	V_{CC} = 5.5V, V_S = 5.5V
$\|I_O\|$	Output Leakage for High Impedance State			40	μA	V_O = 5.5V or 0.45V, V_{CC} = 5.5V, CS_1 = CS_2 = 2.4V
I_{SC}[2]	Output Short Circuit Current	−20	−40	−100	mA	V_O = 0V
V_{CA}	Address Input Clamp Voltage		−0.9	−1.5	V	V_{CC} = 4.5V, I_A = −10 mA
V_{CS}	Chip Select Input Clamp Voltage		−0.9	−1.5	V	V_{CC} = 4.5V, I_S = −10 mA
V_{OH}	Output High Voltage	2.4	3.2		V	I_{OH} = −2.4 mA, V_{CC} = 4.5V
V_{OL}	Output Low Voltage		0.3	0.45	V	V_{CC} = 4.5V, I_{OL} = 10 mA
I_{CC}	Power Supply Current		120	170	mA	V_{CC} = 5.5V
V_{IL}	Input "Low" Voltage			0.85	V	
V_{IH}	Input "High" Voltage	2.0			V	

NOTES:
1. Typical values are for T_A = 25°C and nominal supply voltages.
2. Unmeasured outputs are open during this test.

CAPACITANCE[1] (T_A = 25°C, f = 1 MHz)

Symbol	Parameter	Limits		Unit	Test Conditions
		Typ.	Max.		
C_{INA}	Address Input Capacitance	4	10	pF	V_{CC} = 5V V_{IN} = 2.5V
C_{INS}	Chip-Select Input Capacitance	4	10	pF	V_{CC} = 5V V_{IN} = 2.5V
C_{OUT}	Output Capacitance	6	12	pF	V_{CC} = 5V V_{OUT} = 2.5V

NOTES:
1. This parameter is only periodically sampled and is not 100% tested.

A.C. CHARACTERISTICS (V_{CC} = +5V ± 10%, T_A = 0°C to +75°C)

Symbol	Parameter	Max. Limits			Unit	Test Conditions
		3628A-1	3628A-3	3628A-4		
t_A	Address to Output Delay	50	70	90	ns	$CS_1 = CS_2 = V_{IL}$ and $CS_3 = CS_4 = V_{IH}$ to select the PROM.
t_{EN}	Output Enable Time	30	30	30	ns	
t_{DIS}	Output Disable Time	30	30	30	ns	

SWITCHING CHARACTERISTICS

Conditions of Test:

Input pulse amplitudes: 2.5V
Input pulse rise and fall times of 5 nanoseconds between 1 volt and 2 volts
Speed measurements are made at 1.5 volt levels
Output loading is 10 mA and 30 pF
Frequency of test: 2.5 MHz

10mA TEST LOAD

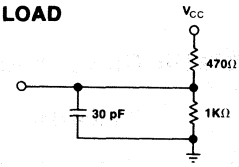

WAVEFORMS

ADDRESS TO OUTPUT DELAY

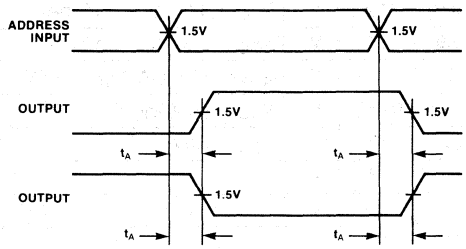

CHIP SELECT TO OUTPUT DELAY

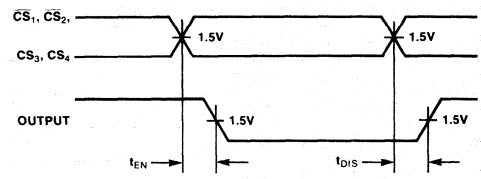

3632
32K (4K x 8) BIPOLAR PROM

3632-1	40 ns Max.
3632	50 ns Max.

- 30 ns Typical Access
- Low Power Dissipation: 0.02 mW/Bit Typically
- Two Chip Select Inputs for Easy Memory Expansion
- ±10% Power Supply Tolerance
- Three-State Outputs
- Hermetic 24-Pin DIP
- Polycrystalline Silicon Fuses for Higher Fuse Reliability/Higher Programmability

The Intel® 3632 is a high performance 32,768-bit PROM organized as 4096 words by 8 bits. The worst case access time of 40 ns is specified over the 0°C to 75°C temperature range and 10% V_{CC} power supply tolerances. There are three chip selects provided to facilitate expansion into larger PROM arrays. The PROMs use the Schottky clamped TTL technology with polycrystalline silicon fuses. All outputs are initially high and logic low levels can be electrically programmed in selected bit locations.

The 3632 allows present 4K, 8K and 16K PROM users to significantly increase density without sacrificing performance. The 3632 is packaged in a hermetic 24 pin dual in-line package. This 32,768-bit PROM uses the most advanced technology available. As a result, the 3632 combines high performance, high density and lower power per bit than previous Bipolar PROM designs.

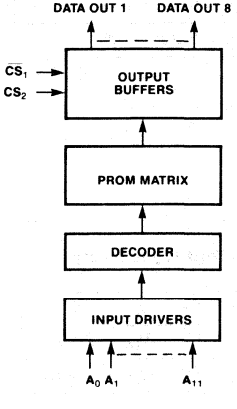

Figure 1. Block Diagram

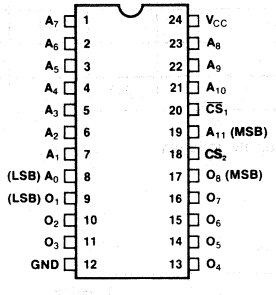

PIN NAMES

A_0-A_{11}	ADDRESS INPUTS
$\overline{CS}_1$, CS_2	CHIP SELECT INPUTS(1)
O_1-O_8	DATA OUTPUTS

(1) To select the PROM $\overline{CS}_1$ V_{IL} and $CS_2 = V_{IH}$

Figure 2. Pin Configuration

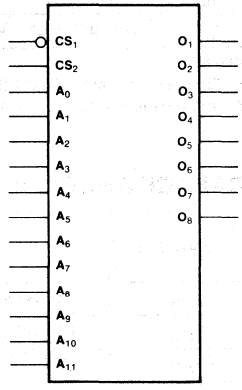

Figure 3. Logic Symbol

Intel Corporation Assumes No Responsibilty for the Use of Any Circuitry Other Than Circuitry Embodied in an Intel Product. No Other Circuit Patent Licenses are Implied.
© INTEL CORPORATION, 1981.

APRIL 1981
AFN-01918A

PROGRAMMING

The programming specifications are described in the PROM programming section of the Data Catalog.

ABSOLUTE MAXIMUM RATINGS*

Temperature Under Bias ..... −65°C to +125°C
Storage Temperature ..... −65°C to +160°C
Output or Supply Voltages ..... −0.5V to 7 Volts
All Input Voltages ..... −1.5V to 5.5V
Output Currents ..... 100 mA

**NOTICE: Stresses above those listed under "Absolute Maximum Ratings" may cause permanent damage to the device. This is a stress rating only and functional operation of the device at these or any other conditions above those indicated in the operational sections of this specification is not implied.*

D.C. CHARACTERISTICS (All Limits Apply for V_{CC} = +5.0V ± 10%, T_A = 0°C to +75°C)

Symbol	Parameter	Limits			Unit	Test Conditions
		Min.	Typ.[1]	Max.		
I_{FA}	Address Input Load Current		−0.05	−0.25	mA	V_{CC} = 5.5V, V_A = 0.45V
I_{FS}	Chip Select Input Load Current		−0.05	−0.25	mA	V_{CC} = 5.5V, V_S = 0.45V
I_{RA}	Address Input Leakage Current			40	μA	V_{CC} = 5.5V, V_A = 5.5V
I_{RS}	Chip Select Input Leakage Current			40	μA	V_{CC} = 5.5V, V_S = 5.5V
$\|I_O\|$	Output Leakage for High Impedance State			40	μA	V_O = 5.5V or 0.45V, V_{CC} = 5.5V, CS_1 = 2.4V
I_{SC}[2]	Output Short Circuit Current	−15	−40	−100	mA	V_O = 0V
V_{CA}	Address Input Clamp Voltage		−0.9	−1.5	V	V_{CC} = 4.5V, I_A = −10 mA
V_{CS}	Chip Select Input Clamp Voltage		−0.9	−1.5	V	V_{CC} = 4.5V, I_S = −10 mA
V_{OH}	Output High Voltage	2.4	3.2		V	I_{OH} = −2.4 mA, V_{CC} = 4.5V
V_{OL}	Output Low Voltage		0.3	0.45	V	V_{CC} = 4.5V, I_{OL} = 10 mA
I_{CC}	Power Supply Current		150	185	mA	V_{CC} = 5.5V
V_{IL}	Input "Low" Voltage			0.85	V	V_{CC} = 5.0V ± 10%
V_{IH}	Input "High" Voltage	2.0			V	V_{CC} = 5.0V ± 10%

NOTES:
1. Typical values are for T_A = 25°C and nominal supply voltages.
2. Unmeasured outputs are open during this test.

CAPACITANCE[3] (T_A = 25°C, f = 1 MHz)

Symbol	Parameter	Limits		Unit	Test Conditions
		Typ.	Max.		
C_{INA}	Address Input Capacitance	4	10	pF	V_{CC} = 5V V_{IN} = 2.5V
C_{INS}	Chip-Select Input Capacitance	6	10	pF	V_{CC} = 5V V_{IN} = 2.5V
C_{OUT}	Output Capacitance	7	12	pF	V_{CC} = 5V V_{OUT} = 2.5V

NOTE:
3. This parameter is only periodically sampled and is not 100% tested.

A.C. CHARACTERISTICS (V_{CC} = +5V ± 10%, T_A = 0°C to +75°C)

Symbol	Parameter	Max. Limits		Unit	Test Conditions
		3632-1	3632		
t_A	Address to Output Delay	40	50	ns	$CS_1 = V_{IL}$ and $CS_2 = V_{IH}$ to select the PROM.
t_{EN}	Output Enable Time	30	35	ns	
t_{DIS}	Output Disable Time	30	35	ns	

SWITCHING CHARACTERISTICS

Conditions of Test:

Input pulse amplitudes: 2.5V
Input pulse rise and fall times of 5 nanoseconds between 1 volt and 2 volts
Speed measurements are made at 1.5 volt levels
Output loading is 10 mA and 30 pF
Frequency of test: 2.5 MHz

10 mA TEST LOAD

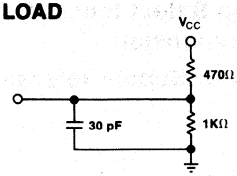

WAVEFORMS

ADDRESS TO OUTPUT DELAY

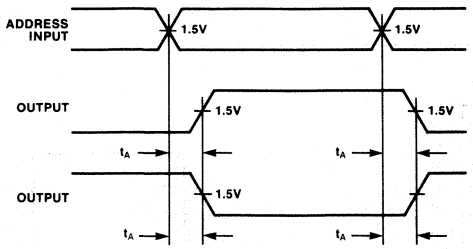

CHIP SELECT TO OUTPUT DELAY

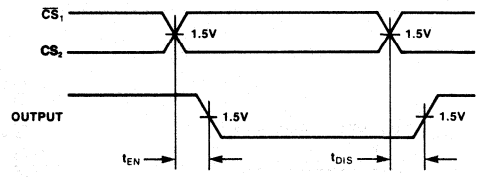

3636B
16K (2K x 8) BIPOLAR PROM

3636B-1	35 ns Max.
3636B-2	45 ns Max.
3636B	55 ns Max.

- **Fast Access Time: 25 ns Typically**
- **Low Power Dissipation: 0.05 mW/Bit Typically**
- **Three Chip Select Inputs for Easy Memory Expansion**
- **±10% Power Supply Tolerance**
- **Three-State Outputs**
- **Hermetic 24-Pin DIP**
- **Polycrystalline Silicon Fuses for Higher Fuse Reliability/Higher Programmability**

The Intel 3636B is a very fast, fully decoded 16,384 bit PROM organized as 2048 words by 8 bits. The worst case access time is 35ns over a temperature range of 0°C to 75°C with a 10% V_{CC} power supply tolerance. There are three chip selects provided to facilitate expansion into larger PROM arrays. The PROMs use the Schottky clamped TTL technology with polycrystalline silicon fuses. All outputs are initially high and logic low levels can be electrically programmed in selected bit locations.

The 3636B is designed for use in performance based systems. This 16,384 bit PROM uses the most advanced technology available. As a result, the 3636B combines higher performance and equivalent power in a smaller die than previous 16K Bipolar PROM designs. The 3636B is packaged in a hermetic 24 pin dual in-line package with the same pin configuration as the 3636.

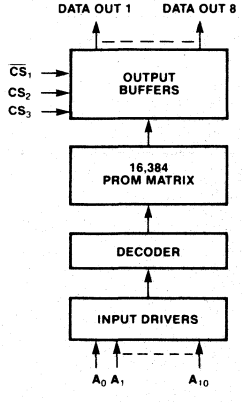

Figure 1. Block Diagram

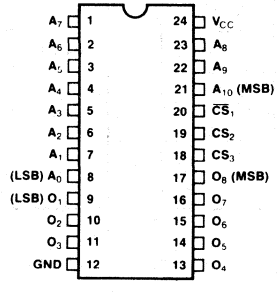

PIN NAMES

A_0–A_{10}	ADDRESS INPUTS
$\overline{CS}_1$, CS_2, CS_3	CHIP SELECT INPUTS(1)
O_1–O_8	DATA OUTPUTS

(1) To select the PROM $\overline{CS}_1 = V_{IL}$ and $CS_2 = CS_3 = V_{IH}$

Figure 2. Pin Configuration

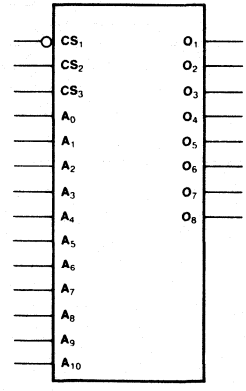

Figure 3. Logic Symbol

Intel Corporation Assumes No Responsibilty for the Use of Any Circuitry Other Than Circuitry Embodied in an Intel Product. No Other Circuit Patent Licenses are Implied
© INTEL CORPORATION, 1981.

PROGRAMMING

The programming specifications are described in the PROM programming section of the Data Catalog.

ABSOLUTE MAXIMUM RATINGS*

Temperature Under Bias ..... −65°C to +125°C
Storage Temperature ..... −65°C to +160°C
Output or Supply Voltages ..... −0.5V to 7 Volts
All Input Voltages ..... −1.5V to 5.5V
Output Currents ..... 100 mA

**NOTICE: Stresses above those listed under "Absolute Maximum Ratings" may cause permanent damage to the device. This is a stress rating only and functional operation of the device at these or any other conditions above those indicated in the operational sections of this specification is not implied.*

D.C. CHARACTERISTICS (All Limits Apply for V_{CC} = +5.0V ± 10%, T_A = 0°C to +75°C)

Symbol	Parameter	Limits			Unit	Test Conditions
		Min.	Typ.[1]	Max.		
I_{FA}	Address Input Load Current		−0.05	−0.25	mA	V_{CC} = 5.5V, V_A = 0.45V
I_{FS}	Chip Select Input Load Current		−0.05	−0.25	mA	V_{CC} = 5.5V, V_S = 0.45V
I_{RA}	Address Input Leakage Current			40	μA	V_{CC} = 5.5V, V_A = 5.5V
I_{RS}	Chip Select Input Leakage Current			40	μA	V_{CC} = 5.5V, V_S = 5.5V
$\|I_O\|$	Output Leakage for High Impedance State			40	μA	V_O = 5.5V or 0.45V, V_{CC} = 5.5V, CS_1 = 2.4V
I_{SC}[2]	Output Short Circuit Current	−20	−40	−100	mA	V_O = 0V
V_{CA}	Address Input Clamp Voltage		−0.9	−1.5	V	V_{CC} = 4.5V, I_A = −10 mA
V_{CS}	Chip Select Input Clamp Voltage		−0.9	−1.5	V	V_{CC} = 4.5V, I_S = −10 mA
V_{OH}	Output High Voltage	2.4	3.2		V	I_{OH} = −2.4 mA, V_{CC} = 4.5V
V_{OL}	Output Low Voltage		0.3	0.45	V	V_{CC} = 4.5V, I_{OL} = 10 mA
I_{CC}	Power Supply Current		150	185	mA	V_{CC} = 5.5V
V_{IL}	Input "Low" Voltage			0.85	V	V_{CC} = 5.0V ± 10%
V_{IH}	Input "High" Voltage	2.0			V	V_{CC} = 5.0V ± 10%

NOTES:
1. Typical values are for T_A = 25°C and nominal supply voltages.
2. Unmeasured outputs are open during this test.

CAPACITANCE[1] (T_A = 25°C, f = 1 MHz)

Symbol	Parameter	Limits		Unit	Test Conditions
		Typ.	Max.		
C_{INA}	Address Input Capacitance	4	10	pF	V_{CC} = 5V V_{IN} = 2.5V
C_{INS}	Chip-Select Input Capacitance	6	10	pF	V_{CC} = 5V V_{IN} = 2.5V
C_{OUT}	Output Capacitance	7	12	pF	V_{CC} = 5V V_{OUT} = 2.5V

NOTES:
1. This parameter is only periodically sampled and is not 100% tested.

A.C. CHARACTERISTICS (V_{CC} = +5V ± 10%, T_A = 0°C to +75°C)

Symbol	Parameter	Max. Limits		Unit	Test Conditions
		3636B-1	3636B-2		
t_A	Address to Output Delay	35	45	ns	$CS_1 = V_{IL}$ and $CS_2 = CS_3 = V_{IH}$ to select the PROM.
t_{EN}	Output Enable Time	25	25	ns	
t_{DIS}	Output Disable Time	25	25	ns	

SWITCHING CHARACTERISTICS

Conditions of Test:

Input pulse amplitudes: 2.5V
Input pulse rise and fall times of 5 nanoseconds between 1 volt and 2 volts
Speed measurements are made at 1.5 volt levels
Output loading is 10 mA and 30 pF
Frequency of test: 2.5 MHz

10 mA TEST LOAD

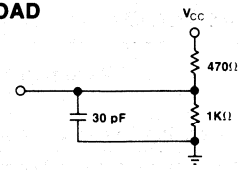

WAVEFORMS

ADDRESS TO OUTPUT DELAY

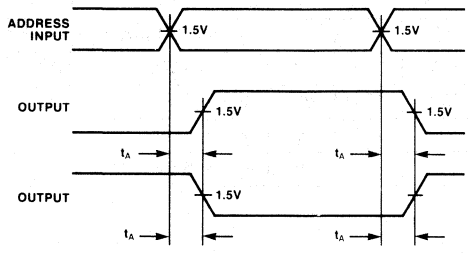

CHIP SELECT TO OUTPUT DELAY

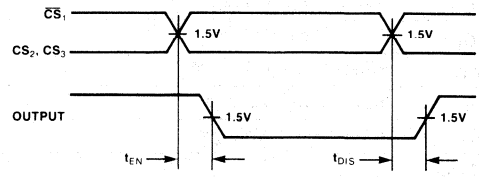

82S181/82HS181
8K (1K x 8) BIPOLAR PROM

82S181	**70 ns Max.**
82HS181	**50 ns Max.**

- **Fast Access Time: 50 ns for 82HS181**
- **Low Power Dissipation: 0.08 mW/Bit Typically**
- **Four Chip Select Inputs for Easy Memory Expansion**
- **Three-State Outputs**
- **Hermetic 24-Pin DIP**
- **Polycrystalline Silicon Fuses for Higher Fuse Reliability/Higher Programmability**

The Intel® 82S181 and 82HS181 are fully decoded 8,192-bit PROMs organized as 1024 words by 8 bits. The worst case access time of 50 ns is specified over the 0°C to 75°C temperature range. There are four chip selects provided to facilitate expansion into larger PROM arrays. The PROMs use the Schottky-clamped TTL technology with polycrystalline silicon fuses. All outputs are initially high and logic low levels can be electrically programmed in selected bit locations.

This 8,192-bit PROM uses the most advanced technology available. As a result, the 82S181 and 82HS181 combine higher performance and lower power in a smaller die. The 82S181 and 82HS181 are packaged in hermetic 24-pin dual in-line packages with industry-standard pin configurations.

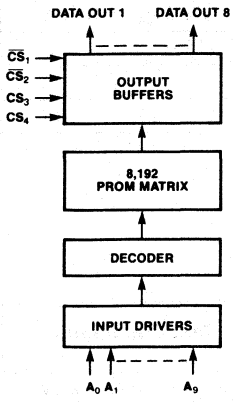

Figure 1. Block Diagram

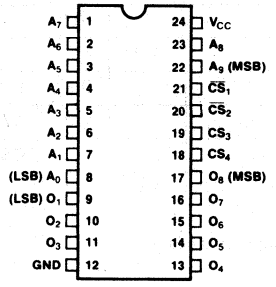

PIN NAMES

A_0–A_9	ADDRESS INPUTS
$\overline{CS}_1$, $\overline{CS}_2$, CS_3, CS_4	CHIP SELECT INPUTS(1)
O_1–O_8	DATA OUTPUTS

(1) To select the PROM $\overline{CS}_1 = \overline{CS}_2 = V_{IL}$ and $CS_3 = CS_4 = V_{IH}$

Figure 2. Pin Configuration

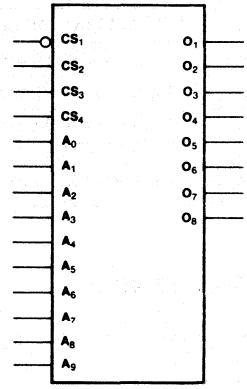

Figure 3. Logic Symbol

Intel Corporation Assumes No Responsibility for the Use of Any Circuitry Other Than Circuitry Embodied in an Intel Product. No Other Circuit Patent Licenses are Implied.
©INTEL CORPORATION, 1981.

OCTOBER 1981
ORDER NO. 210210-011

PROGRAMMING

The programming specifications are described in the PROM programming section of the Intel Data Catalog. The algorithm is precisely the same as that used to program all other Intel bipolar PROMs.

ABSOLUTE MAXIMUM RATINGS*

Temperature Under Bias ..... −65°C to +125°C
Storage Temperature ..... −65°C to +160°C
Output or Supply Voltages ..... −0.5V to 7 Volts
All Input Voltages ..... −1.5V to 5.5V
Output Currents ..... 100 mA

**NOTICE: Stresses above those listed under "Absolute Maximum Ratings" may cause permanent damage to the device. This is a stress rating only and functional operation of the device at these or any other conditions above those indicated in the operational sections of this specification is not implied. Exposure to absolute maximum rating conditions for extended periods may affect device reliability.*

D.C. CHARACTERISTICS (All Limits Apply for V_{CC} = +5.0V ± 5% , T_A = 0°C to +75°C)

Symbol	Parameter	Limits				Test Conditions
		Min.	Typ.[1]	Max.	Unit	
I_{FA}	Address Input Load Current		−0.05	−0.25	mA	V_{CC} = 5.25V, V_A = 0.45V
I_{FS}	Chip Select Input Load Current		−0.05	−0.25	mA	V_{CC} = 5.25V, V_S = 0.45V
I_{RA}	Address Input Leakage Current			40	μA	V_{CC} = 5.25V, V_A = 5.5V
I_{RS}	Chip Select Input Leakage Current			40	μA	V_{CC} = 5.25V, V_S = 5.5V
$\|I_O\|$	Output Leakage for High Impedance State			40	μA	V_O = 5.5V or 0.5V, V_{CC} = 5.25V, CS_1 = CS_2 = 2.4V
I_{SC}[2]	Output Short Circuit Current	−20	−40	−100	mA	V_O = 0V
V_{CA}	Address Input Clamp Voltage		−0.9	−1.5	V	V_{CC} = 4.75V, I_A = −10 mA
V_{CS}	Chip Select Input Clamp Voltage		−0.9	−1.5	V	V_{CC} = 4.75V, I_S = −10 mA
V_{OH}	Output High Voltage	2.4	3.2		V	I_{OH} = −2.4 mA, V_{CC} = 4.5V
V_{OL}	Output Low Voltage		0.3	0.45	V	V_{CC} = 4.75V, I_{OL} = 10 mA
I_{CC}	Power Supply Current		120	170	mA	V_{CC} = 5.25V
V_{IL}	Input "Low" Voltage			0.85	V	
V_{IH}	Input "High" Voltage	2.0			V	

NOTES:
1. Typical values are for T_A = 25°C and nominal supply voltages.
2. Unmeasured outputs are open during this test.

CAPACITANCE[1] (T_A = 25°C, f = 1 MHz)

Symbol	Parameter	Limits		Unit	Test Conditions
		Typ.	Max.		
C_{INA}	Address Input Capacitance	4	10	pF	V_{CC} = 5V V_{IN} = 2.5V
C_{INS}	Chip-Select Input Capacitance	4	10	pF	V_{CC} = 5V V_{IN} = 2.5V
C_{OUT}	Output Capacitance	6	12	pF	V_{CC} = 5V V_{OUT} = 2.5V

NOTES:
1. This parameter is only periodically sampled and is not 100% tested.

A.C. CHARACTERISTICS (V_{CC} = +5V ± 10%, T_A = 0°C to +75°C)

Symbol	Parameter	Max. Limits		Unit	Test Conditions
		82S181	82HS181		
t_A	Address to Output Delay	70	50	ns	$CS_1 = CS_2 = V_{IL}$ and
t_{EN}	Output Enable Time	40	30	ns	$CS_3 = CS_4 = V_{IH}$ to
t_{DIS}	Output Disable Time	40	30	ns	select the PROM.

SWITCHING CHARACTERISTICS

Conditions of Test:

Input pulse amplitudes: 2.5V
Input pulse rise and fall times of 5 nanoseconds between 1 volt and 2 volts
Speed measurements are made at 1.5 volt levels
Output loading is 10 mA and 30 pF
Frequency of test: 2.5 MHz

10mA TEST LOAD

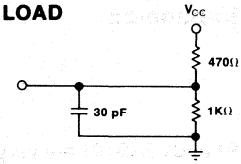

WAVEFORMS

ADDRESS TO OUTPUT DELAY

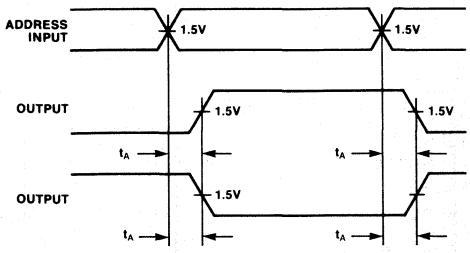

CHIP SELECT TO OUTPUT DELAY

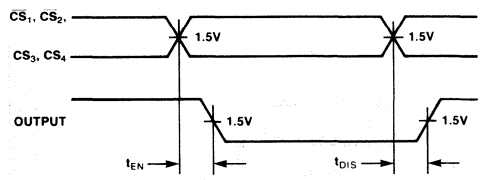

82S191/82HS191
16K (2K x 8) BIPOLAR PROM

82S191	**70 ns Max.**
82HS191	**50 ns Max.**

- **Fast Access Time: 25 ns Typically**
- **Low Power Dissipation: 0.05 mW/Bit Typically**
- **Three Chip Select Inputs for Easy Memory Expansion**
- **Three-State Outputs**
- **Hermetic 24-Pin DIP**
- **Polycrystalline Silicon Fuses for Higher Fuse Reliability/Higher Programmability**

The Intel 82S191 and 82HS191 are very fast, fully decoded 16,384-bit PROMs organized as 2048 words by 8 bits. The worst case access time is 50 ns over a temperature range of 0°C to 75°C. There are three chip selects provided to facilitate expansion into larger PROM arrays. The PROMs use the Schottky-clamped TTL technology with polycrystalline silicon fuses. All outputs are initially high and logic low levels can be electrically programmed in selected bit locations.

The Intel 82S191 and 82HS191 are designed for use in performance-based systems. This 16,384-bit PROM uses the most advanced technology available. As a result, the Intel 82S191 and 82HS191 combine higher performance and equivalent power in a smaller die than previous 16K Bipolar PROM designs. The Intel 82S191 and 82HS191 are packaged in hermetic 24-pin dual in-line packages with industry-standard pin configurations.

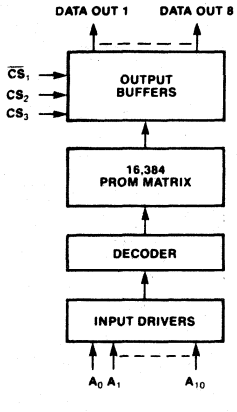

Figure 1. Block Diagram

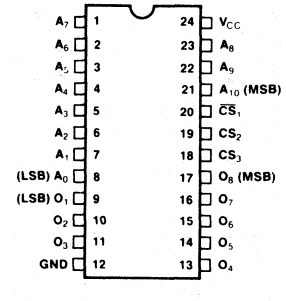

PIN NAMES

A_0–A_{10}	ADDRESS INPUTS
$\overline{CS}_1$, CS_2, CS_3	CHIP SELECT INPUTS(1)
O_1–O_8	DATA OUTPUTS

(1) To select the PROM $\overline{CS}_1 = V_{IL}$ and $CS_2 = CS_3 = V_{IH}$

Figure 2. Pin Configuration

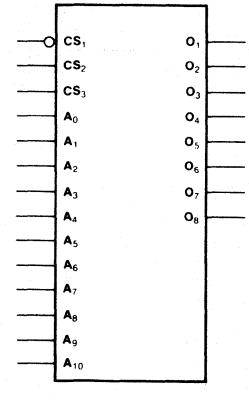

Figure 3. Logic Symbol

Intel Corporation Assumes No Responsibility for the Use of Any Circuitry Other Than Circuitry Embodied in an Intel Product. No Other Circuit Patent Licenses are Implied
© INTEL CORPORATION, 1981.

OCTOBER 1981
ORDER NO. 210211-001

PROGRAMMING

The programming specifications are described in the PROM programming section of the Intel Data Catalog. The algorithm is precisely the same as that used to program all other Intel bipolar PROMs.

ABSOLUTE MAXIMUM RATINGS*

Temperature Under Bias ..... −65°C to +125°C
Storage Temperature ..... −65°C to +160°C
Output or Supply Voltages ..... −0.5V to 7 Volts
All Input Voltages ..... −1.5V to 5.5V
Output Currents ..... 100 mA

**NOTICE: Stresses above those listed under "Absolute Maximum Ratings" may cause permanent damage to the device. This is a stress rating only and functional operation of the device at these or any other conditions above those indicated in the operational sections of this specification is not implied.*

D.C. CHARACTERISTICS (All Limits Apply for V_{CC} = +5.0 .V ± 5% , T_A = 0°C to +75°C)

Symbol	Parameter	Limits			Unit	Test Conditions
		Min.	Typ.[1]	Max.		
I_{FA}	Address Input Load Current		−0.05	−0.25	mA	V_{CC} = 5.25V, V_A = 0.45V
I_{FS}	Chip Select Input Load Current		−0.05	−0.25	mA	V_{CC} = 5.25V, V_S = 0.45V
I_{RA}	Address Input Leakage Current			40	μA	V_{CC} = 5.25V, V_A = 5.5V
I_{RS}	Chip Select Input Leakage Current			40	μA	V_{CC} = 5.25V, V_S = 5.5V
$\|I_O\|$	Output Leakage for High Impedance State			40	μA	V_O = 5.5V or 0.5V, V_{CC} = 5.25V, CS_1 = 2.4V
I_{SC}[2]	Output Short Circuit Current	−20	−40	−100	mA	V_O = 0V
V_{CA}	Address Input Clamp Voltage		−0.9	−1.5	V	V_{CC} = 4.75V, I_A = −10 mA
V_{CS}	Chip Select Input Clamp Voltage		−0.9	−1.5	V	V_{CC} = 4.75V, I_S = −10 mA
V_{OH}	Output High Voltage	2.4	3.2		V	I_{OH} = −2.4 mA, V_{CC} = 4.5V
V_{OL}	Output Low Voltage		0.3	0.45	V	V_{CC} = 4.75V, I_{OL} = 10 mA
I_{CC}	Power Supply Current		130	175	mA	V_{CC} = 5.25V
V_{IL}	Input "Low" Voltage			0.85	V	V_{CC} = 5.0V, ± 5%
V_{IH}	Input "High" Voltage	2.0			V	V_{CC} = 5.0V, ± 5%

NOTES:
1. Typical values are for T_A = 25°C and nominal supply voltages.
2. Unmeasured outputs are open during this test.

CAPACITANCE(1) (T_A = 25°C, f = 1 MHz)

Symbol	Parameter	Limits		Unit	Test Conditions
		Typ.	Max.		
C_{INA}	Address Input Capacitance	4	10	pF	V_{CC} = 5V V_{IN} = 2.5V
C_{INS}	Chip-Select Input Capacitance	6	10	pF	V_{CC} = 5V V_{IN} = 2.5V
C_{OUT}	Output Capacitance	7	12	pF	V_{CC} = 5V V_{OUT} = 2.5V

NOTES:
1. This parameter is only periodically sampled and is not 100% tested.

A.C. CHARACTERISTICS (V_{CC} = +5V ± 10%, T_A = 0°C to +75°C)

Symbol	Parameter	Max. Limits		Unit	Test Conditions
		82S191	82HS191		
t_A	Address to Output Delay	70	50	ns	$CS_1 = V_{IL}$ and $CS_2 = CS_3 = V_{IH}$ to select the PROM.
t_{EN}	Output Enable Time	30	25	ns	
t_{DIS}	Output Disable Time	30	25	ns	

SWITCHING CHARACTERISTICS

Conditions of Test:

Input pulse amplitudes: 2.5V
Input pulse rise and fall times of 5 nanoseconds between 1 volt and 2 volts
Speed measurements are made at 1.5 volt levels
Output loading is 10 mA and 30 pF
Frequency of test: 2.5 MHz

10 mA TEST LOAD

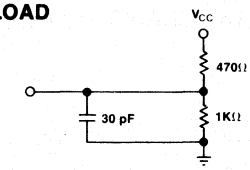

WAVEFORMS

ADDRESS TO OUTPUT DELAY

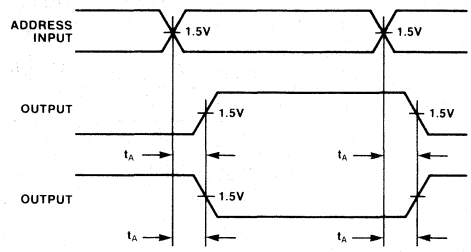

CHIP SELECT TO OUTPUT DELAY

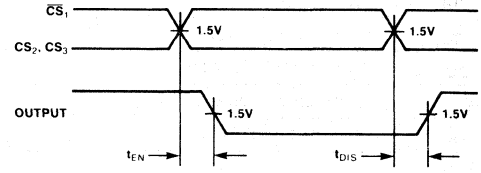

PRELIMINARY

82S321/82HS321
32K (4K x 8) BIPOLAR PROM

82S321	50 ns Max.
82HS321	40 ns Max.

- **30 ns Typical Access**
- **Low Power Dissipation: 0.02 mW/Bit Typically**
- **Two Chip Select Inputs for Easy Memory Expansion**
- **Three-State Outputs**
- **Hermetic 24-Pin DIP**
- **Polycrystalline Silicon Fuses for Higher Fuse Reliability/Higher Programmability**

The Intel 82S321/82HS321 are high-performance 32,768-bit PROMs organized as 4096 words by 8 bits. The worst case access time of 40 ns is specified over the 0°C to 75°C temperature range. There are two chip selects provided to facilitate expansion into larger PROM arrays. The PROMs use the Schottky clamped TTL technology with polycrystalline silicon fuses. All outputs are initially high and logic low levels can be electrically programmed in selected bit locations.

The 82S321/82HS321 allows present 4K, 8K and 16K PROM users to increase density significantly without sacrificing performance. Intel's 82S321/82HS321 are packaged in hermetic 24-pin dual in-line packages. These 32,768-bit PROMs use the most advanced technology available. As a result, the 82S321/82HS321 combine more high performance, high density and lower power per bit than previous Bipolar PROM designs.

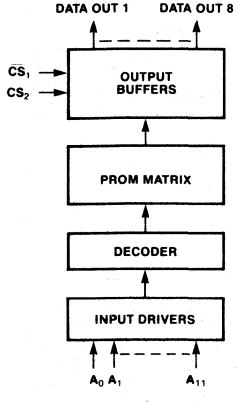

Figure 1. Block Diagram

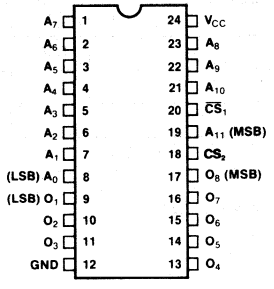

PIN NAMES

A_0–A_{11}	ADDRESS INPUTS
$\overline{CS}_1$, CS_2	CHIP SELECT INPUTS[1]
O_1–O_8	DATA OUTPUTS

(1) To select the PROM $\overline{CS}_1$ V_{IL} and CS_2 = V_{IH}

Figure 2. Pin Configuration

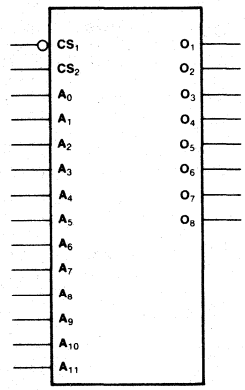

Figure 3. Logic Symbol

Intel Corporation Assumes No Responsibilty for the Use of Any Circuitry Other Than Circuitry Embodied in an Intel Product. No Other Circuit Patent Licenses are Implied.
© INTEL CORPORATION, 1981.

OCTOBER 1981
ORDER NO. 210212-001

PROGRAMMING

The programming specifications are described in the PROM programming section of the Intel Data Catalog. This algorithm is precisely the same as that used to program all other Intel Bipolar PROMs.

ABSOLUTE MAXIMUM RATINGS*

Temperature Under Bias ..... −65°C to +125°C
Storage Temperature ..... −65°C to +160°C
Output or Supply Voltages ..... −0.5V to 7 Volts
All Input Voltages ..... −1.5V to 5.5V
Output Currents ..... 100 mA

**NOTICE: Stresses above those listed under "Absolute Maximum Ratings" may cause permanent damage to the device. This is a stress rating only and functional operation of the device at these or any other conditions above those indicated in the operational sections of this specification is not implied.*

D.C. CHARACTERISTICS (All Limits Apply for V_{CC} = +5.0V ± 5%, T_A = 0°C to +75°C)

Symbol	Parameter	Limits			Unit	Test Conditions
		Min.	Typ.[1]	Max.		
I_{FA}	Address Input Load Current		−0.05	−0.25	mA	V_{CC} = 5.25V, V_A = 0.45V
I_{FS}	Chip Select Input Load Current		−0.05	−0.25	mA	V_{CC} = 5.25V, V_S = 0.45V
I_{RA}	Address Input Leakage Current			40	μA	V_{CC} = 5.25V, V_A = 5.5V
I_{RS}	Chip Select Input Leakage Current			40	μA	V_{CC} = 5.25V, V_S = 5.5V
$\|I_O\|$	Output Leakage for High Impedance State			40	μA	V_O = 5.5V or 0.5V, V_{CC} = 5.25V, CS_1 = 2.4V
I_{SC}[2]	Output Short Circuit Current	−15	−40	−100	mA	V_O = 0V
V_{CA}	Address Input Clamp Voltage		−0.9	−1.5	V	V_{CC} = 4.75V, I_A = −10 mA
V_{CS}	Chip Select Input Clamp Voltage		−0.9	−1.5	V	V_{CC} = 4.75V, I_S = −10 mA
V_{OH}	Output High Voltage	2.4	3.2		V	I_{OH} = −2.4 mA, V_{CC} = 4.5V
V_{OL}	Output Low Voltage		0.3	0.45	V	V_{CC} = 4.75, I_{OL} = 10 mA
I_{CC}	Power Supply Current		130	175	mA	V_{CC} = 5.25V
V_{IL}	Input "Low" Voltage			0.85	V	V_{CC} = 5.0V ± 5%
V_{IH}	Input "High" Voltage	2.0			V	V_{CC} = 5.0V ± 5%

NOTES:
1. Typical values are for T_A = 25°C and nominal supply voltages.
2. Unmeasured outputs are open during this test.

CAPACITANCE[3] (T_A = 25°C, f = 1 MHz)

Symbol	Parameter	Limits		Unit	Test Conditions
		Typ.	Max.		
C_{INA}	Address Input Capacitance	4	10	pF	V_{CC} = 5V V_{IN} = 2.5V
C_{INS}	Chip-Select Input Capacitance	6	10	pF	V_{CC} = 5V V_{IN} = 2.5V
C_{OUT}	Output Capacitance	7	12	pF	V_{CC} = 5V V_{OUT} = 2.5V

NOTE:
3. This parameter is only periodically sampled and is not 100% tested.

A.C. CHARACTERISTICS (V_{CC} = +5V ± 5%, T_A = 0°C to +75°C)

Symbol	Parameter	Max. Limits		Unit	Test Conditions
		82S321	82HS321		
t_A	Address to Output Delay	50	40	ns	$CS_1 = V_{IL}$ and $CS_2 = V_{IH}$ to select the PROM.
t_{EN}	Output Enable Time	35	30	ns	
t_{DIS}	Output Disable Time	35	30	ns	

SWITCHING CHARACTERISTICS

Conditions of Test:

Input pulse amplitudes: 2.5V
Input pulse rise and fall times of 5 nanoseconds between 1 volt and 2 volts
Speed measurements are made at 1.5 volt levels
Output loading is 10 mA and 30 pF
Frequency of test: 2.5 MHz

10 mA TEST LOAD

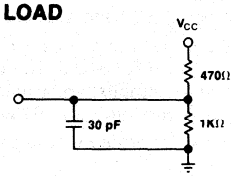

WAVEFORMS

ADDRESS TO OUTPUT DELAY

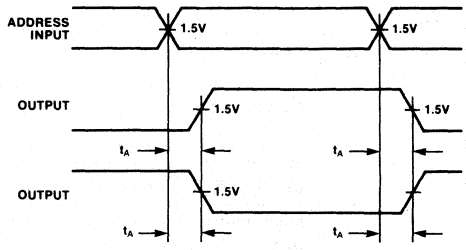

CHIP SELECT TO OUTPUT DELAY

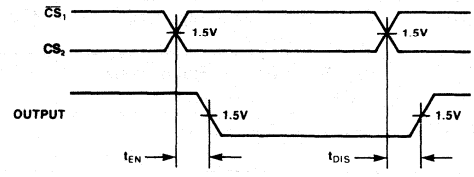

Bipolar PROM Programming

1. A 5mA current must be forced into the output to be programmed by a current source. The current source must be clamped to V_{CC} by a silicon diode. All the other inputs must be floating until it is their turn for programming. The V_{CC} power supply and the chip select (CS) input is pulsed as shown in Figures 1 and 2. The width of V_{CC} is linearly increased from 0.2μs to 8μs according to the ramp time shown in Figure 3. The total ramp time for a group of four outputs is 180ms for a group of eight outputs.

   The V_{CC} program pulses are multiplexed during a cycle time to the outputs of the word to be programmed. The cycle time (t_{CYC}) between the V_{CC} program pulses to the same output will increase as the V_{CC} program pulse width increases from 0.2μs to 8μs. The time (t_D) between V_{CC} pulses of two different outputs is constant at 1.8μs.

2. All outputs must be continuously monitored for programming verification. This verification must occur after V_{CC} has been at 4.5V for 90% of t_D and prior to V_{CC} rising to 12.5V. The program/verification cycles must still be applied (with the pulse width still linearly increasing to a maximum of 8μs) even though the output has been sensed as being programmed. An additional 128 verifications (i.e., 128 program/verify cycles) on each output must be obtained to insure a correctly programmed output. This additional 128 verification is a minimum number and must occur *after* all the bits of the word are sensed as being programmed. Please refer to Figure 1 for the timing waveforms.

   More than 128 program/verify cycles may be required to achieve the 128 verifications on each bit. The cycles should still continue even if one bit fails, since the verifications are not required to be in consecutive sequence. After the 128 verifications have occurred for all bits, a final V_{CC} and CS pulse at a width of 2.5ms is simultaneously applied to all outputs that are being programmed. Programming should cease if the 128 verifications are not achieved in 800ms.

3. A 4mA ± 50% I_{CS} current must also be forced into an appropriate chip select. I_{CS} is forced into CS_4 (pin 18) of 3604A/3624A, CS_2 (pin 10) of 3625A, CS_3 (pin 19) of 3628, and CS_2 (pin 19) of 3636. The 4mA current into the chip select input may be easily accomplished by using a 1.2K resistor connected to a ±15V power supply. The voltage on the chip select input will be approximately 10V with the 1.2K resistor.

4. The I_{CC} source used for programming should be able to supply 600mA during V_{IH}.

Table V. Programming Characteristics

$T_A = 25°C$

Symbol	Parameter	Limits				Conditions
		Min.	Nom.	Max.	Units	
V_{IH1}	V_{CC} Program Pulse Amplitude	12	12.5	13	V	
V_{IH2}	$\overline{CS}$ Program Pulse Amplitude	3	5	5.5	V	
V_{IL1}	V_{CC} During Verify	4.25[1]	4.5	4.75	V	
V_{IH2}	$\overline{CS}$ During Verify	0	0.2	0.4	V	
t_{PW1}	V_{CC} Pulse Width at Beginning of Pulse Train	160	200	240	ns	Measured at 12V
t_{PW2}	V_{CC} Pulse Width at End of Pulse Train	7.2	8	8.8	μs	Measured at 12V
T_{CSS}	Chip Select Setup Time	0			ns	Measured from 1.5V on rising edge of $\overline{CS}$ to 5.0V on rising edge of V_{CC}
T_{CSH}	Chip Select Hold Time	100			ns	Measured from 5.0V on falling edge of V_{CC} to 1.5V on falling edge of $\overline{CS}$
T_R	V_{CC} Rise Time	300	400	500	ns	Measured from 5V to 12V on V_{CC}
T_F	V_{CC} Fall Time	50	100	200	ns	Measured from 12V to 5V on V_{CC}
T_{CYC}	Time Between Pulses to Same Output	9	10		μs	Measured at 5V on V_{CC}
T_{OP}	DC Program Time After Verification Has Been Obtained	2.2	2.5	2.8	ms	Measured at 12V
T_D	Time Between V_{CC} Pulses to Successive Outputs	1.5	1.8		μs	Measured at 5V on V_{CC}
T_{RAMP}	Time During Which V_{CC} Pulse Width is Increased Linearly from t_{PW1} to t_{PW2} — 4 outputs	160	180	200	ms	
	8 outputs	320	360	400		
I_{CS}	Chip Select Input Current (See Programming Instruction 3 for Details)	2	4	6	mA	I_{CS} should be generated using a 1.2K resistor from a 15V power supply

NOTE: 1. The minimum V_{IL1} for the 3604AL (low power) is 4.5V

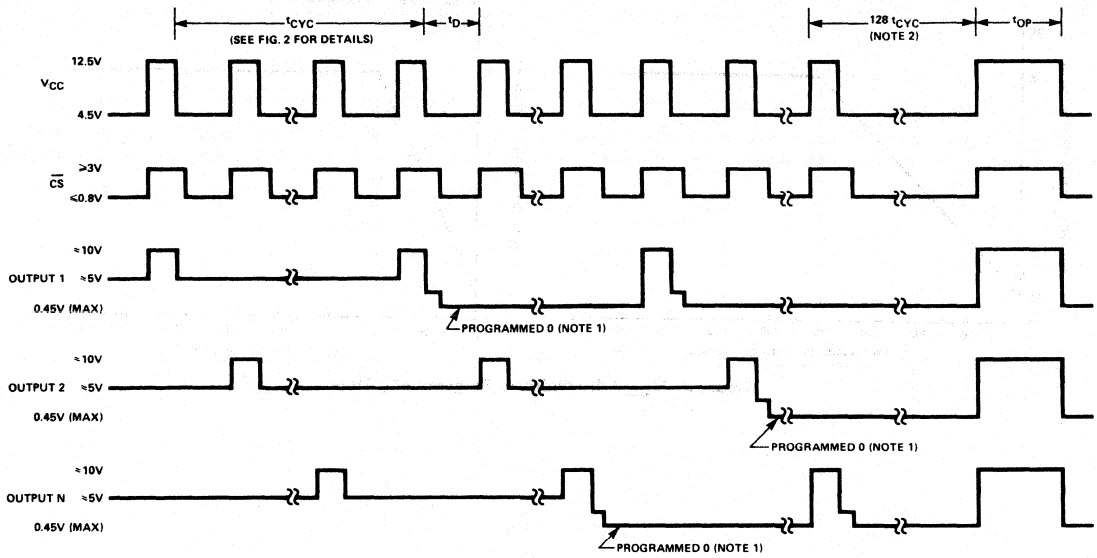

Figure 1. Programming Cycles.

NOTES: 1. PROGRAM VERIFICATION MUST OCCUR AFTER V_{CC} HAS BEEN AT 4.5V FOR 90% OF t_D AND PRIOR TO V_{CC} RISING TO 12.5V. THE PROGRAMMED OUTPUT IS ≤0.45V WHEN $\overline{CS}$ ≤0.8V AND FLOATING WHEN $\overline{CS}$ ≥ 3V.

2. AFTER THE LAST BIT HAS BEEN PROGRAMMED, 128 ADDITIONAL VERIFICATIONS ARE REQUIRED FOR EACH OUTPUT TO BE CORRECTLY PROGRAMMED.

3. AFTER THE 128 PROGRAM VERIFICATIONS, A FINAL 2.5 ms V_{CC} AND $\overline{CS}$ PULSE SHOULD BE APPLIED WHILE SIMULTANEOUSLY ENABLING THE CURRENT SOURCES TO ALL OUTPUTS WHICH ARE TO BE PROGRAMMED.

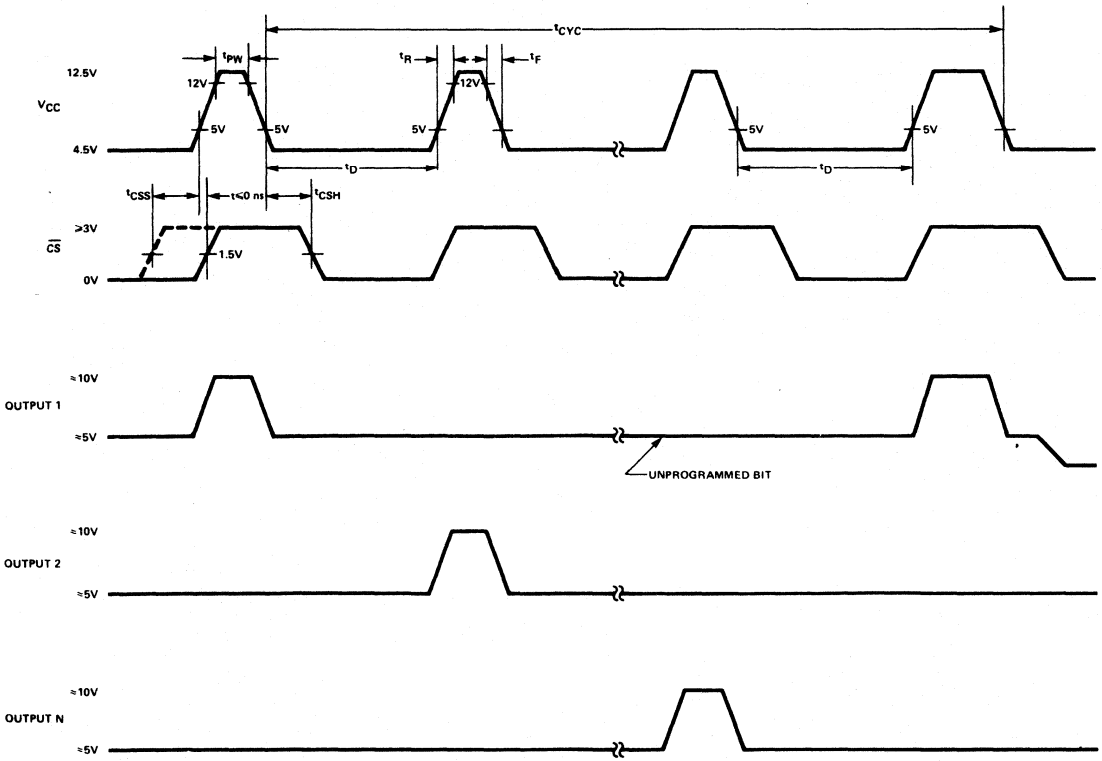

Figure 2. Programming Cycle Details.

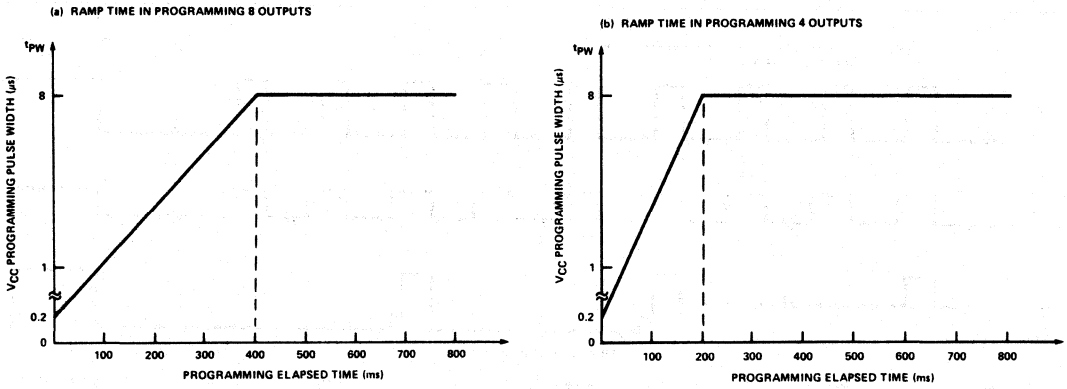

Figure 3. V_{CC} Pulse Width vs. Programming Time.

BIPOLAR PROM FAMILY

Type	No. of Bits	Organization	No. of Pins	Output	Maximum Access (ns)	Maximum Power Dissipation (mW)	Operating Temperature Range (°C)	Power Supply (V)
3628A-1	8192	1024x8	24	T.S.	50	998	0 to 75	5V ± 10%
3628A-3	8192	1024x8	24	T.S.	70	998	0 to 75	5V ± 10%
3628A-4	8192	1024x8	24	T.S.	90	998	0 to 75	5V ± 10%
3636	16384	2048x8	24	T.S.	80	998	0 to 75	5V ± 10%
3636-1	16384	2048x8	24	T.S.	65	998	0 to 75	5V ± 10%
3636B-1	16384	2048x8	24	T.S.	35	998	0 to 75	5V ± 10%
3636B-2	16384	2048x8	24	T.S.	45	998	0 to 75	5V ± 10%
M3636	16384	2048x8	24	T.S.	80	998	−50 to 125	5V ± 5%

BIPOLAR PROM CROSS REFERENCE

Part Number	Prefix and Manufacturer	Organization	Intel Part Number	
			Direct Replacement	For New Designs
82S181	N-Signetics	1024x8	3628A-3	3628A-1
82S191	N-Signetics	2048x8	3636	3636B-1
82S191	S-Signetics	2048x8	M3636	

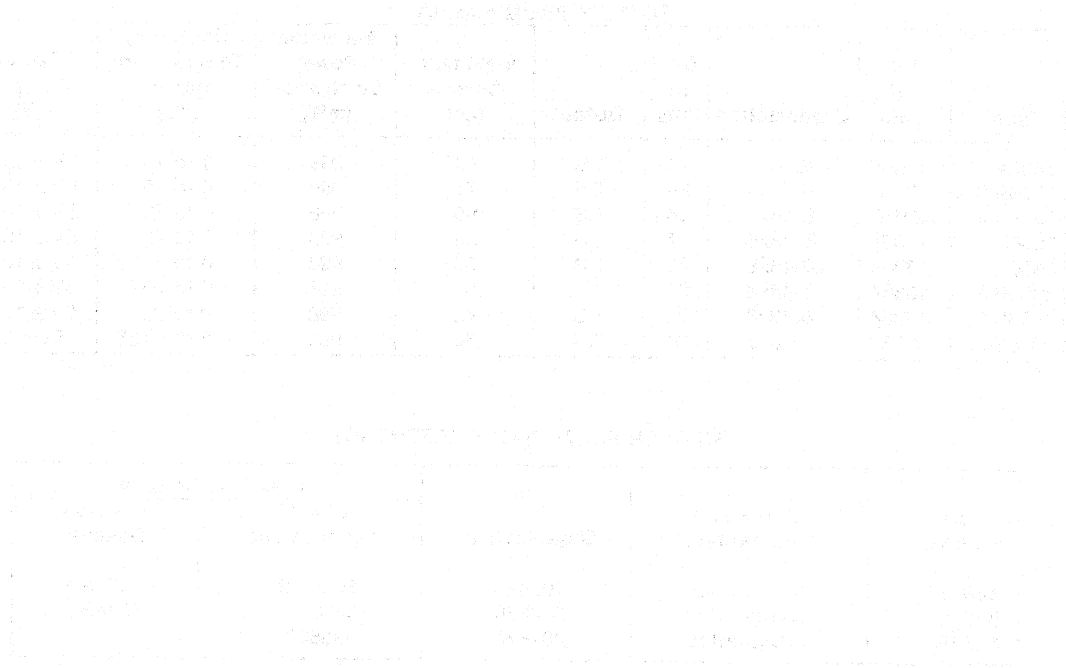

Magnetics

3

BPK70
1 MBIT BUBBLE STORAGE SUBSYSTEM

- Contains Components for Production of 1 MBit Bubble Storage Subsystem
- One 7230 Current Pulse Generator
- One 7242 Dual Formatter/Sense Amplifier
- One 7250 Coil Pre-Driver
- Two 7254 Quad VMOS Drive Transistors
- One 7110 1 MBit Bubble Memory
- One 7904 Socket for 7110

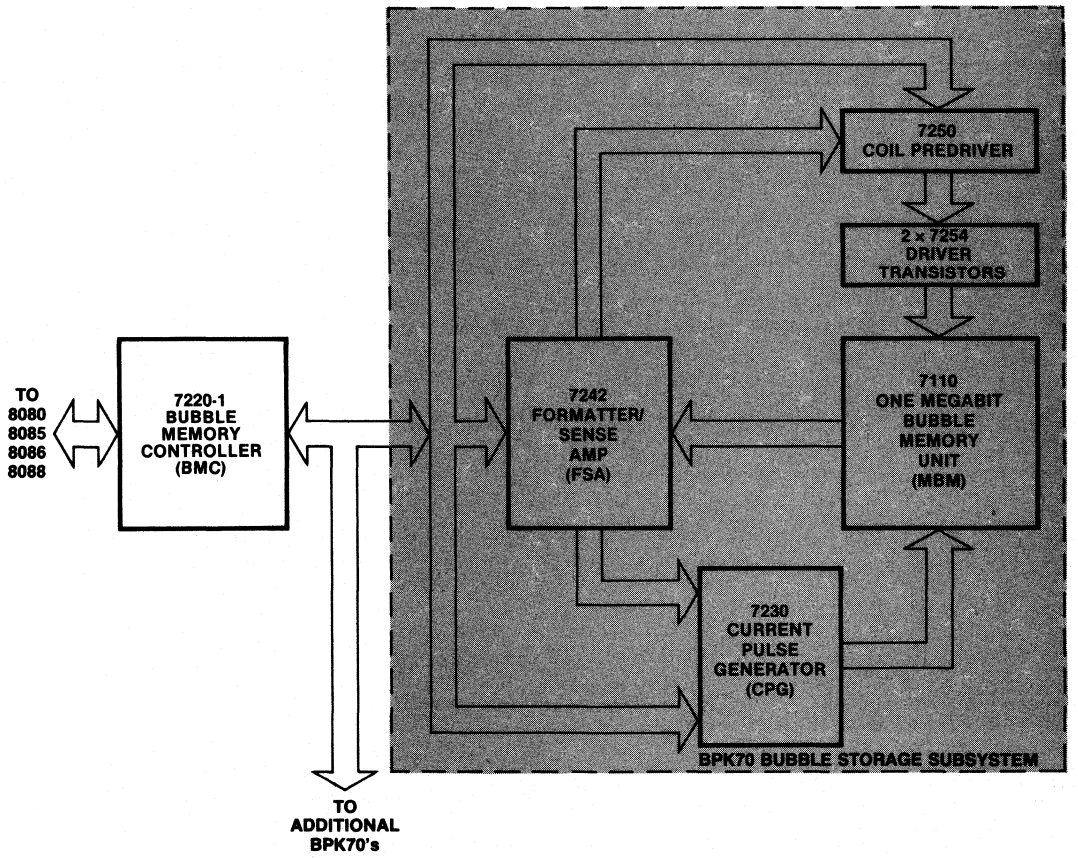

ORDER INFORMATION

Part Number	Description
BPK70-0	0–50°C 1 MBit Bubble Storage Sub-System
BPK70-1	0–70°C 1 MBit Bubble Storage Sub-System
BPK70-2	10–50°C 1 MBit Bubble Storage Sub-System

BPK72
BUBBLE STORAGE PROTOTYPE KIT

- **One BPK70 1 Megabit Bubble Storage Subsystem**
- **One 7220-1 Controller**
- **Blank 10 cm x 10 cm PC Board for Assembly**
- **Complete with Accessories and Documentation for Prototyping**

BPK72 prototype kit contains the necessary components, accessories and documentation required to build a 1 megabit bubble storage prototype system with minimum design effort. Application information on system interconnections is included.

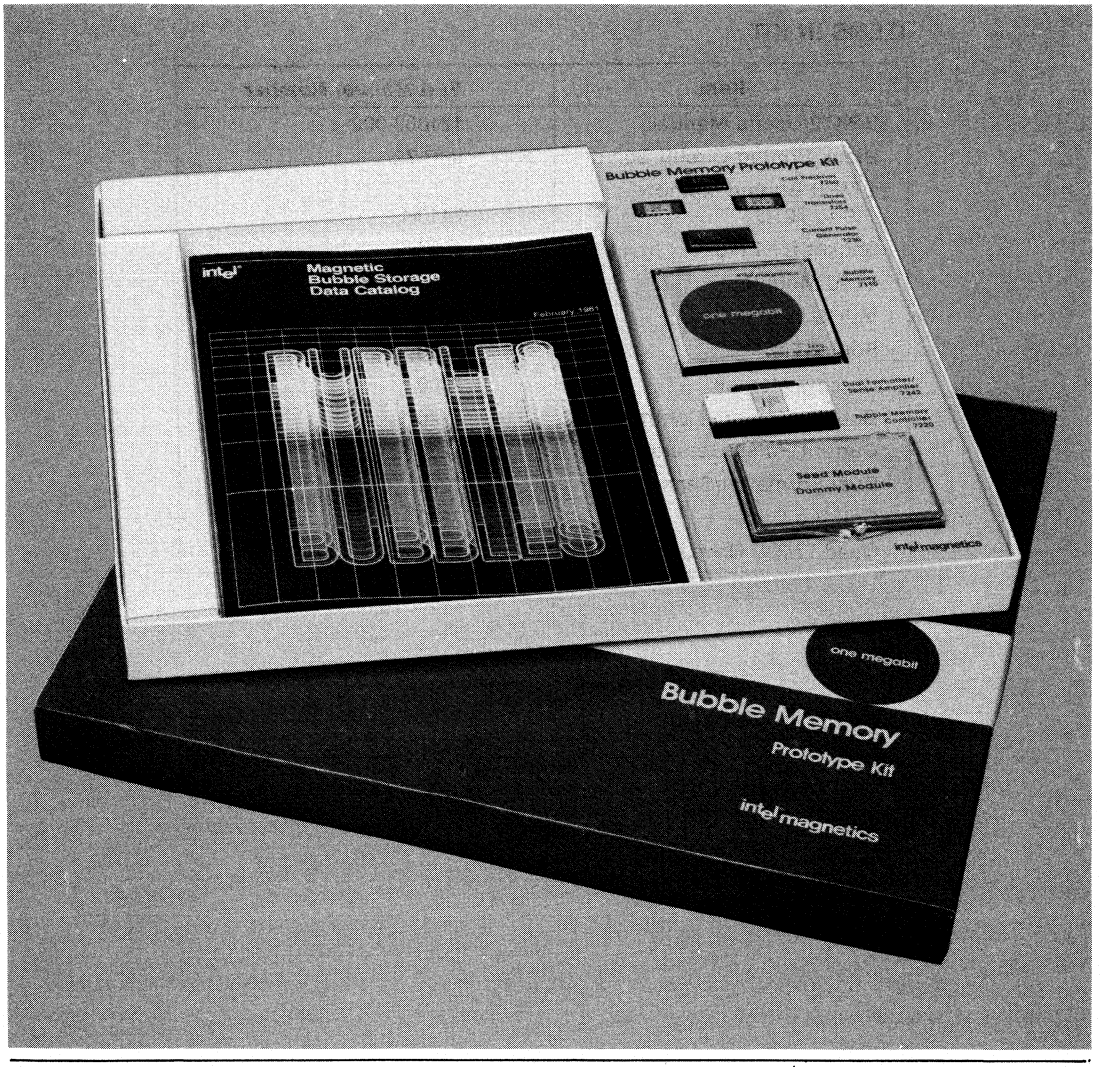

The following are trademarks of Intel Corporation and may be used only to identify Intel products: i, int_el, INTEL, INTELLEC, MCS, ^{i}m, iCS, ICE, UPI, BXP, iSBC, iSBX, INSITE, iRMX, CREDIT, RMX/80, μScope, Multibus, PROMPT, Promware, Megachassis, Library Manager, MAIN MULTI MODULE, and the combination of MCS, ICE, SBC, RMX or iCS and a numerical suffix; e.g., iSBC-80.
©INTEL CORPORATION, 1981

ORDERING INFORMATION

Order Code	Description
BPK72-1	0–70°C 1 Megabit Storage System Prototype Kit

ITEMS IN KIT

Item	Part/Manual Number
BPK72 User's Manual	121685-002
Blank Printed Circuit Board	IMB-72
1 MBit Bubble Memory, 0 to 70°C	7110-1
Socket for 7110	7904
Seed Module	7901
VMOS Transistor	7902
Solder Tip	7903
Dummy Module	7900
Bubble Memory Controller	7220-1
Current Pulse Generator	7230
Dual Formatter/Sense Amp	7242
Coil Pre-Driver	7250
Quad VMOS Drive Transistors	2 x 7254

7110
1 MEGABIT BUBBLE MEMORY

7110-0	0-50°C
7110-1	0-70°C
7110-2	10-50°C

- **1,048,576 Bits of Usable Data Storage**
- **Non-Volatile, Solid-State Memory**
- **True Binary Organization: 512 Bit Page and 2048 Pages**
- **Major Track — Minor Loop Architecture**
- **Redundant Loops with On-Chip Loop Map and Index**
- **Block Replicate for Read: Block Swap for Write**
- **Single Chip 20-Pin Dual In-Line Leadless Package and Socket**
- **Small Physical Volume**
- **Low Power per Bit**
- **Maximum Data Rate 100 Kbit/sec**

The Intel Magnetics 7110 is a very high density 1 megabit non-volatile, solid-state memory utilizing the magnetic bubble technology. The usable data storage capacity is 1,048,576 bits. The defect tolerant design incorporates redundant storage loops. The gross capacity of Intel Magnetics bubble memory is 1,310,720 bits.

The 7110 has a true binary organization to simplify system design, interfacing, and system software. The device is organized as 256 data storage loops each having 4096 storage bits. When used with Intel Magnetics complete family of support electronics the resultant minimum system is configured as 128K bytes of usable data storage. The support circuits also provide automatic error correction and transparent handling of redundant loops.

The 7110 has a major track-minor loop architecture. It has separate read and write tracks. Logically, the data is organized as a 512 bit page with a total of 2048 pages. The redundant loop information is stored on-chip in the bootstrap loop along with an index address code. When power is disconnected, the 7110 retains the data stored and the bubble memory system is restarted when power is restored via the support electronics under software control.

The 7110 is packaged in a dual in-line leadless package complete with permanent magnets and coils for the in-plane rotating field. In addition, the 7110 has a magnetic shield surrounding the bubble memory chip to protect the data from externally induced magnetic fields.

The 7110 operating data rate is 100 Kbit/sec. The 7110 can be operated asynchronously and has start/stop capability.

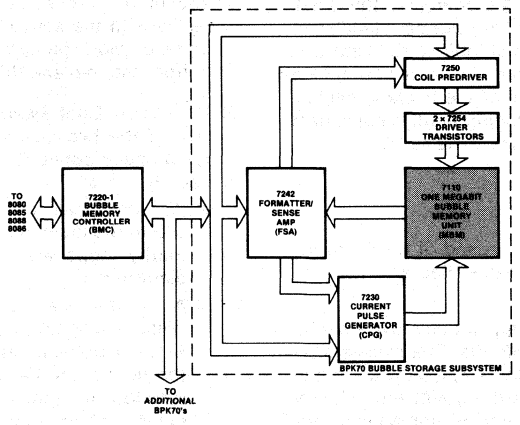

Block Diagram of Single Bubble Memory System — 128K Bytes

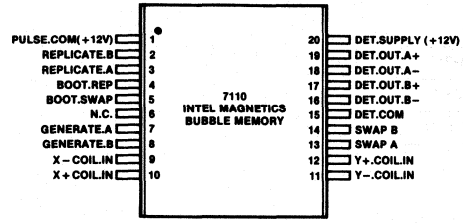

NOTE THAT PINS 13 AND 14 SHOULD BE EXTERNALLY CONNECTED.

PIN CONFIGURATION

GENERAL FUNCTIONAL DESCRIPTION

The Intel Magnetics 7110 is a 1 megabit bubble memory module organized as two identical 512K binary half sections. See Major Track-Minor Loop architecture diagram. Each half section is in turn organized as two 256K subsections referred to as *quads.*

The module consists of a bubble die mounted in a substrate that accommodates two orthogonal drive coils that surround the die. The drive coils produce a rotating magnetic field in the plane of the die when they are excited by 90° phase shifted triangular current waveforms. The rotating in-plane field is responsible for bubble propagation. One drive field rotation propagates all bubbles in the device one storage location (or cycle). The die-substrate-coil sub-assembly is enclosed in a package consisting of permanent magnets and a shield. The shield serves as a flux return path for the permanent magnets in addition to isolating the device from stray magnetic fields. The permanent magnets produce a bias field that is nearly perpendicular to the plane of the die. This field supports the existence of the bubble domains.

The package is constructed to maintain a 2.5 degree tilt between the plane of the bias magnet faces and the plane of the die. This serves to introduce a small component of the bias field into the plane of the die. During operation when the drive coils are energized this small in-plane component is negligible. During standby or when power is removed the small inplane field ensures that the bubbles will be confined to their appropriate storage locations. The direction of the in-plane field introduced by the package tilt (holding field) is coincident with the 0° phase direction of the drive field.

Quad Architecture

A 7110 quad sub-section is composed of the following elements shown on the architecture diagram.

1) Storage Loops
   Eighty identical 4096 bit storage loops provide a total maximum capacity of 327,680 bits. The excess storage is provided for two purposes: a) it allows a redundancy scheme to increase device yield; and b) it provides the extra storage required to implement error correction.

2) Replicating Generator (GEN)
   The generator operates by replicating a seed bubble that is always present at the generator site, (GEN).

3) Input Track and Swap Gate
   Bubbles following generation are propagated down an input track. Bubbles are transferred to/from the input track from/to the 80 storage loops via series connected swap gates spaced every four propagation cycles along the track. The swap gate's ability to transfer bubbles in both directions during an operation eliminates the overhead associated with removing old data from the loops before new data can be written. The swap gate is designed to function such that the logical storage loop position occupied by the bubble transferred out of each loop is filled by the bubble being transferred into each loop. Transferred out bubbles propagate down the remaining portion of the input track where they are dumped into a bubble bucket guard rail.

4) Output Track and Replicate Gate
   Bubbles are read out of the storage loops in a nondestructive fashion via a set of replicate gates. The bubble is split in two. The leading bubble is retained in the storage loop and the trailing bubble is transferred onto the output track. Replicate gates are spaced every four propagation cycles along the output track.

5) Detector
   Bubbles, following replication, are propagated along the output track to a detector that operates on the magneto-resistance principle. The cylindrical bubble domains are stretched into long strip domains by a chevron expander and are then propagated to the active portion of the detector. The detector consists of a stack of interconnected chevrons through which a current is passed. As the strip domain propagates through the stack, its magnetic flux causes a fractional change in stack resistance which produces an output signal on the order of a few millivolts. The strip domain following detection is propagated to a bubble bucket guard rail. A "dummy" detector stack sits in the immediate vicinity. It is connected in series with the active detector and serves to cancel common mode pickup which originates predominately from the in-plane drive field.

6) Boot Loop, Boot Swap, and Boot Replicate
   One of the two quads in each half chip contains a functionally active Boot Storage Loop. This loop is used to store:
   a) A loop mask code that defines which loops within the main storage area should be accessed. Faulty loops are "masked out" by the support electronics.
   b) A synchronization code that assigns data addresses (pages) to the data in the storage loops. Since bubbles move from one storage location to the next every field rotation, the actual physical location of a page of data is determined by the number of field rotations that have elapsed with respect to a reference.

The boot loop is read from and written into via the same input and output tracks as the main storage loops. However, it has independently accessed swap and replicate gates. The boot swap, under normal circumstances, is intended only to be used during basic initialization at the factory at which time loop mask and synchronization codes are written. The boot replicate is intended to be accessed every time power is applied to the bubble module and its peripheral control electronics. At such a time, the control electronics would read and store the mask information, plus utilize the synchronization information to establish the location of the data circulating within the loops.

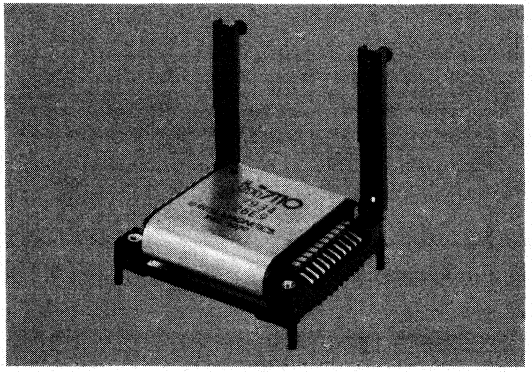

7110 PACKAGE SEATED IN SOCKET WITH ARMS UP

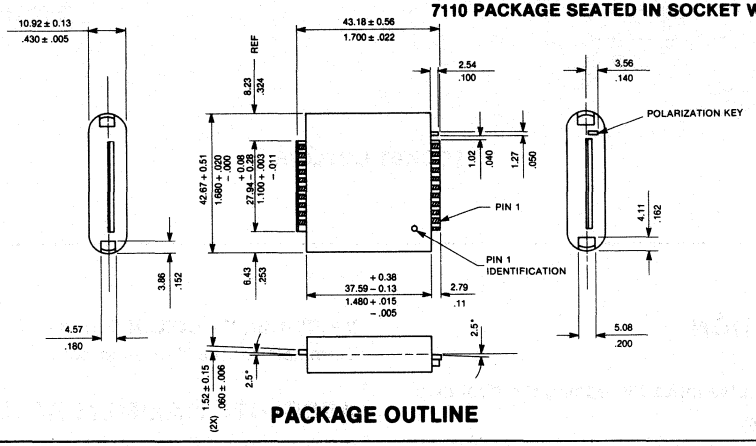

PACKAGE OUTLINE

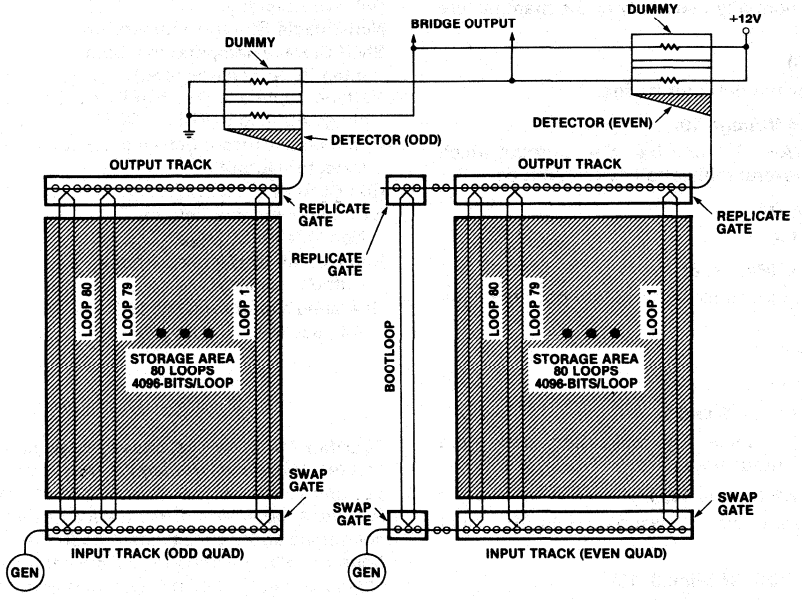

MAJOR TRACK-MINOR LOOP ARCHITECTURE OF 7110 (ONE HALF SHOWN)

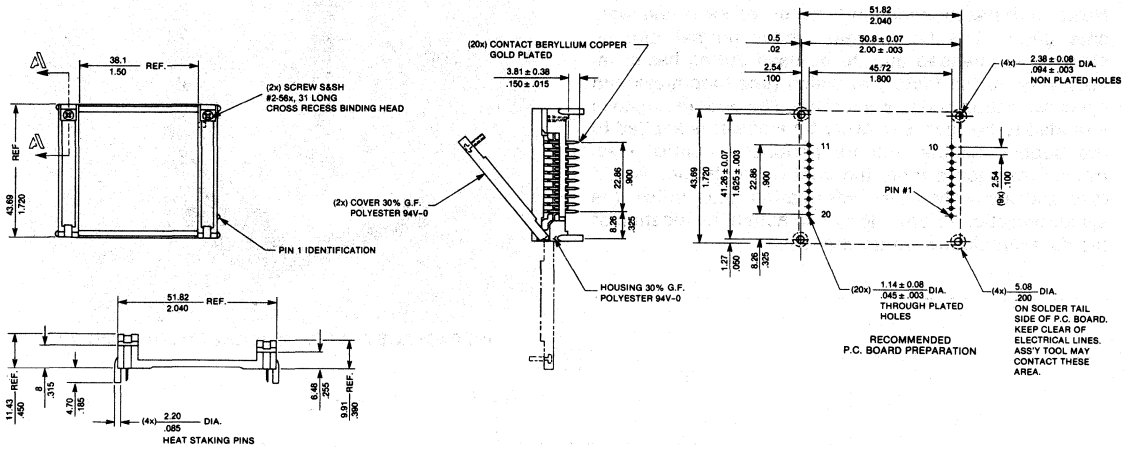

SOCKET OUTLINE

PIN DESCRIPTION

BOOT.REP (Pin 4)

Two-level current pulse input for reading the boot loop.

BOOT.SWAP (Pin 5)

Single-level current pulse for writing data into the boot loop. This pin is normally used only in the manufacture of the MBM.

DET.COM (Pin 15)

Ground return for the detector bridge.

DET.OUT (Pins 16 through 19)

Differential pair (A+, A− and B+, B−) outputs which have signals of several millivolts peak amplitude.

DET.SUPPLY (Pin 20)

+12 volt supply pin.

GEN.A and GEN.B (Pins 7, 8)

Two-level current pulses for writing data onto the input track.

PULSE.COM (Pin 1)

+12 volt supply pin.

REP.A and REP.B (Pins 3 and 2)

Two-level current pulses for replicating data from storage loops to output track.

SWAP.A and SWAP.B (Pins 13, 14)

Single-level current pulse for swapping data from input track to storage loops.

X−.COIL.IN, X+.COIL.IN (Pins 9, 10)

Terminals for the X or inner coil.

Y−.COIL.IN, Y+.COIL.IN (Pins 11, 12)

Terminals for the Y or outer coil.

ABSOLUTE MAXIMUM RATINGS*

Operating Temperature	0 − 70°C
Relative Humidity	95%
Non-Volatile Storage Temperature	−40 to + 100°C
Shelf Storage Temperature (Data Integrity Not Guaranteed)	−65°C to +150°C
Voltage Applied to DET.SUPPLY	14 Volts
Voltage Applied to PULSE.COM	12.6 Volts
Continuous Current between DET.COM and Detector Outputs	10 mA
Coil Current	0.5A D.C.
External Magnetic Field for Non-Volatile Storage	20 Oersteds
Non-Operating Handling Shock (without socket)	200G
Operating Vibration (2 Hz to 2 kHz with socket)	20G

**COMMENT: Stresses above those listed under "Absolute Maximum Ratings" may cause permanent damage to the device. This is a stress rating only and functional operation of the device at these or any other conditions above those indicated in the operational sections of this specification is not implied. Exposure to absolute maximum rating conditions for extended periods may affect device reliability.*

D.C. AND OPERATING CHARACTERISTICS

T_A = 25°C

Symbol	Parameter	Limits			Unit	Test Conditions
		Min.	Nom.[1]	Max.		
R_1	Resistance: PULSE.COM to REP.A or REP.B		20		ohms	
R_2	Resistance: PULSE.COM to BOOT.REP		8		ohms	
R_3	Resistance: PULSE.COM to BOOT.SWAP		17		ohms	
R_4	Resistance: PULSE.COM to GEN.A or GEN.B		32		ohms	
R_5	Resistance: PULSE.COM to SWAP.A or SWAP.B		120		ohms	
R_6	Resistance: DET.COM to DET.OUT.A+ or DET.OUT.B+		640		ohms	
R_7	Resistance: DET.COM to DET.OUT.A− or DET.OUT.B−		670		ohms	
R_8	Resistance: DET.COM to DET.SUPPLY		510		ohms	
R_X	X Coil Resistance		5.2		ohms	
R_Y	Y Coil Resistance		2.7		ohms	
L_X	X Coil Inductance		98.5		μH	
L_Y	Y Coil Inductance		79		μH	

DRIVE REQUIREMENTS

T_A= Range specified in Table 1.

Symbol	Parameter	Min.	Nom.[1]	Max.	Units
f_R	Field Rotation Frequency	49.95	50.00	50.05	KHz
ϕ_L	Phase Lag from Y.COIL to X.COIL	85	90	95	Degrees
I_{PX}	X.COIL Peak Current		600		mA
I_{PY}	Y.COIL Peak Current		750		mA
T_{DX}	X.COIL Positive Turn On Phase		270		Degrees
T_{1X}	X.COIL Positive Turn On Width		108		Degrees
T_{2X}	X.COIL Positive Decay Width		72		Degrees
T_{3X}	X.COIL Negative Turn On Width		108		Degrees
T_{4X}	X.COIL Negative Decay Width		72		Degrees
T_{DY}	Y.COIL Positive Turn On Phase		0		Degrees
T_{1Y}	Y.COIL Positive Turn On Width		108		Degrees
T_{2Y}	Y.COIL Positive Decay Width		72		Degrees
T_{3Y}	Y.COIL Negative Turn On Width		108		Degrees
T_{4Y}	Y.COIL Negative Decay Width		72		Degrees
P_T	Total Coil Power		1.3		Watt

Note: 1. Nominal values are at T_A = 25°C.

CONTROL PULSE REQUIREMENTS

Nominal values at $T_A = 25°C$. See Notes 2 and 3.

Pulse	Amplitude (mA)	Phase of Leading Edge (Degrees)	Width (Degrees)
GEN.A, GEN.B Cut	64	270 (Odd), 90 (Even)	4.5
GEN.A, GEN.B Transfer	36	270 (Odd), 90 (Even)	90
REP.A, REP.B Cut	180	270	4.5
REP.A, REP.B Transfer	140	270	90
SWAP	120	180	517
BOOT.REP Cut	90	270	4.5
BOOT.REP Transfer	70	270	90
BOOT.SWAP	70	180	See Note 4.

Note: 2. Pulse timing is given in terms of the phase relations as shown below. For example, a 7110 operating at $f_R = 50.000$ kHz would have a REP.A transfer width of 90° which is 5 μs.

Table 1. 7110 Family

Part Number	T_A Range
7110 7110-1 7110-2	0-50°C 0-70°C 10-50°C

X-Y COIL WAVEFORMS

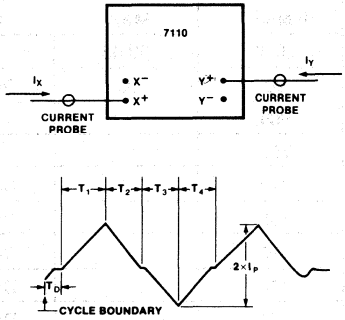

3. Two level pulses are described as shown below.

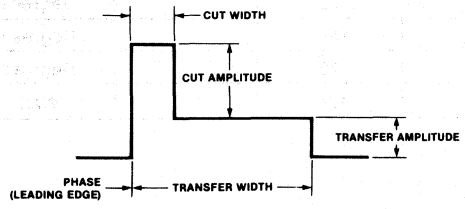

4. BOOT.SWAP is not normally accessed during operation. It is utilized at the factory to write the index address and redundant loop information into the bootstrap loops before shipment.

OUTPUT CHARACTERISTICS

$T_A = 25°C$ unless otherwise specified.

Symbol	Min.	Nom.	Max.	Units	Test Conditions
S_1		6		mV	See Figures
S_0		1		mV	below.

TEST SET-UP FOR OUTPUT VOLTAGE MEASUREMENT

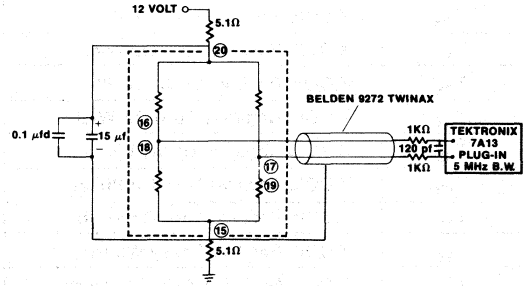

DETECTOR OUTPUT WAVEFORMS

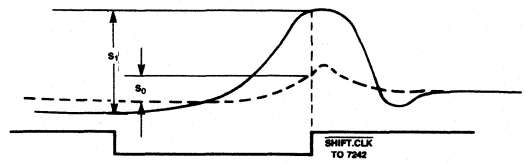

PRELIMINARY

7220-1
BUBBLE MEMORY CONTROLLER

- 8080/8085/8088/8086 Microprocessor Interface
- Interfaces Up to Eight BPK-70 Bubble Storage Subsystems
- Self-Contained Timing
- DMA Handshake Capability
- Single or Multiple Page Block Transfers
- HMOS Technology
- Standard 40-Pin Dual In-Line Package

The Intel® 7220-1 is a complete Bubble Memory Controller (BMC) designed to provide all the interface between Intel Bubble Memories and standard microprocessors such as the 8080, 8085, 8088, and 8086.

The 7220-1 has self-contained timing generation and DMA handshake capability. Single and/or multiple page block transfer capability is supported.

The 7220-1 is capable of interfacing with up to eight BPK 70 one megabit bubble storage subsystems.

The 7220-1 uses Intel's high performance HMOS technology. The 7220-1 is packaged in a standard 40-pin dual in-line package. All inputs and outputs are directly TTL compatible and the device uses a single +5 volt supply.

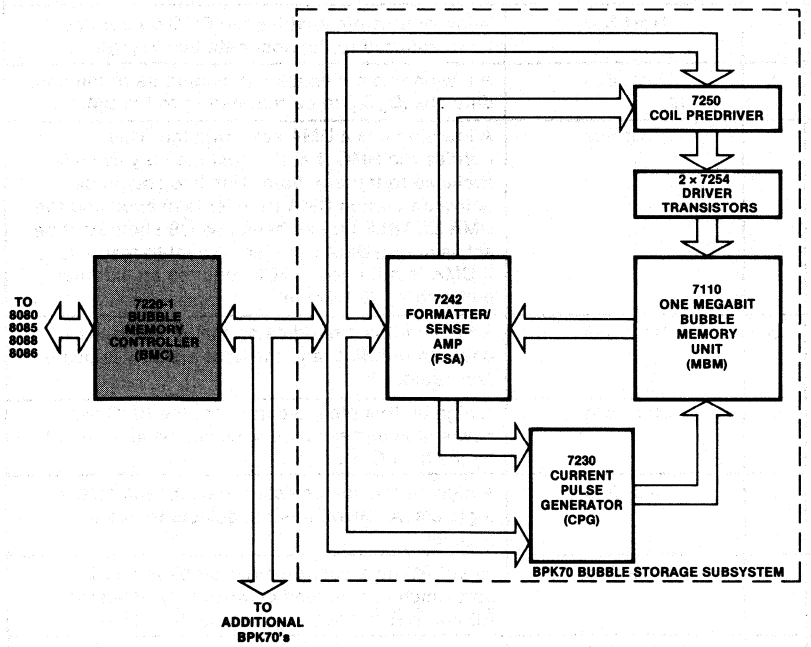

Figure 1. Block Diagram of a 128K Byte Bubble Storage System

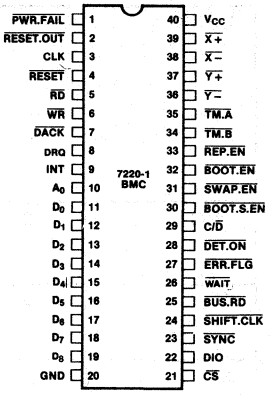

Figure 2. Pin Configuration

Intel Corporation Assumes No Responsibility for the Use of Any Circuitry Other Than Circuitry Embodied in an Intel Product. No Other Circuit Patent Licenses are Implied.
©INTEL CORPORATION, 1981

HARDWARE DESCRIPTION

The 7220-1 Bubble Memory Controller is packaged in a 40-pin Dual In-Line Package (DIP). The following lists the individual pins and describes their function.

Table 1. Pin Description

Signal Name	Pin No.	I/O	Source/Destination	Description
V_{CC}	40	I		+5 VDC Supply
GND	20	I		Ground
$\overline{PWR.FAIL}$	1	I	7230 CPG	A low forces a controlled stop sequence and holds BMC in an IDLE state (similar to $\overline{RESET}$).
$\overline{RESET.OUT}$	2	O	7250 CPD/7242 FSA 7230 Reference Current Switch	An active low signal to disable external logic initiated by $\overline{PWR.FAIL}$ or $\overline{RESET}$ signals, but not active until a stopping point in a field rotation is reached (if the BMC is causing the bubble memory drive field to be rotated).
CLK	3	I	Host Bus	4 MHz, TTL-level clock.
$\overline{RESET}$	4	I	Host Bus	A low on this pin forces the interruption of any BMC sequencer activity, performs a controlled shut-down, and initiates a reset sequence. After the reset sequence is concluded, a low on this pin causes a low on the $\overline{RESET.OUT}$ pin, furthermore, the next BMC sequencer command must be either the Initialize or Abort command; all other commands are ignored.
$\overline{RD}$	5	I	Host Bus	A low on this pin enables the BMC output data to be transferred to the host data bus (D_0-D_8).
$\overline{WR}$	6	I	Host Bus	A low on this pin enables the contents of the host data bus (D_0-D_8) to be transferred to the BMC.
$\overline{DACK}$	7	I	Host Bus	A low signal is a DMA acknowledge. This notifies the BMC that the next memory cycle is available to transfer data. This line should be active only when DMA transfer is desired and the DMA ENABLE bit has been set. $\overline{CS}$ should not be active during DMA transfers except to read status. If DMA is not used, $\overline{DACK}$ requires an external pullup to V_{CC} (5.1K ohm).
DRQ	8	O	Host Bus	A high on this pin indicates that a data transfer between the BMC and the host memory is being requested.
INT	9	O	Host Bus	A high on this pin indicates that the BMC has a new status and requires servicing when enabled by the host CPU.
A_0	10	I	Host Bus	A high on this pin selects the command/status registers. A low on this pin selects the data register.
D_0-D_7	11-18	I/O	Host Bus	Host CPU data bus. An eight-bit bidirectional port which can be read or written by using the $\overline{RD}$ and $\overline{WR}$ strobes. D_0 shall be the LSB.
D_8	19	I/O	Host Bus	Parity bit.

Table 1. Pin Description (Continued)

Signal Name	Pin No.	I/O	Source/Destination	Description
$\overline{CS}$	21	I	Host Bus	Chip Select Input. A high on this pin shall disable the device to all but DMA transfers (i.e., it ignores bus activity and goes into a high impedance state).
DIO	22	I/O	7242 FSA	A bidirectional active high data line that shall be used for serial communications with 7242 FSA devices.
$\overline{SYNC}$	23	O	7242 FSA	An active low output utilized to create time division multiplexing slots in a 7242 FSA chain. It shall also indicate the beginning of a data or command transfer between BMC and 7242 FSA.
$\overline{SHIFT.CLK}$	24	O	7242 FSA	A controller generated clock that initiates data transfer between selected FSAs and their corresponding bubble memory devices. The timing of $\overline{SHIFT.CLK}$ shall vary depending upon whether data is being read or written to the bubble memory.
$\overline{BUS.RD}$	25	O	*	An active low signal that indicates that the DIO line is in the output mode. It shall be used to allow off-board expansion of 7242 FSA devices.
$\overline{WAIT}$	26	I/O	*	A bidirectional pin that shall be tied to the $\overline{WAIT}$ pin on other BMCs when operated in parallel. It shall indicate that an interrupt has been generated and that the other BMCs should halt in synchronization with the interrupting BMC. $\overline{WAIT}$ is an open collector active low signal. Requires an external pullup resistor to V_{CC} (5.1K ohm).
$\overline{ERR.FLG}$	27	I	7242 FSA	An active low input generated externally by 7242 FSA indicating that an error condition exists. It is an open collector input which requires an external pullup resistor (5.1K ohm).
$\overline{DET.ON}$	28	O	*	An active low signal that indicates the system is in the read mode and may be detecting. It is useful for power saving in the MBM.
C/$\overline{D}$	29	O	7242 FSA	A high on this line indicates that the BMC is beginning an FSA command sequence. A low on this line indicates that the BMC is beginning a data transmit or receive sequence.
$\overline{BOOT.SW.EN}$	30	O	7230 CPG	An active low signal which may be used for enabling the BOOT.SWAP of the 7230 CPG.
$\overline{SWAP.EN}$	31	O	7230 CPG	An active low signal used to create the swap function in external circuits.
$\overline{BOOT.EN}$	32	O	7230 CPG	An active low signal enabling the bootstrap loop replicate function in external circuitry.
$\overline{REP.EN}$	33	O	7230 CPG	An active low signal used to enable the replicate function in external circuitry.
$\overline{TM.B}$	34	O	7230 CPG	An active low timing signal generated by the decoder logic for determining TRANSFER pulse width.
$\overline{TM.A}$	35	O	7230 CPG	An active low timing signal generated by the decoder logic for determining CUT pulse width.
$\overline{Y-}$, $\overline{Y+}$, $\overline{X-}$, $\overline{X+}$	36-39	O	7250 CPD	Four active low timing signals generated by the decoding logic and used to create coil drive currents in the bubble memory device.

*Not used in minimum (128K byte) system.

FUNCTIONAL DESCRIPTION

The 7220-1 Bubble Memory Controller provides the user interface to the bubble memory system. The BMC generates all memory system timing and control, maintains memory address information, interprets and executes user request for data transfers, and provides a Microprocessor-Bus compatible interface for the magnetic bubble memory system.

Figure 3 is a block diagram of the 7220-1 Bubble Memory Controller (BMC). The following paragraphs describe the functions of the individual functional sections of the BMC.

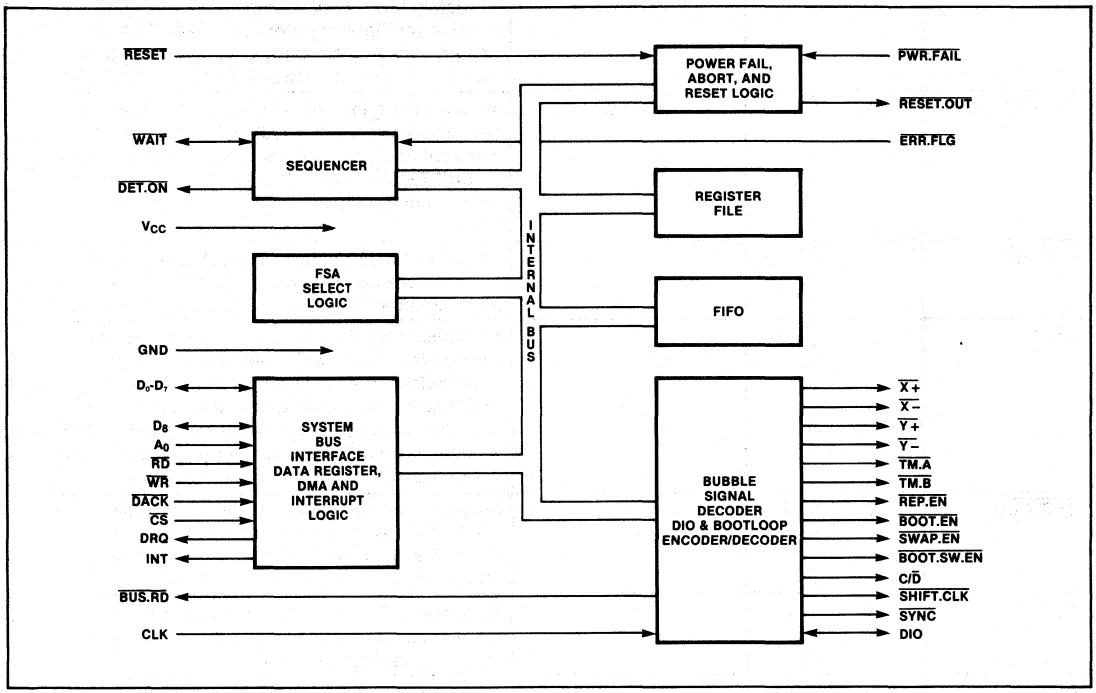

Figure 3. 7220-1 Bubble Memory Controller (BMC), Block Diagram

System Bus Interface—The System Bus Interface (SBI) logic contains the timing and control logic required to interface the BMC to a non-multiplexed bus. The logic also contains the circuitry to check and generate odd parity on transfers across the bus. The interface has input data, output data, and status data latches. The BMC can interface asynchronously to the host CPU. With a 4-MHz clock, it is capable of sustaining a 1.14 Mbyte per second transfer rate, while data is available in the BMC FIFO.

FIFO—The FIFO consists of a 40 x 8 bit FIFO RAM for data storage. The FIFO block also contains input and output data latches, providing double data buffering, to improve the R/W cycle times seen at the system bus interface. The FIFO may be used as a general purpose FIFO when a command is not being executed by the BMC Sequencer. In this mode, the FIFO READY status bit becomes a FIFO not-empty indicator indicating that the RAM and input/output latches have at least one byte of data.

DMA and Interrupt Logic—The DRQ pin has two functions:

(1) If the DMA enable bit in the enable register is set, the DRQ pin, in conjunction with the $\overline{DACK}$ pin, provides a standard DMA transfer capability; i.e., it has the ability to handshake with an 8257 or 9517/8237 DMA controller chip.

(2) If the DMA enable bit is reset, the DRQ pin acts as a "ready for data transfer interrupt" pin. It becomes active when 22 bytes may be read from or written into the BMC; it is reset when this condition no longer exists.

Register File—The register file contains 7 eight-bit registers that are accessible by the host CPU. Refer to the Register Section for details.

MBM Address Logic and RAM—The MBM address logic consists of the block length counter, starting address counter, adder, and MBM Address RAM. The MBM Address RAM is used to store the next available page address for each of up to 8 dual FSAs. The address maintained is the read address; the write address is generated, when needed, by adding a constant to the stored read address.

The block length counter enables multiple page transfers of up to 2048 pages in length.

The starting address counter is used as a register to hold the desired start address. Once the start address is reached, the counter is incremented on each subsequent page transfer so that its value is equal to the present read address.

DIO Bootloop Decoder/Encoder—Performs parallel-to-serial and serial-to-parallel conversions between the FIFO data and the serial bit stream on the DIO line. This block also generates the $\overline{BUS.RD}$ signal, which indicates the direction of data transfer on the DIO line (this is useful in situations which require external buffering on the DIO line). This block also contains the circuitry which decodes the bootloop data during a Read Bootloop or Initialize operation, and encodes the bootloop data during a Write Bootloop operation.

Sequencer—Controls the execution of commands by decoding the contents of its own internal ROM in which the BMC firmware is located. This block also sets and resets flags and status bits, and controls actions in other parts of the BMC.

Power Fail and Reset—Provides a means of resetting the bubble systems in an orderly manner, when activated by the $\overline{PWR.FAIL}$ signal, the $\overline{RESET}$ signal, or the ABORT command. The additive noise on the $\overline{PWR.FAIL}$ pin should be less than 150 mV for proper powerfail operation.

FSA Select Logic block contains the logic which controls the timing of the interaction between the BMC and the FSAs. The FSA selection is determined by the four high-order bits in the BLR and the four high-order bits in the AR, both set by the user.

Bubble Signal Decoder block contains the logic for creating all the MBM timing signals. The BMC to bubble memory interface consists of active low timing signals. The starting and stopping point of each signal is determined by the decoder logic. Each signal may occur every field rotation or only once in a number of field rotations. The field rotation in which a timing pulse occurs is controlled by the sequencer logic.

Figure 4 and Table 2 illustrate the typical timing signals for the BMC. These signals are described in the following paragraphs.

$\overline{X+}$, $\overline{X-}$, $\overline{Y+}$, and $\overline{Y-}$ go to the 7250 CPDs, and are used to enable the coil drive currents in the MBMs.

$\overline{TM.A}$ and $\overline{TM.B}$ go to the 7230 CPGs, and are used to determine, respectively, the pulse widths for the CUT and TRANSFER functions used in replicating and generating the bubbles.

Table 2. 7220-1 BMC Timing (Degrees)

Signal	Start	Width	End
$\overline{X+}$	270°	108°	378°
$\overline{Y+}$	0°	108°	108°
$\overline{X-}$	90°	108°	198°
$\overline{Y-}$	180°	108°	288°
$\overline{TM.A}$ (ODD)	270°	4.5°	274.5°
$\overline{TM.A}$ (EVEN)	90°	4.5°	94.5°
$\overline{TM.B}$ (ODD)	270°	90°	360°
$\overline{TM.B}$ (EVEN)	90°	90°	180°
$\overline{BOOT.EN}$	252°	108°	360°
$\overline{REP.EN}$	252°	108°	360°
$\overline{SWAP.EN}$	180°	5.7°	697°
$\overline{BOOT.SW.EN}$	180°	DC*	180°
$\overline{SHIFTCLK}$ (RD)	186.75°	99°	285.75°
$\overline{SHIFTCLK}$ (WR)	72°	288°	360°

*Stays low for 4118 field rotation periods when writing the MBM Bootloop.

$\overline{SWAP.EN}$, $\overline{REP.EN}$, $\overline{BOOT.SW.EN}$, and $\overline{BOOT.EN}$ all go to the 7230 CPG. They are used to enable, respectively, the data swap, data replicate, boot swap, and boot replicate functions within the MBMs.

$\overline{SHIFT.CLK}$ goes to the FSAs. It is used to control the timing of events at the interface between each FSA and its corresponding MBM. (Refer to 7242 FSA Specification for a description of the BMC/FSA interface.)

$\overline{SYNC}$ and C/$\overline{D}$ control the serial communications between the BMC and the FSAs (on the DIO line).

USER-ACCESSIBLE REGISTERS

The user operates the bubble memory system by reading from or writing to specific registers within the bubble memory controller (BMC). The following paragraphs identify these registers and gives brief functional descriptions, including bit configurations and address assignments.

Register Addressing

Selection of the user-accessible registers depends on register address information sent from the user to the BMC. This address information is sent via a single address line (designated A_0) and data bus lines D_0 through D_4.

Both Command Register (CMDR) and Register Address Counter (RAC) are 4-bit registers which are loaded from D_0-D_3. The status register is selected and read by a single read request. The command register is selected and loaded by a single write request. The remaining registers are accessed indirectly, and the desired register is first selected by placing its address in the RAC, and then read or written with a subsequent read or write request.

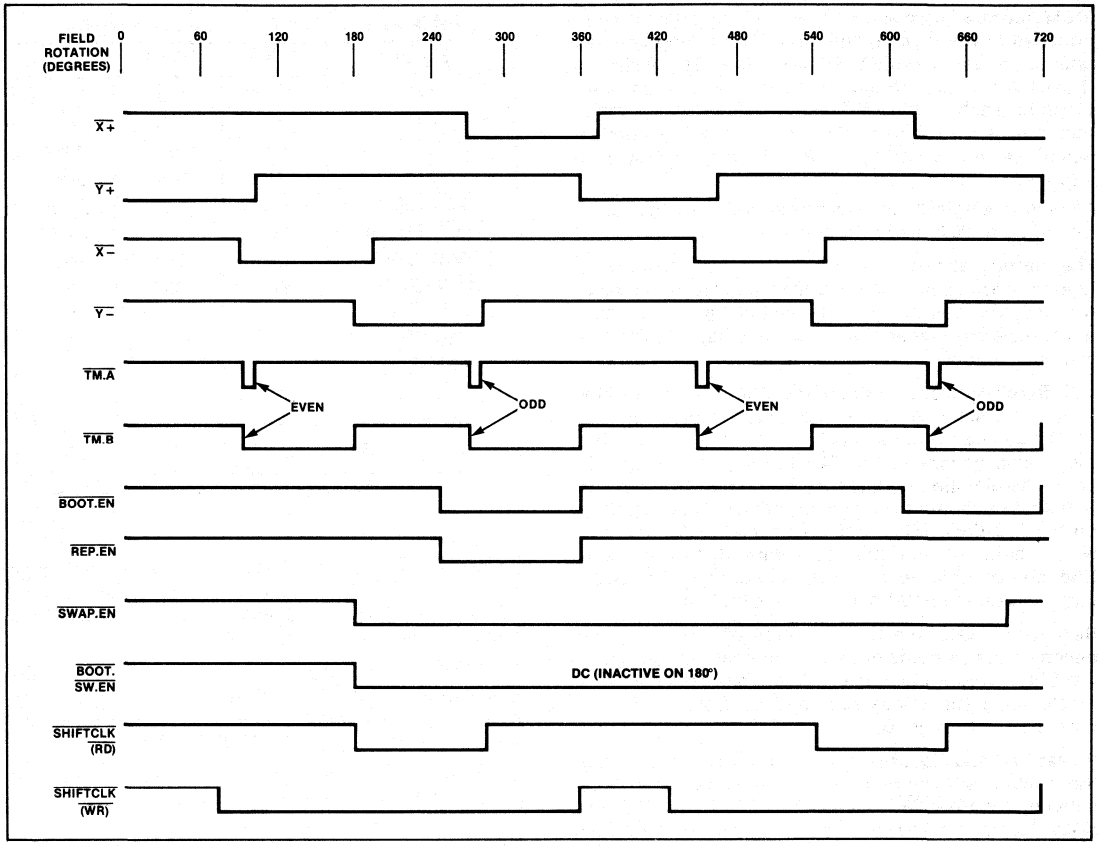

Figure 4. 7220-1 BMC Timing Diagram

Table 3 gives a complete listing of the address assignments for the user-accessible registers. The registers are listed in two groups. The first group (STR, CMDR, RAC) consists of those registers that are selected and accessed in one operation. The second group (UR, BLR, ER, AR, FIFO) consists of those registers that are addressed indirectly by the contents of RAC.

Table 3. Address Assignments for the User-Accessible Registers

A0	D7	D6	D5	D4	D3	D2	D1	D0	Symbol	Name of Register	Read/Write
1	0	0	0	1	C	C	C	C	CMDR	Command Register	Write Only
1	0	0	0	0	B	B	B	B	RAC	Register Address Counter	Write Only
1	S	S	S	S	S	S	S	S	STR	Status Register	Read Only

Table 3. Address Assignments for the User-Accessible Registers (Continued)

RAC							
A0	B3	B2	B1	B0	Symbol	Name of Register	Read/Write
0	1	0	1	0	UR	Utility Register	Read or Write
0	1	0	1	1	BLR LSB	Block Length Register LSB	Write Only
0	1	1	0	0	BLR MSB	Block Length Register MSB	Write Only
0	1	1	0	1	ER	Enable Register	Write Only
0	1	1	1	0	AR LSB	Address Register LSB	Read or Write
0	1	1	1	1	AR MSB	Address Register MSB	Read or Write
0	0	0	0	0	FIFO	FIFO Data Buffer	Read or Write

SSSSSSSS = 8-bit status information returned to the user from the STR
CCCC = 4-bit command code sent to the CMDR by the user.
BBBB = 4-bit register address sent to the RAC by the user.
B3B2B1B0 = 4-bit contents of RAC at the time the user makes a read or write request with A0 = 0.
LSB = Least Significant Byte
MSB = Most Significant Byte

The register file contains the registers with address 1010 through 1111. These registers are also called parametric registers because they contain flags and parameters that determine exactly how the BMC will respond to commands written to the CMDR.

To facilitate such operations, the BMC automatically increments the RAC by one count after each transfer of data to or from a parametric register.

The RAC increments from the initially loaded value through address 1111 and then on to 0000 (the FIFO address). When it has reached 0000, it no longer increments. All subsequent data transfers (with A0 = 0) will be to or from the FIFO until such time as the RAC is loaded with a different register address.

REGISTER DESCRIPTIONS

Command Register (CMDR) 4 Bits, Write Only

The user issues a command to the BMC by writing a 4-bit command code to the CMDR.

Table 4 lists the 4-bit command codes used to issue the sixteen commands recognized by the BMC:

Table 7 is a listing of the commands and their functions.

Table 4. Command Code Definitions

D3	D2	D1	Do	Command Name
0	0	0	0	Write Bootloop Register Masked
0	0	0	1	Initialize
0	0	1	0	Read Bubble Data
0	0	1	1	Write Bubble Data
0	1	0	0	Read Seek
0	1	0	1	Read Bootloop Register
0	1	1	0	Write Bootloop Register
0	1	1	1	Write Bootloop
1	0	0	0	Read FSA Status
1	0	0	1	Abort
1	0	1	0	Write Seek
1	0	1	1	Read Bootloop
1	1	0	0	Read Corrected Data
1	1	0	1	Reset FIFO
1	1	1	0	MBM Purge
1	1	1	1	Software Reset

The most commonly used commands in normal operation are:

Initialize
Read Bubble Data
Write Bubble Data
Reset FIFO
Read Seek
Write Seek
Abort
Read Corrected Data
Software Reset
Read FSA Status
MBM Purge

Commands relating to the bootloop, and used only for diagnostic purposes, are:

Read Bootloop Register
Write Bootloop Register
Write Bootloop Register Masked
Read Bootloop
Write Bootloop

Status Register (STR) 8 Bits, Read Only

The user reads the BMC status register in response to an interrupt signal, or as part of the polling process in a polled data transfer mode. The status register provides information about error conditions, completion or termination of commands, and about the BMC's readiness to transfer data or accept new commands. The individual bit descriptions are as follows:

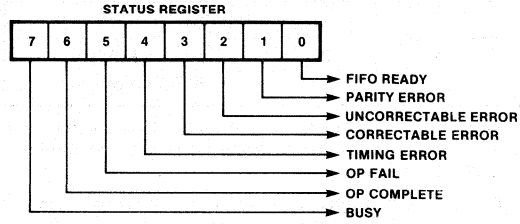

BUSY (when = 1) indicates that the BMC is in the process of executing a command. When equal to 0, BUSY indicates that the BMC is ready to receive a new command. In the case of Read Bubble Data, Read Bootloop, read Bootloop Register, or Read Corrected Data commands, BUSY may also indicate that the data has not been completely removed from the FIFO, and that DRQ is still active. BUSY will then drop as soon as DRQ does (after the user has finished reading the data remaining in the FIFO).

OP COMPLETE (when = 1) indicates the successful completion of a command.

OP FAIL (when = 1) indicates that the BUSY bit has gone inactive with either the TIMING ERROR or UNCORRECTABLE ERROR bits active.

TIMING ERROR (when = 1) indicates that a FSA has reported a timing error to the BMC, or that the host system has failed to keep up with the BMC, thereby causing the BMC FIFO to overflow or to underflow. TIMING ERROR is also set if no bootloop sync word is found during initialization, or if a Write Bootloop command is issued when the WRITE BOOTLOOP ENABLE bit is equal to zero in the enable register.

CORRECTABLE ERROR (when = 1) indicates that a FSA has reported to the BMC that a correctable error has been detected in the last data block transferred.

UNCORRECTABLE ERROR (when = 1) indicates that at least one FSA has reported to the BMC that an uncorrectable error has been detected in the last data block transferred.

PARITY ERROR (when = 1) indicates that the BMC's parity check circuitry has detected a parity error on a data byte sent to the BMC by the user on the data lines D_0-D_8.

FIFO READY has two functions. The FIFO READY functions are as follows:

NOTE: IF RAC ≠ FIFO, FIFO READY = 1

STATUS BITS		READ	WRITE
FIFO READY	BUSY		
1	1	data in FIFO	space in FIFO
0	1	no data	no space
1	0	— data in FIFO —	
0	0	— FIFO empty —	

Although the status word can be read at any time, the status information, bit 1 through 6, is not valid until the BUSY bit is low.

STR Bits 1 through 6 are reset when a new command is issued. They may also be reset by making a write request (WR=0) to the BMC with A_0=1, D_4=0, and D_5=1 (that is, writing the RAC with D_5=1). This operation also resets the "INT" pin to "0". NOTE: A byte of FIFO data can be lost when using this procedure if the RAC is written to other than the FIFO address when data is still present in FIFO.

Enable Register (ER) 8 Bits, Write Only

The user sets various bits of the enable register to enable or disable various functions within the BMC or the FSAs. The individual bit descriptions are as follows:

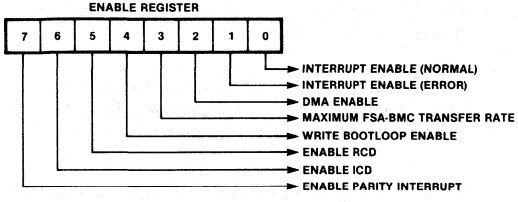

In the above figure and in the text below, the following abbreviations are used:

ICD = INTERNALLY CORRECT DATA
RCD = READ CORRECTED DATA
UCE = UNCORRECTABLE ERROR
CE = CORRECTABLE ERROR
TE = TIMING ERROR

ENABLE PARITY INTERRUPT enables the BMC to interrupt the host system (via the INT line) when the BMC detects a parity error on the data bus lines D_0-D_7.

ENABLE ICD enables the BMC to give the Internally Correct Data command to the FSAs when an error has been detected by the FSA's error detection and correction circuitry. Each FSA responds to such a command by internally cycling the data through its error correction network. When finished, the FSA returns status to the BMC as to whether or not the error is correctable. The value of ENABLE ICD affects the action of INTERRUPT ENABLE (ERROR).

ENABLE RCD enables the BMC to give the Read Corrected Data command to the FSAs when an error has been detected. This causes each FSA to correct the error (if possible) and also to transfer the corrected data to the BMC. The Read Corrected Data command is also used to read into the BMC data previously corrected by the FSA in response to an Internally Correct Data command. In either case, when the data transfer has been completed, the BMC reads each FSA's status to determine whether or not the error was correctable. In the case of an uncorrectable error, bad data may have been sent to the user. The value of ENABLE RCD affects the action of INTERRUPT ENABLE (ERROR).

WRITE BOOTLOOP ENABLE (when = 1) enables the bootloop to be written. If this bit is equal to zero, and a Write Bootloop command is received by the BMC, the command is aborted and the TIMING ERROR bit is set in the STR.

MFBTR controls the maximum burst transfer rate from FSA(s) to BMC FIFO. This rate is variable on the "last page" of a multiple page transfer. (In one page transfers the last page is the only page.) See Table 5 for effects of this bit on the various 7220-1 commands.

Table 5. MFBTR Bit Definitions

Number of MBMs Operated in Parallel	Maximum Required Host Interface Data Rate	MFBTR Bit	
		Read Command	Write Command
1	50K byte/sec	0	N/A
2	100K byte/sec	0	N/A
4	200K byte/sec	0	N/A
8	400K byte/sec	0	N/A
1	12.5K byte/sec	1	0
2	25K byte/sec	1	0
4	50K byte/sec	1	0
8	100K byte/sec	1	0

NOTE: The MFBTR bit should always be set to "0" for all commands except "Read Bubble Data."

DMA ENABLE (when = 1) enables the BMC to operate in DMA data transfer mode, using the DRQ and $\overline{DACK}$ signals in interaction with a DMA controller. When equal to zero, DMA ENABLE sets up the controller to support interrupt driven or polled data transfer.

INTERRUPT ENABLE (ERROR) selects error conditions under which the BMC stops command execution and interrupts the host processor (via the INT line). INTERRUPT ENABLE (ERROR) operates in conjunction with ENABLE ICD and ENABLE RCD.

Enable ICD	Enable RCD	Interrupt Enable (ERROR)	Interrupt Action
0	0	0	No interrupts due to errors
0	0	1	Interrupt on TE only
0	1	0	Interrupt on UCE or TE
0	1	1	Interrupt on UCE, CE, or TE
1	0	0	Interrupt on UCE or TE
1	0	1	Interrupt on UCE, CE, or TE
1	1	0	Not used
1	1	1	Not used

TE = Timing Error, CE = Correctable Error,
UCE = Uncorrectable Error.

INTERRUPT ENABLE (NORMAL) (when = 1) enables the BMC to interrupt the host system (via the INT line), when a command execution has been successfully completed (OP COMPLETE = 1 in the STR).

Utility Register (UR) 8 Bits, Read or Write

The utility register is a general purpose register available to the user in connection with bubble memory system operations. It has no direct effect on the BMC operation, but is provided as a convenience to the user.

Block Length Register (BLR) 16 Bits, Write Only

The contents of the block length register determine the system page size and also the number of pages to be transferred in response to a single bubble data read or write command. The bit configuration is as follows:

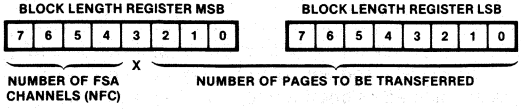

The system page size is proportional to the number of magnetic bubble memory modules (MBMs) operating in parallel during the data read or write operation. Each MBM requires two FSA channels. Bits 4 through 7 of BLR MSB actually specify the number of FSA channels to be accessed.

The BLR LSB, together with the 3 least significant bits of the BLR MSB, specify the number of pages to be transferred. Up to 2048 pages can be transferred in response to a single bubble data read or write command, hence the requirement for 11 bits. All 11 bits equal to zero specifies a 2048 page transfer.

Address Register (AR) 16 Bits, Read or Write

The contents of the address register determine which MBM group is to be accessed, and, within that group, what starting address location shall be used in a data read or write operation. The bit configuration is as follows:

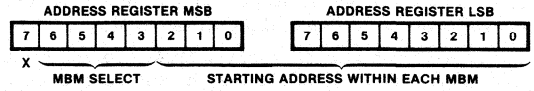

Within each MBM there are 2048 possible starting address locations for a data read or write operation, hence the requirement for 11 bits in the starting address.

The selection of the MBMs to be read or written is specified by AR MSB Bits 3-6. The BMCs interpretation of these bits depends on the number of MBMs in a group, which is specified by BLR MSB Bits 4-7.

Table 6 shows which MBM groups are selected in response to given values for BLR MSB Bits 4-7 and AR MSB Bits 3-6. A 1-megabyte system (8 MBMs) is represented, with the FSA channels numbered 0 through F:

Table 6. Selection of FSA Channels

AR MSB Bits (6,5,4,3)	BLR MSB Bits (7,6,5,4)				
	0000	0001	0010	0100	1000
0000	0	0,1	0,1,2,3	0 to 7	0 to F
0001	1	2,3	4,5,6,7	8 to F	
0010	2	4,5	8,9,A,B		
0011	3	6,7	C,D,E,F		
0100	4	8,9			
0101	5	A,B			
0110	6	C,D			
0111	7	E,F			
1000	8				
1001	9				
1010	A				
1011	B				
1100	C				
1101	D				
1110	E				
1111	F				

The accessing of single FSA channels is done only as part of diagnostic processes. AR MSB Bit 7 is not used.

FIFO Data Buffer (FIFO) 40 x 8 Bits, Read or Write

The BMC FIFO is a 40-byte buffer through which data passes on its way from the FSAs to the user, or from the user to the FSAs. The FIFO allows the data transfer to proceed in an asynchronous and flexible manner, and relaxes timing constraints, both to the FSAs and also to the user's equipment. The user's system must, however, meet the data rate requirements. When the BMC is busy (executing a command) the FIFO functions as a data buffer. When the BMC is not busy, the FIFO is available to the user as a general purpose FIFO.

FUNCTIONAL OPERATION

The IC components used in the bubble memory systems have been designed with transparency in mind—that is, a maximum number of operations are handled by the hardware and firmware of these components.

Each one-Megabit Bubble Memory (MBM) operates in its own domain, and is unaffected by the number of bubble memories in the system. The roles played by the MBM's immediate support circuitry can be described as if the system contained only one MBM module.

Data Flow Within the Magnetic Bubble Memory (MBM) System (Single MBM Systems)

During a read operation, data flows as follows: The data from the MBM is input to the Formatter/Sense Amplifier (FSA). Data from each channel (A channel or B channel) of the MBM goes to the corresponding channel of the FSA. In the FSA, the data is paired up with the corresponding bit in the FSA's bootloop register to determine whether it represents data from a 'good' loop. If it does, the data bit is stored in the FSA FIFO. Error detection and correction (if enabled by the user) is applied to each block of 256 data bits.

From the FSA FIFO, data is sent to the bubble memory controller (BMC) in the form of a serial bit stream, via a one-line bidirectional data bus (DIO). The data is multiplexed onto the DIO line, with data bits coming alternately from the A and B channels of the FSA. The BMC outputs a $\overline{\text{SYNC}}$ pulse to the $\overline{\text{SELECT.IN}}$ input of the FSA. The FSA responds by placing a data bit from the A channel FIFO on the DIO line. One clock cycle later, a data bit from the B channel FIFO is placed on the DIO line. The BMC continues to output $\overline{\text{SYNC}}$ pulses, once every 20 or 80 clock cycles, each time receiving two data bits in return.

In the BMC, the data undergoes serial-to-parallel conversion, and is assembled into bytes, which are then placed in the BMC FIFO, which can hold 40 bytes of data. From this FIFO, the data bytes are written onto the user interface.

During a write operation, the data flow consists of the corresponding operations in the reverse order.

Multiple-MBM Systems

The 7220-1 BMC can interface up to 8 one-megabit BPK70 Bubble Storage subsystems. The data flow in a multiple-BPK70 system is in most respects similar to that which occurs in a one-BKP70 subsystem. The difference is in the time-division multiplexing that occurs on the DIO bus line between the BMC and the FSAs.

For data transfer operations, the BMC may exchange data with as few as two FSA channels (one BPK70) or as many as 16 FSA channels (eight BPK70s).

SOFTWARE INTERFACE—The general procedure for communicating with the BMC is:

Pass parameters to the BMC by loading the registers.

Send the desired command.

Read the status/command register until BMC is not busy (or use "INT" pin).

Examine the status register to determine whether the operation was successful.

Table 7. Detailed Command Descriptions

Initialize	The BMC executes the Initialize command by first interrogating the bubble system to determine how many FSAs are present, then reading and decoding the bootloop from each MBM and storing the results in the corresponding FSA's bootloop register. All the parametric registers must be properly set up before issuing the Initialize command.
Read Bubble Data	The Read Bubble Data command causes data to be read from the MBMs into the BMC FIFO. The selection of the MBMs to be accessed and the starting address for the read operation is specified in the address register (AR). The block length register (BLR) specifies the number of system pages to be read. All the parametric registers must be properly set up before issuing the Read Bubble Data command.
Write Bubble Data	The Write Bubble Data command causes data to be read from the BMC FIFO and written into the MBMs. The selection of the MBMs to be accessed and the starting address for the write operation is specified in the address register (AR). The block length register (BLR) specifies the number of system pages to be written. All the parametric registers must be properly set up before issuing the Write Bubble Data command.
Read Seek	The Read Seek command rotates the selected MBMs to a designated page address location. No data transfer occurs. The positioning is such that the next data location available to be read is the specified (in AR) page address plus one. The Read Seek command may be used to reduce latency (access time) in cases where information is available for the user to predict the location of an impending read reference to the MBMs.

Table 7. Detailed Command Descriptions (Continued)

Write Seek	The Write Seek command rotates the selected MBMs to a designated page address location. No data transfer occurs. The positioning is such that the next data location available to be written is the specified (in AR) page address plus one. The Write Seek command may be used to reduce latency (access time) in cases where information is available for the user to predict the location of an impending write reference to the MBMs.
Abort	The Abort command causes a controlled termination of the command currently being executed by the BMC. The Abort command will be accepted by the BMC (and is typically issued) when the BMC is busy.
MBM Purge	The MBM Purge command clears all BMC registers, counters, and the MBM address RAM. Furthermore, it determines how many FSA channels are present in the system and stores this value in the 7220-1. The "INITIALIZE" command uses this command as a subroutine.
Read Corrected Data	The Read Corrected Data command causes the BMC to read into the BMC FIFO a 256-bit block of data from the FIFO of each selected FSA channel, after an error has been detected. The data cycles through the error correction network of the FSA. After the data has been read, the FSA reports to the BMC whether or not the error was correctable. The Read Corrected Data command is used only when the system is in error correction mode (ENABLE ICD or ENABLE RCD set in the ER).
Software Reset	The Software Reset command clears the BMC FIFO and all registers, except those containing initialization parameters. It also causes the BMC to send the Software Reset command to selected FSAs in the system. No reinitialization is needed after this command.
Read FSA Status	The Read FSA Status command causes the BMC to read the 8-bit status register of all FSAs, and to store this information in the BMC FIFO. The Read FSA Status command is independent all parametric registers.
Read Bootloop Register	The Read Bootloop Register command causes the BMC to read the bootloop register of the selected FSA channels and to store this information in the BMC FIFO. Twenty bytes are transferred for each FSA channel selected.
Write Bootloop Register Masked	Proper operation of the FSAs during data transfer to or from the MBMs requires that the bootloop register contain (if error correction is used) exactly 270 logic 1s for each FSA bootloop register. The user may select any subset of 270 "good" loops from the total number of available loops (if error correction is not used, 270 replaced by 272). As an alternative, the Write Bootloop Register Masked command may be used. This command counts the number of logic 1s and masks out the remaining 1s after the proper count has been reached. The Initialize command uses this command as a subroutine.
Read Bootloop	The Read Bootloop command causes the BMC to read the bootloop from the selected MBM, and to store the decoded bootloop information in the BMC FIFO. The Initialize command uses this command as a subroutine.
Write Bootloop	The Write Bootloop command causes the existing contents of the selected MBM's bootloop to be replaced by new bootloop data based on 40 bytes of information stored in the FIFO (the user must actually write 41 bytes, where the 41st byte is all 0s). Encoding of the bootloop data is done by the BMC hardware.

ABSOLUTE MAXIMUM RATINGS

Temperature under bias . . . . . – 10°C to + 80°C
Storage Temperature . . . . . – 65°C to + 150°C
All Input or Output Voltages and
V_{CC} Supply Voltage . . . . . – 0.5V to 7V

**NOTICE: Stresses above those listed under "Absolute Maximum Ratings" may cause permanent damage to the device. This is a stress rating only and functional operation of the device at these or any other conditions above those indicated in the operational sections of this specification is not implied. Exposure to absolute maximum rating conditions for extended periods may affect device reliability.*

D.C. CHARACTERISTICS (T_A = 0°C to 70°C; V_{CC} = 5.0V +5%, −10%)

Symbol	Parameter	Min.	Max.	Unit	Test Condition
V_{IL}	Input Low Voltage		0.8	V	
$V_{IH(1)}$	Input High Voltage (all but $\overline{PWR.FAIL}$)	2.0		V	
$V_{IH(2)}$	Input High Voltage ($\overline{PWR.FAIL}$)	2.5		V	
$V_{OL(1)}$	Output Low Voltage (All outputs except $\overline{DET.ON}$, $\overline{BUS.RD}$, $\overline{SHIFT.CLK}$, and $\overline{SYNC}$		.45	V	I_{OL} = 3.2 mA
$V_{OL(2)}$	Output Low Voltage $\overline{DET.ON}$, $\overline{BUS.RD}$, $\overline{SHIFT.CLK}$, $\overline{SYNC}$		.45	V	I_{OL} = 1.6 mA
V_{OH}	Output High Voltage	2.4		V	I_{OH} = 400μA
$\|I_{IL}\|$	Input Leakage Current		10	μA	$0 \leq V_{IN} \leq V_{CC}$
$\|I_{OFL}\|$	Output Float Leakage		10	μA	$0.45 \leq V_{OUT} \leq V_{CC}$
I_{CC}	Power Supply Current from V_{CC}		200	mA	

A.C. CHARACTERISTICS

(T_A = 0°C to + 70°C; V_{CC} = 5.0V +5%, −10%; C_L = 150 pF; unless otherwise noted.)

Symbol	Parameter	Min.	Max.	Unit	Test Condition
t_P	Clock Period	249.75	250.25	ns	
t_ϕ	Clock Phase Width (High Time)	.45 t_P	.55 t_P		
t_R-t_F	Input Signal Rise and Fall Time		30	ns	

FSA INTERFACE TIMINGS

Symbol	Parameter	Min.	Max.	Unit	Test Condition
t_{CDV}	CLK to DIO Valid Delay		150	ns	Under Pin Loads*
t_{CDF}	CLK to DIO Entering Float	10	250	ns	Under Pin Loads*
t_{CDE}	CLK to DIO Enabled from Float		150	ns	Under Pin Loads*
t_{CDH}	CLK to DIO Hold Time	10		ns	Under Pin Loads*
t_{CSOL}	CLK to $\overline{SYNC}$ Leading Edge Delay		120	ns	Under Pin Loads*
t_{CSOT}	CLK to $\overline{SYNC}$ Trailing Edge Delay	20	100	ns	Under Pin Loads*
t_{DC}	DIO Setup Time to Clock	80		ns	Under Pin Loads*
t_{DHC}	DIO Hold Time from Clock	0		ns	Under Pin Loads*
t_{COL}	CLK to Output Leading Edge		150	ns	Under Pin Loads*
t_{COT}	CLK to Output Trailing Edge	0	190	ns	Under Pin Loads*
t_{EW}	$\overline{ERR.\ FLG}$ Pulse Width	200		ns	Under Pin Loads*
t_{SCFT}	$\overline{SHIFTCLK}$ to $\overline{Y-}$ Trailing Edge	80	200	ns	Under Pin Loads*

*Final test conditions: TBD.

A.C. CHARACTERISTICS (Continued)

(T_A = 0°C to 70°C; V_{CC} = 5.0 +5%, −10%; C_L = 150 pF; unless otherwise noted.)

READ CYCLE (HOST INTERFACE)

Symbol	Parameter	Min.	Max.	Unit	Test Condition
t_{AC}	Select Setup to $\overline{RD}\downarrow$	0		ns	
t_{CA}	Select Hold from $\overline{RD}\uparrow$	0		ns	
t_{RR}	$\overline{RD}$ Pulse Width	200		ns	
t_{AD}	Data Delay from Address		150	ns	
t_{RD}	Data Delay from $\overline{RD}\downarrow$		150	ns	
t_{DF}	Output Float Delay	10	100	ns	TBD
t_{DC}	DACK Setup to $\overline{RD}\downarrow$	0		ns	
t_{CD}	DACK Hold from $\overline{RD}\uparrow$	0		ns	
t_{KD}	Data Delay from $\overline{DACK}\downarrow$		150	ns	
t_{CYCR}	"Read" Cycle Time	(DMA Mode) $4t_p$-t_ϕ		ns	In non DMA mode. t_{CYCR} Min. = $6t_p$-t_ϕ

WRITE CYCLE (HOST INTERFACE)

Symbol	Parameter	Min.	Max.	Unit	Test Condition
t_{AC}	Select Setup to $\overline{WR}\downarrow$	0		ns	
t_{CA}	Select Hold from $\overline{WR}\uparrow$	0		ns	
t_{WW}	$\overline{WR}$ Pulse Width	200		ns	
t_{DW}	Data Setup to $\overline{WR}\uparrow$	200		ns	
t_{WD}	Data Hold from $\overline{WR}\uparrow$	0		ns	
t_{DC}	$\overline{DACK}$ Setup to $\overline{WR}\downarrow$	0		ns	
t_{CD}	$\overline{DACK}$ Hold from $\overline{WR}\uparrow$	0		ns	
t_{CYCW}	"Write" Cycle Time	$4t_P + t_{ww}$			
t_{CQ}	Request Hold from $\overline{RD}$ or $\overline{WR}$ (Non-Burst Mode)		150	ns	
t_{DEADW}	Inactive Time between $\overline{WR}\uparrow$ and $\overline{WR}\downarrow$	$4t_P$		ns	
t_{DEADR}	Inactive Time between $\overline{RD}\uparrow$ and $\overline{RD}\downarrow$	150			

7250-7230 INTERFACE TIMINGS

Symbol	Parameter	Min.	Max.	Unit	Test Condition
t_{CBL}	CLK to Bubble Signal Leading Edge		250	ns	Under Pin Loads*
t_{CBT}	CLK to Bubble Signal Trailing Edge		250	ns	Under Pin Loads*

*Bubble Pin Loads Shown Below

PIN LOADINGS

Pin Names	Value	Unit
$\overline{X+}$, $\overline{X-}$, $\overline{Y+}$, $\overline{Y-}$	150	pF
$\overline{TM.A}$, $\overline{TM.B}$, $\overline{REP.EN}$, $\overline{BOOT.EN}$, $\overline{SWAP.EN}$, $\overline{BOOT.SW.EN}$, $\overline{C/D}$, $\overline{ERR.FLG}$, $\overline{WAIT}$, $\overline{SYNC}$	50	pF
$\overline{DET.ON}$ & $\overline{SHIFT.CLK}$	100	pF
$\overline{BUS.READ}$	10	pF

WAVEFORMS

READ (HOST INTERFACE)

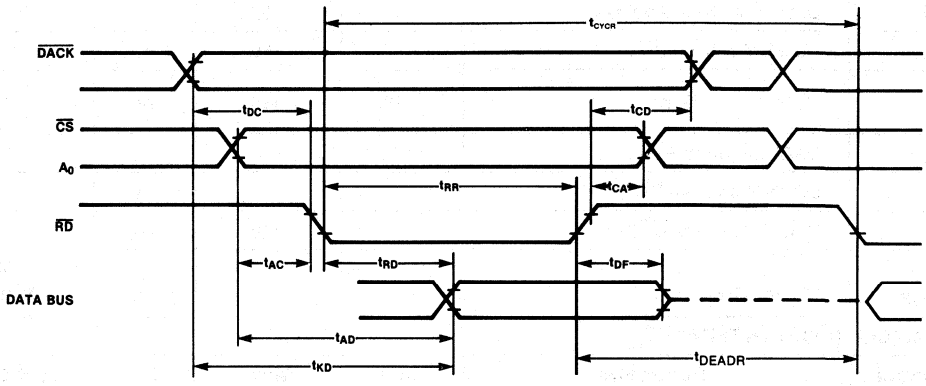

WRITE (HOST INTERFACE)

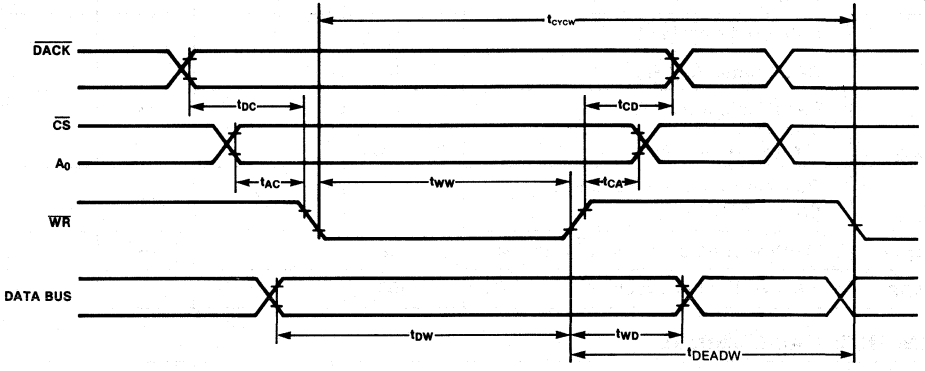

DMA (HOST INTERFACE)

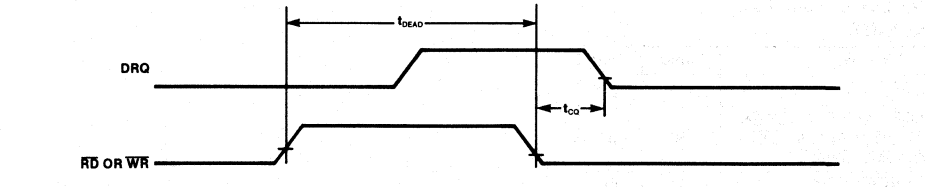

WAVEFORMS (Continued)

7242 INTERFACE TIMINGS

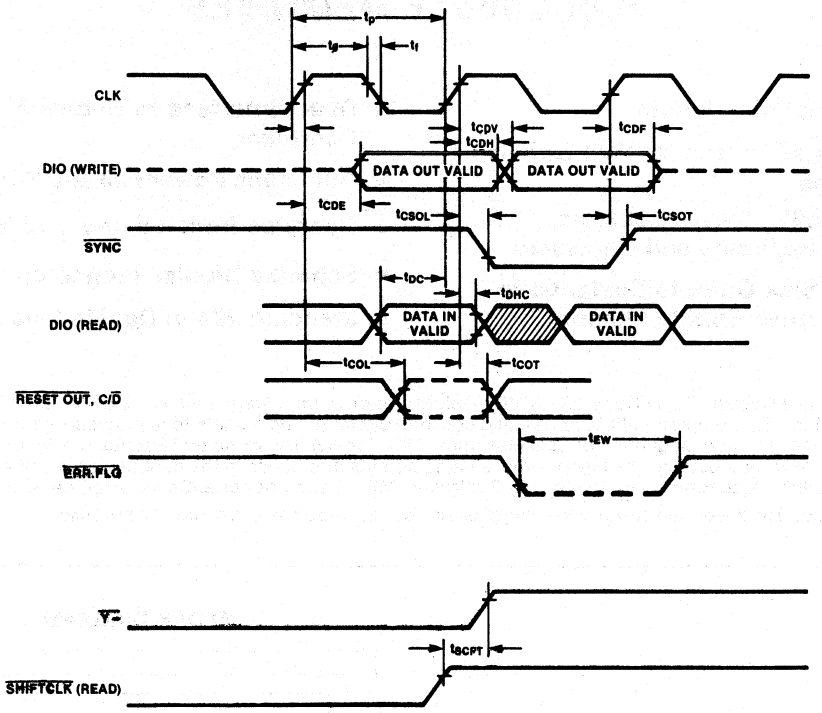

7250 & 7230 INTERFACE TIMINGS

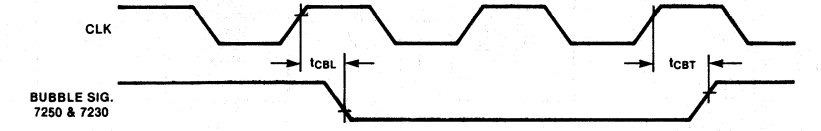

7230
CURRENT PULSE GENERATOR FOR BUBBLE MEMORIES

- **TTL Compatible Inputs**
- **Provides all Pulses for IM's Bubble Memories**
  - **Replicate, Swap, Generate, Boot Replicate and Bootswap**
- **Current Sink Outputs Designed to Directly Drive Bubble Memory**
- **Direct Interface to Bubble Memory Controller**
- **Automatic Power Fail and Reset**
- **Operates from +5 and +12 Volts Only**
- **Schottky Bipolar Technology**
- **Standard 22-Pin Dual-In-Line Package**

The Intel 7230 is a Current Pulse Generator (CPG) designed to drive Intel Magnetics Bubble Memories. The 7230 is a Schottky Bipolar, TTL input compatible device that converts digital timing signals to analog current pulses. The CPG provides all pulses for Intel Magnetics Bubble Memories (7110 Family). These include Replicate, Swap, Generate, Boot Replicate and Bootswap pulses. The high current sinking outputs directly drive the bubble memory. It also directly interfaces to the Intel Magnetics Bubble Memory Controller (7220-1) and Formatter/Sense amplifier (7242).

The 7230 operates from 5-volt and 12-volt power supplies and is in a standard 22-pin dual-in-line package.

PIN CONFIGURATION

BLOCK DIAGRAM

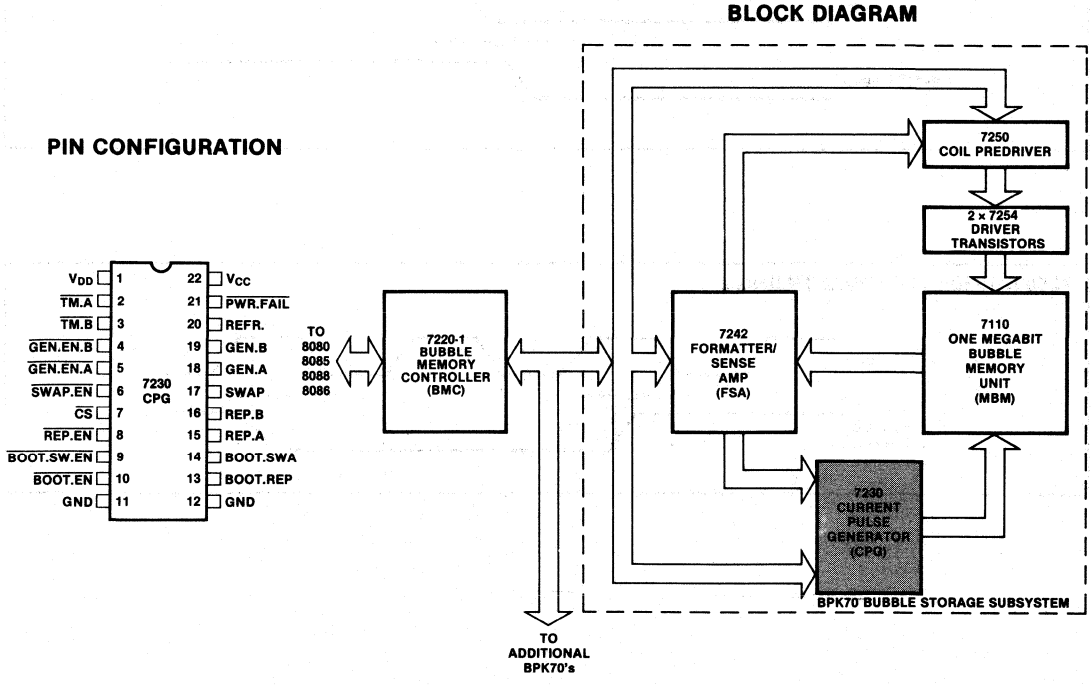

Block Diagram of Single Bubble Memory System — 128K Bytes

LOGIC DIAGRAM

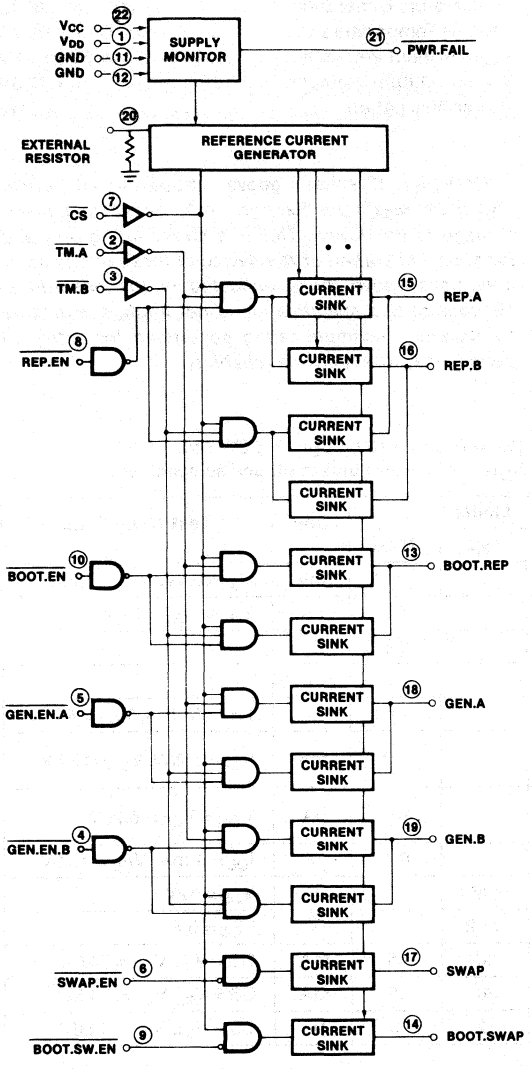

EXTERNAL RESISTOR REQUIREMENTS

Connect a 1% 3.48K ohm resistor based between pin 20 and ground or referenced current switch as outlined in BPK72 User's Manual

PIN DESCRIPTION

$\overline{\text{BOOT.EN}}$ (Pin 10)
An active low input enabling the BOOT.REP output current pulse.

BOOT.REP (Pin 13)
An output providing the current pulse for bootstrap loop replication in the bubble memory.

BOOT.SWAP (Pin 14)
An output providing a current pulse which may be used for writing data into the bootstrap loop.

$\overline{\text{BOOT.SW.EN}}$ (Pin 9)
An active low input enabling the BOOT.SWAP output current pulse.

$\overline{\text{CS}}$ (Pin 7)
An active low input for selecting the chip. The chip powers down during deselect.

GEN.A (Pin 18)
An output providing the current pulse for writing data into the "A" quads of the bubble memory.

GEN.B (Pin 19)
An output providing the current pulse for writing data into the "B" quads of the bubble memory.

$\overline{\text{GEN.EN.A}}$ (Pin 5)
An active low input enabling the GEN.A output current pulse.

$\overline{\text{GEN.EN.B}}$ (Pin 4)
An active low input enabling the GEN.B output current pulse.

$\overline{\text{PWR.FAIL}}$ (Pin 21)
An active low, open collector output indicating that either V_{CC} or V_{DD} is below its threshold value.

REFR. (Pin 20)
The pin for the reference current generator to which an external resistance must be connected.

REP.A (Pin 15)
An output providing the current pulse for replication of data in the "A" quads of the bubble memory.

REP.B (Pin 16)
An output providing the current pulse for replication of data in the "B" quads of the bubble memory.

$\overline{\text{REP.EN}}$ (Pin 8)
An active low input enabling the REP.A and REP.B outputs.

PIN DESCRIPTION (continued)

SWAP (Pin 17)
An output providing the current pulse for exchanging the data between the input track and the storage loops in the bubble memory.

$\overline{\text{SWAP.EN}}$ (Pin 6)
An active low input enabling the SWAP output.

$\overline{\text{TM.A}}$ (Pin 2)
An active low timing signal determining the cut pulse widths of the BOOT.REP, GEN.A, GEN.B, REP.A and REP.B outputs.

$\overline{\text{TM.B}}$ (Pin 3)
An active low timing signal determining the transfer pulse widths of the BOOT.REP, GEN.A, GEN.B, REP.A and REP.B outputs.

ABSOLUTE MAXIMUM RATINGS*

Temperature Under Bias .....−20°C to +80°C
Storage Temperature .....−65°C to +150°C
V_{CC} and Input Voltages .....−0.5V to +7V
V_{DD} and Output Voltages .....− 0.5V to + 12.6V
Power Dissipation 1W

**COMMENT: Stresses above those listed under "Absolute Maximum Ratings" may cause permanent damage to the device. This is a stress rating only and functional operation of the device at these or any other conditions above those indicated in the operational sections of this specification is not implied. Exposure to absolute maximum rating conditions for extended periods may affect device reliability.*

D.C. AND OPERATING CHARACTERISTICS

(T_A = 0°C to +70°C; V_{CC} = 5.0V +5%, −10%; V_{DD} = 12V ±5%; unless otherwise specified)

Symbol	Parameter	Limits			Unit	Test Conditions
		Min.	Typ.	Max.		
I_{IL}	Input Low Current			− 0.4	mA	V_{IL} = 0.4V, V_{CC} = 5.25V
I_{IH}	Input High Current			20	μA	V_{IH} = V_{CC} = 5.25V
V_{IL}	Input Low Voltage			0.8	V	
V_{IH}	Input High Voltage	2.0			V	
V_C	Input Clamp Voltage			− 1.5	V	I = − 18 mA, V_{CC} = 4.75V
I_{CEX1}	Output Leakage Current (All Outputs except $\overline{\text{PWR.FAIL}}$)			1.0	mA	V_{CC}=5.25V, V_{DD}=12.6V
I_{CEX2}	$\overline{\text{PWR.FAIL}}$ Output Leakage Current			100	μA	V_{OH} = V_{CC} = 5.25V
V_{OL}	$\overline{\text{PWR.FAIL}}$ Output Low Voltage			0.4	V	I_{OL} = 4 mA, V_{CC} = 4.75V
V_{CCTH}	V_{CC} Threshold (for $\overline{\text{PWR.FAIL}}$)		4.65		V	V_{DD} = 12V
V_{DDTH}	V_{DD} Threshold (for $\overline{\text{PWR.FAIL}}$)		11.2		V	V_{CC} = 5V
I_{CC1}	Current from V_{CC} — Selected		30	45	mA	CS = V_{IL}, V_{CC} = 5.25V
I_{DD1}	Current from V_{DD} — Selected		20	35	mA	CS = V_{IL}, V_{DD} = 5.25V
I_{DD2}	Current from V_{DD} — Power Down		12	19	mA	CS = V_{IH}, V_{DD} = 12.6V

A.C. CHARACTERISTICS

(T_A = 0°C to +70°C; V_{CC} = 5.0V +5%, −10%; V_{DD} = 12V ±5%; unless otherwise specified)

Symbol	Parameter	Min.	Max.	Unit	Test Conditions*
t_{DON}	Propagation Delay (Turn On)	50	100	ns	
t_{DOFF}	Propagation Delay (Turn Off)	20	50	ns	
t_r	Output Current Rise Time		160	ns	See Test Setup Below
t_f	Output Current Fall Time		20	ns	See Test Setup Below
t_{DIS}	$\overline{\text{CS}}$ Disable Time		50	ns	
t_{EN}	$\overline{\text{CS}}$ Enable Time		500	ns	

*Note: V_{CC} = 4.5V and V_{DD} = 10.8V for all tests.

WAVEFORMS

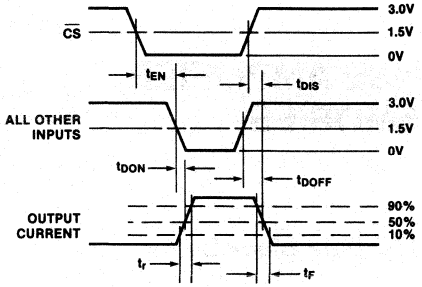

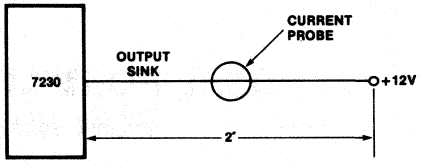

Test Setup for Output Current Rise and Fall Time Measurement

CAPACITANCE*

(T_A = 25°C)

Symbol	Parameter	Typ.	Max.	Unit	Test Conditions*
C_{IN}	Input Capacitance		10	pF	

*This parameter is periodically sampled and not 100% tested. Condition of measurement is f = 1 MHz.

OUTPUT CURRENTS

(T_A = 0°C to 70°C, V_{CC} = 5.0V ±5%, V_{DD} = 12V ±5%)

Output (V_{OUT} = 3.0V)	Nominal Values at 50 KHz	
	Current (mA)	Pulse Width (μs)
REP.A, REP.B CUT	180	0.25
REP.A, REP.B TRANSFER	140	5.0
BOOT.REP CUT	90	0.25
BOOT.REP TRANSFER	70	5.0
GEN.A, GEN.B CUT	64	0.25
GEN.A, GEN.B TRANSFER	36	5.0
SWAP	120	28.75
BOOT.SWAP	70	See Note

Two-level pulses are defined as shown:

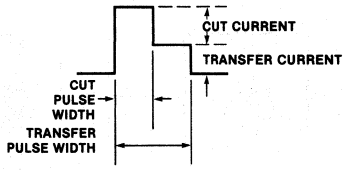

Note: Writing data into the bootstrap loop would require 4096 pulses of 20 μs width.

7242
DUAL FORMATTER/SENSE AMPLIFIER FOR BUBBLE MEMORIES

- **Error Detection/Correction Done Automatically**
- **Dual Channel**
- **On-Chip Sense Amplifiers**
- **Automatically Handles Redundant Loops**
- **FIFO Data Block Buffer**
- **Daisy-Chained Selects for Multiple Bubble Memory Systems**
- **MOS N-Channel Technology**
- **Standard 20-Pin Dual-In-Line Package**

The Intel 7242 is a Dual Formatter/Sense Amplifier (FSA) designed to interface directly with Intel Magnetics Bubble Memories. The 7242 features on-chip sense amplifier for system ease of use and minimization of system part count. The 7242 also provides for automatically handling the bubble memories' redundant loops so they appear transparent to the user. In addition, complete burst error detection and correction can be done automatically by this device.

The 7242 has a full FIFO data block buffer. This device can be daisy-chained for multiple bubble memory systems. Up to eight FSA's can be controlled by one 7220-1 Bubble Memory Controller (BMC).

The 7242 utilizes an advanced NMOS technology to incorporate the on-chip sense amplifiers and other unique features. The device is packaged in a standard high density 20-pin dual-in-line package.

PIN CONFIGURATION

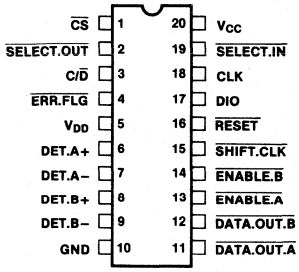

BLOCK DIAGRAM

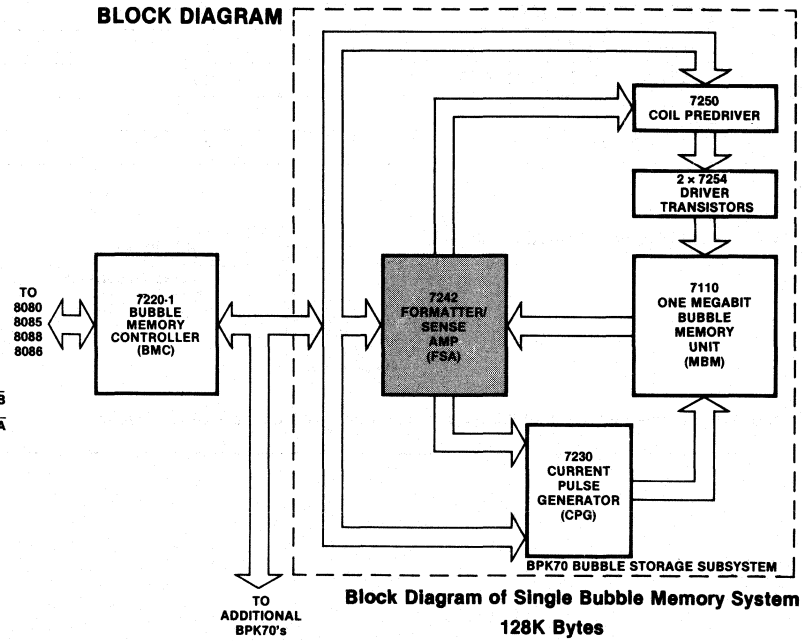

Block Diagram of Single Bubble Memory System 128K Bytes

LOGIC DIAGRAM

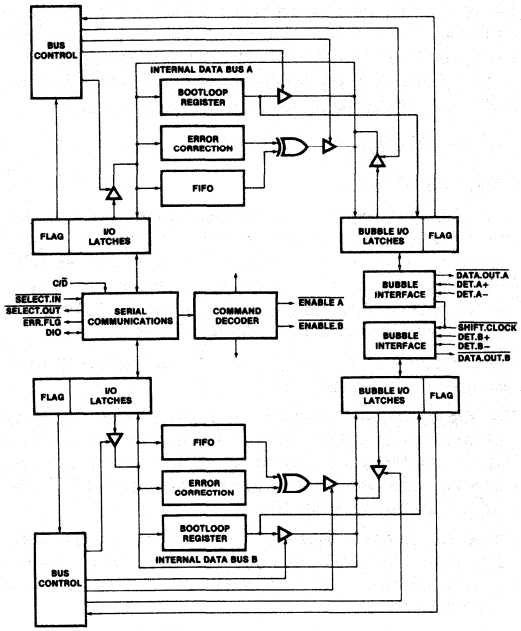

PIN DESCRIPTION

C/$\overline{D}$ (Pin 3)

Command/$\overline{Data}$ signal. This signal shall cause the FSA to enter a receive command mode when high and to interpret the serial data line as data when low. Any previously active command will be immediately terminated by C/$\overline{D}$.

CLK (Pin 18)

Same TTL level clock used to generate internal timing as used for 7220-1.

$\overline{CS}$ (Pin 1)

An active low signal used for multiplexing of FSA's. The FSA is disabled whenever $\overline{CS}$ is high (i.e., it presents a high impedance to the bus and ignores all bus activity.)

$\overline{DATA.OUT.A}$, $\overline{DATA.OUT.B}$ (Pins 11 and 12)

Output data from the FIFO to the MBM generate circuitry. Used to write data into the bubble device (active low).

DET.A+, DET.A–, DET.B+, DET.B– (Pins 6, 7, 8, and 9)

Differential signal lines from the MBM detector.

DIO (Pin 17)

The Serial Bus data line (a bidirectional active high signal).

$\overline{ENABLE.A}$, $\overline{ENABLE.B}$ (Pins 13 and 14)

TTL level outputs utilized as chip selects for other interface circuits. They shall be set and reset by the Command Decoder under instruction of the Controller (active low).

$\overline{ERR.FLG}$ (Pin 4)

An error flag used to interrupt the Controller to indicate that an error condition exists. It shall be an open drain active low signal.

$\overline{RESET}$ (Pin 16)

An active low signal that shall reset all flags and pointers in the FSA as well as disabling the chip as the $\overline{CS}$ signal does. The $\overline{RESET}$ pulse width must be 5 clock periods to assure the FSA is properly reset.

$\overline{SELECT.IN}$ (Pin 19)

An input utilized for time division multiplexing. An active low signal whose presence indicates that the FSA is to send or receive data from the Serial Bus during the next two clock periods.

$\overline{SELECT.OUT}$ (Pin 2)

The $\overline{SELECT.IN}$ pulse delayed by two clocks. It shall be connected to the $\overline{SELECT.IN}$ pin of the next FSA. It is delayed by two clocks because the FSA is a dual channel device. Channel A shall internally pass $\overline{SELECT.IN}$ to Channel B (delayed by one clock).

$\overline{SHIFT.CLK}$ (Pin 15)

A Controller generated clock signal that shall be used to clock data out of the bubble I/O Output Latch to the bubble module during a write operation and to cause bubble signals to be converted by the Sense Amp and clocked into the Bubble I/O Input Latch on a read.

FUNCTIONAL DESCRIPTION

The following is a brief description of each block of the 7242 FSA.

Serial Communications — The Serial Communications block handles all transfers on the Serial Bus and is shared by both channels of the FSA.

Command Decoder — The Command Decoder Interprets commands by the Serial Communication logic and sets the appropriate command and enable lines. It also maintains FSA status, and generates various reset lines.

Internal Data Bus — The Internal Data Bus is the main data link between the Serial Communications block and all other data sources in each half of the FSA.

I/O Latches, Flags, and Bus Control — Each channel of the FSA has its own Internal Data Bus, on which all data transfers are made. There is a Flag and a bidirectional Latch in each "I/O Latches — Flag" block. Only one Latch is used in a given operation and the Flag tells the Bus Controller whether or not the Latch is full. The Bus Controller monitors these flags, and other control signals, to determine when each device should have access to the Internal Data Bus. When a transfer is to be made, the appropriate devices are enabled, the Bus is enabled, and the transfer takes place synchronously by virtue of a transparent State Machine Sequencer.

FIFO — The FIFO is a variable length First-In-First-Out buffer utilized to store data passing to and from the MBM module. The FIFO is logically 272 bits in length in the "no error correction" mode. It is 270 bits in the "error correction" mode, since 256 bits of data and a 14 bit error correction code must be used in this mode of operation.

The FIFO pointers are reset by hardware or software resets or each time a command to read or write is received by the Command Decoder.

If a block length other than 272 bits is used in the no error correction mode, the FIFO pointers will not return to word zero at the end of each block transfer. This is of no consequence if one is not concerned about the absolute location of data in the FIFO. Keeping in mind that the FIFO is only 272 bits physically, any block length may be used up to and including 320.

Bootstrap Loop Register — The Bootstrap Loop Register is a 160-bit register that contains information detailing the location of bad loops in the MBM module. This data will enable bubble I/O to ensure that bits are not loaded in the FIFO from bad loops, or written from the FIFO into bad loops. A logic zero (absence of a bubble) is written into bad loops.

Error Correction Logic — The Error Correction Logic contains the circuitry to implement a burst error correcting code capable of correcting any single burst error of length equal to or less than 5, anywhere in the 270-bit data stream, including the error correction code which is 14 bits in length. A Correction Enable bit may be set or reset via a special command. When reset, the entire error correction network is disabled and block length may vary from 270 bits. Error detection shall be accomplished on all data transfers (when enabled); however, correction cannot take place unless the FSA is operated in a buffered mode (i.e., an entire block is read prior to passing any data to the Controller).

Bubble I/O — The Bubble I/O consists of an integrated Sense Amplifier and an output driver. The Sense Amplifier consists of a sample-and-hold circuit and a differential, chopper stabilized comparator.

Enables — The $\overline{\text{ENABLE.A}}$ and $\overline{\text{ENABLE.B}}$ outputs are utilized as chip selects for external circuitry. To set an ENABLE line, the desired channel of the FSA must be selected and a Read or Write MBM, Set Enable Bit, Initialize, Read Corrected Data, or Internally Correct Data command is sent. Any other command sequence will reset the ENABLE lines.

COMMANDS

FSA Commands

The FSA shall receive a four-bit command word via the Serial Bus. In addition, some of the commands require additional data bits, e.g., status to be passed serially. The four bits shall be interpreted as shown in Table 1. The effects on the Status bits, Correction Enable bit, and Enable pins are summarized in Table 2.

The following is a brief description of each command available in the 7242 FSA.

No Operation — Deselects the chip and prevents further internal activity (default state for reset, unselected or unaddressed channels). Resets the FIFO and Bootloop pointers. The Enable pins ($\overline{\text{ENABLE.A}}$ and $\overline{\text{ENABLE.B}}$) become inactive.

Software Reset — Resets all FIFO and Bootloop pointers and flags. Status flags, Error Correction Enable bit, error correction shift register, and the Enable pins become inactive.

Initialize — The chip is set to read data from the MBM Bootloop and pass it to the Controller. Resets the FIFO and Bootloop pointers and the Error Correction Logic, and disables the Bootloop register (so that it does not interfere with the data flow). The Enable pins become active in addressed channels.

Table 1. Command Code Descriptions

Code	Description	Data	
		Correction Enabled	Not Enabled
0000	No Operation	None	None
0001	(Reserved)	— —	— —
0010	Software Reset	None	None
0011	Initialize	MBM Bootloop	MBM Bootloop
0100	Write MBM Data	270 Bits In	Variable
0101	Read MBM Data	270 Bits Out	Variable
0110	Internally Correct Data	None	— —
0111	Read Corrected Data	270 Bits Out	— —
1000	Write Bootloop Register	160 Bits In	160 Bits In
1001	Read Bootloop Register	160 Bits Out	160 Bits Out
1010	(Reserved)	— —	— —
1011	(Reserved)	— —	— —
1100	Set Enable Bit	None	None
1101	Read $\overline{\text{ERR.FLG}}$ Status	1 Bit Out	1 Bit Out
1110	Set Correction Enable Bit	None	None
1111	Read Status Register	8 Bits Out	8 Bits Out

Table 2. Command Function Summary

Command Description	Command Code	Data Flow (R/W)	Reset FIFO & Bootloop Pointers	Reset Status (Errors)	Reset Error Correction Logic	Enable
No Operation	0000	——	X			H
Software Reset	0010	——	X	X	X	H
Initialize	0011	R	X	X	X	L
Write MBM Data	0100	W	X		X	L
Read MBM Data	0101	R	X		X	L
Internally Correct Data	0110	——	X			L
Read Corrected Data	0111	R	X			L
Write Bootloop Register	1000	W	X			H
Read Bootloop Register	1001	R	X			H
Set Enable Bit	1100	——	X			L
Read $\overline{\text{ERR.FLG}}$ Status	1101	R				H
Set Error Correction Enable Bit	1110	——	X			H
Read Status Register	1111	R		X		H

Write MBM Data — Data input by the Controller is written into the good loops in use in the MBM (under control of the Bootloop register) each time a $\overline{\text{SHIFT.CLK}}$ is received. It also activates the Enable pins and resets the FIFO and Bootloop pointers. If the Correction Enable bit is set, the FSA computes the correction code and appends it to the data stream to be stored in the MBM (last 14 of 270 bits).

Read MBM Data — This command activates the ENABLE pins and resets the FIFO and Bootloop pointers independent of the state of the Correction Enable bit. If the Correction Enable bit is reset, data from the MBM, of block length dictated by 2 times the number of logic "1s" in the Bootloop register, is sensed and screened by the FSA Sense Amp and Bootloop register, and stored in the FIFO. As soon as one bit is guaranteed in the FIFO, simultaneous reading from the FIFO may be done by the Controller. The FIFO need not be emptied after each page is read, but one must insure that more than 272 bits of FIFO are not needed at any time during the transfer.

If the Correction Enable is set, data must be read in a buffered mode. First, a full block of data is read from the MBM. At that point the FIFO contains 270 bits of data. If an error is detected by the Error Correction network, the FSA raises the UNCORR.ERR and CORR.ERR flags which generate an interrupt to the controller. If no error is detected, the 270 bits of data may be read from the FIFO while simultaneously reading and checking the next block of data from the MBM. When an error is detected the Controller may respond to the interrupt in one of three ways.

1. Ignore it and try again (must make sure to reset the Error Correction shift register before a retry).
2. Send a Read Corrected Data command to the FSA. This command will correct the data stream (if possible) and interrupt the Controller when the block has been read. At this time the Controller can send a Read Status command to see if the error was correctable (CORR.ERR) or uncorrectable (UNCORR.ERR).
3. Send an Internally Correct Data command to the FSA. The FSA corrects the data without transferring it to the Controller. When finished, the FSA interrupts the Controller. At this point it can be determined whether or not the error is correctable. If so, a Read Corrected Data command may be sent to read the good data.

Internally Correct Data — Internally cycles the data through the error correction network and returns status as to whether or not the data is correctable.

Requires approximately 1400 clock cycles to complete. $\overline{\text{ERR.FLG}}$ will be inactive during internal cycling, but will return active at its completion. Also activates the ENABLE pins and resets the FIFO and Bootloop pointers.

Read Corrected Data — Cycles data through the error correction network with each Controller read (SELECT.IN at the FSA). At the end of 270 reads, status is available to indicate whether or not the data was successfully corrected. $\overline{\text{ERR.FLG}}$ acts as in Internally Correct Data. This command is required to read data corrected internally as well, but has no effect on the data read if it was successfully corrected. Activates the ENABLE pins and resets the FIFO and Bootloop pointers.

Write Bootloop Register — Contents of the FSA's Bootloop register are written with 160 bits from the Controller. The Controller must read the MBM Bootloop first, to determine which loops are good. The number of good bits in the 160-bit register is 135 if correction is used, and variable up to 160 if operating in the no correction mode. ENABLE pins become inactive and the FIFO and Bootloop pointers are reset.

Read Bootloop Register — As above except that data is read from the FSA Bootloop to the Controller.

Set Enable Bit — ENABLE pins become active for addressed channels, inactive for unaddressed channels. Also resets the FIFO and Bootloop pointers.

Read ERR.FLG Status — Reads the composite error status for addressed channels of the FSA. (The composite status is the logic OR of CORR.ERR, UNCORR.ERR and TIMER.R. The ERR.FLG pin is the logic NOR of both channels' composite error status: ERR.FLG.A and ERR.FLG.B.) ENABLE pins become inactive.

Set Error Correction Enable Bit — Enables the Error Correction Logic in addressed FSAs and disables it in unaddressed FSAs. ENABLE pins become inactive and FIFO and Bootloop pointers are reset. Furthermore, when this enable is set, the corresponding FIFO becomes a 270-bit FIFO (logically) instead of a 272-bit FIFO as in the no correction mode.

Read Status Register — The 8-bit Status Word for the addressed FSA is output to the Controller. Only one FSA channel can be addressed at a time, or bus contention may result. ENABLE pins become inactive and error flags in the addressed FSA channel are reset.

SERIAL INTERFACE

Command Sequence — The FSA communicates with the Controller via a Serial Interface. The Controller/FSA Interface contains the following signals:

1. CLK
2. SELECT.IN (Formatter)
3. SELECT.OUT (Formatter)
4. SYNC (Controller)
5. DIO
6. C/D
7. SHIFT.CLK
8. ERR.FLG

Commands from the Controller to the FSA shall take place in the following format (see Figure 1).

1. Controller raises C/D flag indicating that a command is coming, and simultaneously outputs a SYNC pulse. This SYNC pulse is shifted down the FSA chain in shift register fashion via the FSA SELECT.IN/SELECT.OUT lines.
2. Controller outputs a serial data stream on the DIO line beginning in the clock period following SYNC. Each bit in the stream corresponds to an address bit for a particular FSA (up to 16 channels). Each FSA, upon receiving SELECT.IN, will look for the presence or absence of a logic one on DIO in the clock period following receipt of SELECT.IN. (A logic one indicates that the FSA shall accept the command.)
3. Twenty clock periods after the first SYNC, the Controller sends C/D low followed by a four-bit command on the DIO line.
4. If the command is a Read Status command (1111), the addressed FSA returns 8 bits of Status starting 4 clock periods after the last command bit is received. Note that the Status is returned during this period for any FSA position. Therefore only one FSA channel should be addressed at a time to avoid contention.
5. If the command requires further data (see section on FSA Commands), more SYNC pulses are sent by the Controller. This will occur at integral multiples of 80 or 20 clock periods starting no sooner than 40 clocks after the first command SYNC pulse. Some number of SYNC periods may pass before the second SYNC to allow the FSA to set itself up and get data ready for the Controller. There are several possibilities:
   a. For the Read ERR.FLG Status command the second SYNC can occur 40 clocks after the first SYNC. This SYNC (or SELECT.IN) causes each addressed FSA to send the appropriate Status information. No further SYNCs (without C/D high) should be sent.

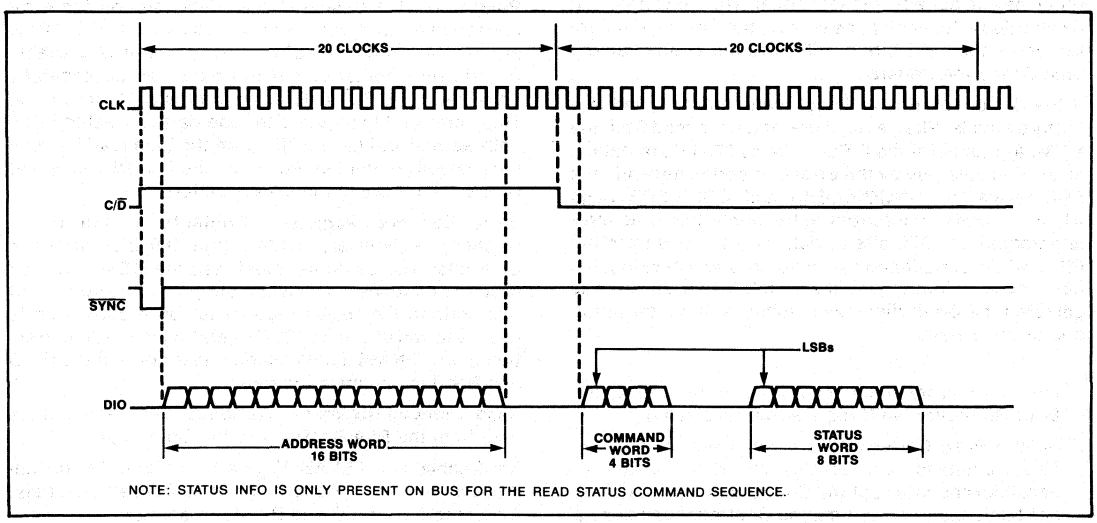

Figure 1. Command Sequences

b. For the Read MBM Data (or Initialize) command the second $\overline{SYNC}$ must wait the appropriate number of $\overline{SHIFT.CLOCKs}$ to assure that valid data is available in the FIFO.

After this wait, each addressed FSA channel sends one bit of data on the DIO line for each $\overline{SYNC}$ (or $\overline{SELECT.IN}$) pulse.

c. For the Read Bootloop Register command, the second $\overline{SYNC}$ can occur 60 clock cycles after the first $\overline{SYNC}$. The data transfer then proceeds as in b. above.

d. For the Write MBM Data or Write Bootloop commands, the DIO line is used to transfer data to the FSA on successive SYNC pulses. The first data bit can be transferred by a second $\overline{SYNC}$ pulse, 40 clock cycles after the first $\overline{SYNC}$. (However, data to the MBM will not be available at the Dataout pins until 40 clock cycles after the $\overline{SYNC}$ which transferred it.) Each transfer to the addressed FSA will be initiated by a $\overline{SYNC}$ (or $\overline{SELECT.IN}$).

6. $\overline{SYNC}$ ($\overline{SELECT.IN}$) precedes the data it transfers by 1 clock cycle. Data Transfers to or from the FSA's FIFO must contain the proper number of $\overline{SYNC}$s (externally counted) or a timing error may occur ($\overline{TIMERR}$ flag will be set, causing an interrupt to the Controller).

Data Sequences — Bubble data shall be passed between the Controller and FSAs in the following fashion (see Figure 2).

1. Controller outputs a $\overline{SYNC}$ pulse.
2. Each FSA then outputs (inputs) a single bit on DIO after $\overline{SYNC}$ ($\overline{SELECT.IN}$) has been clocked into its control section. Only previously enabled FSAs output (input) data and the Controller must know when to input (output) data bits.
3. After 80 or 20 clocks, another $\overline{SYNC}$ pulse is output and the sequence repeats until all data has been transferred.

Error Conditions — Each FSA shall upon detection of an error set a Status bit and pull down $\overline{ERR.FLG}$. This signal can be asynchronous to $\overline{SYNC}$. Error Status bits shall be:

1. Correctable Error
2. Uncorrectable Error
3. Timing Error

The Status Word that shall be passed to the Controller after receipt of a Read Status command shall be in the following format:

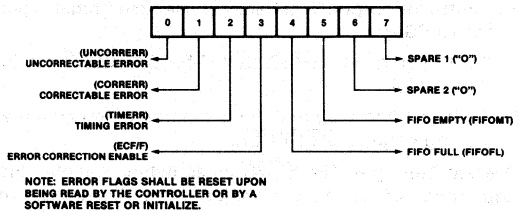

NOTE: ERROR FLAGS SHALL BE RESET UPON BEING READ BY THE CONTROLLER OR BY A SOFTWARE RESET OR INITIALIZE.

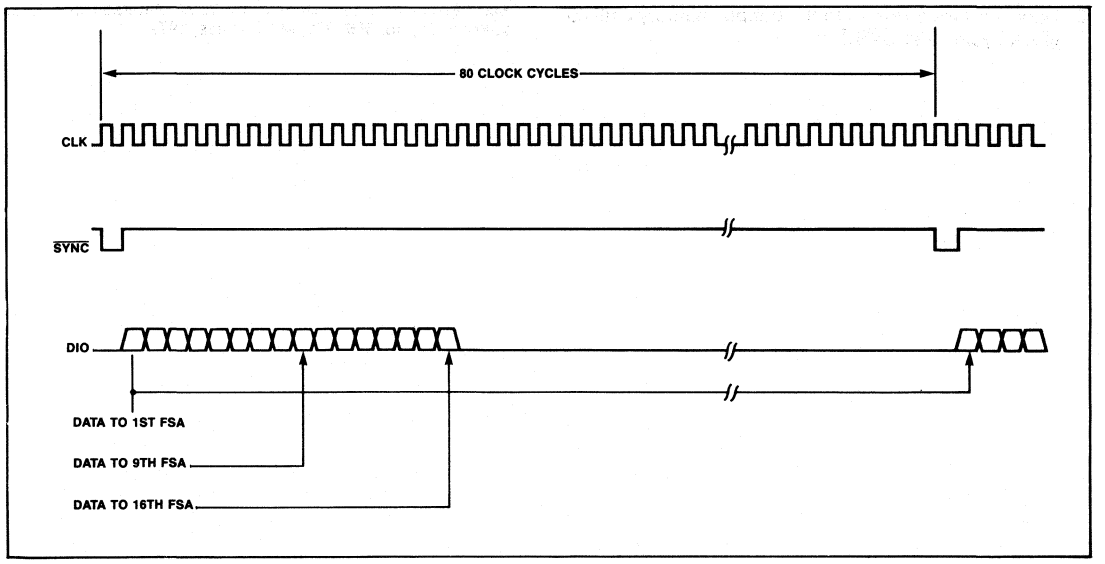

Figure 2. Data Sequences

BUBBLE INTERFACE

Bubble Interface — Each Bubble Interface shall consist of a DATAOUT signal and a pair of differential inputs from the MBM detector bridge.

Read Timing — The timing for reading a bit from the memory shall be as follows:

1. Controller outputs a $\overline{\text{SHIFT.CLK}}$. FSA samples bubble signal during $\overline{\text{SHIFT.CLK}}$ and holds signal after trailing edge.
2. Trailing edge of $\overline{\text{SHIFT.CLK}}$ initiates signal conversion timing.
3. Data is latched at end of conversion period in the Bubble Input latch, and will subsequently be loaded into the FIFO.

Write Timing — The timing for writing a bit from the FIFO shall be as follows:

1. Controller lowers $\overline{\text{SHIFT.CLK}}$.
2. Data is gated out of FSA by $\overline{\text{SHIFT.CLK}}$.
3. Controller outputs a generate pulse (to external logic; not to FSA).
4. Controller raises $\overline{\text{SHIFT.CLK}}$. The $\overline{\text{DATA.OUT}}$ pin is forced high.
5. FIFO and Bootloop register are incremented after the leading edge of $\overline{\text{SHIFT.CLK}}$.

System Timing — The $\overline{\text{SYNC}}$ pulse (which denotes the beginning of a data transfer from Controller to Formatter or vice-versa) shall be synchronous with the beginning of a bubble memory field rotation. Due to timing constraints in the FSA, the following statements hold:

1. Data read from the bubble memory into the FSA shall not be available to the Controller until 40 clock cycles after $\overline{\text{SHIFT.CLK}}$.
2. Data cannot be written to the bubble memory until 40 clock cycles afer $\overline{\text{SYNC}}$.

FSA ERROR CORRECTION

Error Correction — The error correction logic consists of a burst error correcting Fire code capable of correcting 5 or fewer bits in a single burst; the number of check bits is 14.* Error correction/detection shall take place on each 256-bit data block. The FSA shall set low $\overline{\text{ERR.FLG}}$ each time a correctable or uncorrectable error is detected. $\overline{\text{ERR.FLG}}$ shall be set high upon being read by the Controller or by a software reset being issued. The polynomial implemented is given below:

$$G(X) = 1 + X^2 + X^5 + X^9 + X^{11} + X^{14}$$

DATA FORMAT

Data Format—Data into a single FSA channel from the bubble memory shall be in the format described below. The two channels of the bubble are represented identically. The following definitions apply:

o_η = data from odd half of bubble device, loop η

e_η = data from even half of bubble device, loop η

Data Block Format —

$$o_1e_1o_1e_1o_2e_2o_2e_2 \ldots o_{80}e_{80}o_{80}e_{80}$$

1st bit 320th bit

When using correction, the first 270 good bits will be used; the last 14 of these are to be used for the error correcting code. The remaining 50 bits must be masked as "bad" bits in the FSA Bootloop register.

When operating without correction, any number of bits may be used by loading the Bootloop register appropriately. The preferred number is 272 bits, however.

*See "Error-Correcting Codes" by W.W. Peterson and E. J. Weldon, Jr., pp. 366-370, M.I.T. Press, 1972.

ABSOLUTE MAXIMUM RATINGS*

Temperature Under Bias ..... −10°C to +80°C
Storage Temperature ..... −65°C to +150°C
All Input or Output Voltages and
V_{CC} Supply Voltage ..... −0.5V to +7V
V_{DD} Supply Voltage ..... −0.5V to +14V
Power Dissipation 1W

**COMMENT: Stresses above those listed under "Absolute Maximum Ratings" may cause permanent damage to the device. This is a stress rating only and functional operation of the device at these or any other conditions above those indicated in the operational sections of this specification is not implied. Exposure to absolute maximum rating conditions for extended periods may affect device reliability.*

D.C. AND OPERATING CHARACTERISTICS (T_A = 0°C to 70°C; V_{CC} = 5.0V +5%, −10%; V_{DD} = 12V ±5%)

Symbol	Parameter	Limits			Unit	Test Conditions
		Min.	Typ.	Max.		
V_{IL}	Input Low Voltage	−0.5		0.8	V	
V_{IH}	Input High Voltage	2.0		V_{CC} + 0.5	V	
V_{OL}	Output Low Voltage (All Outputs Except $\overline{\text{SELECT.OUT}}$)			0.45	V	I_{OL} = 3.2 mA
V_{OLSO}	Output Low Voltage ($\overline{\text{SELECT.OUT}}$)			0.45	V	I_{OL} = 1.6 mA
V_{OH}	Output High Voltage (All Outputs Except $\overline{\text{SELECT.OUT}}$)	2.4			V	I_{OH} = 400 μA
V_{OHSO}	Output High Voltage ($\overline{\text{SELECT.OUT}}$)	2.4			V	I_{OH} = 200 μA
V_{THR}	Detector Threshold	2.0		3.0	mV	V_{DD} = 12.0V
$\|I_{IL}\|$	Input Leakage Current			10	μA	$0 \leq V_{IN} \leq V_{CC}$
$\|I_{OFL}\|$	Output Float Leakage			10	μA	$0.45 \leq V_{OUT} \leq V_{CC}$
I_{CC}	Power Supply Current from V_{CC}			120	mA	
I_{DD}	Power Supply Current from V_{DD}			30	mA	

A.C. CHARACTERISTICS (T_A = 0°C to +70°C; V_{CC} = 5.0V +5%, −10%; V_{DD} = 12V ±5%; C_L = 120 pF; unless otherwise noted)

Symbol	Parameter	Min.	Max.	Unit	Test Conditions
t_p	Clock Period	240	500	ns	
t_ϕ	Clock Phase Width	0.4 t_p	0.6 t_p		
t_r, t_f	Clock Rise and Fall Time		30	ns	
t_{SIC}	$\overline{\text{SELECT.IN}}$ Setup Time to CLK	50		ns	
t_{CDC}	C/$\overline{\text{D}}$ Setup Time to CLK	50		ns	
t_{CYC}	$\overline{\text{SELECT.IN}}$ or $\overline{\text{SHIFT.CLK}}$ Cycle Time	20 t_p			
t_{DC}	DIO Setup Time to Clock (Read Mode)	50		ns	
t_{CSC}	$\overline{\text{CS}}$ Setup Time to CLK	100		ns	
t_{RIC}	$\overline{\text{RESET.IN}}$ Setup Time to CLK	100		ns	
t_{IH}	Control Input Hold Time for C/$\overline{\text{D}}$, $\overline{\text{SELECT.IN}}$ and DIO	20		ns	
t_{CSOL}	CLK to $\overline{\text{SELECT.OUT}}$ Leading Edge Delay		100	ns	C_L = 50 pF
t_{CSOT}	CLK to $\overline{\text{SELECT.OUT}}$ Trailing Edge Delay		100	ns	C_L = 50 pF
t_{CDV}	CLK to DIO Valid Delay*		100	ns	
t_{CDH}	CLK to DIO Hold Time*	0		ns	
t_{CDE}	CLK to DIO Enabled from Float*		100	ns	
t_{SIDE}	$\overline{\text{SELECT.IN}}$ Trailing Edge to DIO Enabled from Float*		70	ns	
t_{CDF}	CLK to DIO Entering Float*		100	ns	
t_{SCDO}	$\overline{\text{SHIFT.CLK}}$ to DATAOUT Delay*		200	ns	
t_{SCWR}	$\overline{\text{SHIFT.CLK}}$ Width (Read)	4 t_p	t_{CYC} − 11 t_p		
t_{SCWW}	$\overline{\text{SHIFT.CLK}}$ Width (Write)	t_p	t_{CYC} − 2 t_p		

CAPACITANCE

(T_A = 25°C, V_{CC} = 0V, f = 1 MHz)

Symbol	Parameter	Typ.	Max.	Unit	Test Conditions
C_{IN}	Input Capacitance		10	pF	
C_{OUT}	Output Capacitance		10	pF	
C_{DIO}	DIO Capacitance		10	pF	

*DIO Write Mode.

A.C. TESTING INPUT, OUTPUT WAVEFORM

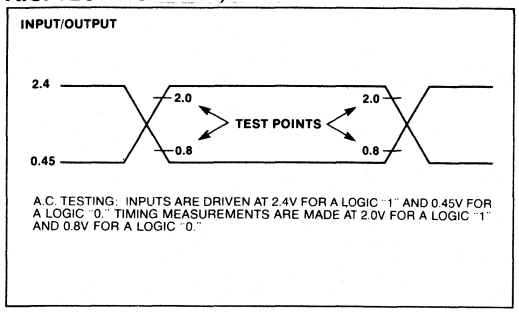

A.C. TESTING: INPUTS ARE DRIVEN AT 2.4V FOR A LOGIC "1" AND 0.45V FOR A LOGIC "0." TIMING MEASUREMENTS ARE MADE AT 2.0V FOR A LOGIC "1" AND 0.8V FOR A LOGIC "0."

DIO INTERFACE TIMING

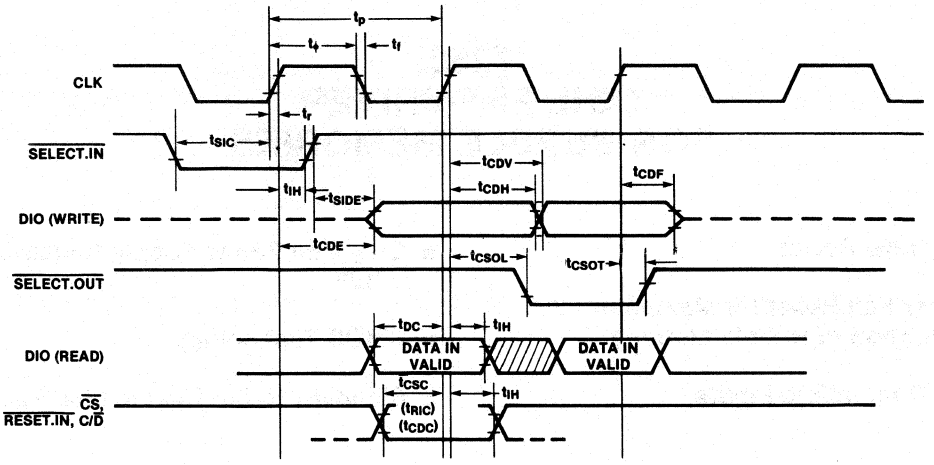

BUBBLE DATA INTERFACE TIMING

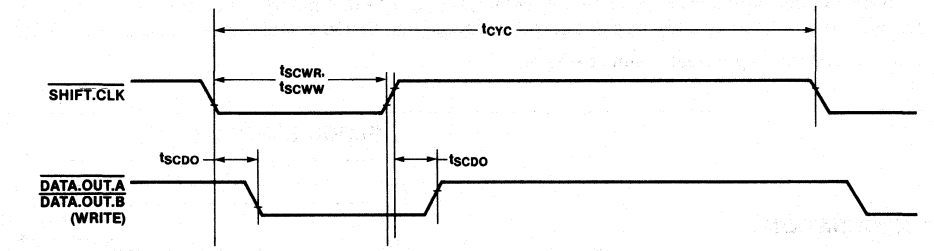

7250
COIL PRE-DRIVER
FOR BUBBLE MEMORIES

- **Very Low Power**
- **Power Fail Reset for Maximum Protection of Bubble Memory**
- **TTL Compatible Inputs**
- **Only One Power Supply Required, +12V**
- **CMOS Technology**
- **Standard 16-Pin Dual In-Line Package**

The Intel 7250 is a low power Coil Pre-Driver (CPD) for use with Intel Magnetics Bubble Memories. The 7250 is controlled by the Intel 7220-1 Bubble Memory Controller (BMC) and directly drives either Quad VMOS transistor packs or Quad Bipolar transistor packs which are connected to the coils of the bubble memory.

The 7250 is a high voltage, high current driver constructed using CMOS technology. The device has TTL compatible inputs and the outputs are designed to drive either low on-resistance VMOS transistors or bipolar transistors.

The 7250 is in a standard 16-pin dual in-line package.

PIN CONFIGURATION

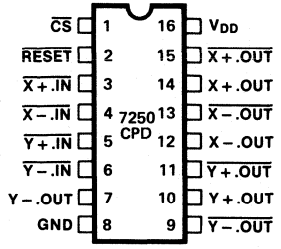

BLOCK DIAGRAM

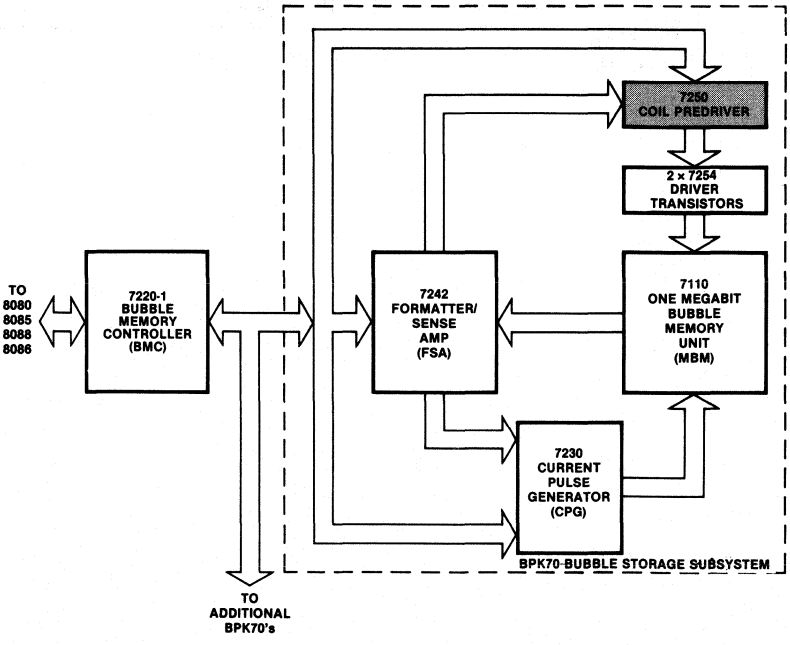

Block Diagram of Single Bubble Memory System — 128K Bytes

ABSOLUTE MAXIMUM RATINGS*

Ambient Temperature Under Bias . . . – 20°C to + 80°C
Storage Temperature . . . . . – 65°C to + 150°C
Voltage on Any Pin with
Respect to Ground . . . . . – 0.5 to V_{DD} + 0.5V
Supply Voltage, V_{DD} . . . . . – 0.5 to + 14V
Output Current . . . . . 250 mA
(One Output @ 100% Duty Cycle)

*COMMENT: Stresses above those listed under "Absolute Maximum Ratings" may cause permanent damage to the device. This is a stress rating only and functional operation of the device at these or any other conditions above those indicated in the operational sections of this specification is not implied. Exposure to absolute maximum rating conditions for extended periods may affect device reliability.

D.C. AND OPERATING CHARACTERISTICS

(T_A = 0°C to +70°C; V_{DD} = 12V +5%, −10%; unless otherwise specified)

Symbol	Parameter	Limits			Unit	Test Conditions
		Min.	Typ.	Max.		
$\|I_{IN}\|$	Input Current			10	μA	V_I = 0.8V
V_{IL}	Low Level Input Voltage			0.8	V	
V_{IH}	High Level Input Voltage	2.2			V	
V_{OL1}	Output Low Voltage			2.0	V	I_{OL} = 200 mA
V_{OL2}	Output Low Voltage			0.2	V	I_{OL} = 10 mA
V_{OH1}	Output High Voltage	V_{DD}-2			V	I_{OH} = − 200 mA
V_{OH2}	Output High Voltage	V_{DD}-0.2			V	I_{OH} = − 10 mA
I_{OL}	Output Sink Current	200			mA	V_{OL} = 2.0V, 30% Duty Cycle
$\|I_{OH}\|$	Output Source Current	200			mA	V_{OH} = V_{DD}-2.0V, 30% Duty Cycle
I_{DD0}	Supply Current			4.5	mA	Chip Deselected: $\overline{CS}$ = V_{IH}, V_{DD} = 12.6V
I_{DD1}	Supply Current			75	mA	f = 100 kHz, V_{DD} = 12.6V, Outputs Unloaded

A.C. CHARACTERISTICS

(T_A = 0°C to 70°C, V_{DD} = 12V ±5%, unless otherwise specified)

Symbol	Parameter	Min.	Typ.	Max.	Unit	Test Conditions
t_{p1}	Propagation Delay from $\overline{X+}$.IN, $\overline{X-}$.IN, $\overline{Y+}$.IN, $\overline{Y-}$.IN			100	ns	500 pF Load
t_{p2}	Propagation Delay from $\overline{CS}$ or $\overline{RESET}$			150	ns	500 pF Load
t_r	Rise Time (10% to 90%)			45	ns	500 pF Load
t_F	Fall Time (90% to 10%)			45	ns	500 pF Load
t_S	Skew Between an Output and its Complement			20	ns	

A.C. TEST CONDITIONS

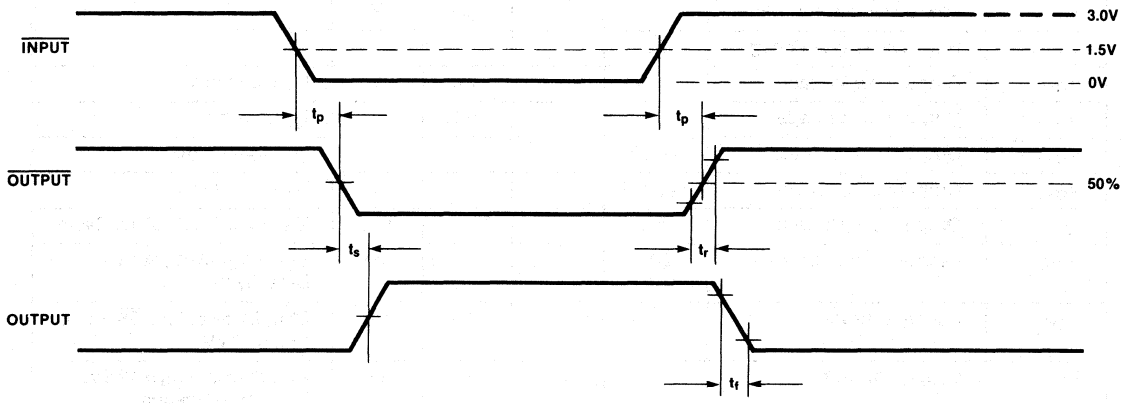

CAPACITANCE* (T_A = 25°C, V_{DD} = 0V, V_{BIAS} = 2V, f = 1 MHz)

Symbol	Parameter	Min.	Typ.	Max.	Unit	Test Conditions
C_{IN}	Input Capacitance			10	pF	

*This parameter is periodically sampled and is not 100% tested.

PIN DESCRIPTION

$\overline{CS}$ (Pin 1)
Chip select. It is active low. When high chip is deselected and I_{DD} is significantly reduced.

$\overline{RESET}$ (Pin 2)
Active low Input from RESET.OUT of 7220-1 Controller forces 7250 outputs inactive so that bubble memory is protected in the event of power supply failure.

$\overline{X+IN}$, $\overline{.X-.IN}$ (Pins 3, 4)
Active low inputs from controller which turn on the high current X outputs.

X – .OUT, $\overline{X-.OUT}$, $\overline{X+.OUT}$, X + .OUT (Pins 12-15)
High current outputs and their complements for driving the gates of the 7254 VMOS quad transistors which in turn drive the X coils of the bubble memory.

$\overline{Y+.IN}$, $\overline{Y-.IN}$ (Pins 5, 6)
Active low inputs from controller which turn on the high current Y outputs.

$\overline{Y-.OUT}$, Y + .OUT, $\overline{Y+.OUT}$, Y – .OUT (Pins 9-11 and 7)
High current outputs and their complements for driving the gates of the 7254 VMOS quad transistors which in turn drive the Y coils of the bubble memory.

LOGIC DIAGRAM

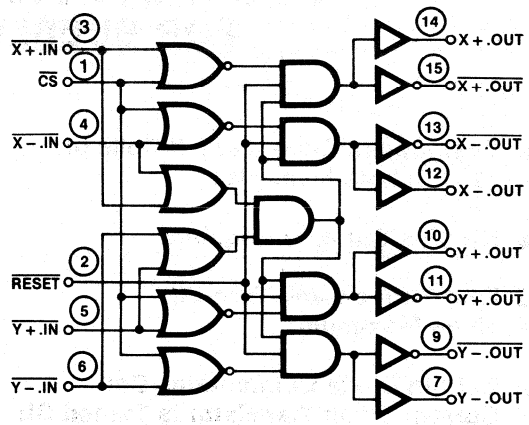

AFN-01359B

PRELIMINARY

7254
QUAD VMOS DRIVE TRANSISTORS FOR BUBBLE MEMORIES

- **Designed to Drive X and Y Coils of 7110 Bubble Memories**
- **No Bias Currents Required**
- **Fast Turn-on and Turn-off: 30 ns Maximum**
- **Built-in Diode Commutates Coil Current When Transistor is Turned Off**
- **Operates from V_{DD} Only**
- **VMOS FET Technology**
- **N-Channel and P-Channel Transistors in the Same Package**
- **Standard 14-Pin Dual-In-Line Package**

The 7254 is a quad transistor pack designed to drive the X and Y coils of Intel Magnetics Bubble Memories. Two 7254 packages are required for each bubble memory device. Each 7254 package would drive either the X or Y coil as shown under "circuit diagram." This recommended connection circuit takes into account the fact the Q1/Q2 and Q3/Q4 are tested as a pair for "On" resistance value to assure optimal bubble performance.

PIN CONFIGURATION

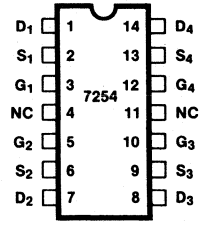

BLOCK DIAGRAM

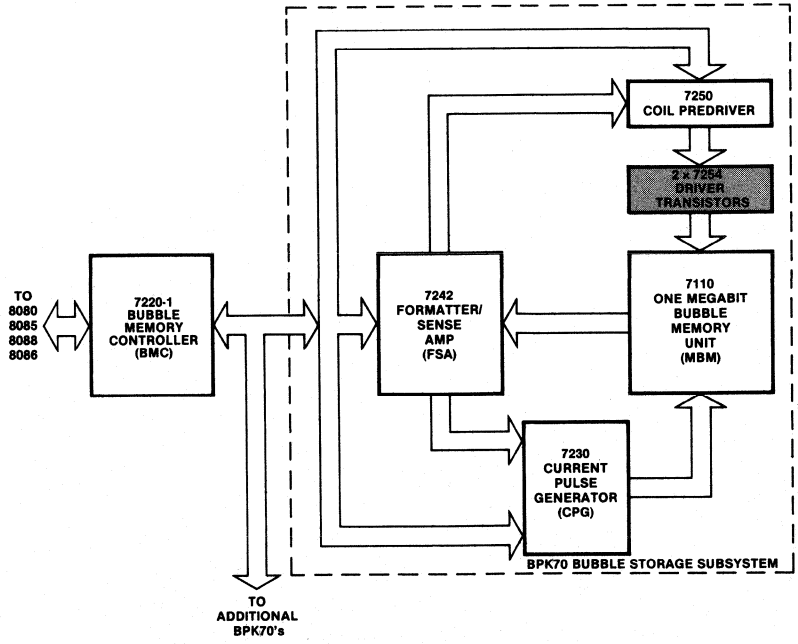

Block Diagram of Single Bubble Memory System — 128K Bytes

ABSOLUTE MAXIMUM RATINGS*

Temperature Under Bias ..... −30° to +85°C
Storage Temperature ..... −40° to +150°C
DGate Voltage (with respect to Source and Drain) 15V
Continuous Drain Current 2A
Peak Drain Current 3A
Power Dissipation (T_A = 80°C) 1.05W
Power Dissipation (T_A = 25°C) 1.75W

*COMMENT: Stresses above those listed under "Absolute Maximum Ratings" may cause permanent damage to the device. This is a stress rating only and functional operation of the device at these or any other conditions above those indicated in the operational sections of this specification is not implied. Exposure to absolute maximum rating conditions for extended periods may affect device reliability.

D.C. AND OPERATING CHARACTERISTICS

All Limits Apply for N- and P-Channel transistors, T_A = −30° to 85°C unless otherwise noted.

Symbol	Parameter	Limits			Unit	Test Conditions
		Min.	Typ.	Max.		
BV_{DSS}	Drain-Source Breakdown Voltage	20			V	V_{GS} = 0, I_D = 10 μA
$V_{GS}(th)$	Gate-Source Threshold Voltage	0.8			V	V_{GS} = V_{DS}, I_D = 1 mA, T_A = 25°C
		0.65			V	V_{GS} = V_{DS}, I_D = 1 mA, T_A = 85°C
I_{GSS}	Gate Leakage Current			10	ηA	V_{GS} = 12V, V_{DS} = 0, T_A = 85°C
I_{DSS}	Drain Leakage Current			500	ηA	V_{GS} = 0, V_{DS} = 20V, T_A = 85°C
R_{DS}	On-Resistance for sum of Q1+Q2, Q3+Q4 (Note 1)	2.0	2.5	3.0	Ω	V_{GS} = 11.4V, I_D = 1A, T_A = 25°C
V_{F1}	Parasitic Diode Forward Voltage (Note 1)			.75	V	V_{GS} = 0V, I_D = 50mA, T_A = 25°C
V_{F2}	Parasitic Diode Forward Voltage (Note 1)			1.20	V	V_{GS} = 0V, I_D = 1000mA, T_A = 25°C

Note: 1. Pulse test — 80 μs pulse, 1% duty cycle, r_{DS} increase 0.6%/°C.

A.C. CHARACTERISTICS

T_A = 25°C

Symbol	Parameter	Min.	Typ.	Max.	Unit	Test Conditions
$t_{ON}(N)$	N-Channel Turn-On Time			30	ns	See Switching Time Test Circuit and Waveforms below
$t_{ON}(P)$	P-Channel Turn-On Time			30	ns	
$t_{OFF}(N)$	N-Channel Turn-Off Time			30	ns	
$t_{OFF}(P)$	P-Channel Turn-Off Time			30	ns	

SWITCHING TIME TEST CIRCUIT

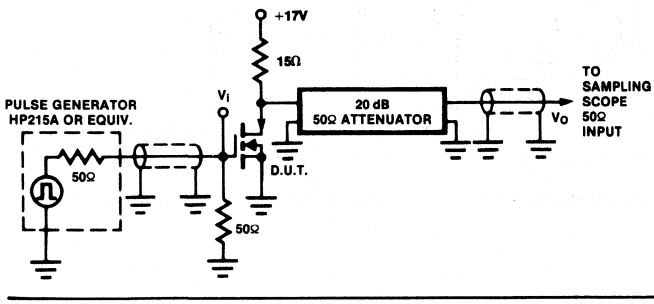

SWITCHING TIME TEST WAVEFORMS

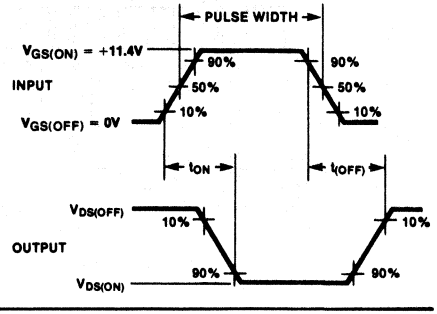

AFN-01360B

Capacitance

$T_A = 25°C$

Symbol	Parameter	Min.	Typ.	Max.	Unit	Test Conditions
$C_{iss}(N)$	N-Channel Input Capacitance			175	pF	$V_{GS} = 0, V_{DS} = 12V, f = 1$ MHz
$C_{iss}(P)$	P-Channel Input Capacitance			190	pF	$V_{GS} = 0, V_{DS} = 12V, f = 1$ MHz

CIRCUIT DIAGRAM

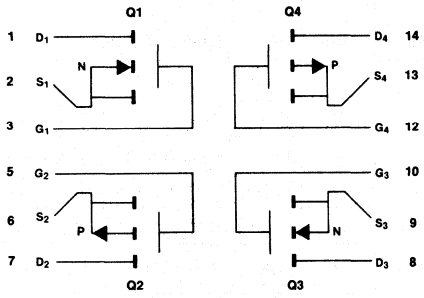

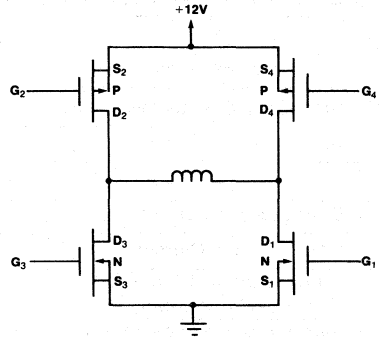

PACKAGING INFORMATION

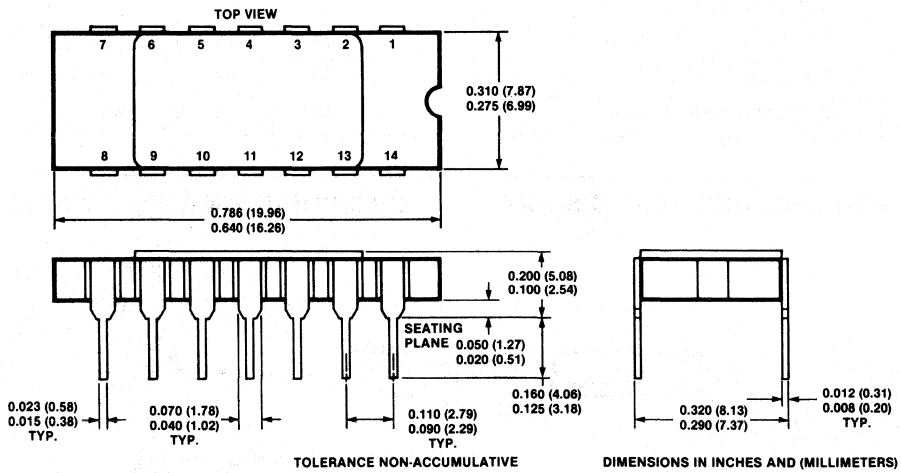

Telephony and Signal Processing

4

2910A
PCM CODEC — μLAW
8-BIT COMPANDED A/D AND D/A CONVERTER

2910A	Microcomputer* Mode or Direct Mode
2910A-4	Direct Mode Only

- **Per Channel, Single Chip Codec**
- **CCITT G711 and G712 Compatible, ATT T1 Compatible with 8th Bit Signaling**
- **Microcomputer Interface with On-Chip Timeslot Computation (2910A)**
- **Simple Direct Mode Interface When Fixed Timeslots are Used**
- **78 dB Dynamic Range, with Resolution Equivalent to 12-Bit Linear Conversion Around Zero**
- **±5% Power Supplies: +12V, +5V, −5V**
- **Precision On-Chip Voltage Reference**
- **Low Power Consumption 230 mW Typ. Standby Power 33 mW Typ.**
- **Fabricated with Reliable N-Channel MOS Process**

The Intel® 2910A is a fully integrated PCM (Pulse Code Modulation) Codec (Coder-Decoder), fabricated with N-channel silicon gate technology. The high density of integration allows the sample and hold circuits, the digital-to-analog converter, the comparator and the successive approximation register to be integrated on the same chip, along with the logic necessary to interface a full duplex PCM link and provide in-band signaling.

The primary applications are in telephone systems:

- Transmission — T1 Carrier
- Switching — Digital PBX's and Central Office Switching Systems
- Concentration — Subscriber Carrier/Concentrators

The wide dynamic range of the 2910A (78 dB) and the minimal conversion time (80 μsec minimum) make it an ideal product for other applications, like:

- Data Acquisition
- Secure Communications Systems
- Telemetry
- Signal Processing Systems

*Microcomputer mode is explained on page 4.

PIN CONFIGURATION

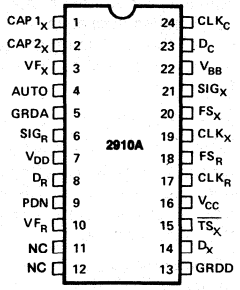

PIN NAMES

CAP 1_X, CAP 2_X	Holding Capacitor
VF_X	Analog Input
VF_R	Analog Output
D_R, D_C, SIG_X	Digital Input
SIG_R, D_X, $\overline{TS_X}$	Digital Output
CLK_C, CLK_X, CLK_R	Clock Input
FS_X, FS_R	Frame Sync Input
AUTO	Auto Zero Output
V_{BB}	Power (−5V)
V_{CC}	Power (+5V)
V_{DD}	Power (+12V)
PDN	Power Down
GRDA	Analog Ground
GRDD	Digital Ground
NC	No Connect

BLOCK DIAGRAM

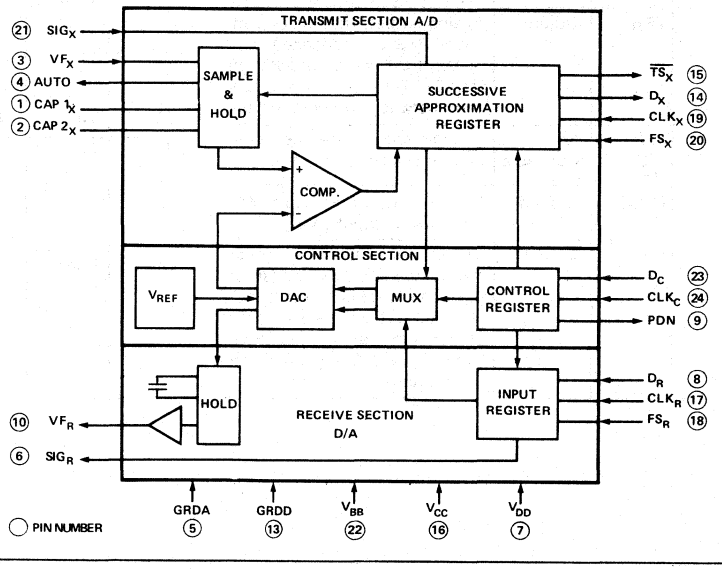

AFN-00162B

PIN DESCRIPTION

Pin No.	Symbol	Function	Description
1	$CAP1_X$	Hold	Connections for the transmit holding capacitor. Refer to Applications section.
2	$CAP2_X$		
3	VF_X	Input	Analog input to be encoded into a PCM word. The signal on this lead is sampled at the same rate as the transmit frame synchronization pulse FS_X, and the sample value is held in the external capacitor connected to the $CAP1_X$ and $CAP2_X$ leads until the encoding process is completed.
4	AUTO	Output	Most significant bit of the encoded PCM word (+5V for negative, −5V for positive inputs). Refer to the Codec Applications section.
5	GRDA	Ground	Analog return common to the transmit and receive analog circuits. Not connected to GRDD internally.
6	SIG_R	Output	Signaling output SIG_R is updated with the 8th bit of the receive PCM word on signaling frames, and is latched between two signaling frames. TTL interface.
7	V_{DD}	Power	+12V ± 5%; referenced to GRDA.
8	D_R	Input	Receive PCM highway (serial bus) interface. The Codec serially receives a PCM word (8 bits) through this lead at the proper time defined by FS_R, CLK_R, D_C, and CLK_C.
9	PDN	Output	Active high when Codec is in the power down state. TTL interface. Open drain output.
10	VF_R	Output	Analog output. The voltage present on VF_R is the decoded value of the PCM word received on lead D_R. This value is held constant between two conversions.
11	NC	No Connects	Recommended practice is to strap these NC's to GRDA.
12	NC		
13	GRDD	Ground	Ground return common to the logic power supply, V_{CC}.
14	D_X	Output	Output of the transmit side onto the send PCM highway (serial bus). The 8-bit PCM word is serially sent out on this pin at the proper time defined by FS_X, CLK_X, D_C, and CLK_C. TTL three-state output.
15	$\overline{TS_X}$	Output	Normally high, this signal goes low while the Codec is transmitting an 8-bit PCM word on the D_X lead. (Timeslot information used for diagnostic purposes and also to gate the data on the D_X lead.) TTL interface, open drain output.
16	V_{CC}	Power	+5V ± 5%, referenced to GRDD.
17	CLK_R	Input	Master receive clock defining the bit rate on the receive PCM highway. Typically 1.544 Mbps for a T1 carrier system. Maximum rate 2.1 Mbps. 50% duty cycle. TTL interface.
18	FS_R	Input	Frame synchronization pulse for the receive PCM highway. Resets the on-chip timeslot counter for the receive side. Maximum repetition rate 12 KHz. Also used to differentiate between non-signaling frames and signaling frames for the receive side. TTL interface.
19	CLK_X	Input	Master transmit clock defining the bit rate on the transmit PCM highway. Typically 1.544 Mbps for a T1 carrier system. Maximum rate 2.1 Mbps. 50% duty cycle. TTL interface.
20	FS_X	Input	Frame synchronization pulse for the transmit PCM highway. Resets the on-chip timeslot counter for the transmit side. Maximum repetition rate 12 KHz. Also used to differentiate between non-signaling frames on the transmit side.
21	SIG_X	Input	Signaling input. This digital input is transmitted as the 8th bit of the PCM word on the D_X lead, on signaling frames. TTL interface.
22	V_{BB}	Power	−5V ± 5%, referenced to GRDA.
23	D_C	Input	Data input to program the Codec for the chosen mode of operation. Becomes an active low chip select when CLK_C is tied to V_{CC}. TTL interface.
24	CLK_C	Input	Clock input to clock in the data on the D_C lead when the timeslot assignment feature is used; tie to V_{CC} to disable this feature. TTL interface.

FUNCTIONAL DESCRIPTION

The 2910A PCM Codec provides the analog-to-digital and the digital-to-analog conversions necessary to interface a full duplex (4 wires) voice telephone circuit with the PCM highways of a time division multiplexed (TDM) system.

In a typical telephone system the Codec is used between the PCM highways and the line filters.

The Codec provides two major functions:

- Encoding and decoding of analog signals (voice and call progress tones)
- Encoding and decoding of the signaling and supervision information

On a non-signaling frame, the Codec encodes the incoming analog signal at the frame rate (FS_X) into an 8-bit PCM word which is sent out on the D_X lead at the proper time. Similarly, the Codec fetches an 8-bit PCM word from the receive highway (D_R lead) and decodes an analog value which will remain constant on lead VF_R until the next receive frame. Transmit and receive frames are independent. They can be asynchronous (transmission) or synchronous (switching) with each other.

For channel associated signaling, the Codec transmit side will encode the incoming analog signal as previously described and substitute the signal present on lead SIG_X for the least significant bit of the encoded PCM word. Similarly, on a receive signaling frame, the Codec will decode the 7 most significant bits according to the CCITT G733 recommendation and will output the least significant bit value on the SIG_R lead until the next signaling frame. Signaling frames on the send and receive sides are independent of each other, and are selected by a double-width frame sync pulse on the appropriate channel.

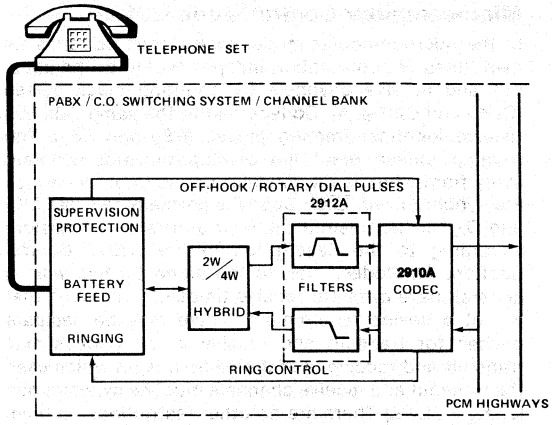

Functional Block Diagram of Line Circuit

The 2910A Codec is intended to be used on line and trunk terminations. The call progress tones (dial tone, busy tone, ring-back tone, re-order tone), and the pre-recorded announcements, can be sent through the voice-path; digital signaling (off hook and disconnect supervision, rotary dial pulses, ring control) is sent through the signaling path.

Circuitry is provided within the Codec to internally define the transmit and receive timeslots. In small systems this may eliminate the need for any external timeslot exchange; in large systems it provides one level of concentration. This feature can be bypassed and discrete timeslots sent to each Codec within a system.

In the power-down mode, most functions of the Codec are directly disabled to reduce power dissipation to a minimum.

CODEC OPERATION

Codec Control

The operation of the 2910A is defined by serially loading an 8-bit word through the D_C lead (data) and the CLK_C lead (clock). The loading is asynchronous with the other operations of the Codec, and takes place whenever transitions occur on the CLK_C lead. The D_C input is loaded in during the trailing edge of the CLK_C input.

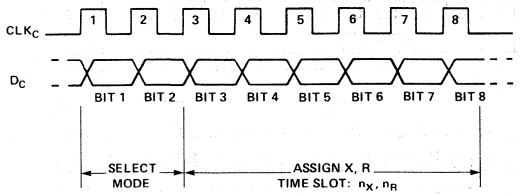

The control word contains two fields:

Bit 1 and Bit 2 define whether the subsequent 6 bits apply to both the transmit and receive side (00), the transmit side only (01), the receive side only (10), or whether the Codec should go into the standby, power-down mode (11). In the last case (11), the following 6 bits are irrelevant.

The last 6 bits of the control word define the timeslot assignment, from 000000 (timeslot 1) to 111111 (timeslot 64). Bit 3 is the most significant bit and bit 8 the least significant bit and last into the Codec.

Bit 1	Bit 2	Mode
0	0	X & R
0	1	X
1	0	R
1	1	Standby

Bit						
3	4	5	6	7	8	Timeslot
0	0	0	0	0	0	1
0	0	0	0	0	1	2
		•				•
		•				•
		•				•
		•				•
1	1	1	1	1	1	64

The Codec will retain the control word (or words) until a new word is loaded in or until power is lost. This feature permits dynamic allocation of timeslots for switching applications.

Microcomputer Control Mode (2910A)

In the microcomputer mode, each Codec performs its own timeslot computation independently for the transmit and receive channels by counting clock pulses (CLK_X and CLK_R). All Codecs tied to the same data bus receive identical framing pulses (FS_X and FS_R). The framing pulses reset the on-chip timeslot counters every frame; hence the timeslot counters of all devices are synchronized. Each Codec is programmed via CLK_C and D_C for the desired transmit and receive timeslots according to the description in the Codec Control Section. All Codecs tied to the same D_R bus will, in general, have different receive timeslots, although that is not a device requirement. There may be separate busses for transmit and receive or all Codecs may transmit and receive over the same bus, in which case the transmit and receive channels must be synchronous ($CLK_X = CLK_R$.) There are no other restrictions on timeslot assignments; a device may have the same transmit and receive timeslot even if a single bus is used.

There are several requirements for using the CLK_C-D_C interface in the microcomputer mode.

1. A complete timeslot assignment, consisting of eight negative transitions of CLK_C, must be made in less than one frame period. The assignment can overlap a framing pulse so long as all 8 control bits are clocked in within a total span of 125 μsec (for an 8 KHz frame rate). CLK_C must be left at a TTL low level when not assigning a timeslot.
2. A dead period of two frames must always be observed between successive timeslot assignments. The two frame delay is measured from the rising edge of the first CLK_C transition of the previous timeslot assigned.
3. When the device is in the power-down state a single control word will suffice to power-up the Codec and make a timeslot assignment. That is, the first assignment brings the device out of power-down and registers the timeslot information in the lower six bits of the control word.
4. Initialization sequence: The device contains an on-chip power-on clear function which guarantees that with proper sequencing of the supplies (V_{CC} or V_{DD} on last), the device will initialize with no timeslot assigned to either the transmit or receive channel. After a supply failure or whenever the supplies are applied, it is recommended that either power down assignment be made first, or the first timeslot assignment be a transmit timeslot or a transmit/receive timeslot. The consequence of making a receive timeslot assignment first, after supply application, is that the transmit channel will assume timeslot 1, potentially producing bus contention.
5. Transmit only/receive only operation is permitted provided that a power down assignment is made first. Otherwise, special circuits which use only one channel should be physically disconnected from the unused bus; this allows a timeslot to be made to an unused channel without consequence.

Example of Microcomputer Control Mode:

The two words 01000001 and 10000010 have been loaded into the Codec. The transmit side is now programmed for timeslot 2 and the receive side for timeslot 3. The Codec will output a PCM word on the transmit PCM highway (bus) during the timeslot 2 of the transmit frame, and will fetch a PCM word from the receive PCM highway during timeslot 3.

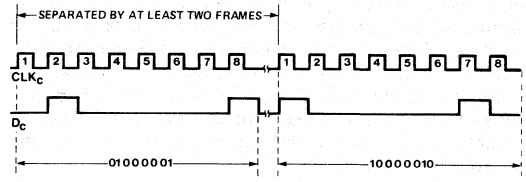

In this example the Codec interface to the PCM highway then functions as shown below. (FS_X and FS_R may be asynchronous.)

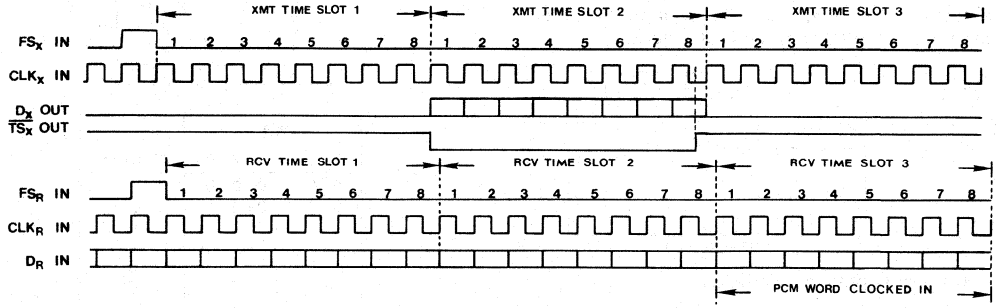

Direct Control Mode

The direct mode of operation will be selected when the CLK_C pin is strapped to the +5 volt supply (V_{CC}). In this mode, the D_C pin is an active low chip select. In other words, when D_C is low, the device transmits and receives in the timeslots which follow the appropriate framing pulses. With D_C high the device is in the power down state. Even though CLK_C characteristics are simpler for the 2910A it will operate properly when plugged into a 2910 board.

Deactivation of a channel by removal of the appropriate framing pulse (FS_X or FS_R) is generally not permitted. Specifically, framing pulses must be applied for a minimum of two frames after a change in state of D_C in order for the D_C change to be internally sensed. In particular, when entering standby in the direct mode, framing pulses must be applied as usual for two frames after D_C is brought high. Thereafter, the framing pulses could, if desired, be removed until such time as the device is to be reactivated by the reapplication of framing pulses with D_C low.

The Codec will enter the direct mode within three frame times (375 μsec) as measured from the time the device power supplies settle to within the specified limits. This assumes that CLK_C is tied to V_{CC} and that all clocks are available at the time the supplies have settled.

General Control Requirements

All bit and frame clocks should be applied whenever the device is active. In particular, an unused channel cannot be deactivated by removal of its associated frame or bit clock while the other channel of the same device remains active.

A single channel cannot be deactivated except by physical disconnection of the data lead (D_X or D_R) from the system data bus. A device (both transmit and receive channels) may be deactivated in either control mode by powering down the device. Both channels are always powered down together.

Encoding

The VF signal to be encoded is input on the VF_X lead. An internal switch samples the signal and the hold function is performed by the external capacitor connected to the $CAP1_X$ and $CAP2_X$ leads. The sampling and conversion is synchronized with the transmit timeslot. The PCM word is then output on the D_X lead at the proper timeslot occurrence of the following frame. The A/D converter saturates at approximately ±2.2 volts RMS (±3.1 volts peak).

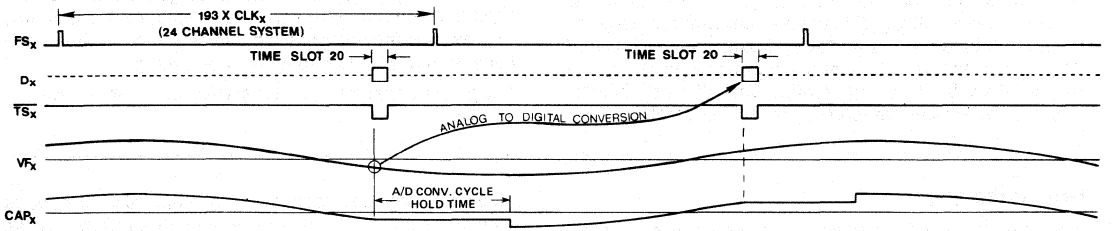

Decoding

The PCM word is fetched by the D_R lead from the PCM highway at the proper timeslot occurrence. The decoded value is held on an internal sample and hold capacitor.

The buffered non-return to zero output signal on the VF_R lead has a dynamic range of approximately ±2.2 volts RMS (±3.1 volts peak).

Signaling

The duration of the FS_X and FS_R pulses defines whether a frame is an information frame or a signaling frame:

- A frame synchronization pulse which is a full clock period in duration (CLK_X period for FS_X, CLK_R period for FS_R) designates a non-signaling frame.
- A frame synchronization pulse which is two full clock periods in duration (two CLK_X periods for FS_X, two CLK_R periods for FS_R) designates a signaling frame.

On the encoding side, when the FS_X pulse is widened, the 8th bit of the PCM word will be replaced by the value on the SIG_X input at the time when the 8th bit is output on the D_X lead.

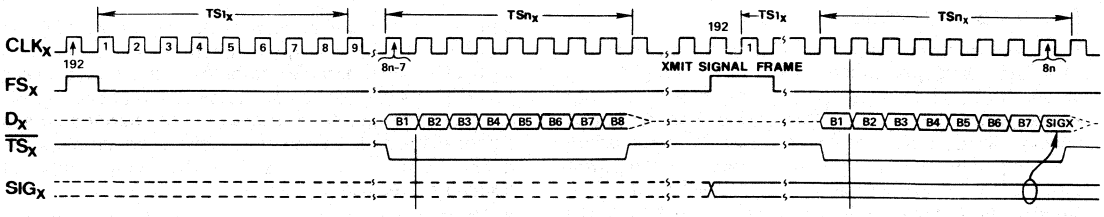

On the decoding side, when the FS_R pulse is widened, the 8th bit of the PCM word is detected and transmitted on the SIG_R lead. That output is latched until the next receiving signaling frame.

The remaining 7 bits are decoded according to the value given in the CCITT G733 recommendation. The SIG_R lead is reset to a TTL low level whenever the Codec is in the power-down state.

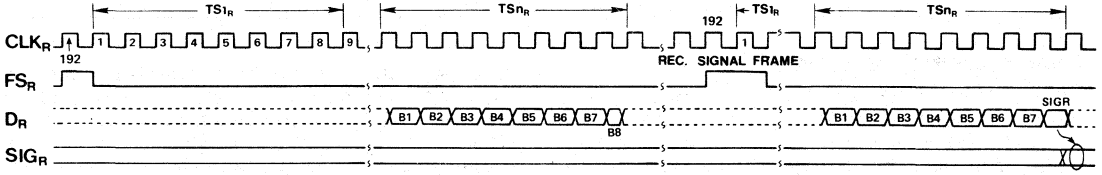

T1 Framing

The Codec will accept the standard D3/D4 framing format of 193 clock pulses per frame (equivalent to CLK_X, CLK_R of 1.544 Mb/sec). However, the 193rd bit may be blanked (equivalent to CLK_X, CLK_R of 1.536 Mb/sec) if desired.

Standby Mode — Power Down

To minimize power consumption and heat dissipation a standby mode is provided where all Codec functions are disabled except for D_C and CLK_C leads. These allow the Codec to be reactivated. In the microcomputer mode the Codec is placed into standby by loading a control word (D_C) with a "1" in bits 1 and 2 locations. In the direct mode when D_C is brought high, the all "1's" control word is internally transferred to the control register, invoking the standby condition.

While in the standby mode, the D_X output is actively held in a high impedance state to guarantee that the PCM bus will not be driven. The SIG_R output is held low to provide a known condition and remains this way upon activation until it is changed by signaling.

The power consumption in the standby mode is typically 33 mW.

Power-On Clear

Whether the device is used in the direct or microcomputer mode, an internal reset (power-on clear) is generated, forcing the device into the power down state, when power is supplied by any of the following methods. (1) Device power supplies are turned on in a system power-up situation where either V_{CC} or V_{DD} is applied last. (2) A large supply transient causes either of the two positive supplies to drop to less than approximately 2 volts. (3) A board containing Codecs is plugged into a "hot" system where V_{CC} or V_{DD} is the last contact made. It may be necessary to trim back the edge connector pins or fingers on V_{CC} or V_{DD} relative to the other supply to guarantee that the power-on clear will operate properly when a board is plugged into a "hot" system. Furthermore, the Codec will inhibit activity on $\overline{TS_X}$ and D_X during the application of power supplies.

The device is also tolerant of transients in the negative supply (V_{BB}) so long as V_{BB} remains more negative than −3.5 volts. V_{BB} transients which exceed this level should be detected and followed by a system reinitialization.

Precision Voltage Reference for the D/A Converter

The voltage reference is generated on the chip and is calibrated during the manufacturing process. The technique uses the difference in sub-surface charge density between two suitably implanted MOS devices to derive a temperature stable and bias stable reference voltage.

A gain setting op amp, programmed during manufacturing, "trims" the reference voltage source to the final precision voltage reference value provided to the D/A converter. The precision voltage reference determines the initial gain and dynamic range characteristics described in the A.C. Transmission Specification section.

μ-Law Conversion

μ-law represents a particular implementation of a piece-wise linear approximation to a logarithmic compression curve which is:

$$F(x) = \mathrm{Sgn}(x)\frac{\ln(1+\mu|x|)}{\ln(1+\mu)},\ 0 \leq |x| \leq 1$$

where x = input signal

$\mathrm{Sgn}(x)$ = sign of input signal

$\mu = 255$ (defined by AT&T)

The 2910A $\mu = 255$ law Codec uses a 15 segment approximation to the logarithmic law. Each segment consists of 16 steps. In adjacent segments the step sizes are in a ratio of two to one. Within each segment the step size is constant except for the first step of the first segment of the encoder, as indicated in the attached table. The output levels are midway between the corresponding decision levels. The output levels y_n are related to the input levels x_n by the expression:

$$y_n = \frac{x_n + x_{n+1}}{2} \text{ for } 1 \leq n \leq 127$$

$$y_0 = x_0 = 0 \text{ for } n = 0$$

These relationships are implicit in the attached table.

CODEC TRANSFER CHARACTERISTIC

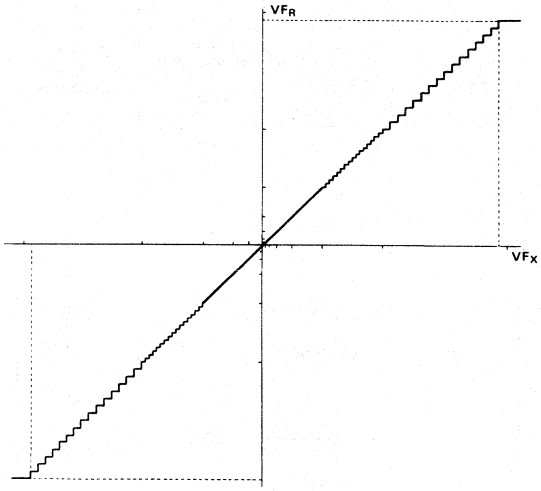

DECODER TRANSFER CHARACTERISTIC
(D/A CONVERSION)

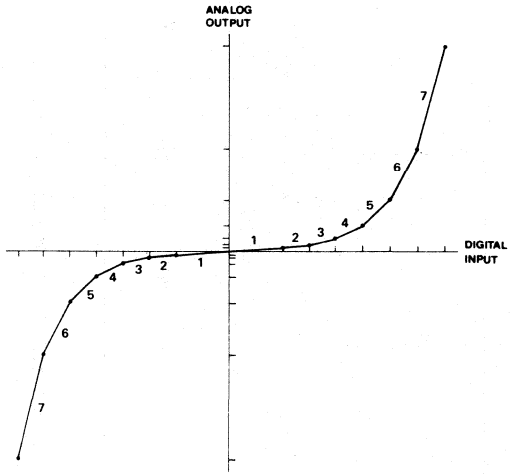

CODER TRANSFER CHARACTERISTIC
(A/D CONVERSION)

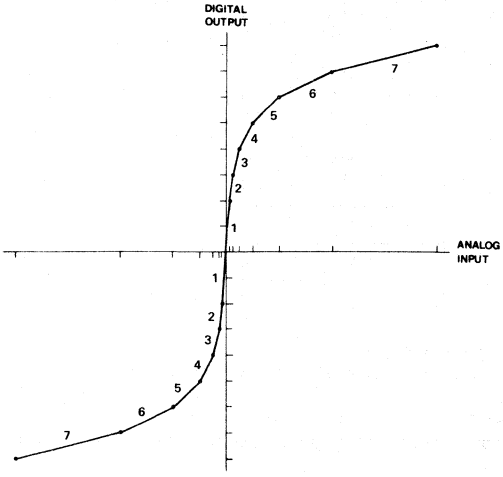

During signaling frames, a 7-bit transfer characteristic is implemented in the decoder. This characteristic is derived from the decoder values in the attached table by assuming a value of "1" for the LSB (8th bit) and shifting the decoder transfer characteristic one half-step away from the origin. For example, the maximum decoder output level for signaling frames has normalized value 7903, whereas it has value 8031 in normal (non-signaling) frames.

Theoretical μ-Law — Positive Input Values (for Negative Input Values, Invert Bit 1)

1	2	3	4	5	6	7	8
Segment Number	No. of Steps x Step Size	Value at Segment End Points	Decision Value Number n	Decision Value x_n[1]	PCM Word[3] MSB Bit Number LSB 1 2 3 4 5 6 7 8	Normalized Value at Decoder Output y_n[4]	Decoder Output Value Number
		8159[5]	(128)	(8159)			
					1 0 0 0 0 0 0 0	8031	127
			127	7903			
8	16 x 256				(see Note 2)		
			113	4319			
					1 0 0 0 1 1 1 1	4191	112
		4063	112	4063			
7	16 x 128				(see Note 2)		
			97	2143			
					1 0 0 1 1 1 1 1	2079	96
		2015	96	2015			
6	16 x 64				(see Note 2)		
			81	1055			
					1 0 1 0 1 1 1 1	1023	80
		991	80	991			
5	16 x 32				(see Note 2)		
			65	511			
					1 0 1 1 1 1 1 1	495	64
		479	64	479			
4	16 x 16				(see Note 2)		
			49	239			
					1 1 0 0 1 1 1 1	231	48
		223	48	223			
3	16 x 8				(see Note 2)		
			33	103			
					1 1 0 1 1 1 1 1	99	32
		95	32	95			
2	16 x 4				(see Note 2)		
			17	35			
					1 1 1 0 1 1 1 1	33	16
		31	16	31			
	15 x 2				(see Note 2)		
			2	3			
1					1 1 1 1 1 1 1 0	2	1
↓	1 x 1		1	1			
					1 1 1 1 1 1 1 1		
			0	0		0	0

Notes:

1. 8159 normalized value units correspond to the value of the on-chip voltage reference.
2. The PCM word corresponding to positive input values between two successive decision values numbered n and n + 1 (see column 4) is (255 – n) expressed as a binary number.
3. The PCM word on the highways is the same as the one shown in column 6.
4. The voltage output on the VF_R lead is equal to the normalized value given in the table, augmented by an offset. The offset value is approximately 15 mV.
5. x_{128} is a virtual decision value.

APPLICATIONS

Circuit Interface — Without External Auto Zero

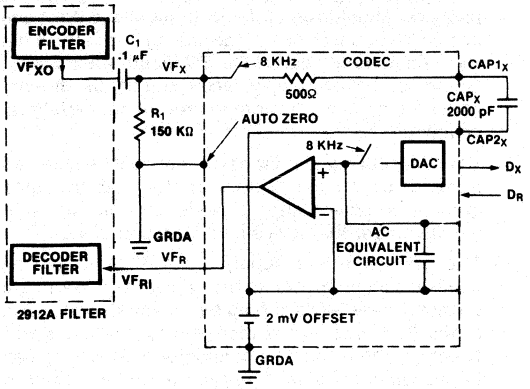

Circuit Interface — With External Auto Zero

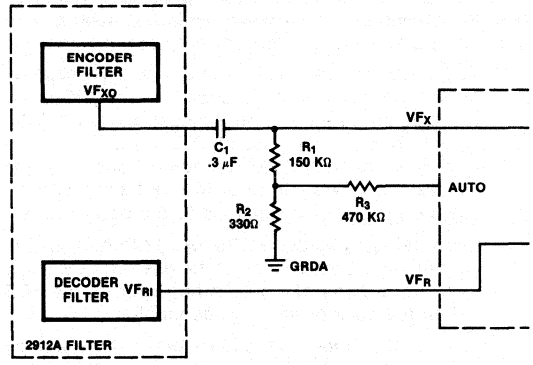

Holding Capacitor

For an 8KHz sampling system the transmit holding capacitor CAP_X should be 2000pF ± 20%.

Auto Zero

The 2910A contains a transparent on-chip auto zero plus a device pin for implementing a sign-bit driven external auto zero feedback loop. The on-chip auto zero reduces the input offset voltage of the encoder (VF_X) to less than 3mV. For most telephony applications, this input offset is perfectly acceptable, since it insures the encoder is biased in the lower 25% of the first segment.

Where lower input offset is required the external auto zero loop may be used to bias the encoder exactly at the zero crossing point. The consequence of the external auto zero loop, aside from extra components, is the addition of the dithering auto-zero signal to the input signal, resulting in slightly higher idle channel noise (approximately 2dB) than when the external loop is not used. Consequently, where the application permits, it is recommended that the external auto zero loop not be used.

The circuit interface without external auto zero shows a possible connection between VF_X and AUTO leads with the recommended values of $C_1 = 0.1\,\mu F$ and $R_1 = 150\,K\Omega$. The circuit interface with auto zero drawing shows a possible connection between the VF_X and AUTO leads with the recommended values of $C_1 = 0.3\,\mu F$, $R_1 = 150\,K\Omega$, $R_2 = 330\,\Omega$, and $R_3 = 470\,K\Omega$.

Filters Interface

The filters may be interfaced as shown in the circuit interface diagrams. Note that the output pulse stream is of the non-return-to-zero type and hence requires the (sin x)/x correction provided by the 2912A filter.

D_X Buffering

For higher drive capability or increased system reliability it may be desirable that the D_X output of a group of Codecs be buffered from the system PCM bus with an external three-state or open collector buffers. A buffer can be enabled with the appropriate Codec generated $\overline{TS_X}$ signal or signals. $\overline{TS_X}$ signal may also be used to activate external zero code suppression logic, since the occurrence of an active state of any $\overline{TS_X}$ implies the existence of PCM voice bits (as opposed to transparent data bits) on the bus.

Grounding, Decoupling, and Layout Recommendations

The most important steps in designing a low noise line card are to insure that the layout of the circuit components and traces results in a minimum of cross coupling between analog and digital signals, and to provide well bypassed and clean power supplies, solid ground planes, and minimal lead lengths between components.

1. All power source leads should be bypassed to ground on each printed circuit board (PCB), on which codecs are provided. At least one electrolytic bypass capacitor (at least 10 μF) per board is recommended at the point where all power traces from the codecs and filters join prior to interfacing with the edge connector pins assigned to the power leads.
2. When using two-sided PCBs, use both corresponding pins on opposite sides of the board for the same power lead. Strap them together both on the PCB and on the back of the edge connector.
3. Lay out the traces on codec- and filter-equipped boards such that analog signal and capacitor leads from the digital clock and data leads are separated as widely as possible.
4. Connect the codec sample and hold capacitor with the shortest leads possible. Mount it as close to the codec CAP1X, CAP2X pins as possible. Shield the capacitor traces with analog ground.
5. Do not lay out any board traces (especially digital) that pass between or near the leads of the sample and hold capacitor(s) since they are in high impedance circuits which are sensitive to noise coupling.
6. Keep analog voice circuit leads paired on their layouts so that no intervening circuit leads are permitted to run parallel to them and/or between them.
7. Arrange the layout for each duplicated line, trunk or channel circuit in identical form.
8. Line circuits mounted extremely close to adjacent line circuits increase the possibility of interchannel crosstalk.
9. Avoid assignment of edge connector pins to any analog signal adjacent to any lead carrying digital (periodic) signals or power.
10. The optimum grounding configuration is to maintain separate digital and analog grounds on the circuit boards, and to carry these grounds back to the power supply with a low impedance connection. This keeps the grounds separate over the entire system except at the power supply.
11. The voltage difference between ground leads GRDA and GRDD (analog and digital ground) should not exceed two volts. One method of preventing any substantial voltage difference between leads GRDA and GRDD is to connect two diodes back to back in opposite directions across these two ground leads on each board. An additional or alternate method of suppressing ground lead noise is to bridge a RF choke of about 1 to 2 μH or greater, as space allows, between leads GRDA and GRDD on each board.
12. Codec-filter pairs should be aligned so that pins 9 through 16 of the filter face pins 1 through 12 of the codec. This minimizes the distance for analog connections between devices and with no crossing analog lines.
13. No digital or high voltage level (such as ringing supply) lines should run under or in parallel with these analog VF connections. If the analog lines are on the top (component side) of the PC board, then GRDD, GRDA, or power supply leads should be directly under them, on the bottom to prevent analog/digital coupling.
14. Both the codec and filter devices should be shielded from traces on the bottom of the PCB by using ground or power supply leads on the top side directly under the device (like a ground plane).
15. Two +5 volt power supply leads (V_{CC}) should be used on each PCB, one to the filters, the other to the codecs. These leads should be separately decoupled at the PCB where they then join to a single 5 volt supply at the backplane connector. Decoupling can be accomplished with either a series resistor/parallel capacitor (RC lowpass) or a series RF choke and parallel capacitor for each 5 volt lead. The capacitor should be at least 10 μF in parallel with a 0.1 μF ceramic. This filters both high and low frequencies and accommodates large current spikes due to switching.
16. Both grounds and power supply leads must have low resistance and inductance. This should be accomplished by using a ground plane whenever possible. When narrower traces must be used, a minimum width of 4 millimeters should be maintained. Either multiple or extra large plated through holes should be used when passing the ground connections through the PCB.
17. The 2912A PCM filter should have all power supplies bypassed to analog ground (GRDA). The 2910A Codec + 5V power supplies should be bypassed to the digital ground (GRDD). This is appropriate when separate + 5V power supply leads are used as suggested in item 15. The − 5V and + 12V supplies should be bypassed to analog ground (GRDA). Bypass capacitors at each device should be high frequency capacitors of approximately 0.1 to 1.0 μF value. Their lead lengths should be minimized by routing the capacitor leads to the appropriate ground plane under the device (either GRDA or GRDD).
18. Relay operation, ring voltage application, interruptions, and loop current surges can produce enormous transients. Leads carrying such signals must be routed well away from both analog and digital circuits on the line card and in backplanes. Lead pairs carrying current surges should be routed closely together to minimize possible inductive coupling. The microcomputer clock lead is particularly vulnerable, and should be buffered. Care should also be used in the backplane layout to prevent pick-up surges. Any other latching components (relay buffers, etc.) should also be protected from surges.

Absolute Maximum Ratings*

Temperature Under Bias ..... −10°C to +80°C
Storage Temperature ..... −65°C to +150°C
All Input or Output Voltages with
Respect to V_{BB} ..... −0.3V to +20V
V_{CC}, V_{DD}, GRDD, and GRDA with Respect
to V_{BB} ..... −0.3V to +20V
Power Dissipation 1.35W

***Comment:** Stresses above those listed under "Absolute Maximum Ratings" may cause permanent damage to the device. This is a stress rating only and functional operation of the device at these or any other conditions above those indicated in the operational sections of this specification is not implied. Exposure to absolute maximum rating conditions for extended periods may affect device reliability.*

D.C. and Operating Characteristics

$T_A = 0°C$ to $+70°C$, $V_{DD} = +12V \pm 5\%$, $V_{CC} = +5V \pm 5\%$, $V_{BB} = -5V \pm 5\%$, GRDA = 0V, GRDD = 0V, unless otherwise specified.

Symbol	Parameter	Limits			Unit	Test Conditions
		Min	Typ[1]	Max		
DIGITAL INTERFACE						
I_{IL}	Low Level Input Current			10	μA	$V_{IN} < V_{IL}$
I_{IH}	High Level Input Current			10	μA	$V_{IN} > V_{IH}$
V_{IL}	Input Low Voltage			0.6	V	
V_{IH}	Input High Voltage	2.0			V	
V_{OL}	Output Low Voltage			0.4	V	D_X, $I_{OL} = 4.0$ mA SIG_R, $I_{OL} = 0.5$ mA $\overline{TS_X}$, $I_{OL} = 3.2$ mA, open drain PDN, $I_{OL} = 1.6$ mA, open drain
V_{OH}	Output High Voltage	2.4			V	D_X, $I_{OH} = 15$ mA SIG_R, $I_{OH} = 0.08$ mA
ANALOG INTERFACE						
Z_{AI}	Input Impedance when Sampling, VF_X	125	300	500	Ω	in series with CAP_X to GRDA, $-3.1V < V_{IN} < 3.1V$
Z_{AO}	Small Signal Output Impedance, VF_R	100	180	300	Ω	$-3.1V < V_{OUT} < 3.1V$
V_{OR}	Output Offset Voltage at VF_R			±50	mV	all "1s" code sent to D_R
V_{IX}	Input Offset Voltage at VF_X			±5	mV	VF_X voltage required to produce all "1s" code at D_X
V_{OL}	Output Low Voltage, Auto Zero		V_{BB}	(V_{BB} + 2)	V	400 KΩ to GRDA
V_{OH}	Output High Voltage, Auto Zero	(V_{CC} − 2)	V_{CC}		V	400 KΩ to GRDA
POWER DISSIPATION						
I_{DDO}	Standby Current		0.7	1.1	mA	clock frequency = 2.048 MHz
I_{CCO}	Standby Current		4	7.0	mA	
I_{BBO}	Standby Current		1	2.5	mA	
I_{DDI}	Operating Current		11	16	mA	
I_{CCI}	Operating Current		13	21	mA	
I_{BBI}	Operating Current		4	6.0	mA	

Notes:
1. Typical values are for $T_A = 25°C$ and nominal power supply values.

A.C. Characteristics

$T_A = 0°C$ to $+70°C$, $V_{DD} = +12V \pm 5\%$, $V_{CC} = +5V \pm 5\%$, $V_{BB} = -5V \pm 5\%$, GRDA = 0V, GRDD = 0V, unless otherwise specified.

Symbol	Parameter	Limits Min	Limits Typ[1]	Limits Max	Unit	Test Conditions
TRANSMISSION (any two Codecs, end-to-end, unless otherwise specified)						
S/D	Signal/Total Distortion Ratio, C-Message Weighted (see Figure 1)	Fig. 1	Fig. 1		dB	$VF_X = 1.02$ KHz, sinusoid
S/D	Signal/Total Distortion Ratio, C-Message Weighted (half-channel)[2] (see Figure 1)		Fig. 1		dB	$VF_X = 1.02$ KHz, sinusoid
ΔG	Gain Tracking Error (half-channel)[2] (see Figure 2)	SPECIFICATIONS UNDER REVISION, CONSULT INTEL REPRESENTATIVE			dB dB dB	$VF_X = 1.02$ KHz, sinusoid -37 dBm0 ≤ $VF_X < 0$ dBm0 -50 dBm0 ≤ $VF_X < -37$ dBm0 -55 dBm0 ≤ $VF_X < -50$ dBm0
N_{IC1}	Idle Channel Noise, C-Message Weighted		2	10	dBrnc0	no signaling[3]
N_{IC2}	Idle Channel Noise, C-Message Weighted		10	13	dBrnc0	with 6th and 12th frame signaling[3]
HD	Harmonic Distortion (2nd or 3rd)		−48	−44	dB	$VF_X = 1.02$ KHz, 0 dBm0; measured at decoder output VF_R
IMD	Intermodulation Distortion 2nd Order 3rd Order			 −45 −55	 dB dB	4-tone stimulus in accordance with BSTR PUB 41009

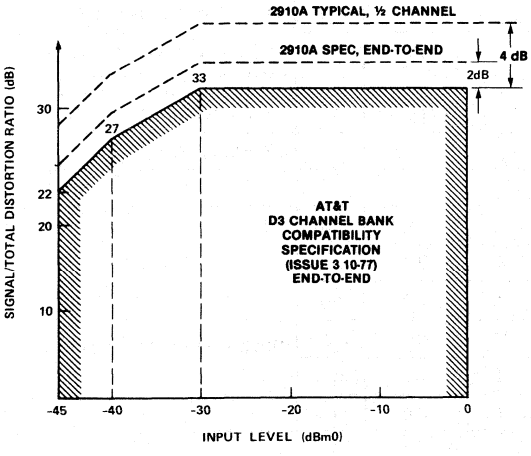

Figure 1. Signal/Total Distortion Ratio

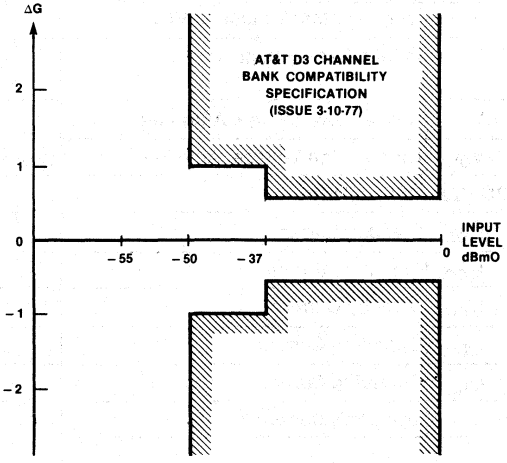

Figure 2. Gain Tracking Error (ΔG) vs Signal Level 0 dBmO

A.C. Characteristics (continued)

$T_A = 0°C$ to $+70°C$, $V_{DD} = +12V \pm 5\%$, $V_{CC} = +5V \pm 5\%$, $V_{BB} = -5V \pm 5\%$, GRDA = 0V, GRDD = 0V, unless otherwise specified.

Symbol	Parameter	Limits			Unit	Test Conditions
		Min	Typ[1]	Max		
GAIN AND DYNAMIC RANGE						
DmW	Digital Milliwatt Response	5.53	5.63	5.73	dBm	23°C, nominal supplies[4]
DmW_T	DmW_O Variation with Temperature		−0.001	−0.002	dB/°C	relative to 23°C[4]
DmW_S	DmW_O Variation with Supplies			±0.07	dB	supplies ±5%[4]
A_{IR}	Input Dynamic Range	2.17	2.20	2.23	V_{RMS}	using D.C. and A.C. tests[5] 23°C, nominal supplies
A_{IRT}	Input Dynamic Range with Temperature			−0.5	mV_{RMS}/°C	relative to 23°C
A_{IRS}	Input Dynamic Range with Supplies			±18	mV_{RMS}	supplies ±5%
A_{OR}	Output Dynamic Range, VF_R	2.13	2.16	2.19	V_{RMS}	23°C, nominal supplies
A_{ORT}	A_{OR} Variation with Temperature			−0.5	mV_{RMS}/°C	relative to 23°C
A_{ORS}	A_{OR} Variation with Supplies			±18	mV_{RMS}	supplies ±5%
SUPPLY REJECTION AND CROSSTALK						
$PSRR_1$	V_{DD} Power Supply Rejection Ratio	50			dB	decoder alone[6]
$PSRR_2$	V_{BB} Power Supply Rejection Ratio	35			dB	decoder alone[6]
$PSRR_3$	V_{CC} Power Supply Rejection Ratio	50			dB	decoder alone[6]
$PSRR_4$	V_{DD} Power Supply Rejection Ratio	50			dB	encoder alone[7]
$PSRR_5$	V_{BB} Power Supply Rejection Ratio	45			dB	encoder alone[7]
$PSRR_6$	V_{CC} Power Supply Rejection Ratio	50			dB	encoder alone[7]
CT_R	Crosstalk Isolation, Receive Side	75	80		dB	see Note 8
CT_T	Crosstalk Isolation, Transmit Side	75	80		dB	see Note 9
CAPX	Input Sample and Hold Capacitor	1600	2000	2400	pF	

Notes:

1. Typical values are for $T_A = 25°C$ and nominal power supply values.
2. Measured in one direction, either decoder or encoder and an ideal device.
3. If the external auto-zero is used N_{IC1} has a typical value of 8 dBrnc0 and N_{IC2} has a typical value of 13 dBrnc0.
4. D_R of Device Under Test (D.U.T.) driven with repetitive digital word sequence specified in CCITT recommendation G.711. Measurement made at VF_R output.
5. With the D.C. method the positive and negative clipping levels are measured and A_{IR} is calculated. With the A.C. method a sinusoidal input signal to VF_X is used where A_{IR} is measured directly.
6. D.U.T. decoder; impose 200 mV_{P-P}, 1.02 KHz on appropriate supply; measurement made at decoder output; decoder in idle channel conditions.
7. D.U.T. encoder; impose 200 mV_{P-P}, 1.02 KHz on appropriate supply; measurement made at encoder output; encoder in idle channel conditions.
8. VF_X of D.U.T. encoder = 1.02 KHz, 0 dBm0. Decoder under quiet channel conditions; measurement made at decoder output.
9. $VF_X = 0$ Vrms. Decoder = 1.02 KHz, 0 dBm0. Encoder under quiet channel conditions; measurement made at encoder output.

A.C. Characteristics — Timing Specification

$T_A = 0°C$ to $+70°C$, $V_{DD} = +12V \pm 5\%$, $V_{CC} = +5V \pm 5\%$, $V_{BB} = -5V \pm 5\%$, GRDA = 0V, GRDD = 0V, unless otherwise specified.

Symbol	Parameter	Limits Min	Limits Max	Units	Comments
CLOCK SECTION					
t_{CY}	Clock Period	485		ns	CLK_X, CLK_R (2.048 MHz systems), CLK_C
t_r, t_f	Clock Rise and Fall Time	0	30	ns	CLK_X, CLK_R, CLK_C
t_{CLK}	Clock Pulse Width	215		ns	CLK_X, CLK_R, CLK_C
t_{CDC}	Clock Duty Cycle ($t_{CLK} \div t_{CY}$)	45	55	%	CLK_X, CLK_R
TRANSMIT SECTION					
t_{VFX}	Analog Input Conversion	20		timeslot	from leading edge of transmit timeslot[1]
t_{DZX}	Data Enabled on TS Entry	50	180	ns	$0 < C_{LOAD} < 100$ pF
t_{DHX}	Data Hold Time	80	230	ns	$0 < C_{LOAD} < 100$ pF
t_{HZX}	Data Float on TS Exit	75	245	ns	$C_{LOAD} = 0$
t_{SON}	Timeslot X to Enable	30	220	ns	$0 < C_{LOAD} < 100$ pF
t_{SOFF}	Timeslot X to Disable	70	225	ns	$C_{LOAD} = 0$
t_{SS}	Signal Setup Time	0		ns	relative to bit 7 falling edge
t_{SH}	Signal Hold Time	100		ns	relative to bit 8 falling edge
t_{FSD}	Frame Sync Delay	15	150	ns	
RECEIVE AND CONTROL SECTIONS					
t_{VFR}	Analog Output Update	9 1/16	9 1/16	timeslot	from leading edge of the channel timeslot
t_{DSR}	Receive Data Setup	20		ns	
t_{DHR}	Receive Data Hold	60		ns	
t_{SIGR}	SIG_R Update		1	μs	from trailing edge of the channel timeslot
t_{FSD}	Frame Sync Delay	15	150	ns	
t_{DSC}	Control Data Setup	100		ns	Microcomputer mode only
t_{DHC}	Control Data Hold	100		ns	Microcomputer mode only

Notes:

1. The 20 timeslot minimum insures that the complete A/D conversion will take place under any combination of receive interrupt or asynchronous operation of the Codec. If the transmit channel *only* is operated, the A/D conversion can be completed in a minimum of 11 timeslots. Refer to the Codec Control General Requirement section for instructions on setting a channel in an idle condition.

TIMING WAVEFORMS[1]

TRANSMIT TIMING

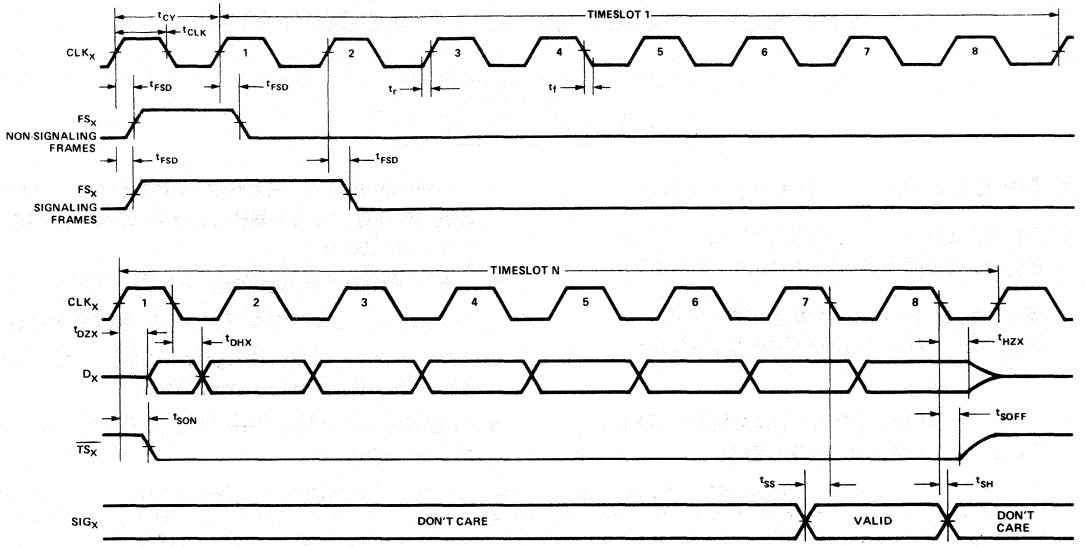

RECEIVE TIMING

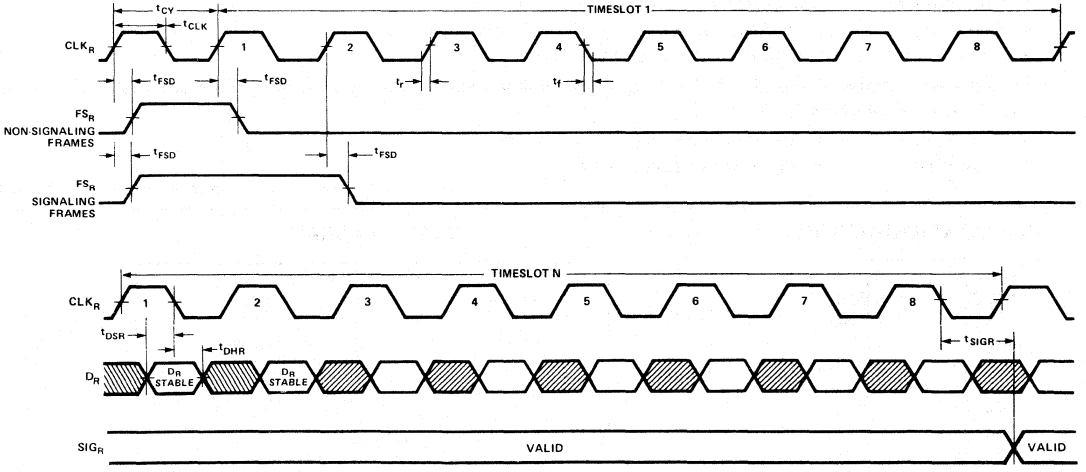

CONTROL TIMING

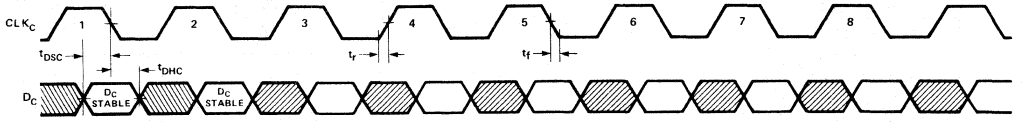

Notes: 1. All timing parameters referenced to 1.5V, except t_{HZX} and t_{SOFF} which reference a high impedance state.

2911A
PCM CODEC — A LAW
8-BIT COMPANDED A/D AND D/A CONVERTER

2911A-1	Microcomputer* Mode or Direct Mode
2911A-2	Direct Mode Only

- **Per Channel, Single Chip Codec**
- **CCITT G711 and G732 Compatible, Even Order Bits Inversion Included**
- **Microcomputer Interface with On-Chip Time-Slot Computation (2911A-1)**
- **Simple Direct Mode Interface When Fixed Timeslots Are Used**
- **66 dB Dynamic Range, with Resolution Equivalent to 11-Bit Linear Conversion Around Zero**
- **±5% Power Supplies: +12V, +5V, −5V**
- **Precision On-Chip Voltage Reference**
- **Low Power Consumption 230 mW Typ. Standby Power 33 mW Typ.**
- **Fabricated with Reliable N-Channel MOS Process**

The Intel® 2911A is a fully integrated PCM (Pulse Code Modulation) Codec (Coder-Decoder), fabricated with N-channel silicon gate technology. The high density of integration allows the sample and hold circuits, the digital-to-analog converter, the comparator and the successive approximation register to be integrated on the same chip, along with the logic necessary to interface a full duplex PCM link.

The primary applications are in telephone systems:

- Transmission — 30/32 Channel Systems at 2.048 Mbps
- Switching — Digital PBX's and Central Office Switching Systems
- Concentration — Subscriber Carrier/Concentrators

The wide dynamic range of the 2911A (66 dB) and the minimal conversion time (80 μsec minimum) make it an ideal product for other applications, like:

- Data Acquisition
- Telemetry
- Secure Communications Systems
- Signal Processing Systems

*Microcomputer mode is explained on page 4.

PIN CONFIGURATION

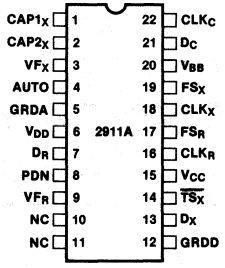

PIN NAMES

CAP 1_X, CAP 2_X	Holding Capacitor
VF_X	Analog Input
VF_R	Analog Output
D_R, D_C	Digital Input
D_X, $\overline{TS}_X$	Digital Output
CLK_C, CLK_X, CLK_R	Clock Input
FS_X, FS_R	Frame Sync Input
AUTO	Auto Zero Output
V_{BB}	Power (−5V)
V_{CC}	Power (+5V)
V_{DD}	Power (+12V)
PDN	Power Down
GRDA	Analog Ground
GRDD	Digital Ground
NC	No Connect

BLOCK DIAGRAM

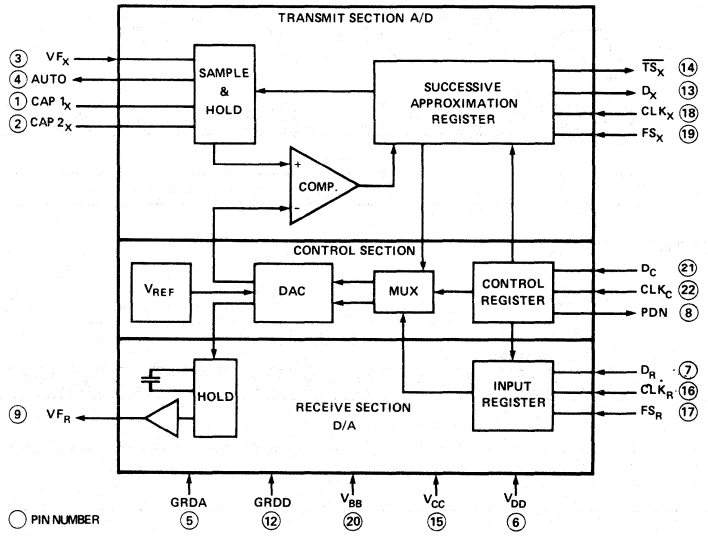

PIN DESCRIPTION

Pin No.	Symbol	Function	Description
1	$CAP1_X$	Hold	Connections for the transmit holding capacitor. Refer to Applications section.
2	$CAP2_X$		
3	VF_X	Input	Analog input to be encoded into a PCM word. The signal on this lead is sampled at the same rate as the transmit frame synchronization pulse FS_X, and the sample value is held in the external capacitor connected to the $CAP1_X$ and $CAP2_X$ leads until the encoding process is completed.
4	AUTO	Output	Most significant bit of the encoded PCM word (+5V for negative, −5V for positive values). Refer to the Codec Applications section.
5	GRDA	Ground	Analog return common to the transmit and receive analog circuits. Not connected to GRDD internally.
6	V_{DD}	Power	+12V ± 5%; referenced to GRDA.
7	D_R	Input	Receive PCM highway (serial bus) interface. The Codec serially receives a PCM word (8 bits) through this lead at the proper time defined by FS_R, CLK_R, D_C, and CLK_C.
8	PDN	Output	Active high when the Codec is in the power down mode. TTL interface. Open drain output.
9	VF_R	Output	Analog Output. The voltage present on VF_R is the decoded value of the PCM word received on lead D_R. This value is held constant between two conversions.
10	NC	No Connects	Recommended practice is to strap these NC's to GRDA.
11	NC		
12	GRDD	Ground	Ground return common to the logic power supply; V_{CC}.
13	D_X	Output	Output of the transmit side onto the send PCM highway (serial bus). The 8-bit PCM word is serially sent out on this pin at the proper time defined by FS_X, CLK_X, D_C, and CLK_C. TTL three-state output.
14	$\overline{TS_X}$	Output	Normally high, this signal goes low while the Codec is transmitting an 8-bit PCM word on the D_X lead. (Timeslot information used for diagnostic purposes and also to gate the data on the D_X lead.) TTL interface, open drain output.
15	V_{CC}	Power	+5V ± 5%, referenced to GRDD.
16	CLK_R	Input	Master receive clock defining the bit rate on the receive PCM highway. Typically 2.048 Mbps for a carrier system. Maximum rate 2.1 Mbps. 50% duty cycle. TTL compatible.
17	FS_R	Input	Frame synchronization pulse for the receive PCM highway. Resets the on-chip timeslot counter for the receive side. Maximum repetition rate 12 KHz. TTL interface.
18	CLK_X	Input	Master transmit clock defining the bit rate on the transmit PCM highway. Typically 2.048 Mbps for a carrier system. Maximum rate 2.1 Mbps. 50% duty cycle. TTL interface.
19	FS_X	Input	Frame synchronization pulse for the transmit PCM highway. Resets the on-chip timeslot counter for the transmit side. Maximum repetition rate 12 KHz. TTL interface.
20	V_{BB}	Power	−5V ± 5%, referenced to GRDA.
21	D_C	Input	Data input to program the Codec for the chosen mode of operation. Becomes an active low chip select when CLK_C is tied to V_{CC}. TTL interface.
22	CLK_C	Input	Clock input to clock in the data on the D_C lead when the timeslot assignment feature is used; tied to V_{CC} to disable this feature. TTL interface.

FUNCTIONAL DESCRIPTION

The 2911A PCM Codec provides the analog-to-digital and the digital-to-analog conversions necessary to interface a full duplex (4 wires) voice telephone circuit with the PCM highways of a time division multiplexed (TDM) system. The Codec is intended to be used on line and trunk terminations.

In a typical telephone system the Codec is located between the PCM highways and the channel filters.

The Codec encodes the incoming analog signal at the frame rate (FS_X) into an 8-bit PCM word which is sent out on the D_X lead at the proper time. Similarly, on the receive link, the Codec fetches an 8-bit PCM word from the receive highway (D_R lead) and decodes an analog value which will remain constant on lead VF_R until the next receive frame. Transmit and receive frames are independent. They can be asynchronous (transmission) or synchronous (switching) with each other.

Circuitry is provided within the Codec to internally define the transmit and receive timeslots. In small systems this may eliminate the need for any external timeslot exchange; in large systems it provides one level of concentration. This feature can be bypassed and discrete timeslots sent to each Codec within a system.

In the power-down mode, most functions of the Codec are directly disabled to reduce power dissipation to a minimum.

Typical Line Termination

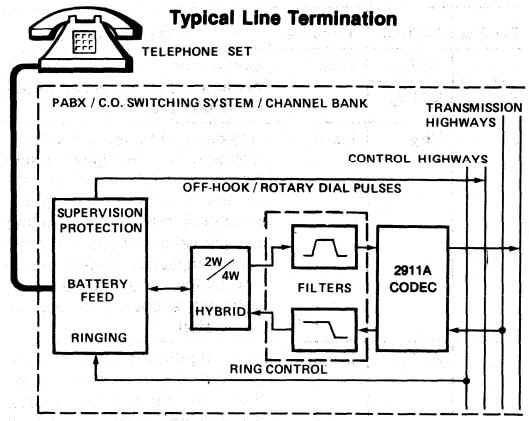

Functional Block Diagram of Line Circuit

CODEC OPERATION

Codec Control

The operation of the 2911A is defined by serially loading an 8-bit word through the D_C lead (data) and the CLK_C lead (clock). The loading is asynchronous with the other operations of the Codec, and takes place whenever transitions occur on the CLK_C lead. The D_C input is loaded in during the trailing edge of the CLK_C input.

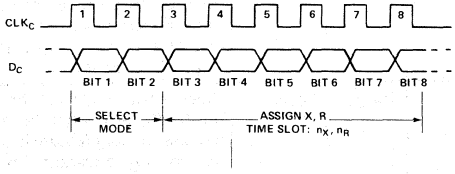

The control word contains two fields:

Bit 1 and Bit 2 define whether the subsequent 6 bits apply to both the transmit and receive side (00), the transmit side only (01), the receive side only (10), or whether the Codec should go into the standby, power-down mode (11). In the last case (11), the following 6 bits are irrelevant.

The last 6 bits of the control word define the timeslot assignment, from 000000 (timeslot 1) to 111111 (timeslot 64). Bit 3 is the most significant bit and bit 8 the least significant bit and last into the Codec.

Bit 1	Bit 2	Mode
0	0	X & R
0	1	X
1	0	R
1	1	Standby

Bit						
3	4	5	6	7	8	Time-Slot
0	0	0	0	0	0	1
0	0	0	0	0	1	2
		•				•
		•				•
		•				•
		•				•
1	1	1	1	1	1	64

The Codec will retain the control word (or words) until a new word is loaded in or until power is lost. This feature permits dynamic allocation of timeslots for switching applications.

Microcomputer Control Mode (2911A-1)

In the microcomputer mode, each Codec performs its own timeslot computation independently for the transmit and receive channels by counting clock pulses (CLK_X and CLK_R). All Codecs tied to the same data bus receive identical framing pulses (FS_X and FS_R). The framing pulses reset the on-chip timeslot counters every frame; hence the timeslot counters of all devices are synchronized. Each Codec is programmed via CLK_C and D_C for the desired transmit and receive timeslots according to the description in the Codec Control Section. All Codecs tied to the same D_R bus will, in general, have different receive timeslots, although that is not a device requirement. There may be separate busses for transmit and receive or all Codecs may transmit and receive over the same bus, in which case the transmit and receive channels must be synchronous ($CLK_X = CLK_R$). There are no other restrictions on timeslot assignments; a device may have the same transmit and receive timeslot even if a single bus is used.

There are several requirements for using the CLK_C-D_C interface in the microcomputer mode.

1. A complete timeslot assignment, consisting of eight negative transitions of CLK_C, must be made in less than one frame period. The assignment can overlap a framing pulse so long as all 8 control bits are clocked in within a total span of 125 μsec (for an 8 KHz frame rate). CLK_C must be left at a TTL low level when not assigning a timeslot.
2. A dead period of two frames must always be observed between successive timeslot assignments. The two frame delay is measured from the rising edge of the first CLK_C transition of the previous timeslot assigned.
3. When the device is in the power-down state a single control word will suffice to power-up the Codec and make a timeslot assignment. That is, the first assignment brings the device out of power-down and registers the timeslot information in the lower six bits of the control word.
4. Initialization sequence: The device contains an on-chip power-on clear function which guarantees that with proper sequencing of the supplies (V_{CC} or V_{DD} on last), the device will initialize with no timeslot assigned to either the transmit or receive channel. After a supply failure or whenever the supplies are applied, it is recommended that either power down assignment be made first, or the first timeslot assignment be a transmit timeslot or a transmit/receive timeslot. The consequence of making a receive timeslot assignment first, after supply application, is that the transmit channel will assume timeslot 1, potentially producing bus contention.
5. Transmit only/receive only operation is permitted provided that a power down assignment is made first. Otherwise, special circuits which use only one channel should be physically disconnected from the unused bus; this allows a timeslot to be made to an unused channel without consequence.

Example of Microcomputer Control Mode:

The two words 01000001 and 10000010 have been loaded into the Codec. The transmit side is now programmed for timeslot 2 and the receive side for timeslot 3. The Codec will output a PCM word on the transmit PCM highway (bus) during the timeslot 2 of the transmit frame, and will fetch a PCM word from the receive PCM highway during timeslot 3.

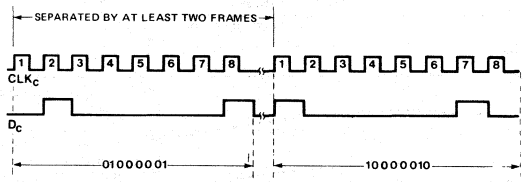

In this example the Codec interface to the PCM highway then functions as shown below. (FS_X and FS_R may be asynchronous.)

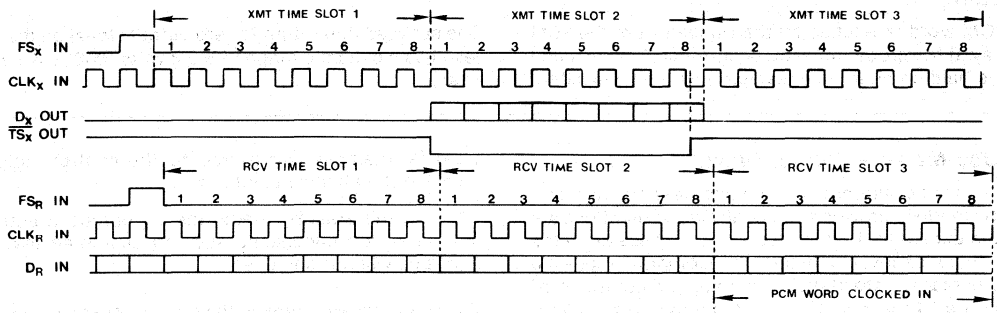

Direct Control Mode

The direct mode of operation will be selected when the CLK_C pin is strapped to the +5 volt supply (V_{CC}). In this mode, the D_C pin is an active low chip select. In other words, when D_C is low, the device transmits and receives in the timeslots which follow the appropriate framing pulses. With D_C high the device is in the power down state. Even though CLK_C characteristics are simpler for the 2911A it will operate properly when plugged into a 2911 board.

Deactivation of a channel by removal of the appropriate framing pulse (FS_X or FS_R) is generally not permitted.

Specifically, framing pulses must be applied for a minimum of two frames after a change in state of D_C in order for the D_C change to be internally sensed. In particular, when entering standby in the direct mode, framing pulses must be applied as usual for two frames after D_C is brought high. Thereafter, the framing pulses could, if desired, be removed until such time as the device is to be reactivated by the reapplication of framing pulses with D_C low.

The Codec will enter the direct mode within three frame times (375 μsec) as measured from the time the device power supplies settle to within the specified limits. This assumes that CLK_C is tied to V_{CC} and that all clocks are available at the time the supplies have settled.

General Control Requirements

All bit and frame clocks should be applied whenever the device is active. In particular, an unused channel cannot be deactivated by removal of its associated frame or bit clock while the other channel of the same device remains active.

A single channel cannot be deactivated except by physical disconnection of the data lead (D_X or D_R) from the system data bus. A device (both transmit and receive channels) may be deactivated in either control mode by powering down the device. Both channels are always powered down together.

Encoding

The VF signal to be encoded is input on the VF_X lead. An internal switch samples the signal and the hold function is performed by the external capacitor connected to the $CAP1_X$ and $CAP2_X$ leads. The sampling and conversion is synchronized with the transmit timeslot. The PCM word is then output on the D_X lead at the proper timeslot occurrence of the following frame. The A/D converter saturates at approximately ±2.2 volts RMS (±3.1 volts peak).

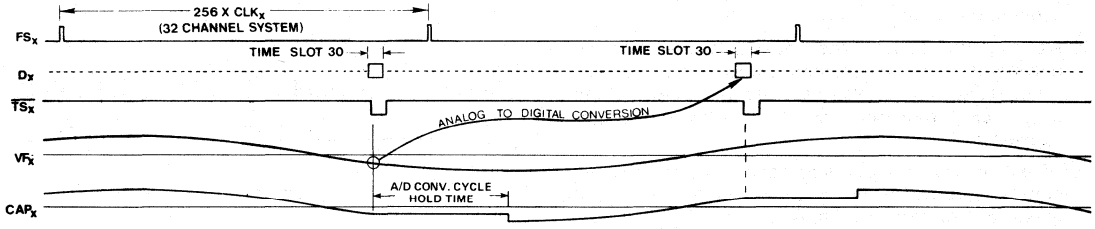

Decoding

The PCM word is fetched by the D_R lead from the PCM highway at the proper timeslot occurrence. The decoded value is held on an internal sample and hold capacitor.

The buffered non-return to zero output signal on the VF_R lead has a dynamic range of ±2.2 volts RMS (±3.1 volts peak).

Standby Mode — Power Down

To minimize power consumption and heat dissipation a standby mode is provided where all Codec functions are disabled except for D_C and CLK_C leads. These allow the Codec to be reactivated. In the microcomputer mode the Codec is placed into standby by loading a control word (D_C) with a "1" in bits 1 and 2 locations. In the direct mode when D_C is brought high, the all "1's" control word is internally transferred to the control register, invoking the standby condition.

While in the standby mode, the D_X output is actively held in a high impedance state to guarantee that the PCM bus will not be driven.

The power consumption in the standby mode is typically 33 mW.

Power-On Clear

Whether the device is used in the direct or microcomputer mode, an internal reset (power-on clear) is generated, forcing the device into the power down state, when power is supplied by any of the following methods. (1) Device power supplies are turned on in a system power-up situation where either V_{CC} or V_{DD} is applied last. (2) A large supply transient causes either of the two positive supplies to drop to approximately 2 volts. (3) A board containing Codecs is plugged into a

"hot" system where V_{CC} or V_{DD} is the last contact made. It may be necessary to trim back the edge connector pins or fingers on V_{CC} or V_{DD} relative to the other supply to guarantee that the power-on clear will operate properly when a board is plugged into a "hot" system. Furthermore, the Codec will inhibit activity on $\overline{TS}_X$ and D_X during the application of power supplies.

The device is also tolerant of transients in the negative supply (V_{BB}) so long as V_{BB} remains more negative than −3.5 volts. V_{BB} transients which exceed this level should be detected and followed by a system reinitialization.

Precision Voltage Reference for the D/A Converter

The voltage reference is generated on the chip and is calibrated during the manufacturing process. The technique uses the difference in sub-surface charge density between two suitably implanted MOS devices to derive a temperature stable and bias stable reference voltage.

A gain setting op amp, programmed during manufacturing, "trims" the reference voltage source to the final precision voltage reference value provided to the D/A converter. The precision voltage reference determines the initial gain and dynamic range characteristics described in the A.C. Transmission Specification section.

CONVERSION LAW

The conversion law is commonly referred to as the A Law.

The Codec provides a piecewise linear approximation of the logarithmic law through 13 segments. Each segment is made of 16 steps with the exception of the first segment, which has 32 steps. In adjacent segments the step sizes are in a ratio of two to one. Within each segment, the step size is constant.

The output levels are midway between the corresponding decision levels. The output levels y_n are related to the input levels x_n by the expression:

$$y_n = \frac{x_{n-1} + x_n}{2}, \quad 0 < n \leq 128$$

CODEC TRANSFER CHARACTERISTIC

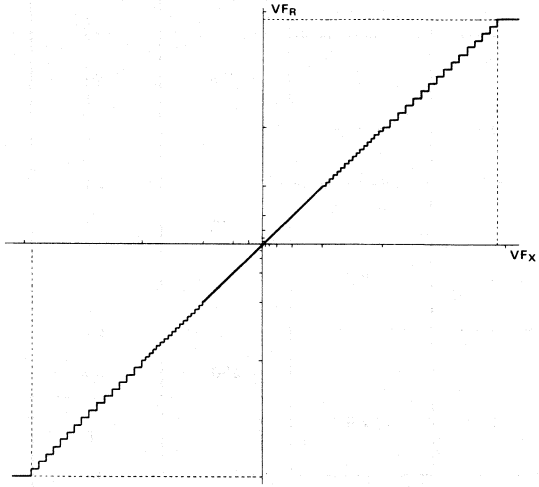

CODER TRANSFER CHARACTERISTIC
(A/D CONVERSION)

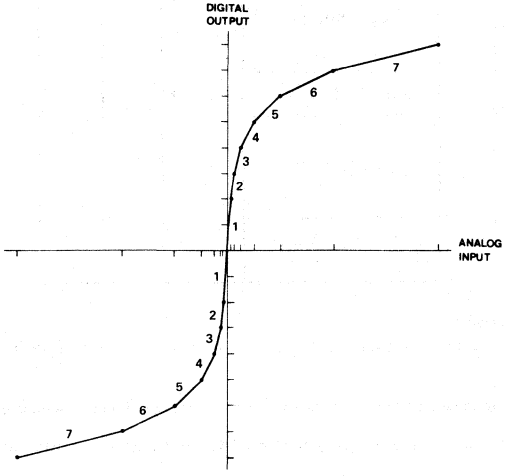

DECODER TRANSFER CHARACTERISTIC
(D/A CONVERSION)

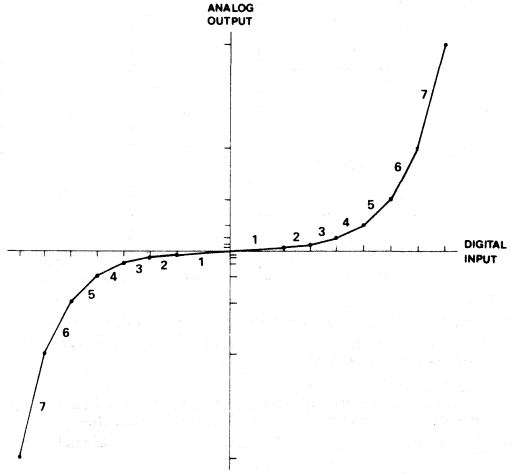

AFN-01457A

Theoretical A-Law — Positive Input Values (for Negative Input Values, Invert Bit 1)

1	2	3	4	5	6	7	8
Segment Number	No. of Steps x Step Size	Value at Segment End Points	Decision Value Number n	Decision Value x_n[1]	PCM Word[4] Bit Number 1 2 3 4 5 6 7 8	Normalized Value at Decoder Output y_n[5]	Decoder Output Value Number
		4096[3]	(128)	(4096)			
7	16 × 128		127	3968	1 1 1 1 1 1 1 1	4032	128
					(see Note 2)		
			113	2176	1 1 1 1 0 0 0 0	2112	113
6	16 × 64	2048	112	2048	(see Note 2)		
			97	1088	1 1 1 0 0 0 0 0	1056	97
5	16 × 32	1024	96	1024	(see Note 2)		
			81	544	1 1 0 1 0 0 0 0	528	81
4	16 × 16	512	80	512	(see Note 2)		
			65	272	1 1 0 0 0 0 0 0	264	65
3	16 × 8	256	64	256	(see Note 2)		
			49	136	1 0 1 1 0 0 0 0	132	49
2	16 × 4	128	48	128	(see Note 2)		
			33	68	1 0 1 0 0 0 0 0	66	33
1	32 × 2	64	32	64	(see Note 2)		
			1	2	1 0 0 0 0 0 0 0	1	1
			0	0			

Notes:

1. 4096 normalized value units correspond to the value of the on-chip voltage reference.
2. The PCM word corresponding to positive input values between two successive decision values numbered n and n + 1 (see column 4) is (128 + n) expressed as a binary number.
3. X_{128} is a virtual decision value.
4. The PCM word on the highways is the same as the one shown in column 6, with the even order bits inverted. The 2911A provides for the inversion of the even order bits on both the send and receive sections.
5. The voltage output on the VF_R lead is equal to the normalized value given in the table, augmented by an offset. The offset value is approximately 15 mV.

APPLICATIONS

Holding Capacitor

For an 8KHz sampling system the transmit holding capacitor CAP_X should be 2000pF ± 20%.

Circuit Interface — Without External Auto Zero

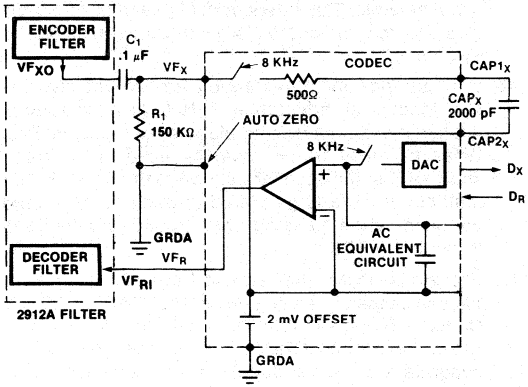

Filters Interface

The filters may be interfaced as shown in the circuit interface diagrams. Note that the output pulse stream is of the non-return-to-zero type and hence requires the (sin x)/x correction provided by the 2912A filter.

D_X Buffering

For higher drive capability or increased system reliability it may be desirable that the D_X output of a group of Codecs be buffered from the system PCM bus with an external three-state or open collector buffers. A buffer can be enabled with the appropriate Codec generated $\overline{TS_X}$ signal or signals. $\overline{TS_X}$ signal may also be used to activate external zero code suppression logic, since the occurrence of an active state of any $\overline{TS_X}$ implies the existence of PCM voice bits (as opposed to transparent data bits) on the bus.

Circuit Interface — With External Auto Zero

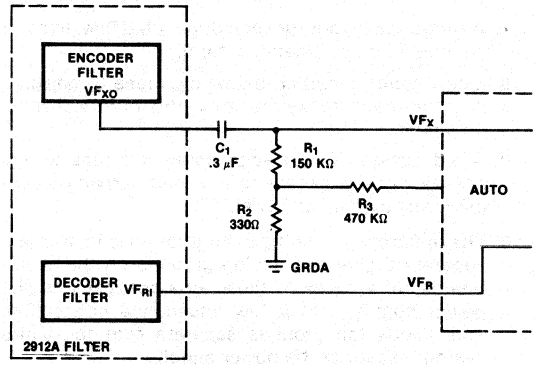

Auto Zero

The 2911A contains a transparent on-chip auto zero plus a device pin for implementing a sign-bit driven external auto zero feedback loop. The on-chip auto zero reduces the input offset voltage of the encoder (VF_X) to less than 3mV. For most telephony applications, this input offset is perfectly acceptable, since it insures the encoder is biased in the lower 25% of the first segment.

Where lower input offset is required the external auto zero loop may be used to bias the encoder exactly at the zero crossing point. The consequence of the external auto zero loop, aside from extra components, is the addition of the dithering auto-zero signal to the input signal, resulting in slightly higher idle channel noise (approximately 2dB) than when the external loop is not used. Consequently, where the application permits, it is recommended that the external auto zero loop not be used.

The circuit interface without external auto zero shows a possible connection between VF_X and AUTO leads with the recommended values of $C_1 = 0.1\,\mu F$ and $R_1 = 150\,K\Omega$.

The circuit interface with external auto zero drawing shows a possible connection between VF_X and AUTO leads with the recommended values of $C_1 = 0.3\,\mu F$, $R_1 = 150\,K\Omega$, $R_2 = 330\,\Omega$, and $R_3 = 470\,K\Omega$.

Grounding, Decoupling, and Layout Recommendations

The most important steps in designing a low noise line card are to insure that the layout of the circuit components and traces results in a minimum of cross coupling between analog and digital signals, and to provide well bypassed and clean power supplies, solid ground planes, and minimal lead lengths between components.

1. All power source leads should be bypassed to ground on each printed circuit board (PCB), on which codecs are provided. At least one electrolytic bypass capacitor (at least 10μF) per board is recommended at the point where all power traces from the codecs and filters join prior to interfacing with the edge connector pins assigned to the power leads.
2. When using two-sided PCBs, use both corresponding pins on opposite sides of the board for the same power lead. Strap them together both on the PCB and on the back of the edge connector.
3. Lay out the traces on codec- and filter-equipped boards such that analog signal and capacitor leads from the digital clock and data leads are separated as widely as possible.
4. Connect the codec sample and hold capacitor with the shortest leads possible. Mount it as close to the codec CAP1X, CAP2X pins as possible. Shield the capacitor traces with analog ground.
5. Do not lay out any board traces (especially digital) that pass between or near the leads of the sample and hold capacitor(s) since they are in high impedance circuits which are sensitive to noise coupling.
6. Keep analog voice circuit leads paired on their

layouts so that no intervening circuit leads are permitted to run parallel to them and/or between them.

7. Arrange the layout for each duplicated line, trunk or channel circuit in identical form.
8. Line circuits mounted extremely close to adjacent line circuits increase the possibility of interchannel crosstalk.
9. Avoid assignment of edge connector pins to any analog signal adjacent to any lead carrying digital (periodic) signals or power.
10. The optimum grounding configuration is to maintain separate digital and analog grounds on the circuit boards, and to carry these grounds back to the power supply with a low impedance connection. This keeps the grounds separate over the entire system except at the power supply.
11. The voltage difference between ground leads GRDA and GRDD (analog and digital ground) should not exceed two volts. One method of preventing any substantial voltage difference between leads GRDA and GRDD is to connect two diodes back to back in opposite directions across these two ground leads on each board. An additional or alternate method of suppressing ground lead noise is to bridge a RF choke of about 1 to 2 μH or greater, as space allows, between leads GRDA and GRDD on each board.
12. Codec-filter pairs should be aligned so that pins 9 through 16 of the filter face pins 1 through 12 of the codec. This minimizes the distance for analog connections between devices and with no crossing analog lines.
13. No digital or high voltage level (such as ringing supply) lines should run under or in parallel with these analog VF connections. If the analog lines are on the top (component side) of the PC board, then GRDD, GRDA, or power supply leads should be directly under them, on the bottom to prevent analog/digital coupling.
14. Both the codec and filter devices should be shielded from traces on the bottom of the PCB by using ground or power supply leads on the top side directly under the device (like a ground plane).
15. Two +5 volt power supply leads (V_{CC}) should be used on each PCM, one to the filters, the other to the codecs. These leads should be separately decoupled at the PCB where they then join to a single 5 volt supply at the backplane connector. Decoupling can be accomplished with either a series resistor/parallel capacitor (RC lowpass) or a series RF choke and parallel capacitor for each 5 volt lead. The capacitor should be at least 10 μF in parallel with a 0.1 μF ceramic. This filters both high and low frequencies and accommodates large current spikes due to switching.
16. Both grounds and power supply leads must have low resistance and inductance. This should be accomplished by using a ground plane whenever possible. When narrower traces must be used, a minimum width of 4 millimeters should be maintained. Either multiple or extra large plated through holes should be used when passing the ground connections through the PCB.
17. The 2912A PCM filter should have all power supplies bypassed to analog ground (GRDA). The 2911A Codec + 5V power supplies should be bypassed to the digital ground (GRDD). This is appropriate when separate + 5V power supply leads are used as suggested in item 15. The − 5V and + 12V supplies should be bypassed to analog ground (GRDA). Bypass capacitors at each device should be high frequency capacitors of approximately 0.1 to 1.0 μF value. Their lead lengths should be minimized by routing the capacitor leads to the appropriate ground plane under the device (either GRDA or GRDD).
18. Relay operation, ring voltage application, interruptions, and loop current surges can produce enormous transients. Leads carrying such signals must be routed well away from both analog and digital circuits on the line card and in backplanes. Lead pairs carrying current surges should be routed closely together to minimize possible inductive coupling. The microcomputer clock lead is particularly vulnerable, and should be buffered. Care should also be used in the backplane layout to prevent pick-up surges. Any other latching components (relay buffers, etc.) should also be protected from surges.

Absolute Maximum Ratings*

Temperature Under Bias ..... −10°C to +80°C
Storage Temperature ..... −65°C to +150°C
All Input or Output Voltages with Respect to V_{BB} ..... −0.3V to +20V
V_{CC}, V_{DD}, GRDA, and GRDA with Respect to V_{BB} ..... −0.3V to +20V
Power Dissipation 1.35W

***Comment:** Stresses above those listed under "Absolute Maximum Ratings" may cause permanent damage to the device. This is a stress rating only and functional operation of the device at these or any other conditions above those indicated in the operational sections of this specification is not implied. Exposure to absolute maximum rating conditions for extended periods may affect device reliability.*

D.C. and Operating Characteristics

$T_A = 0°C$ to $+70°C$, $V_{DD} = +12V \pm 5\%$, $V_{CC} = +5V \pm 5\%$, $V_{BB} = -5V \pm 5\%$, GRDA = 0V, GRDD = 0V, unless otherwise specified.

Symbol	Parameter	Limits			Unit	Test Conditions
		Min	Typ[1]	Max		
DIGITAL INTERFACE						
I_{IL}	Low Level Input Current			10	μA	$V_{IN} < V_{IL}$
I_{IH}	High Level Input Current			10	μA	$V_{IN} > V_{IH}$
V_{IL}	Input Low Voltage			0.6	V	
V_{IH}	Input High Voltage	2.2			V	
V_{OL}	Output Low Voltage			0.4	V	D_X, $I_{OL} = 4.0$ mA $\overline{TS_X}$, $I_{OL} = 3.2$ mA, open drain PDN, $I_{OL} = 1.6$ mA, open drain
V_{OH}	Output High Voltage	2.4			V	D_X, $I_{OH} = 15$ mA
ANALOG INTERFACE						
Z_{AI}	Input Impedance when Sampling, VF_X	125	300	500	Ω	In series with CAP_X to GRDA, $-3.1V < V_{IN} < 3.1V$
Z_{AO}	Small Signal Output Impedance, VF_R	100	180	300	Ω	$-3.1V < V_{OUT} < 3.1V$
V_{OR}	Output Offset Voltage at VF_R	−50		50	mV	Minimum code to D_R
V_{IX}	Input Offset Voltage at VF_X	−5		5	mV	Minimum positive code produced at D_X
V_{OL}	Output Low Voltage, Auto Zero		V_{BB}	$(V_{BB} + 2)$	V	400 KΩ to GRDA
V_{OH}	Output High Voltage, Auto Zero	$(V_{CC} - 2)$	V_{CC}		V	400 KΩ to GRDA
POWER DISSIPATION						
I_{DDO}	Standby Current		0.7	1.1	mA	clock frequency = 2.048 MHz
I_{CCO}	Standby Current		4.0	7.0	mA	
I_{BBO}	Standby Current		1.0	2.5	mA	
I_{DDI}	Operating Current		11	16	mA	
I_{CCI}	Operating Current		13	21	mA	
I_{BBI}	Operating Current		4.0	6.0	mA	

Notes:
1. Typical values are for $T_A = 25°C$ and nominal power supply values.

A.C. Characteristics

$T_A = 0°C$ to $+70°C$, $V_{DD} = +12V \pm 5\%$, $V_{CC} = +5V \pm 5\%$, $V_{BB} = -5V \pm 5\%$, GRDA = 0V, GRDD = 0V, unless otherwise specified.

Symbol	Parameter	Limits Min	Limits Typ[1]	Limits Max	Unit	Test Conditions
TRANSMISSION (any two Codecs, end-to-end, unless otherwise specified)						
S/D	Signal to Total Distortion Ratio. CCITT G.712 Method 1	TBD			dB	signal level −3dBm0 to −6dBm0
		TBD			dB	Signal level to −27dBm0
		TBD			dB	Signal level to −34dBm0
		TBD			dB	Signal level to −40dBm0
		TBD			dB	Signal level to −55 dBm0
S/D	Signal to Total Distortion Ratio. See Figure 2. CCITT G.712 Method 2	35			dB	Signal level 0dBm0 to −30dBm0
		29			dB	Signal level to −40dBm0
		24			dB	Signal level to −45dBm0
S/D	Signal to Total Distortion Ratio. CCITT G.712 Method 2 (Half Channel)	37			dB	Signal level 0dBm0 to −30dBm0
		31			dB	Signal level to −40dBm0
		26			dB	Signal level to −45dBm0
ΔG	Gain Tracking Deviation from Gain at -10dBm0. CCITT G.712 Method 2. (Half Channel)	SPECIFICATIONS UNDER REVISION, CONSULT INTEL REPRESENTATIVE			dB	Signal level +3dBm0 to −40dBm0
					dB	Signal level to −50 dBm0
					dB	Signal level to −55dBm0
N_{IC}	Idle Channel Noise		−85	−78	dBm0p	See Note 2
HD	Harmonic Distortion (2nd or 3rd)		−48	−44	dB	$VF_X = 1.02$KHz, 0dBm0; measured at decoder output VF_R
IMD_1	Intermodulation Distortion G.712 (8.1)			−45	dB	See Note 3
IMD_2	G.712 (8.2)			−50	dBm0	

Notes:

1. Typical values are for $T_A = 25°C$ and nominal power supply values.
2. If the external auto zero is used N_{IC} has a typical value of −76dBm0.
3. According to the two tone method. CCITT G.712 recommendation.

A.C. Characteristics (continued)

$T_A = 0°C$ to $+70°C$, $V_{DD} = +12V \pm 5\%$, $V_{CC} = +5V \pm 5\%$, $V_{BB} = -5V \pm 5\%$, GRDA = 0V, GRDD = 0V, unless otherwise specified.

Symbol	Parameter	Limits			Unit	Test Conditions
		Min	Typ[1]	Max		
GAIN AND DYNAMIC RANGE						
DmW	Digital Milliwatt Response	5.58	5.66	5.78	dBm	23°C, nominal supplies[4]
DmW_T	DmW_O Variation with Temperature		−0.001	−0.002	dB/°C	Relative to 23°C[4]
DmW_S	DmW_O Variation with Supplies			±0.07	dB	Supplies ±5%[4]
A_{IR}	Input Dynamic Range	2.17	2.20	2.23	V_{RMS}	Using D.C. and A.C. tests[5] 23°C, nominal supplies
A_{IRT}	Input Dynamic Range vs Temperature			−0.5	mV_{RMS}/°C	Relative to 23°C
A_{IRS}	Input Dynamic Range vs Supplies			±18	mV_{RMS}	Supplies ±5%
A_{OR}	Output Dynamic Range, VF_R	2.14	2.17	2.20	V_{RMS}	23°C, nominal supplies
A_{ORT}	A_{OR} Variation with Temperature			−0.5	mV_{RMS}/°C	Relative to 23°C
A_{ORS}	A_{OR} Variation with Supplies			±18	mV_{RMS}	Supplies ±5%
SUPPLY REJECTION AND CROSSTALK						
$PSRR_1$	V_{DD} Power Supply Rejection Ratio	50			dB	decoder alone[6]
$PSRR_2$	V_{BB} Power Supply Rejection Ratio	35			dB	decoder alone[6]
$PSRR_3$	V_{CC} Power Supply Rejection Ratio	50			dB	decoder alone[6]
$PSRR_4$	V_{DD} Power Supply Rejection Ratio	50			dB	encoder alone[7]
$PSRR_5$	V_{BB} Power Supply Rejection Ratio	45			dB	encoder alone[7]
$PSRR_6$	V_{CC} Power Supply Rejection Ratio	50			dB	encoder alone[7]
CT_R	Crosstalk Isolation, Receive Side	75	80		dB	See Note 8
CT_T	Crosstalk Isolation, Transmit Side	75	80		dB	See Note 9
CAPX	Input Sample and Hold Capacitor	1600	2000	2400	pF	

Notes:

4. D_R of Device Under Test (D.U.T.) driven with repetitive digital word sequence specified in CCITT recommendation G.711. Measurement made at VF_R output.
5. With the D.C. method the positive and negative clipping levels are measured and A_{IR} is calculated. With the A.C. method a sinusoidal input signal to VF_X is used where A_{IR} is measured directly.
6. D.U.T. decoder; impose 200 mV_{P-P}, 1.02 KHz on appropriate supply; measurement made at decoder output; decoder in idle channel conditions.
7. D.U.T. encoder, impose 200 mV_{P-P}, 1.02 KHz on appropriate supply; measurement made at encoder output; encoder in idle channel conditions.
8. VF_X of D.U.T. encoder = 1.02 KHz, 0 dBm0. Decoder under quiet channel conditions; measurement made at decoder output.
9. $VF_X = 0$ Vrms. Decoder = 1.02 KHz, 0 dBm0. Encoder under quiet channel conditons; measurement made at encoder output.

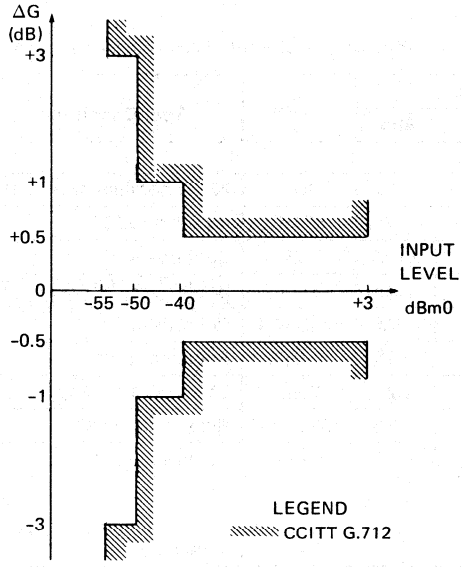

Figure 1. Gain Variation (ΔG) vs. Signal Level

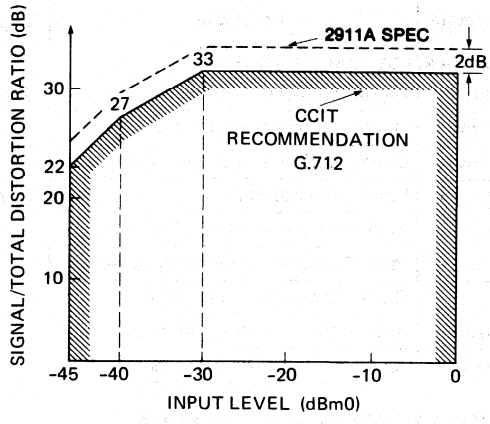

Figure 2. Signal/Total Distortion Ratio, End-to-End

A.C. Characteristics — Timing Specification and Waveforms[1]

$T_A = 0°C$ to $+70°C$, $V_{DD} = +12V \pm 5\%$, $V_{CC} = +5V \pm 5\%$, $V_{BB} = -5V \pm 5\%$, GRDA = 0V, GRDD = 0V, unless otherwise specified.

Symbol	Parameter	Limits Min	Limits Max	Units	Comments
CLOCK SECTION					
t_{CY}	Clock Period	485		ns	CLK_X, CLK_R (2.048 MHz systems), CLK_C
t_r, t_f	Clock Rise and Fall Time	0	30	ns	CLK_X, CLK_R, CLK_C
t_{CLK}	Clock Pulse Width	215		ns	CLK_X, CLK_R, CLK_C
t_{CDC}	Clock Duty Cycle ($t_{CLK} \div t_{CY}$)	45	55	%	CLK_X, CLK_R
TRANSMIT SECTION					
t_{VFX}	Analog Input Conversion	20		timeslot	from leading edge of transmit timeslot[2]
t_{DZX}	Data Enabled on TS Entry	50	180	ns	$0 < C_{LOAD} < 100$ pF
t_{DHX}	Data Hold Time	80	230	ns	$0 < C_{LOAD} < 100$ pF
t_{HZX}	Data Float on TS Exit	75	245	ns	$C_{LOAD} = 0$
t_{SON}	Timeslot X to Enable	30	185	ns	$0 < C_{LOAD} < 100$ pF
t_{SOFF}	Timeslot X to Disable	70	225	ns	$C_{LOAD} = 0$
t_{FSD}	Frame Sync Delay	15	150	ns	
RECEIVE AND CONTROL SECTIONS					
t_{VFR}	Analog Output Update	9 1/16	9 1/16	timeslot	from leading edge of the channel timeslot
t_{DSR}	Receive Data Setup	20		ns	
t_{DHR}	Receive Data Hold	60		ns	
t_{FSD}	Frame Sync Delay	15	150	ns	
t_{DSC}	Control Data Setup	100		ns	Microcomputer mode only
t_{DHC}	Control Data Hold	100		ns	Microcomputer mode only

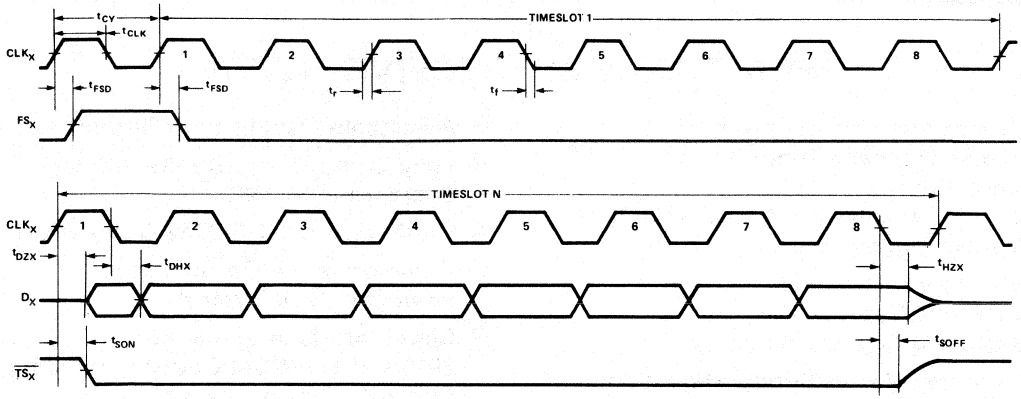

Notes:

1. All timing parameters referenced to 1.5V, except t_{HZX} and t_{SOFF}, which reference a high impedance state.
2. The 20 timeslot minimum insures that the complete A/D conversion will take place under any combination of receive interrupt or asynchronous operation of the Codec. Consult an Intel applications specialist or Intel Corporation for applications information which would allow operation with less than 20 timeslots.

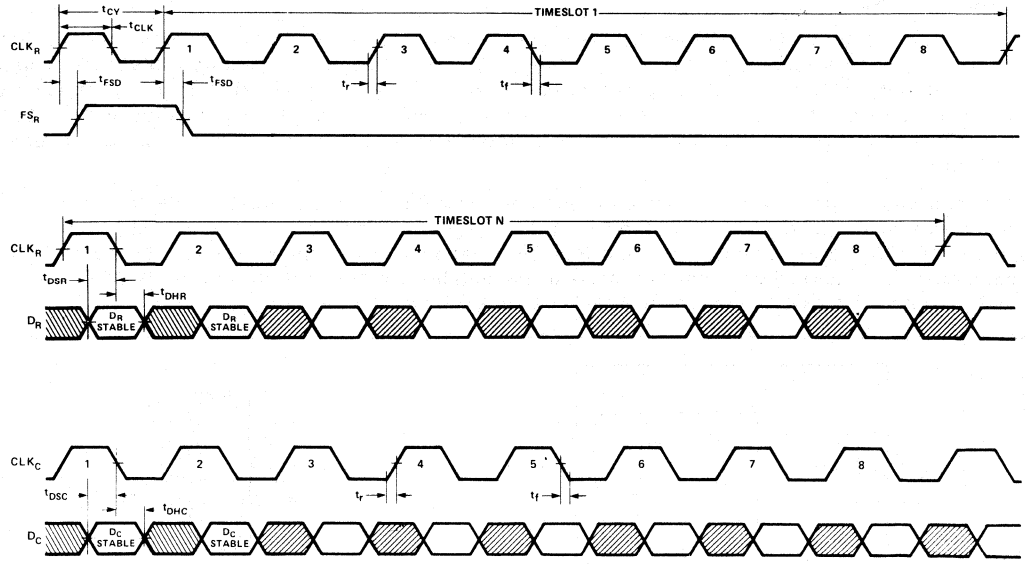

Notes:

1. All timing parameters referenced to 1.5V, except t_{HZX} and t_{SOFF} which reference a high impedance state.

PRELIMINARY

2912A
PCM TRANSMIT/RECEIVE FILTER

- **Low Power Consumption:**
  60mW Typical without Power Amplifiers
  80mW Typical with Power Amplifiers
  0.5mW Typical Standby
- **Low Idle Channel Noise:**
  2 dBrnc0 Typical, Receive
  6 dBrnc0 Typical, Transmit
- **Excellent Power Supply Rejection:**
  40dB Typical on V_{CC} @ 50kHz
  30dB Typical on V_{BB} @ 50kHz
- **High Pass Filter Rejects Low Frequency Noise:**
  23dB @ 60Hz
  25dB @ 50Hz
  50dB @ 16Hz
- **Adjustable Gain in Both Directions**
- **Fully Compatible with the Industry Standard Intel 2912**
- **D3/D4 and CCITT G712 Compatible**
- **Common Mode Op Amp Input Rejection 75dB Typical**
- **Direct Interface to the Intel 2910A/2911A PCM Codecs Including Stand-By Power Down Mode**
- **Direct Interface with Transformer or Electronic Hybrids**
- **Fabricated with Reliable N-Channel MOS Process**

The Intel 2912A 2nd generation PCM line filter is a fully integrated monolithic device containing the two filters of a PCM line or trunk termination. It has improved key parameters of power consumption, idle channel noise, and power supply rejection. A single part exceeds both AT&T D3/D4 and CCITT transmission specs, exceeds digital Class 5 central office switching system stringent specifications, and is fully compatible with the 2912. The primary application for the 2912A is in telephone systems for transmission, switching, or remote concentration.

An advanced version of the switched capacitor technique used for the 2912 is used to implement the transmit and receive passband filter sections of the 2912A. The device is fabricated using Intel's reliable two layer polysilicon gate NMOS technology. (See Intel Reliability Report RR-24 on the 2910A, 2911A, and 2912.) The combination of advances in the switched capacitor techniques first used on the 2912 and the NMOS technology results in a monolithic 2912A filter which is packaged in a standard 16-pin DIP.

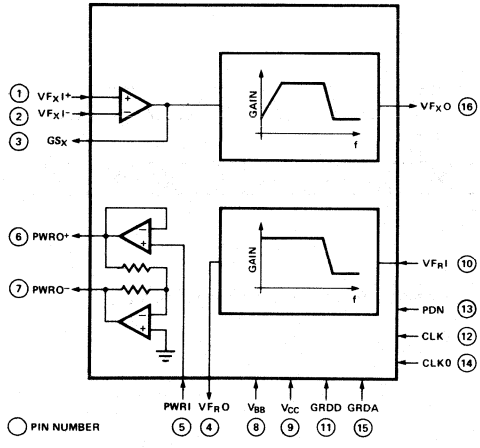

Figure 1. Block Diagram

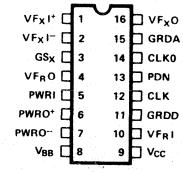

PIN NAMES

VF_XI^+, VF_XI^-	ANALOG INPUTS	CLK	CLOCK INPUT
GS_X	GAIN CONTROL	CLK0	CLOCK SELECTION
VF_XO	ANALOG OUTPUT	PDN	POWER DOWN
VF_RI	ANALOG INPUT	V_{CC}	POWER (+5V)
VF_RO	ANALOG OUTPUT	V_{BB}	POWER (-5V)
PWRI	DRIVER INPUT	GRDD	DIGITAL GROUND
$PWRO^+$, $PWRO^-$	DRIVER OUTPUT	GRDA	ANALOG GROUND

Figure 2. Pin Configuration

AT&T is a registered trademark of American Telephone and Telegraph Corporation.

Table 1. Pin Description

Symbol	Pin No.	Function	Description
VF_XI+	1	Input	Analog input of the transmit filter. The VF_XI+ signal comes from the 2 to 4 wire hybrid in the case of a 2 wire line and goes through the frequency rejection and the antialiasing filters before being sent to the Codec for encoding.
VF_XI-	2	Input	Inverting input of the gain adjustment operational amplifier on the transmit filter.
GS_X	3	Output	Output of the gain adjustment operational amplifier on the transmit filter. Used for gain setting of the transmit filter.
VF_RO	4	Output	Analog output of the receive filter. This output provides a direct interface to electronic hybrids. For a transformer hybrid application, VF_RO is tied to PRWI and a dual balanced output is provided on pins PWRO+ and PWRO-.
PWRI	5	Input	Input to the power driver amplifiers on the receive side for interface to transformer hybrids. High impedance input. When tied to V_{BB}, the power amplifiers are powered down.
PWRO+	6	Output	Non-inverting side of the power amplifiers. Power driver output capable of directly driving transformer hybrids.
PWRO-	7	Output	Inverting side of the power amplifiers. Power driver output capable of directly driving transformer hybrids.
V_{BB}	8	Power	-5V ±5% referenced to GRDA
V_{CC}	9	Power	+5V ±5% referenced to GRDA
VF_RI	10	Input	Analog input of the receive filter, interface to the Codec analog output for PCM applications. The receive filter provides the $\frac{Sinx}{x}$ correction needed for sample and hold type Codec outputs to give unity gain. The input voltage range is directly compatible with the Intel 2910A and 2911A Codecs.
GRDD	11	Ground	Digital ground return for internal clock generator.
CLK(1)	12	Input	Clock input. Three clock frequencies can be used: 1.536MHz, 1.544MHz or 2.048MHz; pin 14, CLK0, has to be strapped accordingly. High impedance input, TTL voltage levels.
PDN	13	Input	Control input for the stand-by power down mode. An internal pull up to +5V is provided for interface to the Intel 2910A and 2911A PDN outputs. TTL voltage levels.
CLK0(1)	14	Input	Clock (pin 12, CLK) frequency selection. If tied to V_{BB}, CLK should be 1.536MHz. If tied to Ground, CLK should be 1.544 MHz. If tied to V_{CC}, CLK should be 2.048MHz.
GRDA	15	Ground	Analog return common to the transmit and receive analog circuits. Not connected to GRDD internally.
VF_XO	16	Output	Analog output of the transmit filter. The output voltage range is directly compatible with the Intel 2910A and 2911A Codecs.

NOTE:

1. The three clock frequencies are directly compatible with the Intel 2910A and 2911A Codecs. The following table should be observed in selecting the clock frequency.

Codec Clock	Clock Bits/Frame	CLK, Pin 12	CLK0, Pin 14
1.536 MHz	192	1.536 MHz	V_{BB} (-5V)
1.544 MHz	193	1.544 MHz	GRDD
2.048 MHz	256	2.048 MHz	V_{CC} (+5V)

FUNCTIONAL DESCRIPTION

The 2912A provides the transmit and receive filters found on the analog termination of a PCM line or trunk. The transmit filter performs the anti-aliasing function needed for an 8KHz sampling system, and the 50/60Hz rejection. The receive filter has a low pass transfer characteristic and also provides the Sinx/x correction necessary to interface the Intel 2910A (μ Law) and 2911A (A Law) Codecs which have a non-return-to-zero output of the digital to analog conversion. Gain adjustment is provided in the receive and transmit directions.

A stand-by, power down mode is included in the 2912A and can be directly controlled by the 2910A/2911A Codecs.

The 2912A can interface directly with a transformer hybrid (2 to 4 wire conversion) or with electronic hybrids; in the latter case the power dissipation is reduced by powering down the output amplifier provided on the 2912A.

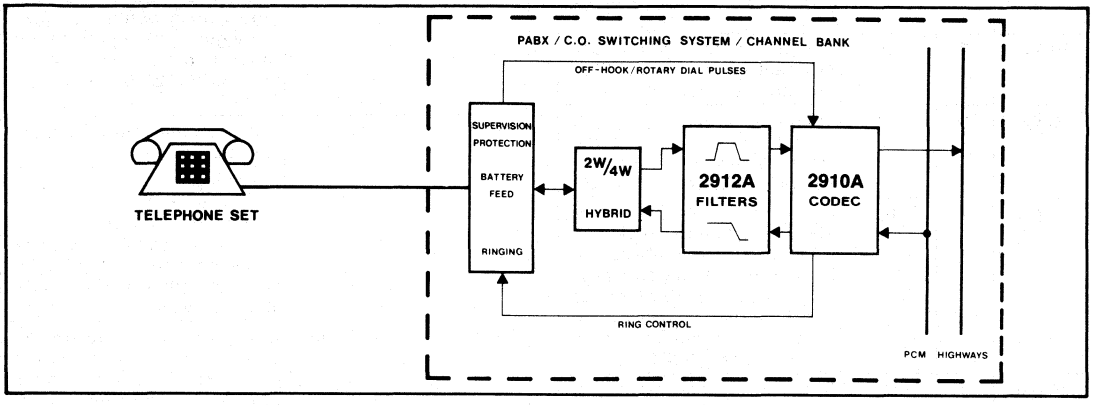

Figure 3. Typical Line Termination

FILTER OPERATION

Transmit Filter Input Stage

The input stage provides gain adjustment in the pass-band. The input operational amplifier has a common mode range of ±2.2 volts, a DC offset of less than 25mV, a voltage gain greater than 3000 and a unity gain bandwidth of 1 MHz. It can be connected to provide a gain of 20dB without degrading the noise performance of the filter. The load impedance connected to the amplifier output must be greater than 10KΩ in parallel with 25 pF. The input signal on lead VF_XI+ can be either AC or DC coupled. The input Op Amp can also be used in the inverting mode or differential amplifier mode. The remaining portion of the transmit filter provides a gain of +3dB in the pass band.

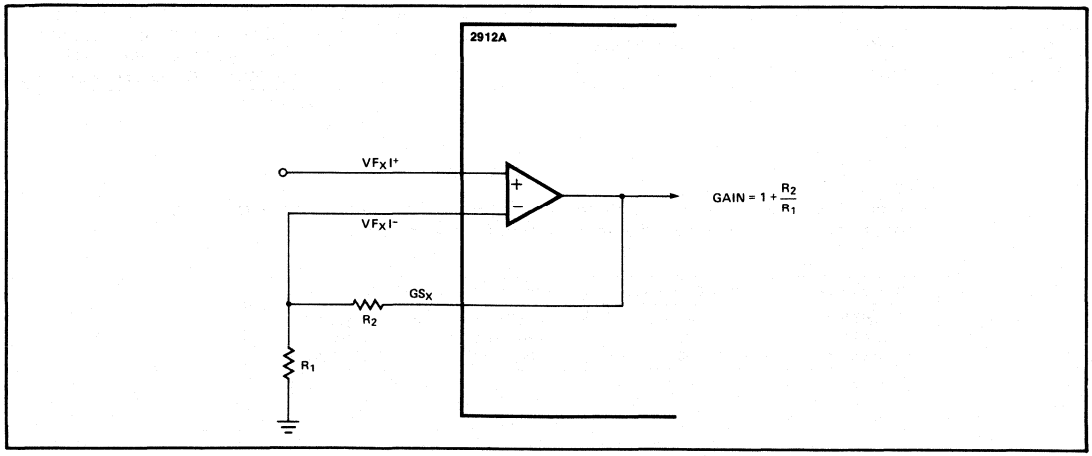

Figure 4. Transmit Filter Gain Adjustment

Receive Filter Output

The VF_RO lead is capable of driving high impedance electronic hybrids. The gain of the receive section from VF_RI to VF_RO is:

$$\frac{\left(\frac{\pi f}{8000}\right)}{\text{Sin}\left(\frac{\pi f}{8000}\right)}$$

which when multiplied by the output response of the Intel 2910A and 2911A Codecs results in a 0dB gain in the pass band. The filter gain can be adjusted downward by a resistor voltage divider connected as shown. The total resistive load R_T on VF_RO should not be less than 10kΩ.

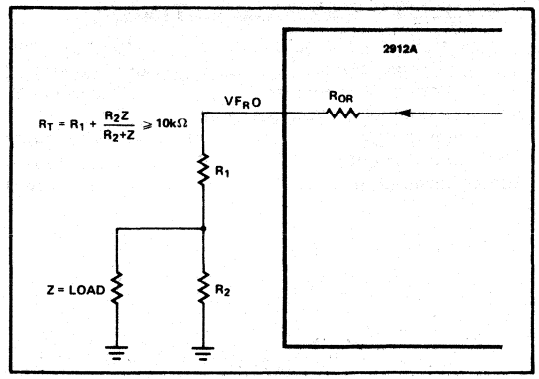

Figure 5. Receive Filter Output Gain Adjustment

Receive Filter Output Driver Amplifier Stage

A balanced power amplifier is provided in order to drive low-impedance loads in a bridged configuration. The receive filter output VF_RO is connected through gain setting resistors R_1 and R_2 to the amplifier input PWRI. The input voltage range on PWRI is ±3.2 volts and the gain is 6dB for a bridged output. With a 20kΩ load connected between PWRO+ and PWRO-, the maximum voltage swing across the load is ±5.0 volts. The series combination of R_S and the hybrid transformer must present a minimum A.C. load resistance of 600Ω to the amplifier in the bridged configuration. A typical connection of the output driver amplifiers is shown below. These amplifiers can also be used with loads connected to ground.

When the power amplifier is not needed it should be deactivated to save power. This is accomplished by tying the PWRI pin to V_{BB} before the device is powered up.

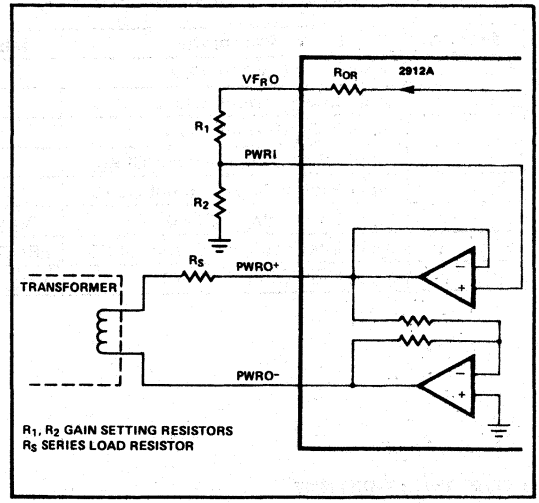

Figure 6. Typical Connection of Output Driver Amplifier

Power Down Mode

Pin 13, PDN, provides the power down control. When the signal on this lead is brought high, the 2912A goes into a standby, power down mode. Power dissipation is reduced to 0.5mW. In the stand-by mode, all outputs go into a high impedance state. This feature allows multiple 2912As to drive the same analog bus on a time-shared basis.

When power is restored, the settling time of the 2912A is typically 15ms.

The PDN interface is directly compatible with the Intel 2910A and 2911A PDN outputs. Only one command from the common control is then necessary to power down both the Codec and the Filters of the line or trunk interface.

ABSOLUTE MAXIMUM RATINGS*

Temperature Under Bias ..... -10° C to +80° C
Storage Temperature ..... -65° C to +150° C
Supply Voltage with Respect to V_{BB} ... -0.3V to +14.0V
All Input and Output Voltages with
Respect to V_{BB} ..... -0.3V to +14.0V
All Output Currents ..... ±50mA
Power Dissipation ..... 1 Watt

NOTICE: Stresses above those listed under "Absolute Maximum Ratings" may cause permanent damage to the device. This is a stress rating only and functional operation of the device at these or any other conditions above those indicated in the operational sections of this specification is not implied. Exposure to absolute maximum rating conditions for extended periods may affect device reliability.

D.C. CHARACTERISTICS

(T_A = 0° C to +70° C; V_{CC} =5V ±5%; V_{BB} = -5V ±5%; GRDA = 0V; GRDD = 0V; unless otherwise specified.)

DIGITAL INTERFACE (CLK, CLK0, and PDN Pins)

Symbol	Parameter	Min	Typ(1)	Max	Unit	Test Conditions
I_{LIC}	Input Load Current, CLK			10	μA	V_{IN} = V_{IL} MIN to V_{IH} MAX
I_{LIO}	Input Load Current, CLK0			10	μA	V_{IN} = V_{BB} to V_{IH} MAX
I_{LIP}	Input Load Current, PDN			-100	μA	V_{IN} = V_{IL} MIN to V_{IH} MAX
V_{IL}	Input Low Voltage (except CLK0)			0.8	V	
V_{IH}	Input High Voltage (except CLK0)	2.0			V	
V_{IL0}	Input Low Voltage, CLK0	V_{BB}		$V_{BB}^{+0.5}$	V	
V_{II0}	Input Intermediate Voltage, CLK0	$GRDD^{-0.5}$		0.8	V	
V_{IH0}	Input High Voltage, CLK0	$V_{CC}^{-0.5}$		V_{CC}	V	

POWER DISSIPATION

Symbol	Parameter	Min	Typ(1)	Max	Unit	Test Conditions
I_{CC0}	V_{CC} Standby Current		50	100	μA	PDN = V_{IH} MIN
I_{BB0}	V_{BB} Standby Current		50	100	μA	PDN = V_{IH} MIN
I_{CC1}	V_{CC} Operating Current, Power Amplifiers Inactive		6	10	mA	PWRI = V_{BB}
I_{BB1}	V_{BB} Operating Current, Power Amplifiers Inactive		6	10	mA	PWRI = V_{BB}
I_{CC2}	V_{CC} Operating Current		8	14	mA	
I_{BB2}	V_{BB} Operating Current		8	14	mA	

NOTE:
1. Typical values are for T_A = 25° C and nominal power supply values.

D.C. CHARACTERISTICS

(T_A = 0°C to +70°C; V_{CC} = +5V ±5%; V_{BB} = -5V ±5%; GRDA = 0V; GRDD = 0V; unless otherwise specified.)

ANALOG INTERFACE, TRANSMIT FILTER INPUT STAGE

Symbol	Parameter	Min	Typ(1)	Max	Unit	Test Conditions
I_{BXI}	Input Leakage Current, VF_XI+, VF_XI-			100	nA	$-2.2V < V_{IN} < 2.2V$
R_{IXI}	Input Resistance, VF_XI+, VF_XI-	10			MΩ	
V_{OSXI}	Input Offset Voltage, VF_XI+, VF_XI-			25	mV	$-2.2V < V_{IN} < 2.2V$
$CMRR_1$	Common Mode Rejection, VF_XI+, VF_XI-	60	75		dB	$-2.2V < V_{IN} < -2.2V$, 0dBmO≡ $1.1V_{RMS}$, Input at VF_XI-
$CMRR_2$	Common Mode Rejection, VF_XI+, VF_XI-	40			dB	$-2.2V < V_{IN} < 2.2V$
A_{VOL}	DC Open Loop Voltage Gain, GS_X	3000				
f_C	Open Loop Unity Gain Bandwidth, GS_X		1		MHz	
V_{OXI}	Output Voltage Swing, GS_X	±2.5			V	$R_L \geq 10k\Omega$
C_{LXI}	Load Capacitance, GS_X			25	pF	
R_{LXI}	Minimum Load Resistance, GS_X	10			kΩ	Minimum R_L

ANALOG INTERFACE, TRANSMIT FILTER (See Figure 10)

Symbol	Parameter	Min	Typ(1)	Max	Unit	Test Conditions
R_{OX}	Output Resistance, VF_XO		20	35	Ω	
V_{OSX}	Output DC Offset, VF_XO			100	mV	VF_XI+ Connected to GRDA, Input Op Amp at Unity Gain
$PSRR_1$	Power Supply Rejection of V_{CC} at 1kHz, VF_XO	30	40		dB	Note 2
$PSRR_2$	Power Supply Rejection of V_{BB} at 1kHz, VF_XO	25	30		dB	Note 2
C_{LX}	Load Capacitance, VF_XO			25	pF	
R_{LX}	Minimum Load Resistance, VF_XO	10			kΩ	Minimum R_L
V_{OX}	Output Voltage Swing, 1kHz, VF_XO	±3.2			V	$R_L \geq 10k\Omega$ or with 2910A or 2911A

ANALOG INTERFACE, RECEIVE FILTER (See Figure 9)

Symbol	Parameter	Min	Typ(1)	Max	Unit	Test Conditions
I_{BR}	Input Leakage Current, VF_RI			3	μA	$-3.2V < V_{IN} < 3.2V$
R_{IR}	Input Resistance, VF_RI	1			MΩ	
R_{OR}	Output Resistance, VF_RO			100	Ω	
V_{OSR}	Output DC Offset, VF_RO			100	mV	VF_RI Connected to GRDA
$PSRR_3$	Power Supply Rejection of V_{CC} at 1kHz, VF_RO	30	45		dB	
$PSRR_4$	Power Supply Rejection of V_{BB} at 1kHz, VF_RO	30	35		dB	
C_{LR}	Load Capacitance, VF_RO			25	pF	
R_{LR}	Minimum Load Resistance, VF_RO	10			kΩ	Minimum R_L
V_{OR}	Output Voltage Swing, VF_RO	±3.2			V	R_L = 10kΩ

NOTE:
1. Typical values for T_A = 25°C and nominal power supply values.
2. $PSRR_{1,2}$ include input op amp in transmit section.

D.C. CHARACTERISTICS

(T_A = 0°C to +70°C; V_{CC} = +5V ±5%; V_{BB} = -5V ±5%; GRDA = 0V; GRDD = 0V; unless otherwise specified.)

ANALOG INTERFACE, RECEIVE FILTER DRIVER AMPLIFIER STAGE

Symbol	Parameter	Min	Typ(1)	Max	Unit	Test Conditions	
I_{BRA}	Input Leakage Current, PWRI			3	μA	$-3.2V < V_{IN} < 3.2V$	
R_{IRA}	Input Resistance, PWRI	10			MΩ		
R_{ORA}	Output Resistance, PWRO+, PWRO-		1		Ω	$\|I_{OUT}\| < 10mA$ $-3.0V < V_{OUT} < 3.0V$	
V_{OSRA}	Output DC Offset, PWRO+, PWRO-			50	mV	PWRI Connected to GRDA	
C_{LRA}	Load Capacitance, PWRO+, PWRO-			100	pF		
V_{ORA1}	Output Voltage Swing Across R_L,	±3.2			V	R_L = 10kΩ	R_L Connected to GRDA
	PWRO+, PWRO- Single Ended	±2.9			V	R_L = 600Ω	
	Connection	±2.5			V	R_L = 300Ω	
V_{ORA2}	Differential Output Voltage Swing,	±6.4			V	R_L = 20kΩ	R_L Connected Between PWRO+ and PWRO-
	PWRO+, PWRO-	±5.8			V	R_L = 1200Ω	
	Balanced Output Connection	±5.0			V	R_L = 600Ω	

A.C. CHARACTERISTICS (T_A = 0°C to +70°C; V_{CC} = +5V ±5%; V_{BB} = -5V ±5%; GRDA = 0V; GRDD = 0V; unless otherwise specified.)

Clock Input Frequency: CLK = 1.536MHz ±0.1%; CLK0 = V_{IL0} (Tied to V_{BB}) CLK = 2.048MHz ±0.1%; CLK0 = V_{IH0} (Tied to V_{CC})
CLK = 1.544MHz ±0.1%; CLK0 = V_{IL0} (Tied to GRDD)

TRANSMIT FILTER TRANSFER CHARACTERISTICS (See Transmit Filter Transfer Characteristics, Figure 7)

Symbol	Parameter	Min	Typ(1)	Max	Unit	Test Conditions
G_{RX}	Gain Relative to Gain at 1kHz					0dBmO Input Signal
	16.67Hz		-56	-50	dB	Gain Setting Op Amp at
	50Hz			-25	dB	Unity Gain
	60Hz			-23	dB	
	200Hz	-1.0		-0.125	dB	0dBmO Signal ≡ 1.1 V_{RMS}
	300Hz to 3000Hz	-0.125		0.125	dB	Input at VF_XI-
	3300Hz	-.35		0.03	dB	
	3400Hz	-0.7		-0.1	dB	0dBmO Signal ≡ 1.6 V_{RMS}
	4000Hz			-14	dB	Output at VF_XO
	4600Hz and Above			-32	dB	
G_{AX}	Absolute Passband Gain at 1kHz, VF_XO	2.9	3.0	3.1	dB	$R_L = \infty$, Note 3
G_{AXT}	Gain Variation with Temperature at 1kHz		.0002	.002	dB/°C	0dBmO Signal Level
G_{AXS}	Gain Variation with Supplies at 1kHz		.01	.07	dB/V	0dBmO Signal Level, Supplies ±5%
CTR_T	Cross Talk, Receive to Transmit, Measured at VF_XO $20 \log \frac{VF_XO}{VF_RO}$		-75	-65	dB	VF_RI = 1.6 V_{RMS}, 1kHz Input VF_XI+, VF_XI- Connected to GS_X, GS_X Connected through 10kΩ to GRDA
N_{CX1}	Total C Message Noise at Output, VF_XO		6	11	dBrnc0 |2|	Gain Setting Op Amp at Unity Gain
N_{CX2}	Total C Message Noise at Output, VF_XO		9	13	dBrnc0 |2|	Gain Setting Op Amp at 20dB Gain-
D_{DX}	Differential Envelope Delay, VF_XO 1kHz to 2.6kHz			60	μs	
D_{AX}	Absolute Delay at 1kHz, VF_XO			110	μs	
DP_{X1}	Single Frequency Distortion Products			-48	dB	0dBm Input Signal at 1kHz
DP_{X2}	Single Frequency Distortion Products at Maximum Signal Level of +3dBm0 at VF_XO			-45	dB	0.16 V_{RMS} 1kHz Input Signal at VF_XI+; Gain Setting Op Amp at 20dB Gain. The +3dBmO signal at VF_XO is 2.26 V_{RMS}

See next page for **NOTES.**

A.C. CHARACTERISTICS

(T_A = 0°C to +70°C; V_{CC} = +5V ±5%; V_{BB} = -5V ±5%; GRDA = 0V; GRDD = 0V; unless otherwise specified.)
Clock Input Frequency: CLK = 1.536MHz ±0.1%; CLK0 = V_{IL0} (Tied to V_{BB})
CLK = 1.544MHz ±0.1%; CLK0 = V_{IL0} (Tied to GRDD)
CLK = 2.048MHz ±0.1%; CLK0 = V_{IH0} (Tied to V_{CC})

RECEIVE FILTER TRANSFER CHARACTERISTICS (See Receive Filter Transfer Characteristics, Figure 8)

Symbol	Parameter	Min	Typ(1)	Max	Unit	Test Conditions
G_{RR}	Gain Relative to Gain at 1kHz with Sinx/x Correction of 2910A or 2911A					0dBmO Input Signal
	Below 200Hz			0.125	dB	0dBmO Signal ≡ 1.6 V_{RMS} x $\text{Sin}\left(\frac{\pi f}{8000}\right)\left(\frac{\pi f}{8000}\right)$ Input at VF_RI
	200Hz	-0.5		0.125	dB	
	300Hz to 3000Hz	-0.125		0.125	dB	
	3300Hz	-.35		0.03	dB	
	3400Hz	-0.7		-0.1	dB	
	4000Hz			-14	dB	
	4600Hz and Above			-30	dB	
G_{AR}	Absolute Passband Gain at 1kHz, VF_RO	-0.1	0	+0.1	dB	R_L = ∞, Notes 3, 4
G_{ART}	Gain Variation with Temperature at 1kHz		.0002	.002	dB/°C	0dBmO Signal Level
G_{ARS}	Gain Variation with Supplies at 1kHz		.01	.07	dB/V	0dBmO Signal Level, Supplies ±5%
CT_{TR}	Cross Talk, Transmit to Receive, Measured at VF_RO; 20 log (VF_RO/VF_XO)		-70	-60	dB	VF_XI = 1.1 V_{RMS}, 1kHz Output VF_RI Connected to GRDA
N_{CR}	Total C Message Noise at Output, VF_RO		2	6	dBrnc0 [2]	VF_RO Output or PWRO+ and PWRO- Connected with Unity Gain
D_{DR}	Differential Envelope Delay, VF_RO, 1kHz to 2.6kHz			100	μs	
D_{AR}	Absolute Delay at 1kHz, VF_RO			110	μs	
DP_{R1}	Single Frequency Distortion Products			-48	dB	0dBm Input Signal at 1kHz
DP_{R2}	Single Frequency Distortion Products at Maximum Signal Level of +3dBm0 at VF_RO			-45	dB	+3dBmO Signal Level of 2.26 V_{RMS}, 1kHz Input at VF_RO

NOTES:
1. Typical values are for T_A = 25°C and nominal power supply values.
2. A noise measurement of 12dBrnc into a 600Ω load at the 2912A device is equivalent to 6dBrnc0.
3. For gain under load refer to output resistance specs and perform gain calculation.
4. Output is non-inverting.

TRANSFER CHARACTERISTICS

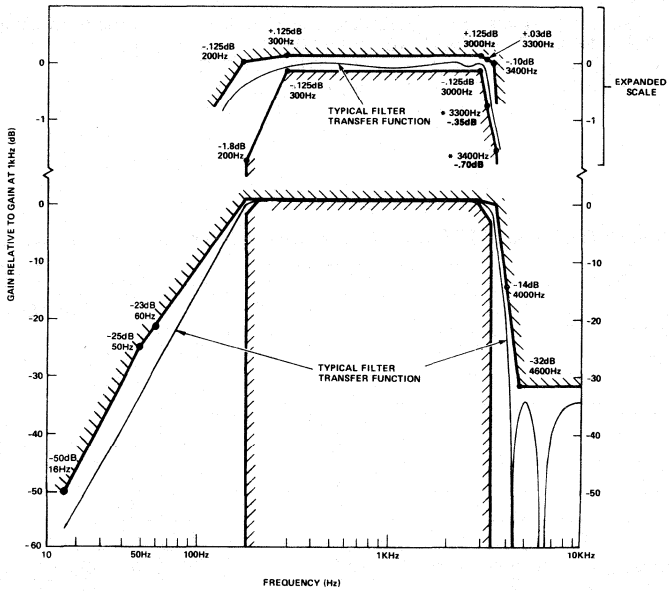

Figure 7. Transmit Filter

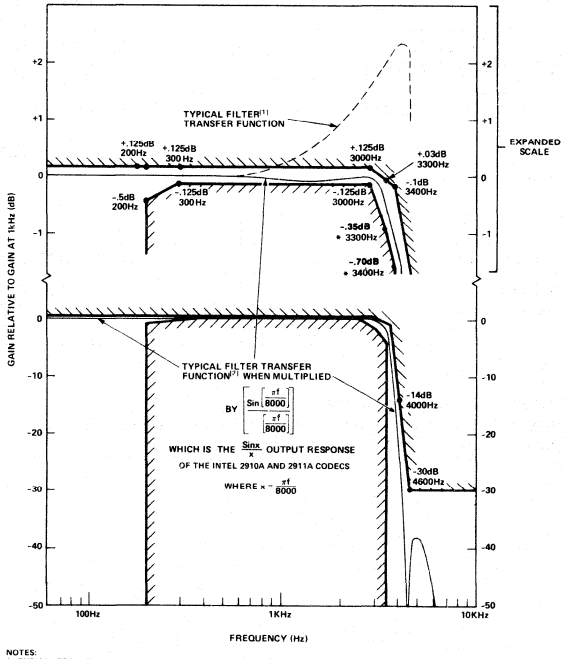

NOTES:
1. TYPICAL TRANSFER FUNCTION OF THE RECEIVE FILTER AS A SEPARATE COMPONENT.
2. TYPICAL TRANSFER FUNCTION OF THE RECEIVE FILTER DRIVEN BY THE SAMPLE AND HOLD OUTPUT OF THE INTEL 2910A AND 2911A CODECS. THE COMBINED FILTER/CODEC RESPONSE MEETS THE STATED SPECIFICATIONS.

Figure 8. Receive Filter

POWER SUPPLY REJECTION
TYPICAL VALUES OVER 3 RANGES

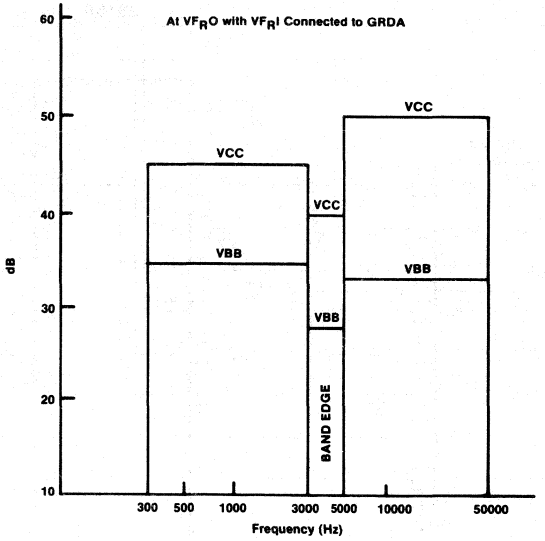

Figure 9. Receive Filter

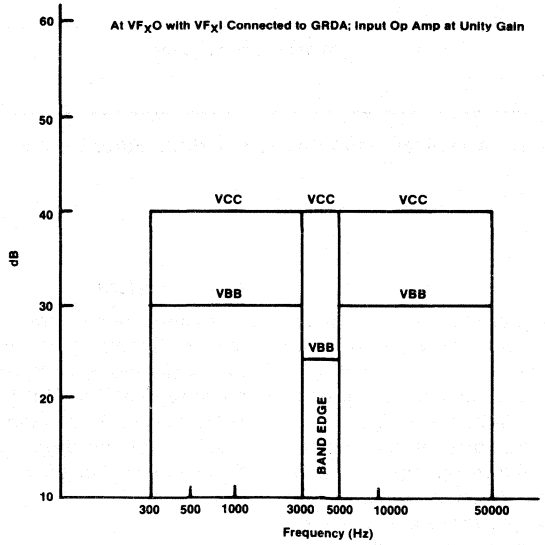

Figure 10. Transmit Filter

APPLICATIONS (Circuit Interface)

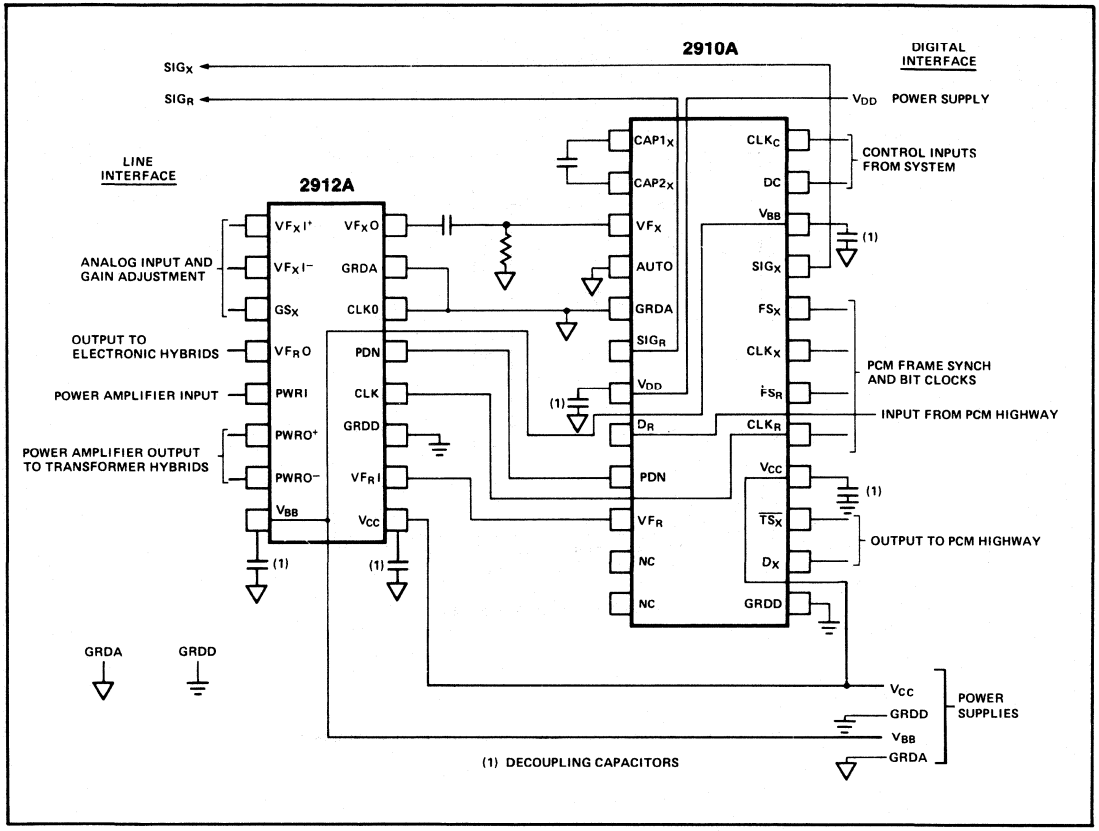

Figure 11. A Typical 2910A Codec and 2912A Filter Configuration

Codec Interface

The 2912A PCM Filter is designed to directly interface to the 2910A and 2911A Codecs as shown above. The transmit path is completed by connecting the VF_XO output of the 2912A to the coupling capacitor associated with the VF_X input of the 2910A and 2911A codecs. The receive path is completed by directly connecting the codec output VF_R to the receive input of the 2912A VF_RI. The PDN input of the 2912A should be connected to the PDN output of the codec to allow the filter to be put in the power-down standby mode under control of the codec.

Clock Interface

To assure proper operation, the CLK input of the 2912A should be connected to the same clock provided to the receive bit clock, CLK_R of 2910A or 2911A Codec as shown above. The CLK0 input of the 2912A should be set to the proper voltage depending on the standard clock frequency chosen for the codec and filter. See the clock selection table in the Pin Description section.

Layout Guidelines

The most important steps in designing a low noise line card are to insure that the layout of the circuit components and traces result in a minimum of cross coupling between analog and digital signals, and to provide well bypassed and clean power supplies, solid ground planes, and minimal lead lengths between components. Considering these items in more detail:

- All power source leads should be bypassed to ground on each printed circuit board (PCB), on which codecs are provided. At least one electrolytic bypass capacitor (approx. 50 microfarad) per board is recommended at the point where each power trace from the codec and filter joins prior to interfacing with the edge connector pins assigned to the power leads.
- Layout the traces on codec and filter equipped boards such that analog signal and capacitor leads are separated as widely as possible from the digital clock and data leads.
- Position the codec sample and hold capacitor as close to the codec as possible, and connect it with leads as short as possible.
- Do not layout any board traces (especially digital) that pass between or near the leads of the sample and hold capacitor(s) since they are in high impedance circuits which are sensitive to noise coupling.
- Keep analog traces situated in their layouts so that no intervening circuit leads are permitted to run parallel to or between them.
- The optimum grounding configuration is to maintain separate digital and analog grounds on the circuit boards, and to carry these grounds back to the power supply ground with a low impedance connection. This keeps the grounds separate over the entire system except at that one location.
- The voltage difference between ground leads GRDA and GRDD (analog and digital ground) should not exceed two volts. One method of preventing any substantial voltage difference between leads GRDA and GRDD is to connect two diodes back to back in opposite directions across these two ground leads on each codec.
- Codec-filter pairs should be aligned so that pins 9 through 16 of the filter face pins 1 through 12 of the codec. This minimizes the distance for analog connections between devices and prevents crossing analog lines.
- No digital lines or high level analog lines should run under or in parallel with analog interconnections from codec to filter. If the analog lines are on top (component side) of the PCB, then GRDD, GRDA, or power supply leads should be directly under them, on the bottom of the PCB (to prevent analog/digital coupling).
- Both the codec and filter devices should be shielded from traces on the bottom of the PCB by using ground or power supply leads on the top side directly under the device (like a ground plane).
- For each printed circuit board, two +5 volt power supply leads should be used, one for codecs and the other for filters, and separately decoupled where they join a single 5 volt supply at the PCB connector. Decoupling can be accomplished with a RC lowpass filter or a RF choke per power supply input. Both grounds and power leads must have low resistance and inductance which can be accomplished by using a ground plane whenever possible. If narrower traces must be used, maintain a minimum width of 4 millimeters and use multiple or extra large plated holes when passing ground connections through the PCB.
- The 2912A PCM filter should have all power supplies bypassed to analog ground (GRDA). The 2910A/11A codec +5V power supplies should be bypassed to the digital ground (GRDD) but the -5V and +12V supplies should be bypassed to analog ground (GRDA).

ADVANCE INFORMATION

2913 and 2914
Combined Single Chip PCM Codec and Filter

2914 Asynchronous clocks, 8th bit signaling, loop back test capability
2913 Synchronous clocks only

- **AT&T D3/D4 and CCITT Compatible**
- **Two Timing Modes:**
  - **— Fixed Data Rate Mode: Clock Options: 1.536 MHz, 1.544 MHz, 2.048 MHz**
  - **— Variable Data Mode: 64 kHz-4.096 MHz**
- **Pin Selectable μ-Law or A-Law Operation**
- **No External Components for Sample and Hold and Auto Zero Functions**
- **Precision On-Chip Voltage References**
- **Low Power Dissipation: 10 mW Typical Standby 175 mW Typical Operating**
- **Compatible with Intel Direct Mode 2910A, 2911A and 2912A**
- **Excellent Power Supply Rejection — Eliminates On-Board Regulator**

The Intel® 2913 and 2914 are fully integrated PCM (pulse code modulation) codecs (coder-decoder) and transmit/receive filters fabricated in a highly reliable and proven N-channel MOS silicon gate technology. These devices provide the functions that were formerly provided by two complex chips (2910A or 2911A and 2912A). Besides the higher level of integration the performance of the 2913 and 2914 is superior to that of the separate devices.

The primary applications for the 2913 and 2914 are in telephone systems:

- Switching—2913-Digital PBX's and Central Office Switching Systems
- Transmission—2914-D3/D4 Channel Banks
- Concentration—2913 or 2914-Subscriber Carrier and Concentrators

The wide dynamic range of the 2913 and 2914 (78 dB) and the minimal conversion time make them ideal products for other applications such as:

- Data Acquisition
- Telemetry
- Secure Communications Systems
- Signal Processing Systems

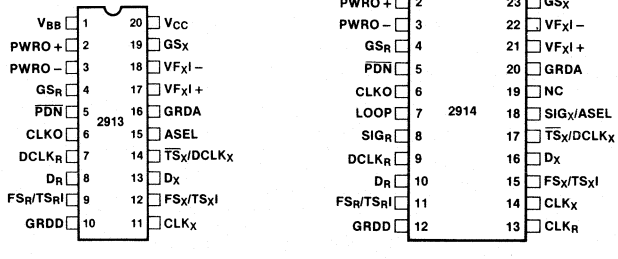

Figure 1. Pin Configuration

Intel Corporation Assumes No Responsibilty for the Use of Any Circuitry Other Than Circuitry Embodied in an Intel Product. No Other Circuit Patent Licenses are Implied.
© INTEL CORPORATION, 1981

AFN-01901A
3465

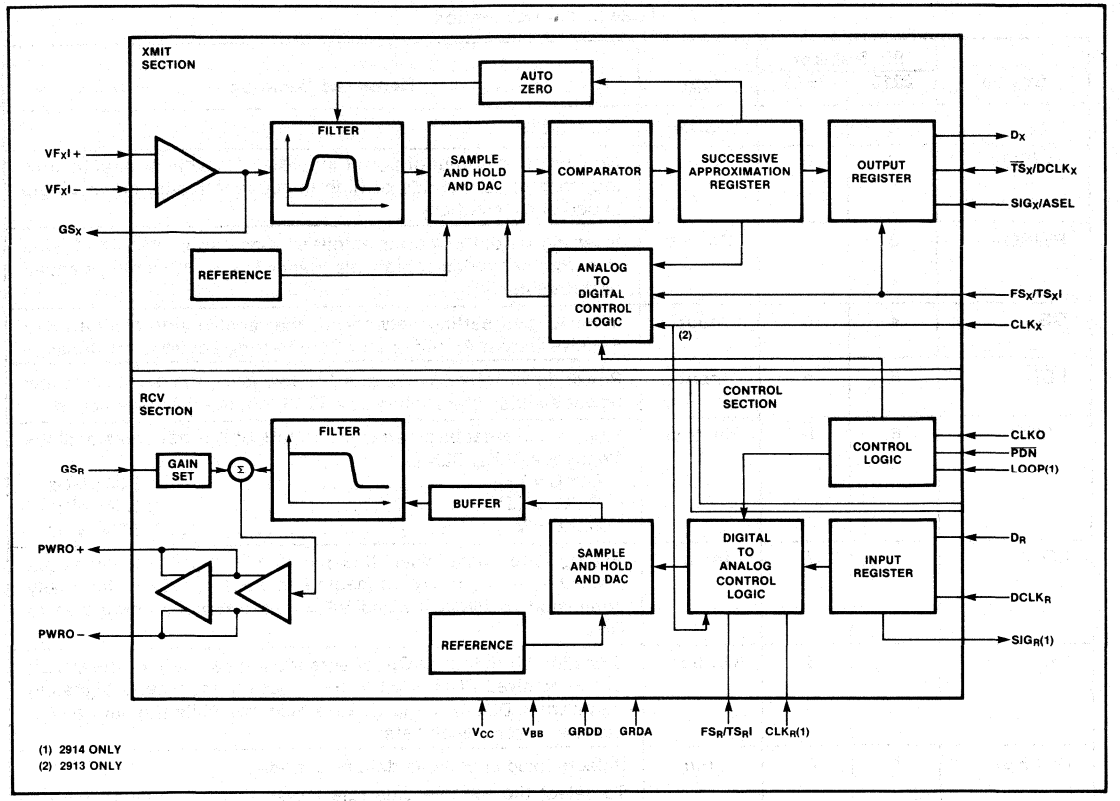

Figure 2. Block Diagram

Table 1. Pin Names

V_{BB}	Power (−5V)
PWRO+, PWRO−	Power Amplifier Outputs
GS_R	Gain Setting Input for Receive Channel
$\overline{PDN}$	Power Down Select
CLKO	Master Clock Select
LOOP	Analog Loop Back
SIG_R	Signaling Bit Output
$DCLK_R$	Receive Data Rate Clock
D_R	Receive Channel Input
FS_R	Receive Frame Synchronization Clock
TS_RI	Receive Frame Synchronization and Timeslot
GRDD	Digital Ground
V_{CC}	Power (+5V)
GS_X	Gain Control
VF_XI-, VF_XI+	Analog Inputs
GRDA	Analog Ground
NC	No Connect
SIG_X	Transmit Digital Signaling Input
ASEL	μ- or A-law Select
$\overline{TS_X}$	Digital Output — Timeslot Strobe
$DCLK_X$	Transmit Data Rate Clock
D_X	Transmit (Digital) Output
FS_X	Transmit Frame Synchronization Clock
TS_XI	Transmit Frame Synchronization and Timeslot Strobe
CLK_X	Transmit Master Clock
CLK_R	Receive Master Clock

Table 2. Pin Description

Symbol	Pin Number 2913	Pin Number 2914	Type	Name and Function
V_{BB}	1	1	Power	−5V, ±5%
PWRO+	2	2	Output	Non-inverting output of power amplifier. Capable of directly driving transformer hybrids or high impedance loads, either single ended or differentially.
PWRO−	3	3	Output	Inverting output of power amplifier. Capable of directly driving transformer hybrids or high impedance loads, either single ended or differentially.
GS_R	4	4	Input	Input to gain setting network on the receive side of filter. See Receive Output Amplifier and Gain Setting sections for details.
$\overline{PDN}$	5	5	Input	Power down select. When at a TTL low level, the device is in low power standby state; when at a TTL high, the device is active.
CLKO	6	6	Pinstrap	Input which must be pinstrapped to reflect the input master clock frequency CLK_X, CLK_R. CLKO = V_{BB} . . . . . 2.048 MHz CLKO = GRDD . . . . . 1.544 MHz CLKO = V_{CC} . . . . . 1.536 MHz
LOOP		7	Input	Analog loop back. When this pin is TTL high, receive output (PWRO+) is internally connected to VF_XI+, GS_R is internally connected to PWRO+, and VF_XI- is internally connected to GS_X.
SIG_R		8	Output	Signaling bit output. SIG_R reflects the logical state of the 8th bit of the received PCM word in the most recent receive signaling frame when $DCLK_R = V_{BB}$. SIG_R is held low while the device is in the low power standby state.
$DCLK_R$	7	9	Input	Selects fixed or variable data rate mode. To select the variable data rate mode, this pin must be the bit clock for the receive PCM highway. Also TS_RI, TS_XI and $DCLK_X$ must have the appropriate inputs. Data is received on eight consecutive negative transitions occurring while TS_RI is high. Data can be clocked at any frequency from 64 kHz to 4.096 MHz. To select the fixed rate mode $DCLK_R$ must be connected to V_{BB}. Then 2910A or 2911A type timing is used and FS_R, FS_X, and $\overline{TS_X}$ must have the appropriate inputs.
D_R	8	10	Input	Receive channel input from the PCM highway data bus. PCM data is clocked in on this lead. In the fixed data rate mode, CLK_R acts as the bit clock; in the variable data rate mode, $DCLK_R$ becomes the bit clock.
FS_R/TS_RI	9	11	Input	In the fixed data rate mode, this pin is the receive synchronization clock. It defines the beginning of the receive timeslot on the receive PCM highway; the width of FS_R is used to distinguish between signaling and non-signaling frames for the receive channel. In variable data rate mode, this pin (TS_RI) defines the duration of the receive timeslot. The device enters the standby state whenever FS_X and FS_R are removed for several milliseconds.
GRDD	10	12	Ground	Digital ground return for all internal logic circuits. Not internally tied to GRDA.

Table 2. Pin Description (Continued)

Symbol	Pin Number 2913	Pin Number 2914	Type	Name and Function
CLK_R	—	13	Input	Master and bit (data) clock for the fixed data rate mode and receive master clock only for the variable data rate mode. As a bit clock, PCM data is clocked in on 8 successive negative transitions of the bit clock beginning with the first negative transition following FS_R.
CLK_X	11	14	Input	Master and bit (data) clock for the fixed data rate mode and transmit master clock only for the variable data rate mode. As a bit clock PCM data is clocked out on 8 successive positive transitions of the bit clock, beginning with the first transition following FS_X.
FS_X/TS_XI	12	15	Input	In fixed data rate mode, this pin is the transmit frame synchronization clock. It defines the beginning of the transmit timeslot on the transmit PCM highway; the width of FS_X is used to distinguish between signaling and non-signaling frames for the transmit channel. In the variable data rate mode, this pin (TS_XI) defines the duration of the transmit timeslot. The device enters low power standby whenever FS_X and FS_R are removed (held low).
D_X	13	16	Output	Transmit channel PCM data output. In fixed data rate mode, D_X is active only while $\overline{TS}_X$ is low. In variable data rate mode, D_X is active only while TS_XI is active and is clocked out at by $DCLK_X$.
$\overline{TS}_X/DCLK_X$	14	17	Output/ Input	Transmit channel timeslot strobe or data rate clock for the transmit PCM highway. When $DCLK_R = V_{BB}$, this pin is an open drain output designed to be used as an enable signal for an off-chip three-state buffer if buffering between D_X and the transmit bus is desired. When $DCLK_R \neq V_{BB}$, this pin defines the data rate to the tansmit PCM highway, and data is transmitted on eight consecutive negative transitions occurring while TS_XI is high. Data can be clocked at any frequency from 64 kHz to 4.096 MHz.
$SIG_X/ASEL$	15	18	Input/ Pinstrap	A dual purpose pin. When externally pinstrapped to V_{BB}, A-law operation is selected. For μ-law operation this is a TTL level input, the logical state of which replaces the 8th bit (least significant bit, LSB) of the transmit PCM word in transmit signaling frames.
NC		19		No Connect
GRDA	16	20	Ground	Analog ground return for all internal voice circuits. Not internally connected to GRDD.
VF_XI+	17	21	Input	Non-inverting analog input of uncommitted op amp.
VF_XI-	18	22	Input	Inverting analog input of uncommitted op amp.
GS_X	19	23	Input/ Output	Output terminal of on-chip uncommitted op amp. Internally, this pin is the voice signal input to the transmit filter.
V_{CC}	20	24	Power	+5V, ±5%

FUNCTIONAL DESCRIPTION

The 2913 and 2914 provide the analog-to-digital and the digital-to-analog conversions and the transmit and receive filtering necessary to interface a full duplex (4 wires) voice telephone circuit with the PCM highways of a time division multiplexed (TDM) system. They are intended to be used at the analog termination of a PCM line or trunk.

The following major functions are provided:

- Bandpass filtering of the analog signals prior to encoding and after decoding
- Encoding and decoding of voice and call progress information
- Encoding and decoding of the signaling and supervision information

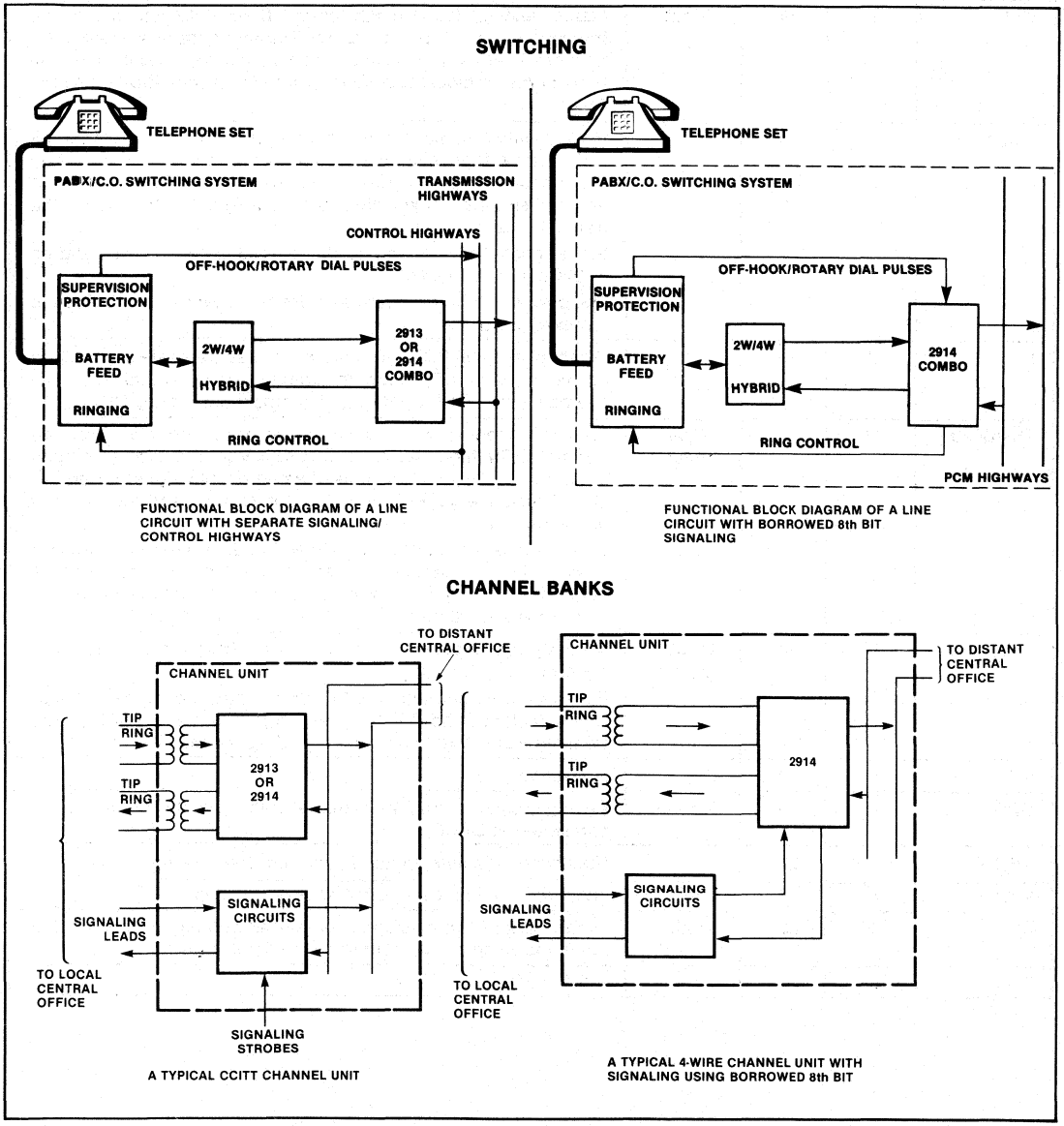

Figure 3. Typical Line Terminations

TRANSMIT OPERATION

Transmit Filter

The input section provides gain adjustment in the passband which is provided by an input operational amplifier. This operational amplifier has a common mode range of +2.2 volts, a DC offset of typically 25 mV, a voltage gain of typically 5000, and a unity gain bandwidth of typically 1 MHz. Gain of up to 20 dB can be set without degrading the noise performance of the filter. The load impedance connected to the amplifier output must be greater than 10K ohms in parallel with less than 50 pF. The input signal on lead VF_XI+ can be either AC or DC coupled. The input op amp can also be used in the inverting mode or differential amplifier mode. (See Figure 4.)

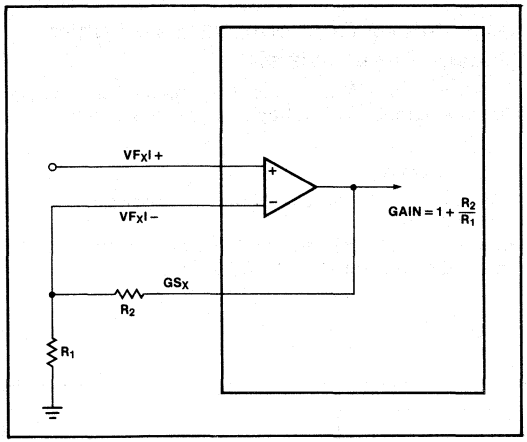

Figure 4. Transmit Filter Gain Adjustment

A low pass anti-aliasing section is included on chip. This section typically provides 35 dB attenuation at the sampling frequency. No external components are required to provide the necessary anti-aliasing function for the switched capacitor section of the transmit filter.

The passband section provides flatness and stopband attenuation which fulfills the AT&T® D3/D4 specification and the CCITT G.712 recommendation. The 2913 and 2914 specifications meet the digital class 5 central office switching systems requirements. The transmit filter transfer characteristics and specifications will be within the limits shown in Figure 5.

A high pass section configuration was chosen to reject low frequency noise from 50 and 60 Hz power lines, 17 Hz European electric railroads, ringing frequencies and their harmonics, and other low frequency noise. Even though there is high rejection at these frequencies, the sharpness of the band edge gives low attenuation at 200 Hz. This feature allows the use of low cost transformer hybrids without external components. Transformer hybrids have difficulty in obtaining good coupling at low frequencies.

Encoding

The encoder internally samples the output of the transmit filter and holds the sample on an internal sample and hold capacitor. An on-chip auto zero circuit corrects for DC offset. Thus, no external components are required to perform sample and hold and auto zero functions. In addition, a special circuit in the encoder will prevent the sign-bit from toggling under idle channel conditions, even though the auto zero function is still being performed.

After the encoding the PCM data are presented at the D_X pin on the first 8 bits of the frame.

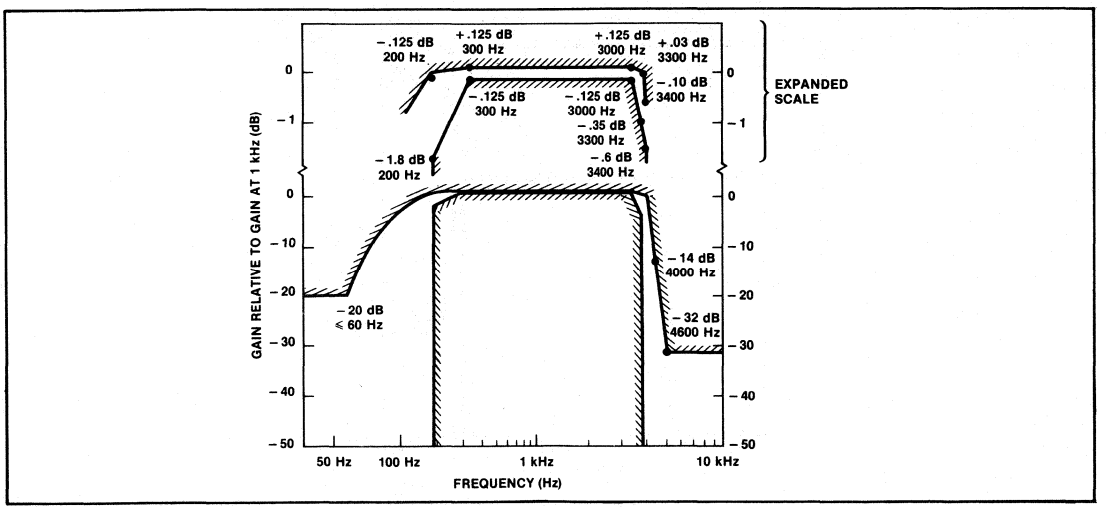

Figure 5. Transmit Filter Transfer Characteristics

RECEIVE OPERATION

Decoding

The PCM word is serially fetched by the D_R lead from the PCM highway at the proper timeslot occurrence. The decoded value is held on an internal sample and hold capacitor; no external receive sample and hold capacitor is needed.

Receive Filter

The receive section of the filter provides a passband flatness and stopband rejection which fulfills the AT&T® D3/D4 specification and the CCITT G.712 recommendation when used with a decoder which contains a sample and hold amplifier at its output. The filter contains the required compensation for the sin x/x response of such decoders. The receive filter transfer characteristics and specifications will be within the limits shown in Figure 6.

Receive Output Power Amplifiers

A balanced output amplifier is provided in order to allow maximum flexibility in output configuration. Either of the two outputs PWRO+ and PWRO− can be used single ended (referenced to GRDA) to drive single ended loads. Alternatively, the differential output will drive a bridged load directly. The output current drive capability is capable of driving loads as low as 300 ohms single ended or 600 ohms differentially.

The receive channel transmission level may be adjusted between specified limits by manipulation of the GS_R input. GS_R is internally connected to an analog gain setting network. When GS_R is externally strapped to PWRO−, the receive transmission level is maximized; when tied to PWRO+, the transmission level is minimized. These transmission levels are specified in terms of the receive channel output under digital milliwatt conditions; that is, the rms 1 kHz output when the receive digital channel is receiving the 8-bit code sequence specified in CCITT recommendation G.711. The output transmission level interpolates between these limits as GS_R is interpolated (with a potentiometer) between PWRO+ and PWRO−. The use of the output gain set is illustrated in Figure 7.

Gain Setting Configurations To Adjust Receive Output Levels

PWRO+ and PWRO− are low impedance complementary outputs. The voltages at the nodes are:

Vo^+ at PWRO+

Vo^- at PWRO−

$Vo = Vo^+ - Vo^-$ (total differential response)

R_1 and R_2 are a gain setting resistor network with the center tap connected to the GS_R input.

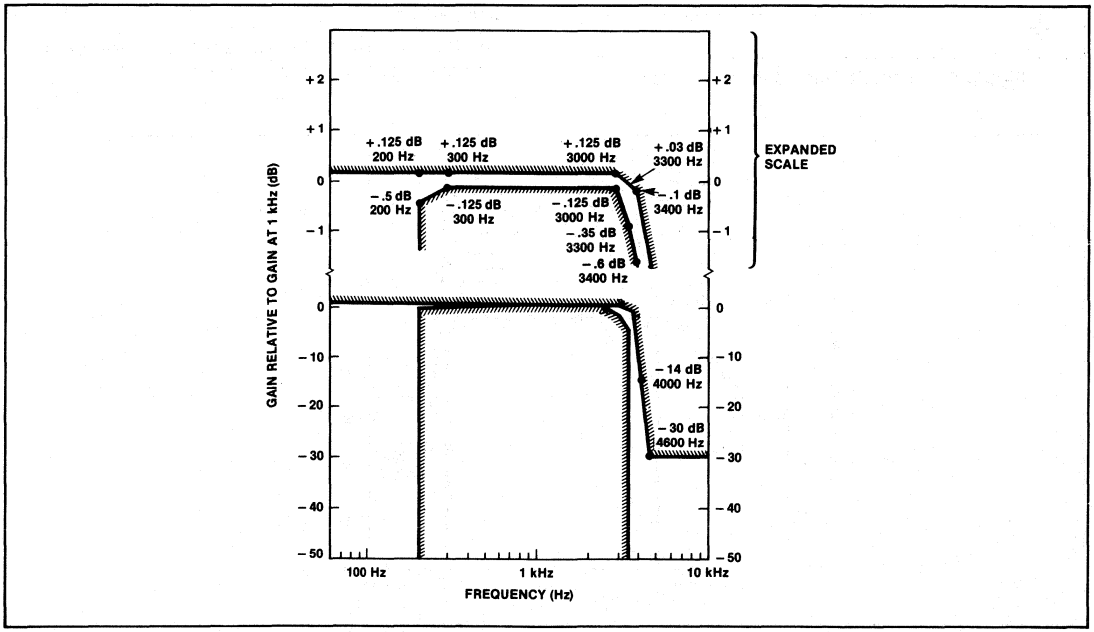

Figure 6. Receive Filter Transfer Characteristics

A value greater than 10K ohms and less than 100K for $R_1 + R_2$ is recommended because:

(a) The parallel combination of $R_1 + R_2$ and R_L sets the total loading

(b) The total capacitance at the GS_R input and the parallel combination of R_1 and R_2 define a time constant which has to be minimized to avoid inaccuracies

V_A represents the maximum available digital milliwatt output response. ($V_A = 1.50\ V_{RMS}$).

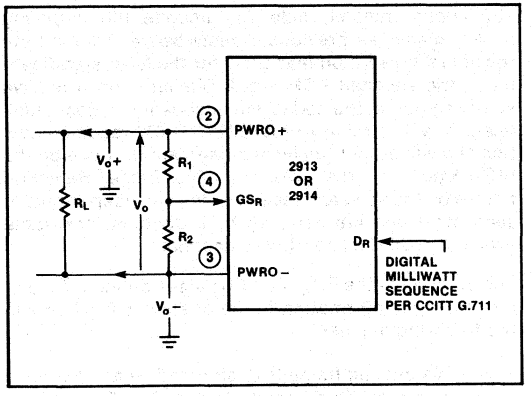

Figure 7. Gain Setting Configuration

$$Vo = -A\,V_A$$

$$\text{where } A = \frac{1/4}{1 - 3/4\ \dfrac{R_1/R_2}{1 + R_1/R_2}}$$

For design purposes, a useful form is R_1/R_2 as a function of A.

$$R_1/R_2 = \frac{8A - 2}{-2A + 2}$$

(Allowable values for A are those which make R_1/R_2 positive.)

Examples are:

If A = 1, (maximum output) then

$R_1/R_2 = \infty$ or $V(GS_R) = Vo^-$; i.e., GS_R is tied to PWRO−

If A = 1/2, then

$R_1/R_2 = 2$

If A = 1/4, (minimum output) then

$R_1/R_2 = 0$ or $V(GS_R) = Vo^+$; i.e., GS_R is tied to PWRO+

GENERAL OPERATION

Fixed Timing Mode

Fixed data rate timing, which is 2910A and 2911A compatible, is selected by connecting $DCLK_R$ to V_{BB}. It employs the frame synchronization clocks FS_X and FS_R, master clocks CLK_R and CLK_X, and output $\overline{TS}_X$. On a non-signaling frame on the transmit side, the codec section encodes the analog signal into an 8-bit PCM word at the frame rate FS_X. This word is then gated by $\overline{TS}_X$ onto the PCM highway (D_X lead). This encoding follows either the μ-law or A-law conversion algorithms.

On the receive side in a non-signaling frame, the codec section decodes the incoming PCM data word into an analog voltage at the frame rate FS_X. It is then held on an internal sample and hold capacitor.

The frequency of CLK_X and CLK_R, which serve both as master clocks to operate the codec and filter and bit clocks to clock-in the data, is selected by the CLKO pin to be either 1.544 MHz, 2.048 MHz, or 1.536 MHz. No other frequency of operation is allowed in the fixed data rate mode.

Variable Timing Mode

Variable data rate timing is selected by connecting $DCLK_R$ to the bit clock for the receive PCM highway rather than to V_{BB}. It employs frame synchronization clocks TS_RI and TS_XI, bit clocks $DCLK_R$ and $DCLK_X$, and master clocks CLK_X and CLK_R. Variable data rate timing allows for a flexible data frequency. It provides the ability to vary the frequency of the bit clocks, which can be asynchronous as in the case of the 2914 or synchronous as in the case of the 2913. TS_XI and TS_RI become the frame synchronization clocks (replacing FS_X and FS_R). $DCLK_R$ and $DCLK_X$ become the data rate clocks for the receive and transmit PCM highway. While TS_XI is high, PCM data from D_X is transmitted onto the highway upon the next eight consecutive positive transitions of $DCLK_X$. Similarly, while TS_RI is high, each PCM bit from the highway is received by D_R on the next eight consecutive negative transitions of $DCLK_R$. In this way, the PCM data rates for both transmit and receive are variable; hence, it is called variable data rate timing. The PCM data rate can be varied from 64 kHz to 4.096 MHz.

The fixed data rate mode accommodates signaling. Variable data rate timing does not allow signaling, since there is no means to specify which frames are to be signaling frames.

Transmit Only Operation

If transmit only operation is desired, FS_X/TS_XI and CLK_X should be applied to the device while CLK_R and FS_R/TS_RI can be removed. If FS_R/TS_RI is removed, the receive section of device will enter the power-down state resulting in much lower power dissipation.

The digital PCM data (D_X) on the transmit side will continue to be serially outputted during the frame as long as $DCLK_X$ is pulsed and TS_XI is high. This function

allows the PCM word to be transmitted to the transmit PCM highway more than once per frame, if desired. (See Table 3.)

Receive Only Operation

If receive only operation is desired, FS_R/TS_RI and CLK_R should be applied to the device while CLK_X and FS_X/TS_XI can be removed. If FS_X/TS_XI is grounded, transmit section of device will enter power down-state resulting in much lower power dissipation. In addition, $\overline{TS}_X$ will be forced internally to a TTL high and D_X will be held in the high impedance state. (See Table 3.)

Standby Mode — Power-Down

To minimize power consumption and heat dissipation a standby mode is provided where most 2913/2914 functions are disabled. Only the power-down, clock, and frame sync buffers, which are required to power-up the device, are enabled in this mode.

To provide flexibility there are 4 power-down methods. These methods are presented in Table 3 along with digital output conditions which safeguard the PCM highway.

Placing and holding $\overline{TS}_X$ and D_X in a high impedance state enhances system reliability by guaranteeing that the PCM highway will not be driven while entering and remaining in the standby mode. The SIG_R output is held at a TTL low to provide a known condition; it remains low upon power-up until it is changed by signaling.

To further enhance system reliability, $\overline{TS}_X$ and D_X will be placed and held in a high impedance state several milliseconds after an interruption of CLK_X. This interruption could possibly occur with some kind of fault condition.

Power-On

Methods for powering-up the 2913 or 2914 maintain PCM highway integrity because they eliminate chances of jamming or putting noise on the highway.

The device can be powered up by pulsing either FS_R or FS_X or both and by applying a TTL high voltage to $\overline{PDN}$. If only FS_R and $\overline{PDN}$ are applied, only the receive side will power up. If only FS_X and $\overline{PDN}$ are applied, only the transmit side will power up. If all three are applied then both sides will power up. This assumes V_{CC} and V_{BB} have been previously applied.

Signaling

Signaling can only be performed with the 2914 and in the fixed data rate timing mode ($DCLK_R = V_{BB}$). In this mode, the timing is similar to the 2910A utilizing FS_X and $\overline{TS}_X$.

The codec transmit side will encode the incoming analog signal as previously described and substitute the signal present on lead SIG_X for the least significant bit of the encoded PCM word. Similarly, on a receive signaling frame, the codec will decode the 7 most significant bits according to the CCITT G.733 recommendation and will output the least significant bit value on the SIG_R lead until the next signaling frame. Signaling frames on the send and receive sides are independent of each other and are selected by a double-width frame sync pulse on the appropriate channel.

The duration of the FS_X and FS_R pulses defines whether a frame is an information frame or a signaling frame in the following manner:

- A non-signaling frame is designated by an FS_X pulse which is a full CLK_X period in duration (CLK_X period for FS_X, CLK_R period for FS_R)
- A signaling frame is designated by an FS_X pulse which is two full CLK_X periods in duration (two CLK_X periods for FS_X, two CLK_R periods for FS_R)

On the encoding side, when the FS_X pulse is widened, the 8th bit of the PCM word will be replaced by the value on the SIG_X input at the time the 8th bit is output on the D_X lead. (See Figure 8.)

Table 3. Power-Down Methods

Device Status	Power-Down Method	Digital Output Status
(1) Both Transmit and receive side on standby	$\overline{PDN} = 0$	$\overline{TS}_X$ and D_X are placed in a high impedance state and SIG_R is placed in a TTL low state in the frame immediately following onset of $\overline{PDN} = 0$.
(2) Same as (1)	FS_X/TS_XI and FS_R/TS_RI are removed	$\overline{TS}_X$ and D_X are placed in a high impedance state and SIG_R is placed in a TTL low state several milliseconds after FS_X/TS_XI and FS_R/TS_RI are removed.
(3) Only transmit is on standby	FS_X/TS_XI is removed	Same as (2) except SIG_R is still operational.
(4) Only receive is on standby	FS_R/TS_RI is removed	SIG_R is placed in a TTL low state several milliseconds after removal of FS_R/TS_RI.

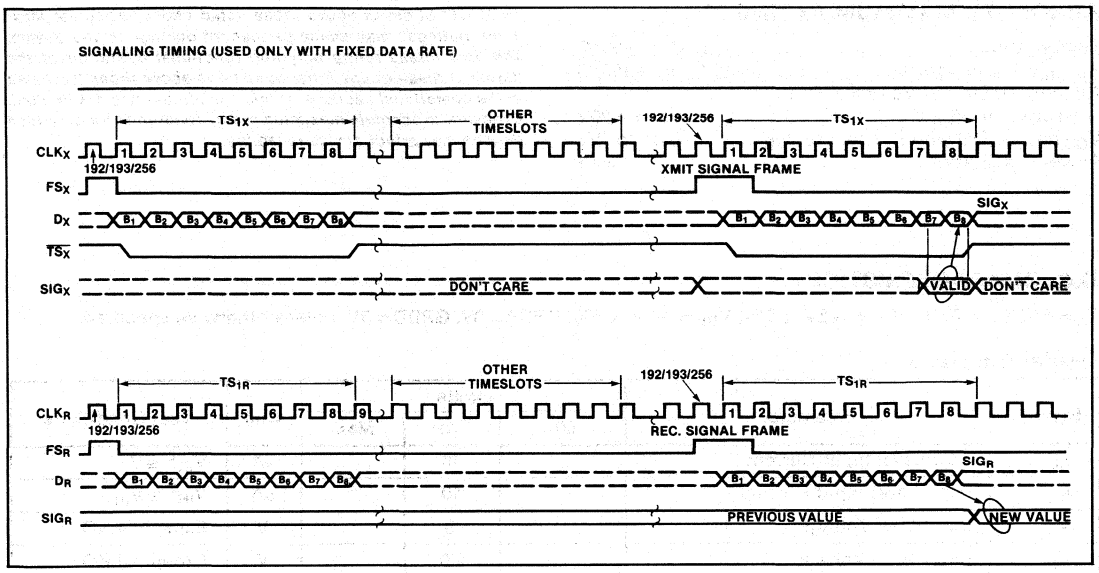

Figure 8. Signaling Timing (Used Only with Fixed Data Rate Mode)

Call progress tones (dial tone, busy tone, ring-back tone, re-order tone) and pre-recorded announcements, can be sent through the voice-path; digital signaling (off hook and disconnect supervision, rotary dial pulses, ring control) is sent through the signaling path.

Precision Voltage Reference

The voltage reference is generated on the chip and is calibrated during the manufacturing process. The technique uses the difference in sub-surface charge density between two suitably implanted MOS devices to derive a temperature stable and bias stable reference voltage.

A gain setting op amp, programmed during manufacturing, trims the reference voltage source to the final precision voltage reference value provided to the D/A converter. The precision voltage reference determines the initial gain and dynamic range characteristics.

Separate references are supplied to both transmit and receive sections. Each reference is trimmed independently during manufacturing.

Conversion Laws

The 2913 or 2914 can be selected for either A-law or μ 255-law operation (as specified by CCITT G.711). If A-law operation is desired, SIG_X should be tied to V_{BB}. Signaling will not be allowed during A-law operation. Signaling is allowed when μ 255-law is selected and in fixed data rate mode. If μ 255-law operation is selected, SIG_X should be operated between GRDD and V_{CC}.

ABSOLUTE MAXIMUM RATINGS*

Temperature ..... −10°C to +80°C
Storage Temperature ..... −65°C to +150°C
All Input or Output Voltages with
Respect to V_{BB} ..... −0.3V to +20V
V_{CC} and GRDD with Respect to V_{BB} ..... −0.3V to 15V
Power Dissipation 1.35W

**NOTICE: Stresses above those listed under "Absolute Maximum Ratings" may cause permanent damage to the device. This is a stress rating only and functional operation of the device at these or any other conditions above those indicated in the operational sections of this specification is not implied. Exposure to absolute maximum rating conditions for extended periods may affect device reliability.*

D.C. CHARACTERISTICS

$T_A = 0°C$ to $+70°C$, $V_{CC} = +5V \pm 5\%$, $V_{BB} = -5V \pm 5\%$, GRDA = 0V, GRDD = 0V, unless otherwise specified.

Digital Interface

Symbol	Parameter	Limits			Unit	Test Conditions
		Min	Typ[1]	Max		
I_{IL}	Low Level Input Current		10		μA	V_{IN}[2] ≤ V_{IL}
I_{IH}	High Level Input Current		10		μA	V_{IN}[2] ≥ V_{IH}
V_{IL}	Input Low Voltage		.8		V	Except CLKO
V_{IH}	Input High Voltage		2.0		V	Except CLKO
V_{OL}	Output Low Voltage		.4		V	I_{OL} = 3.2 mA at pins D_X and $\overline{TS}_X$ $SIG_R = I_{OL}$ = 1.6 mA
V_{OH}	Output High Voltage		2.4		V	$D_X = I_{OH}$ = 10 mA $SIG_R = I_{OH}$ = .6 mA
V_{ILO}	Input Low Voltage, CLKO	V_{BB}		V_{BB} + .5	V	
V_{IIO}	Input Intermediate Voltage, CLKO	GRDD − 0.5		0.8	V	
V_{IHO}	Input High Voltage, CLKO	V_{CC} − .5		V_{CC}	V	

Power Dissipation

Symbol	Parmeter	Limits			Unit	Test Conditions
		Min	Typ[1]	Max		
I_{CCO}	V_{CC} Standby Current		.9		mA	
I_{BBO}	V_{BB} Standby Current		.9		mA	
I_{CCI}	V_{CC} Operating Current		16		mA	
I_{BBI}	V_{BB} Operating Current		16		mA	
P_{D1}	Operating Power Dissipation		175		mW	
P_{D0}	Standby Power Dissipation		10		mW	

Note 1: Typical values are for $T_A = 25°C$ and nominal power supply values.
2: V_{IN} is voltage on any digital input pin.

D.C. CHARACTERISTICS (Continued)

$T_A = 0°C$ to $+70°C$, $V_{CC} = +5V \pm 5\%$, $V_{BB} = -5V \pm 5\%$, GRDA = 0V, GRDD = 0V, unless otherwise specified.

Power Supply Rejection (Transmit = Receive)

Symbol	Parameter	Limits			Unit	Test Conditions
		Min	Typ[1]	Max		
$PSRR_1$	V_{CC} Power Supply Rejection		−40		dB	Idle Channel; 200 mV P-P signal of f_o on supply; $0 \leq f_o \leq 50$ kHz Measure at both D_X and PWRO+ or PWRO−
$PSRR_2$	V_{BB} Power Supply Rejection		−35		dB	Idle Channel; 200 mV P-P signal of f_o on supply; $0 \leq f_o \leq 50$ kHz Measure at both D_X and PWRO+ or PWRO−

Note 1: Typical values are for $T_A = 25°C$ and nominal power supply values.

A.C. CHARACTERISTICS

$T_A = 0°C$ to $+70°C$, $V_{CC} = +5V \pm 5\%$, $V_{BB} = -5V \pm 5\%$, GRDA = 0V, GRDD = 0V, unless otherwise specified.

Clock Input Frequency: CLK = 1.536 MHz ± 0.1%, CLKO = V_{CC}
CLK = 1.544 MHz ± 0.1%, CLKO = GRDD
CLK = 2.048 MHz ± 0.1%, CLKO = V_{BB}

Half Channel Transmission Characteristics (Transmit = Receive)

Symbol	Parameter	Limits			Unit	Test Conditions
		Min	Typ[1]	Max		
S/D	Signal/Total Distortion Ratio; AT&T PUB43801 and CCITT G.712, Method 2 (weighted sinusoid) testing) (Figure 9)		37 31 26		dB dB dB	$0 \leq VF_XI < -30$ dBmO $-30 \leq VF_XI < -40$ dBmO $-40 \leq VF_XI < -45$ dBmO VF_XI = 1.02 kHz sinusoid, either μ-law or A-law
S/D	Signal/Total Distortion Ratio; CCITT G.712, Method 1 (white noise testing)		TBD TBD TBD TBD TBD TBD		dB dB dB dB dB dB	$0 \leq VF_XI < -3$ dBmO $-3 \leq VF_XI < -6$ dBmO $-6 \leq VF_XI < -27$ dBmO $-27 \leq VF_XI < -34$ dBmO $-34 \leq VF_XI < -40$ dBmO $-40 \leq VF_XI < -55$ dBmO
ΔG	Gain Tracking Error; AT&T PUB43801 and CCITT G.712, Method 2 (weighted sinusoid testing) (Figure 10)		±.20 ±.30 ±1.0		dB dB dB	$+3 \leq VF_XI < -37$ dBmO $-37 \leq VF_XI < 50$ dBmO $-50 \leq VF_XI < 55$ dBmO Relative input of 0 dBmO at 1004 Hz

Note 1: Typical values are for $T_A = 25°C$ and nominal power supply values.

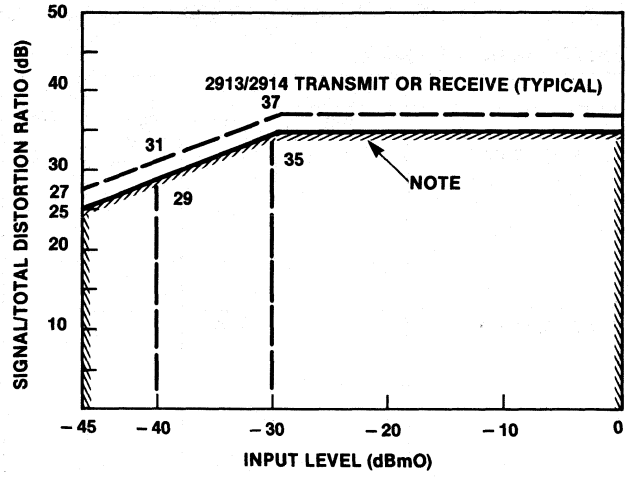

NOTE: THE SHADED TEMPLATE REFLECTS HALF-CHANNEL TRANSMISSION STANDARD CONSISTENT WITH AT&T TECHNICAL ADVISARY NO. 64, AT&T PRELIMINARY DIGITAL CHANNEL BANK REQUIREMENTS (PUB 43801), AND CCITT STUDY GROUP XVIII.

Figure 9. S/D Half-Channel Signal/Total Distortion Ratio; Transmit or Receive

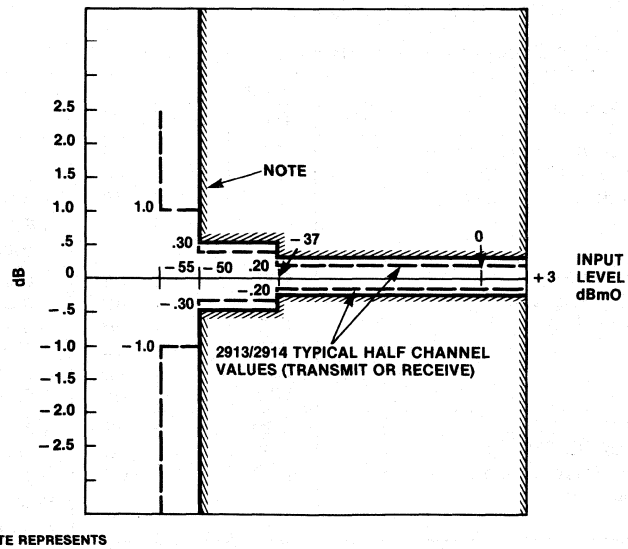

NOTE: THE SHADED TEMPLATE REPRESENTS TRANSMISSION STANDARDS CONSISTENT WITH AT&T TECHNICAL ADVISORY NO. 64, AT&T PRELIMINARY DIGITAL CHANNEL BANK REQUIREMENTS (PUB 43801), AND CCITT STUDY GROUP XVIII.

Figure 10. ΔG, Half-Channel Gain Tracking; Transmit or Receive

A.C. CHARACTERISTICS (Continued)

$T_A = 0°C$ to $+70°C$, $V_{CC} = +5V \pm 5\%$, $V_{BB} = -5V \pm 5\%$, GRDA = 0V, GRDD = 0V, unless otherwise specified.

Clock Input Frequency: CLK = 1.536 MHz ± 0.1%, CLKO = V_{CC}
CLK = 1.544 MHz ± 0.1%, CLKO = GRDD
CLK = 2.048 MHz ± 0.1%, CLKO = V_{CC}

Half Channel Transmission Characteristics (Transmit = Receive)

Symbol	Parameter	Limits			Unit	Test Conditions
		Min	Typ[1]	Max		
N_{IC1}	Idle Channel Noise C-Message Weighted Psophometric Weighted		 9 −81		 dBrncO dBmOp	Input grounded; no signaling
N_{IC1}	Idle Channel Noise C-Message Weighted (2914 only)		12		dBrncO	With 6th and 12th Frame signaling
DP_{XI}	Single Frequency Distortion Products (In-band distortion)		−47		dB	VF_{XI} = 1.02 kHz 0 dBmO
IMD_2 IMD_3	Intermodulation Distortion 2nd order 3rd order		 TBD TBD		 dB dB	

Transmit Transmission Characteristics

Symbol	Parameter	Limits			Unit	Test Conditions
		Min	Typ[1]	Max		
A_{IR}	Transmit Input Dynamic Range (Called T_{MAX} in CCITT Rec. G.711)		1.533 ± .008		V_{RMS}	1 kHz, Input Op-amp with gain
CT_{TR}	Crosstalk, XMIT to RCV		−80		dB	VF_X = 0 dBmO 1.02 kHz; D_R = all one's, measure at PWRO+ or PWRO−

Receive Transmission Characteristics

Symbol	Parameter	Limits			Unit	Test Conditions
		Min	Typ[1]	Max		
DmW	Digital Milliwatt Response single ended outputs		4.00 ± .04		dBm into load (R_L) of 900Ω	D_R = DmW Sequence per CCITT G.711
CT_{RT}	Crosstalk, RCV to XMIT		−80		dB	D_R = 0 dBmO 1.02 kHz, VF_X = GRDA, measure at D_X

Note 1: Typical values are for $T_A = 25°C$ and nominal power supply values.

A.C. CHARACTERISTICS (Continued)

Clock Section

Symbol	Parameter	Limits			Unit	Test Conditions
		Min	Typ[1]	Max		
t_{CY}	Clock Period	485			ns	CLK_X, CLK_R 2.048 MHz systems
t_{CLK}	Clock Pulse Width	215			ns	CLK_X, CLK_R
t_{CDC}	Clock Duty Cycle ((t_{CLX}/t_{CY}) X100)		50		%	CLK_X, CLK_R
t_r, t_f	Clock Rise and Fall Time	5		30	ns	CLK_X, CLK_R

Transmit Section — Fixed Data Rate Mode

Symbol	Parameter	Limits			Unit	Test Conditions
		Min	Typ[1]	Max		
t_{DZX}	Data Enabled on TS Entry		70		ns	$0 < C_{LOAD} < 100$ pF
t_{DDX}	Data Delay from $DCLK_x$		125		ns	
t_{HZX}	Data Float on TS Exit		110		ns	$C_{LOAD} = 0$
t_{SON}	Timeslot X to Enable		70		ns	$0 < C_{LOAD} < 100$ pF
t_{SOFF}	Timeslot X to Disable		110		ns	$C_{LOAD} = 0$
t_{FSD}	Frame Sync Delay		50		ns	Timing relationship between FS_R and CLK_R
t_{SS}	Signal Setup Time	0			ns	Relative to Bit-7 Falling Edge
t_{SH}	Signal Hold Time	2			μs	Relative to Bit-8 Falling Edge

Receive Section — Fixed Data Rate Mode

Symbol	Parameter	Limits			Unit	Test Conditions
		Min	Typ[1]	Max		
t_{DSR}	Receive Data Setup		30		ns	
t_{DHR}	Receive Data Hold		50		ns	
t_{FSD}	Frame Sync Delay		50		ns	Timing relationship between FS_R and CLK_R
t_{SIGR}	SIG_R Update		300		ns	From the trailing edge of the channel timeslot

Note 1: Typical values are for $T_A = 25°C$ and nominal power supply values.

A.C. CHARACTERISTICS (Continued)

Transmit Section — Variable Data Rate Mode

Symbol	Parameter	Limits			Unit	Test Conditions
		Min	Typ[1]	Max		
t_{TSDX}	Timeslot Delay		15		ns	TS_XI
t_{WSX}	Transmit Timeslot Clock Width ($DCLK_X$/8)		$8/f_{DX}$		μs	
t_{DDX}	Data Delay from $DCLK_X$		125		ns	
t_{DON}	Timeslot to D_X Active		35		ns	0 < C_{LOAD} < 100 pF
t_{DOFF}	Timeslot to D_X Inactive		40		ns	0 < C_{LOAD} < 100 pF
f_{DX} (min)	Data Clock Frequency		64		kHz	Duty Cycle = 50%
f_{DX} (max)	Data Clock Frequency		4096		kHz	Duty Cycle = 50%
f_{TSXI}	Timeslot Clock Frequency		8		kHz	
t_f, t_r	Clock Rise and Fall Times		5	30	ns	TS_XI, $DCLK_X$

Receive Section — Variable Data Rate Mode

Symbol	Parameter	Limits			Unit	Test Conditions
		Min	Typ[1]	Max		
t_{TSDR}	Timeslot Delay		15	50	ns	TS_RI
t_{WSR}	Receive Timeslot Clock		$8/f_{DR}$		ns	
t_{DSR}	Data Setup Time		30		ns	
t_{DHR}	Data Hold Time		50		ns	
f_{DR} (min)	Data Clock Frequency		64		kHz	Duty Cycle = 50%
f_{DR} (max)	Data Clock Frequency		4096		kHz	Duty Cycle = 50%
t_r, t_f	Clock Rise and Fall Times	5		30	ns	TS_RI, D_R $DCLK_R$

Note 1: Typical values are for $T_A = 25°C$ and nominal power supply values.

WAVEFORMS

Fixed Data Rate Timing

TRANSMIT TIMING

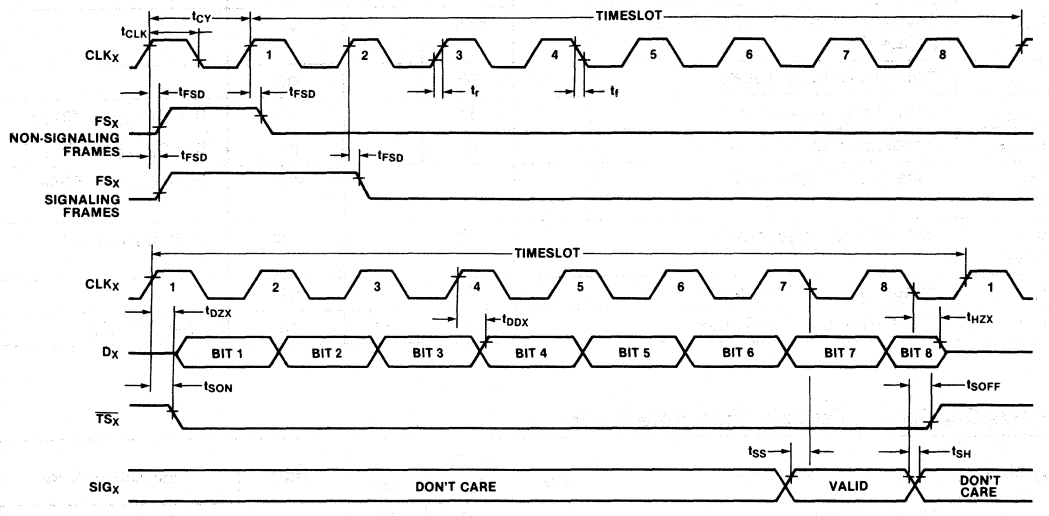

NOTE: ALL TIMING PARAMETERS REFERENCED TO V_{IH} and V_{IL} EXCEPT t_{DZX} AND t_{DHX} WHICH REFERENCE A HIGH IMPEDANCE STATE

RECEIVE TIMING

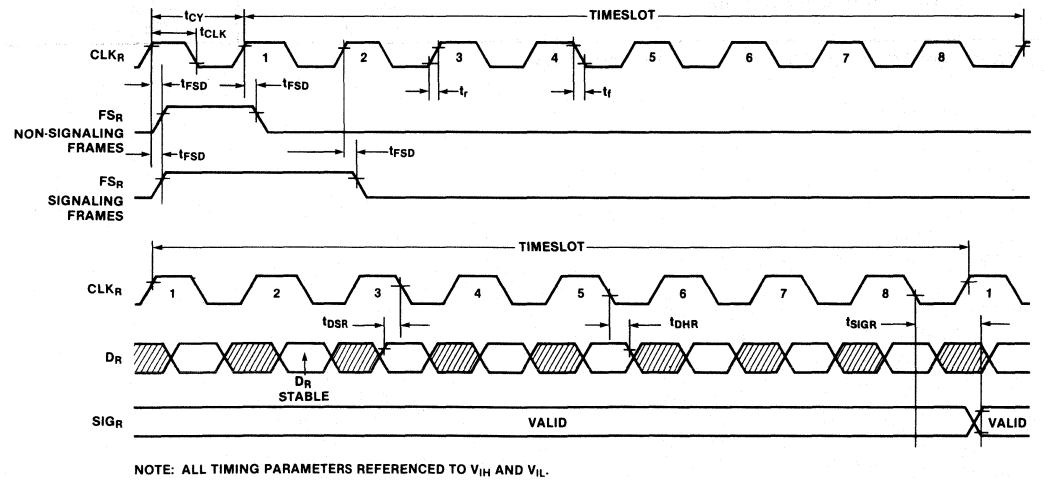

NOTE: ALL TIMING PARAMETERS REFERENCED TO V_{IH} AND V_{IL}.

Variable Data Rate Timing

TRANSMIT TIMING

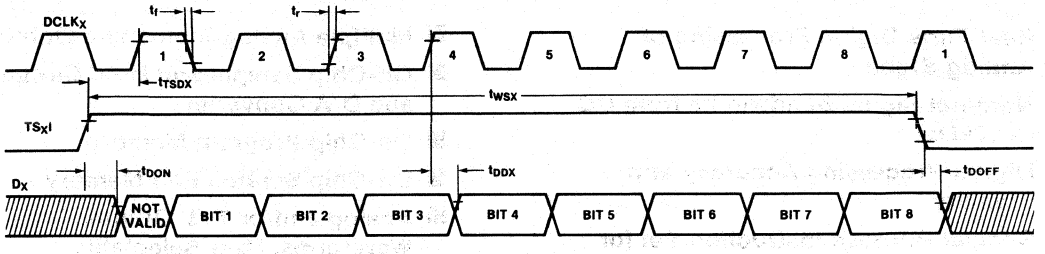

RECEIVE TIMING

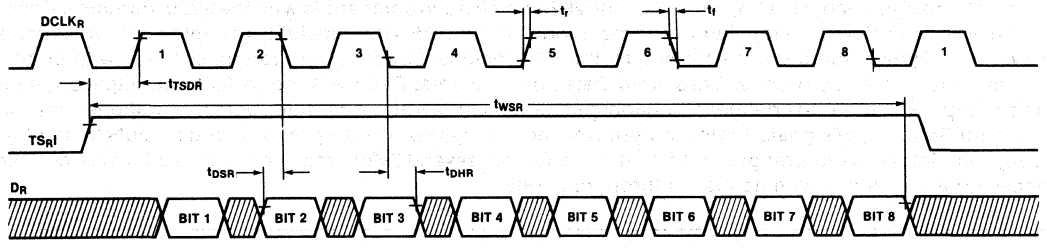

NOTE: ALL TIMING PARAMETERS REFERENCED TO V_{IH} AND V_{IL} EXCEPT t_{DON} AND t_{OFF} WHICH REFERENCE A HIGH IMPEDANCE STATE.

2920/2921
SIGNAL PROCESSOR

- **2920—User-Programmable/Erasable EPROM Program Memory (T_{CYC} = 600 ns)**
- **2921—Mask-Programmable ROM Program Memory (T_{CYC} = 400 ns)**

- **Real Time Digital Processing of Analog Signals**
- **Nominal Signal Bandwidths from DC to 10kHz**
- **Digital Processing Accuracy and Stability**
- **Special Purpose Instruction Set for Signal Processing**
- **INTELLEC® Compatible Development System Software and Hardware**
- **Multiple Analog Inputs and Outputs**
- **On-Chip Sample and Hold Circuits and D/A Converter**
- **On-Chip Program Memory**
- **On-Chip Scratch Pad Memory**
- **Analog and/or TTL Output Waveforms, User Selectable**
- **±5V Power Supplies**
- **N-MOS Process**

The Intel 2920 Signal Processor is a programmable, single chip analog and digital signal processor specifically designed to replace analog subsystems in real time processing applications. The 2921 is an improved performance mask programmable (ROM) version of the 2920 which is pin compatible with the 2920. Its instruction set plus the high precision (25 bits) digital arithmetic logic unit provides the capability to implement very complex subsystems. Typical functions performed by the 2920 include: Lowpass and Bandpass filters with up to 20 complex pole and/or zero pairs; Threshold Detectors; Limiters; Rectifiers; up to 25-bit multiplication and division; approximations to nonlinear functions such as square law and logarithm; logical operations; input and Output multiplexing of signals; logical outputs for decision-type processing; and analog outputs for multifrequency oscillators, waveform generators, etc. In addition, several 2920's may be cascaded for very complex processing applications with no loss in throughput rate.

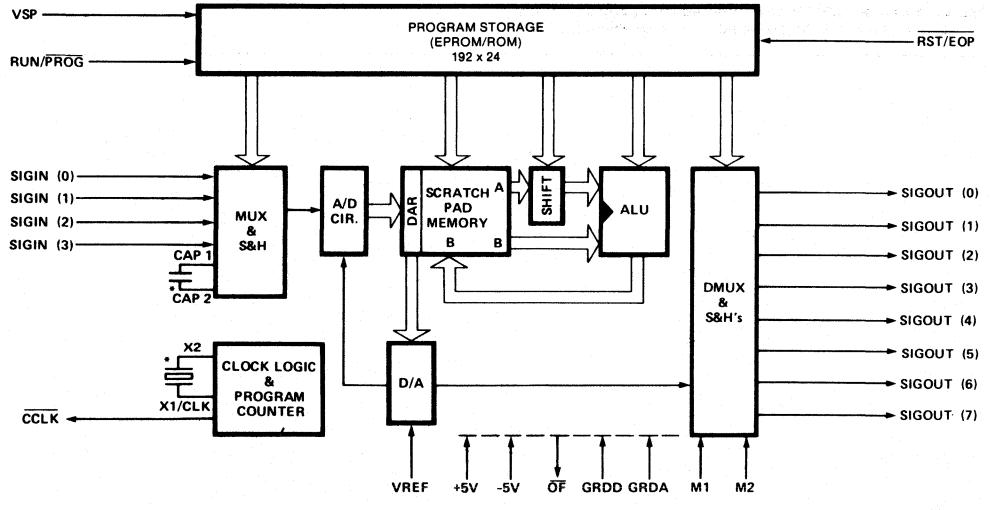

*EXTERNAL COMPONENTS (2921 has on-chip S&H capacitor)

Figure 1. Functional Block Diagram (Run Mode)

Table 1. Pin Description (Run Mode)

Symbol	Function
SIGOUT	8 pins corresponding to the 8 demultiplexed analog outputs (0-7).
GRDA	Analog signal ground held at or near GRDD typically.
CAP_1 & CAP_2	External capacitor connections for the input signal sample and hold circuit. Not required for 2921.
VREF	Input Reference Voltage
SIGIN	4 pins corresponding to the 4 multiplexed analog inputs (0-3).
V_{BB}	Most negative power pin set at -5 volts during run mode (different voltage in program mode).
X_2/CLK	Clock input when using external clock signals; oscillator input for external crystal when using internal clock.
X1	Oscillator input for external crystal when using internal clock.
GRDD	Digital ground.
V_{CC}	5 volts in run mode.
$\overline{CCLK}$	Internal fetch cycle clock output. The falling edge designates the START of a new PROM fetch cycle. $\overline{CCLK}$ is 1/16 of X_2/CLK rate.
RUN/$\overline{PROG}$	Mode control tied to GRDD in run mode.
$\overline{RST}$/$\overline{EOP}$	Low $\overline{RST}$ input initializes program fetch counter to first location. As an output it signifies EOP instruction present (open drain, active low.)
$\overline{OF}$	Indicates an overflow in the current ALU operation (open drain, active low).
VSP	EPROM/ROM power Pin, 0 volts for RUN mode (different voltage in program/verify mode).
M1, M2	Two pins which specify the output mode of the SIGOUT pins (see Table 8).

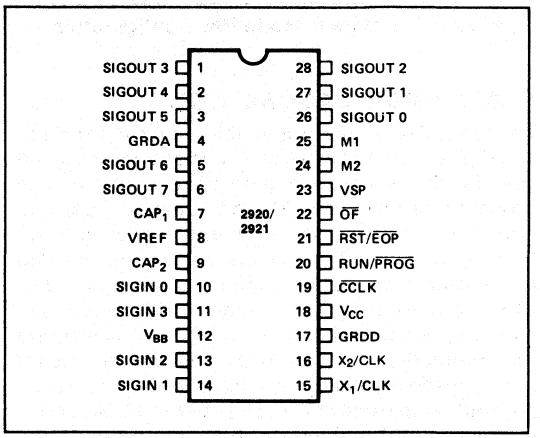

Figure 2. Run Mode Pin Configuration

Table 2. Pin Description (Program/Verify Mode)

Symbol	Function
D0,D1,D2,D3	4 pins carrying EPROM program data for both input and output (open drain, active low output; active high input).
V_{B1},V_{B2}, V_{B3},V_{B4}	Digital ground in PROGRAM mode (different voltage for RUN mode).
V_{S1},V_{S2},V_{S3}	+5 volts in PROGRAM mode (function changes for RUN mode).
$\overline{INCR}$	Input pulse increments the nibble (4-bits) counter in PROG mode (function changes in RUN mode).
VSP	EPROM/ROM power pin, +5 volts for VERIFY mode. For 2920 program mode pin is +25 volts (different voltage in RUN mode).
PROG/$\overline{VER}$	Controls EPROM bi-directional data bus for verify (low) or program (high).
$\overline{RST}$	Input pulse resets nibble counter to position zero for start of programming.

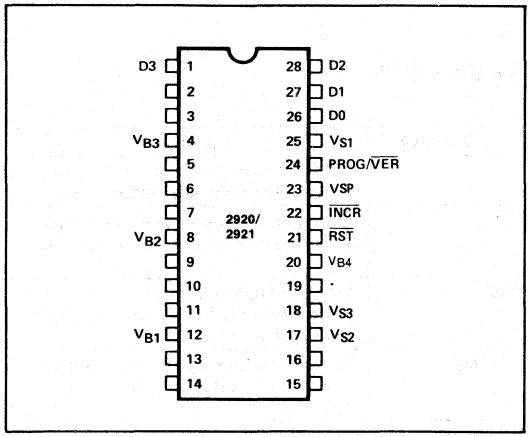

Figure 3. Program Mode Pin Configuration

FUNCTIONAL DESCRIPTION

The Intel 2920 is a programmable, single chip analog and digital signal processor which has been designed specifically to replace analog systems in real-time processing applications. The 2920 operates its analog circuitry simultaneously with the digital circuitry thereby achieving the efficiency and speed needed for real-time operation. Digital Circuitry includes: EPROM/ROM program storage, RAM scratch pad memory, clock and timing circuitry, binary scaler, and the arithmetic logic unit (ALU). The analog circuitry is composed of 4 analog inputs, an input multiplexer, an input sample and hold (S&H), A/D and D/A converters, an output multiplexer, 8 analog outputs, and buffered output S&H's.

Once the EPROM/ROM is programmed, the 2920 is ready for operation as an analog subsystem. The following signal flow and operations can be described with reference to the functional block diagram shown in Figure 1.

Clock and Timing Logic

The 2920/2921 can use an external clock or can generate its own clock with an external crystal placed across Pins 15 and 16. The program counter is incremented one instruction count for every 4 master clock cycles and continues to increment until it reaches a count of 191 or an EOP instruction is executed. Instructions are executed sequentially and no program jumps are provided. The sample rate is determined by the number of instructions in the program and the instruction cycle time. A 6.67MHz clock (600 nsec instruction cycle time) and a full 192 instructions will result in a sample rate of 8680Hz.

Program Storage and Control

The EPROM/ROM is made up of 192 words with 24-bits per word. Each 24-bit word contains 6 instruction fields (see Table 3) which control the individual subsystems in the 2920.

RAM

The memory consists of a random-access read/write array organized as 40 words of 25-bits each. The address space is extended to provide constants and access to a register (DAR) for interfacing the memory-ALU with the analog conversion section. The RAM is a two port memory where the "A" location is Read Only and passes via a scaler to the ALU as one operand. The "B" location data passes to the ALU input as its second operand and the ALU result is written back to it. Both the RAM and the ALU represent data in two's complement format. All operations are performed in two's complement arithmetic. Program operations are simplified by assuming the binary point to the right of the sign bit.

An extended address space is used to generate constants within the program. It is accessed through the "A" port only and may be addressed using the last 16 locations of the "A" address field (i.e., "A" address 11XXXX). The constant is determined by the 4 least significant "A" address bits.

These 4 bits are treated as the 4 most significant bits at the input to the binary shifter. A sequence of extended addresses with shift operations can generate any constant up to 25 bits long.

The DAR is 9 bits wide and can be accessed in several ways. As a memory location, the DAR occupies the 9 most significant bit positions of the 25-bit word and can be accessed as "A" and/or "B" port. The DAR output is also tied directly to the D/A converter inputs and is used as a successive approximation register for A/D conversion under control of the analog function instruction fields. Each bit position of the DAR can also be selected and tested for conditional arithmetic operations.

Binary Shifter

The 2920 has a binary shifter between the memory "A" port output and the ALU "A" operand input. This feature allows the "A" operand to be scaled by any magnitude between 2^{2} and 2^{-13} (left shift 2 to right shift 13). When a number is shifted right vacated bit positions are filled with the sign bit. (2's complement arithmetic shift). Shift op codes are shown in Table 4.

ALU

The Arithmetic-Logic Unit calculates a 25-bit result based on an operation performed on the scaled "A" and the "B" operands delivered from memory. The 25-bit result is written back into the "B" memory location near the end of the instruction cycle. The ALU has logic to accommodate the left shift scaling. For arithmetic operations, this logic is used to calculate a 25-bit result for normal operations and to maintain the sign bit when an overflow occurs. An overflow occurs only when the magnitude of the result is larger than the

largest number that can be stored in memory (25 bits). In that event, the result is set to the largest magnitude value with the correct sign. This overflow algorithm protects the continuity of the digitized analog signals and helps maintain the stability of the signal processing functions implemented. It is analogous to an overdriven amplifier going into saturation.

Instruction Set

The 2920 assembler uses the following program format to specify the 24-bit instruction word stored in the EPROM:

ALU INSTRUCTION (3 BITS)	B ADDRESS (6 BITS)	A ADDRESS (6 BITS)	SHIFT CODE (4 BITS)	ANALOG INSTRUCTION (5 BIT)

All processing subsystems are implemented using a combination of analog and digital instructions to input and output signals and/or data, and to realize the processing functions, respectively.

The analog input and output instructions are IN(K) and OUT(K), respectively. A sequence of IN(K) instructions followed by the sign conversion and amplitude conversion instructions CVTS and CVT(K) respectively are used to perform the input A/D conversion.

A simple sequence of OUT(K) instructions is all that is needed to output a 9-bit amplitude on channel K.

Other analog instructions are the EOP instruction which resets the program counter, NOP which is simply a no-operation, and CNDS or CND(K) which are conditional operators which select and test a bit in the DAR for the conditional ADD or LDA instructions or define the destination of the carry bit for the conditional SUB instruction.

If used, the EOP instruction must be placed at a program location up to location 188 which is a multiple of four. The three instructions immediately following the EOP instruction will be executed. The $\overline{RST}/\overline{EOP}$ output pulse requires an EOP instruction.

The ALU arithmetic instructions are ADD,SUB,LDA which perform the operations of addition, subtraction, and data transfer respectively. When these instructions are conditioned, they may be used to perform multiplication or division by a variable or data dependent switching.

Other digital instructions include the absolute value ABS, the absolute value and add ABA, and the ideal limit instruction LIM.

These instructions and their corresponding op codes are detailed in Table 5.

Table 3. Nibble Organization for Loading Program

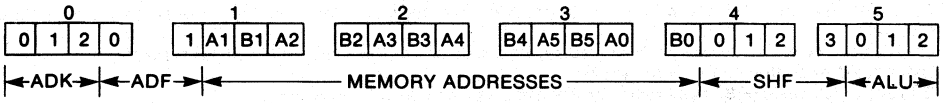

Note: The input pins for each nibble bit from left to right are D0, D1, D2, D3.

Table 4. Shift OP Codes

Operation	Mnemonic	Op Code				Scale Factor
		3	2	1	0	
Shift Right 13 Bits	R13	1	1	0	0	2^{-13}
Shift Right 12 Bits	R12	1	0	1	1	2^{-12}
⋮	⋮	⋮	⋮	⋮	⋮	⋮
Shift Right 1 Bit	R01	0	0	0	0	2^{-1}
No Shift	R00	1	1	1	1	1
Shift Left 1 Bit	L01	1	1	1	0	2
Shift Left 2 Bits	L02	1	1	0	1	4

Table 5. Instruction Set and OP Codes

Mnemonics		Op-Codes[1]			Operations			Notes
Code	Condition	ALU	ADF	ADK				
Digital Instructions		0,1,2	0,1	2,1,0				
ADD		011	↑	↑	$(Ax2^N) + B \longrightarrow B$			
SUB		101			$B - (Ax2^N) \longrightarrow B$			
LDA		111			$(Ax2^N) + 0 \longrightarrow B$			
XOR		000			$(Ax2^N) \oplus B \longrightarrow B$			
AND		100			$(Ax2^N) \cdot B \longrightarrow B$			
ABS		110			$\lvert(Ax2^N)\rvert \longrightarrow B$			
ABA[11]		001	[3]	[3]	$\lvert(Ax2^N)\rvert + B \longrightarrow B$			
LIM		010			Sign(A) → ± F.S. → B[4]			
ADD	CND( )[2]	011			$(Ax2^N) + B \longrightarrow B$	IFF DAR(K) = 1		
					$B \longrightarrow B$	IFF DAR(K) = 0		
SUB	CND( )[2][8]	101			$B - (Ax2^N) \longrightarrow B$	& CY → DAR(K)	IFF $CY_P = 1$	[5]
					$B + (Ax2^N) \longrightarrow B$	& CY → DAR(K)	IFF $CY_P = 0$	
LDA	CND( )[2]	111			$(Ax2^N) \longrightarrow B$		IFF DAR(K) = 1	
					$B \longrightarrow B$		IFF DAR(K) = 0	
ABA[11]	CND( )[9]	001			$(Ax2^N) + B \longrightarrow B$			
XOR	CND( )[9]	000			$(Ax2^N) \oplus B \longrightarrow B$			
Analog Instructions								
IN(K)		↑	00	0-3	Signal Sample from Input Channel K			
OUT(K)			10	0-7	D/A to Output Channel K			
CVTS			00	6	Determine Sign Bit			
CVT(K)			01	0-7	Perform A/D on Bit K			
EOP		[7]	00	5	Program Counter to Zero			[6]
NOP			00	4	No Operation			
CND(K)			11	0-7	Select Bit K for Conditional Instructions			
CNDS		↓	00	7	Select Sign Bit for Conditional Instructions			

Notes:
1. Op codes ALU and ADF are in binary notation, ADK is in decimal notation and represents the value "K" when appropriate.
2. CND( ) can be either CND(K) or CNDS testing amplitude bits or the sign bit of the DAR respectively.
3. Determined by analog instructions below.
4. B is set to full scale (F.S.) amplitude with the same sign as the "A" port operand.
5. The previous carry bit (CY_P) is tested to determine the operation. The present carry bit (CY) is loaded into the Kth bit location of the DAR. "Present carry (CY) is generated independent of overflow. It will represent the carry (CY) of a calculated 28-bit result."
6. EOP will also enable overflow correction if it was disabled during a program pass.
7. Determined by digital instructions above.
8. For SUB CNDS operation $\overline{CY} \rightarrow$ DAR(S).
9. Does not affect DAR. In this case, CND is used with XOR/ABA to enable/disable the ALU overflow saturation algorithm. Use of either instruction causes the ALU output to roll over rather than go to full scale with sign bit preserved. An EOP instruction will also enable the ALU overflow saturation algorithm.
10. Clarification of CY_{OUT} sense for certain operations. For LDA, XOR, AND, ABS; $CY_{OUT} \rightarrow 0$.
11. Recommend that the ABS & ADD instructions be used in place of ABA. The ABA instruction typically runs 2 MHz slower. The saturation logic, however can be set and reset at full speed.

Input Multiplexer and S&H

The input channels consist of four analog sampling switches which use a common sampling capacitor (external capacitor for the 2920, internal for the 2921). The external capacitor should be approximately 500pF to yield an offset of less than -½ LSB. The acquisition time should be approximately six times the RC time constant of the sample and hold circuitry (i.e., 500pF times 1.5KΩ equals 750 nsec). Acquisition time equal to six or more time constants should keep the input crosstalk to below -54dB. For systems which require less dynamic range, the input acquisition time can be reduced. For 600 nsec cycle approximately eight IN(K) instructions would be required. For serial digital inputs, fewer IN(K) instructions can be used. For systems with 2920 cycle times much greater than 600 nsec the external sampling capacitor should be increased to 1000pF to reduce the droop rate with a corresponding increase in the RC time constant.

A/D—D/A Conversion

The successive approximation analog to digital conversion is performed under program control. It uses the CVTS instruction first to set the sign bit and the CVT(K) instruction to determine the value of the Kth DAR bit starting with the MSB. NOPs equivalent to 1.2 μsec must follow each CVT(K) instruction to allow the D/A to settle. The suggested conversion sequence for nine bit resolution with the 2920 cycle time equal to 600 nsec is shown below in Table 6. Digital inputs and inputs with less than nine bits resolution will have a shorter sequence.

Table 6. Suggested Input and Conversion Sequence

Digital	Analog	Digital	Analog
. . . .	IN(K)	. . . .	CVT5
. . . .	IN(K)	. . . .	NOP
. . . .	IN(K)	. . . .	NOP
. . . .	IN(K)	. . . .	CVT4
. . . .	IN(K)	. . . .	NOP
. . . .	IN(K)	. . . .	NOP
. . . .	IN(K)	. . . .	CVT3
. . . .	IN(K)	. . . .	NOP
. . . .	NOP	. . . .	NOP
. . . .	CVTS	. . . .	CVT2
. . . .	NOP	. . . .	NOP
. . . .	NOP	. . . .	NOP
. . . .	CVT7	. . . .	CVT1
. . . .	NOP	. . . .	NOP
. . . .	NOP	. . . .	NOP
. . . .	CVT6	. . . .	CVT0
. . . .	NOP		
. . . .	NOP		

Continue Next Column

where "." equals available digital instruction

Output Demultiplexer and S&Hs

The 2920's eight analog output channels include a sample and hold circuit per channel demultiplexed from a common, buffered D/A output. Two rules for outputting samples are: (1) No outputting should be done while writing to the DAR; (2) A sequence of 3 analog NOP instructions should be used to settle the D/A converter, and a sequence of OUT(K) instructions equal to 3.5 μsec should be used to settle the S&H output. The suggested sequence for a nine bit resolution output with a 600 nsec cycle time is outlined in Table 7.

Table 7. Suggested Output Sequence

Digital	Analog
LDA,DAR,X,R0,	NOP
. . . . .	NOP
. . . . .	NOP
. . . . .	NOP
. . . . .	OUT(K)
. . . . .	OUT(K)
. . . . .	OUT(K)
. . . . .	OUT(K)
. . . . .	OUT(K)
. . . . .	OUT(K)

where K = desired output, "." available digital instruction

Conditional operations should not immediately precede or follow an OUT instruction. Otherwise a CND(K) may affect the value of the Kth output.

TTL Output

The SIGOUT(K) pins can be selected to be either analog out or TTL compatible as seen in Table 8. The analog mode allows the full 9-bit D/A output to be present. The LIM instruction can be used to yield a "0" or "1" decision for the TTL mode. This output can be presented to the SIGOUT(K) pins and is compatible to a single TTL gate or equivalent. The internal threshold required is 1.5 volts for a high level output. An external pullup resistor to V_{CC} is also required.

Table 8. Output Mode for SIGOUT Pins as Function of M1 and M2

M1	M2	SIGOUT Pins
5V	5V	0-7 Analog
5V	-5V	0-3 Analog, 4-7 TTL
-5V	5V	0-3 TTL, 4-7 Analog
-5V	-5V	0-7 TTL

Reference Voltage

The internal D/A converter requires a single positive reference voltage (VREF) to establish its voltage range. This user supplied reference can range from 1V to 2V. The resulting input and output signal voltage range is

±VREF. If the TTL output is required, VREF >1.5V is necessary. The minimum voltage step (LSB) of the D/A converter is $V_{REF}/256$ volts. Voltage variations on V_{REF} will appear as noise to the D/A converter. It is therefore necessary to provide a noise free voltage source for the reference. The input signal voltage range is (±VREF) -½ LSB.

EPROM PROGRAMMING

The 2920 EPROM in the programming mode is arranged as a 1152-by-4-bit memory. Each instruction (24 bits) is loaded as 6 nibbles (4 bits) as seen in Table 3. Figure 7 shows the timing relationships of the signals required to program and verify the EPROM contents. In the program mode all voltages are referenced to V_{BB} which is set to digital ground, thereby allowing TTL logic to be used for controlling the programming cycle. The D pins are bidirectional with the direction controlled by the PROG/$\overline{VER}$ pin. A high level at the PROG/$\overline{VER}$ pin switches to input mode, a low to output mode (see Figure 7). This feature allows the programmed data to be verified before going on to the next address.

The internal nibble counter is incremented during the falling edge of $\overline{INCR}$. 1152 INCR transitions will complete the full program cycle. To initialize at address (nibble) 0, RST must be pulsed low, then $\overline{INCR}$ can be issued. From then on, programming is accomplished according to Figure 7.

The RUN/$\overline{PROG}$ pin must be tied to V_{BB} and VSP should be pulsed between +5V and +25 ±1V at 15mA maximum. The D pins have an open drain in the output direction.

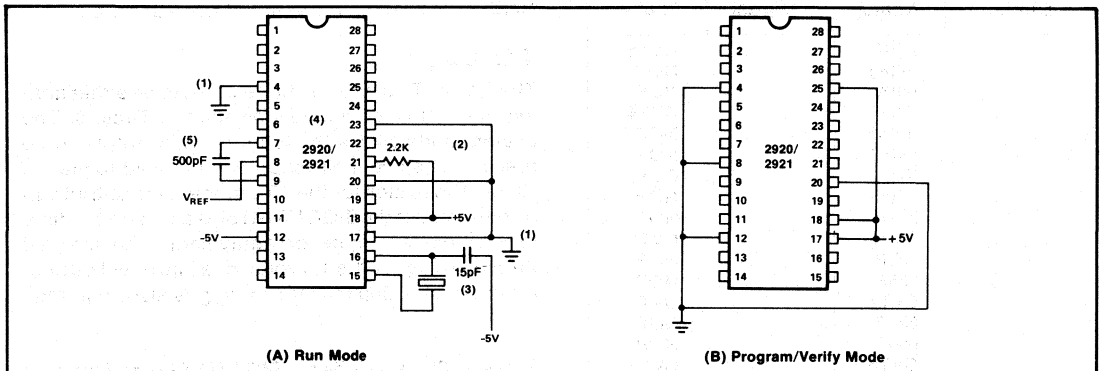

(A) Run Mode (B) Program/Verify Mode

Notes:
1. Analog grounding is connected to the GRDA lead. The GRDA and GRDD lead are not connected inside the 2920. An external connection is thus necessary outside the device to tie all the analog ground lines to the common return of the system GRDD. That external connection has to have a minimal impedance (ground plane) to avoid a DC offset in the 2920.
2. Pullup resistor at Pin 21 is required.
3. Stray capacitance must also be considered. The sum should not exceed 15pF.
4. Opaque tape must cover EPROM window during run mode.
5. Sampling capacitor not required for 2921. If capacitor is not present, tie to GRDD for 2921.

Figure 4. Typical Power Hookups for Run and Program Mode

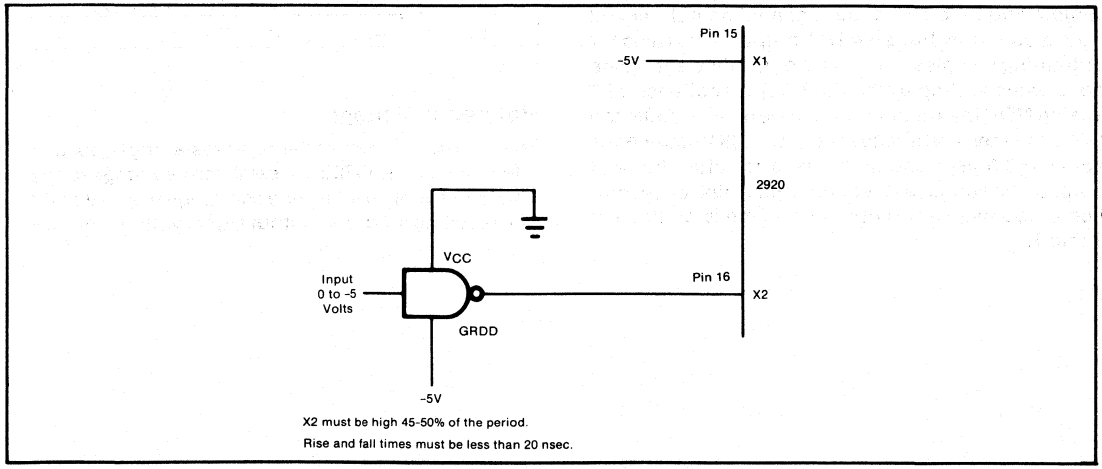

X2 must be high 45-50% of the period.
Rise and fall times must be less than 20 nsec.

Figure 5. External Clock Driver

2920 DEVELOPMENT SUPPORT TOOLS

Support tools for the 2920 are based on the Intellec® Microcomputer Development Systems. A 2920 Software Support Package (SPS-20) consisting of the Signal Processing Applications Software/Compiler (SPAS-20), the 2920 Software Simulator, and the 2920 Assembler is available to facilitate design and development efforts. EPROM programming support includes the Intel EPROM programmer and the 2920 personality module (UPP-820). A complete Signal Processing Support System (MCI-20-DS1) consisting of the Microcomputer Development System, the 2920 Software Support Package, the EPROM programmer and personality module is recommended and is available at a reduced price.

The 2920 Signal Processing Applications Software/Compiler is an interactive tool for designing software to be executed on the 2920 Signal Processor. The compiler accepts English-like statements from the user and generates 2920 assembly language code.

The assembler translates symbolic 2920 assembly language programs into the machine operation codes. The user can load the codes into the 2920 simulator or to the Universal EPROM Programmer for programming the 2920 itself.

The simulator, operating entirely in software, allows the user to test and debug 2920 programs. The user can specify input signals, simulate program execution, set up breakpoints, display input and output, display and alter the contents of the 2920 registers and memory locations, and graph the output waveforms.

The compiler, assembler and simulator enable the designer to develop and test an entire program without programming the device. The 2920 designer works at the Intellec® Microcomputer Development System rather than at a breadboard. The development system facilitates the designing and testing of 2920 applications.

The SDK-2920 contains all of the components required to assemble a complete single board microcomputer system for programming and evaluation of the 2920 Analog Signal Processor. The 8085/8041A microcomputer-based program development section allows you to immediately enter programs in 2920 assembly mnemonics, translate them to 2920 object code, and program the on-board 2920 EPROM. The kit supports basic filing options such as up/down loading to/from an Intellec, audio cassette, and line printer. The SDK-2920 also provides the user with a 2920 run mode section allowing real-time execution of a programmed 2920. This section comes complete with BNC connectors and Intel's 2912 PCM line filters required for one input and one output network. The kit supports optional input and output circuitry on the run mode section.

ABSOLUTE MAXIMUM RATINGS*

Temperature Under Bias ..... -40°C to +85°C
Storage Temperature ..... -65°C to +150°C
V_{CC} Supply with Respect to GRDD ..... +5.5V
V_{BB} Supply with Respect to GRDD ..... -5.5V
Analog Inputs with Respect to GRDA .... -5.5V to +5.5V
Power Dissipation 2920 (at 70°C)..... 1 W
2921 (at 70°C)..... 1W

**NOTICE: Stresses above those listed under "Absolute Maximum Ratings" may cause permanent damage to the device. This is a stress rating only and functional operation of the device at these or any other conditions above those indicated in the operational sections of this specification is not implied. Exposure to absolute maximum rating conditions for extended periods may affect device reliability.*

D.C. CHARACTERISTICS (Run Mode) (T_A = 0°C to +70°C; V_{CC} =5V ±5%; V_{BB} = -5V ±5%)

ANALOG (SIGIN(K), SIGOUT(K))

		2920			2921				
Symbol	**Parameter**	**Min**	**Typ**	**Max**	**Min**	**Typ**	**Max**	**Units**	**Test Conditions**
Z_I	Input Impedance		100			100		KΩ	Unsampled Input
Z_{SH}	S&H Impedance		1.5			1.5		KΩ	Series resistance with S&H
	A/D Resolution			9			9	bits	
	Input Differential Linearity		±1			±1		LSB	
	Input Integral Linearity		±1			±1		LSB	
T_A	Aperture		5			5		nsec	Equivalent SNR = 60dB @ 10kHz
X_I	Input Crosstalk		-54			-54		dB	Input to input
V_{ID}	Input Droop Rate		50			TBD		uv/us	500pF cap. with dark cover (2920 only)
V_{IR}	Input Voltage Range			±VREF			±VREF	V	
V_{IOS}	Input Zero Offset		8			TBD		mV	
I_{IZC}	Input Zero Crossing Error		12			0		mV	
G_I	Input Gain		1			1			
	Gain Error		2			0		%	ratio of Neg. & Pos. gains
T_{IA}	Input Acquisition Time		4.5			3.2		μs	9 bit resolution*
Z_O	Output Impedance		1			1		KΩ	
I_O	Output Drive Current		400			400		μA	20pF load
	D/A Resolution			9			9	bits	
	Output Differential Linearity		±½			±½		LSB	SIGOUT load 100KΩ -1< SIGOUT < 1
	Output Integral Linearity		±1			±1		LSB	SIGOUT load 100K -1 < SIGOUT < 1
X_O	Output Crosstalk		-54			-54		dB	Output to output
V_{OD}	Output Droop Rate		0.2			0.2		mv/μsec	@ 70°C with dark cover
V_{OR}	Output Voltage Range	-2		+2	-2		+2	V	
V_{OOS}	Output Zero Offset			-100		TBD		mV	
V_{OZC}	Output Zero Crossing Error		8			0		mV	
G_O	Output Gain		0.85			1		V/V	
	Gain Error		TBD			0		%	ratio of Neg. & Pos. Gains
T_{OA}	Output Acquisition Time		3.5			3.5		μs	9 bit resolution*
G_T	Throughput Gain		0.85			1		V/V	A/D to D/A
VREF	Voltage Reference Level	1.0		2.0	1.0		2.0	V	
I_{VR}	Voltage Reference Current	60		115		TBD		μA	VREF equal 1 volts

*See text for explanation.

DIGITAL ($\overline{OF}$,$\overline{CCLK}$,$\overline{EOP}$, SIGOUT in TTL mode)

Symbol	Parameter	2920			2921			Units	Test Conditions
		Min	Typ	Max	Min	Typ	Max		
I_{IL}	Low Level Input Current			10			10	μA	$V_{IN} < V_{IL}$ Driving $\overline{RST}$
I_{IH}	High Level Input Current			10			10	μA	$V_{IN} < V_{IH}$ Driving $\overline{RST}$
V_{IL}	Input Low Voltage			0.8			0.8	V	
V_{IH}	Input High Voltage	2.0			2.0			V	
V_{IXL}	Input Low Voltage, X2/CLK	-4.5		-5	-4.5		-5	V	
V_{IXH}	Input High Voltage, X2/CLK	-2.6		0	-2.6		0	V	
V_{OL}	Output Low Voltage			0.4			0.4	V	I_{OL} = 2.5mA, CCLK ONLY
I_{OL}	Output High Current		2			2		mA	$\overline{EOP}$,$\overline{OF}$,$\overline{CCLK}$, SIGOUT. V_{OL} = 0.4V
I_{OH}	Output Low Current		10			10		μA	$\overline{EOP}$,$\overline{OF}$,$\overline{CCLK}$ SIGOUT

POWER DISSIPATION

I_{CC}	Operating Current		30	50		50		mA	V_{CC} = 5.25V
I_{BB}	Operating Current		110	150		150		mA	V_{BB} = -5.25V

A.C. CHARACTERISTICS (Run Mode) (T_A = 0°C to + 70°C; V_{CC} = 5V; V_{BB} = -5V)

F_{OSC}			6.67			10		MHz	Oscillator frequency
T_{CYC}	Instruction Cycle Period		600			400		ns	4 clock cycles
T_{CE}	Cycle Start to EOP Valid		160			TBD		ns	
T_{EH}	EOP Hold Time		T_{CYC}			T_{CYC}		ns	
T_{FH}	OF Hold Time		T_{CYC}			T_{CYC}		ns	
T_{CW}	CCLK Pulse Width		T_{CYC}			T_{CYC}		ns	
T_{CO}	Cycle Start to $\overline{OF}$ Valid		T_{CYC}			T_{CYC}		ns	

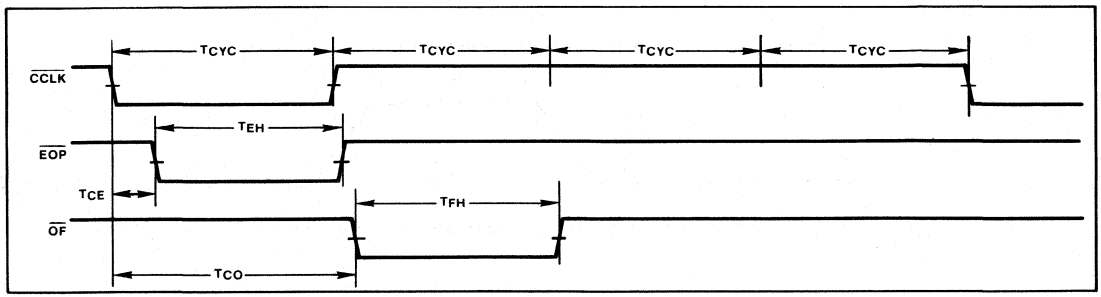

Figure 6. Run Mode Timing

D.C. CHARACTERISTICS (Program/Verify Mode) (T_A = 0°C to +70°C; V_{SS} =5V; V_{BB} = 0V)

Symbol	Parameter	2920 Min	2920 Typ	2920 Max	2921 Min	2921 Typ	2921 Max	Units	Test Conditions	
I_{TL}	Low Level Input Current			10			10	μA	$V_{IN} < V_{IL}$	
I_{IH}	High Level Input Current			10			10	μA	$V_{IN} < V_{IH}$	
V_{IL}	Input Low Voltage			0.8			0.8	V		
V_{IH}	Input High Voltage	2.0			2.0			V		
V_{OL}	Output Low Voltage			0.8			0.8	V	I_{OL} = 2.5mA	
I_{SP}	Program Pulse Current			16	—	—	—	mA	Data Input=0000	
V_{P1}	Program Pulse ON Voltage	24	25	26	—	—	—	V		2920 Only
V_{P2}	Program Pulse OFF Voltage		5		—	—	—	V		
POWER DISSIPATION (Program/Verify Mode)										
I_{SS}	Operating Current		100			TBD		mA	V_{SS} = 5V+10%	

A.C. CHARACTERISTICS (Program/Verify Mode) (T_A = 0°C to +70°C; V_{SS} =5V; V_{BB} = 0V)

T_{RW}	Reset Pulse Width	1000			1000			ns	
T_{RS}	Reset to Increment Set-up	200			200			ns	
T_{RH}	Reset Hold	300			300			ns	
T_{IW}	Increment Pulse Width	1			1			μs	
T_{VP}	Data in Set-Up to Prog. Pulse	2			2			μs	
T_{PW}	Program Pulse Width (2920)	50		55	—	—	—	ms	
	Verify Hold Time (2921)	—	—	—	50		55	ms	
T_{PV}[1]	Program to Verify Settling	1			1			μs	
T_{ACC}	Verify Access Time	20			20			μs	
T_{VI}	End of Verify to Increment	100			100			ns	

NOTE: 1. VSP must not undershoot 5V by more than 0.5V. Add undershoot settling time to T_{PV}.
*25V program pulse must NOT be applied to 2921.

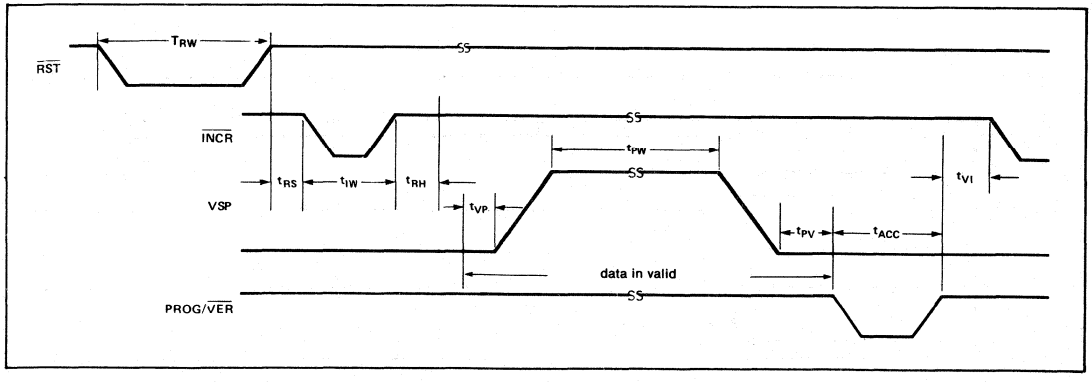

Figure 7. 2920 Program/Verify, 2921 Verify Timing

Automotive

5

PRELIMINARY

P80A49H/P80A39HL

HMOS SINGLE COMPONENT 8-BIT MICROCOMPUTER

Automotive

- **P80A49H—Mask Programmable ROM—8MHz**
- **P80A39HL—CPU Only with Power Down**

- **Extended Temperature Range of -40° C to +110° C in Low-Cost Plastic Package**
- **Reduced Power Consumption, High Performance HMOS**
- **Interval Timer/Event Counter**
- **1.88 μsec Cycle Time (8.0MHz)**
- **2K x 8 ROM**
  128 x 8 RAM
  27 I/O Lines
- **Two Single Level Interrupts**
- **Over 90 Instructions: 70% Single Byte**

Intel Corporation has recognized the need for high performance, single-chip, microcomputers that operate in the extended temperature and rigorous environment of an automobile. To meet this need, Intel has developed automotive grade products which feature extended operating temperature ranges in cost-effective plastic packages for selected microcomputers. These automotive grade products have been characterized and tested to provide an optimum balance between cost and performance over the standard automotive temperature range of -40° C to +110° C.

Intel's automotive grade products are fully compatible with the corresponding standard products with respect to architecture, instruction set, programming, and software portability.

All automotive grade products are supported by extensive reliability and quality qualification tests, in-process testing, and product monitor testing. This testing program has been designed to ensure that the automotive grade products comply with the rigorous reliability and quality requirements of the automotive industry.

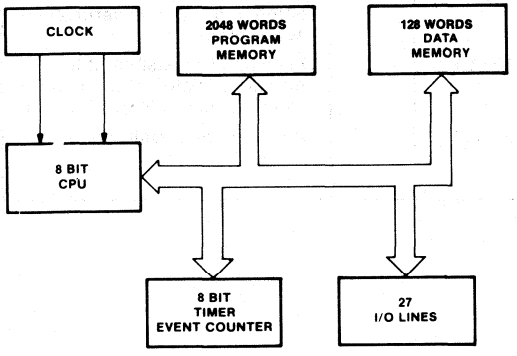

Figure 1. Block Diagram

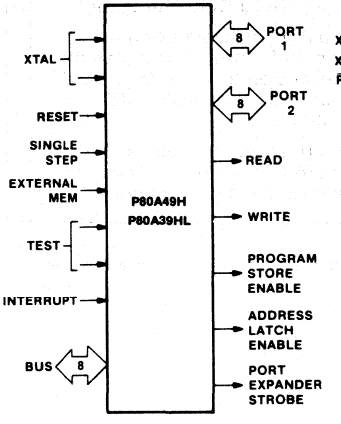

Figure 2. Logic Symbol

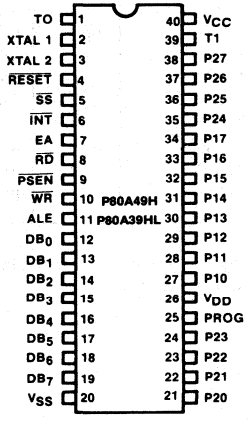

Figure 3. Pin Configuration (top view)

The following are trademarks of Intel Corporation and its affiliates and may be used only to identify Intel products: i, Intel, INTEL, INTELLEC, MCS, m, iCS, ICE, UPI, BXP, iSBC, iSBX, Insite, iRMX, System 2000, CREDIT, iRMX/80, MULTIBUS, PROMPT, Promware, Megachassis, Library Manager, MAIN MULTIMODULE, and the combination of MCS, ICE, iSBC, iRMX or iCS and a numerical suffix. © INTEL CORPORATION, 1981.

AFN-01999A
AUGUST 1981

Table 1. Pin Description

Symbol	Pin No.	Function
V_{SS}	20	Circuit GND potential
V_{DD}	26	Low power standby pin
V_{CC}	40	Main power supply; +5V during operation.
PROG	25	Output strobe for 8243 I/O expander.
P10-P17 Port 1	27-34	8-bit quasi-bidirectional port.
P20-P27 Port 2	21-24 & 35-38	8-bit quasi-bidirectional port. P20-P23 contain the four high order program counter bits during an external program memory fetch and serve as a 4-bit I/O expander bus for 8243.
DB0-DB7 BUS	12-19	True bidirectional port which can be written or read synchronously using the $\overline{RD}$, $\overline{WR}$ strobes. The port can also be statically latched. Contains the 8 low order program counter bits during an external program memory fetch, and receives the addressed instruction under the control of $\overline{PSEN}$. Also contains the address and data during an external RAM data store instruction, under control of ALE, $\overline{RD}$, and $\overline{WR}$.
T0	1	Input pin testable using the conditional transfer instructions JT0 and JNT0. T0 can be designated as a clock output using ENT0 CLK instruction.
T1	39	Input pin testable using the JT1, and JNT1 instructions. Can be designated the timer/counter input using the STRT CNT instruction.
$\overline{INT}$	6	Interrupt input. Initiates an interrupt if interrupt is enabled. Interrupt is disabled after a reset.* Also testable with conditional jump instruction. (Active low)
$\overline{RD}$	8	Output strobe activated during a BUS read. Can be used to enable data onto the bus from an external device. Used as a read strobe to external data memory. (Active low)
$\overline{RESET}$	4	Input which is used to initialize the processor. (Active low) (Non TTL V_{IH})
$\overline{WR}$	10	Output strobe during a bus write. (Active low) Used as write strobe to external data memory.
ALE	11	Address latch enable. This signal occurs once during each cycle and is useful as a clock output. The negative edge of ALE strobes address into external data and program memory.
$\overline{PSEN}$	9	Program store enable. This output occurs only during a fetch to external program memory. (Active low)
$\overline{SS}$	5	Single step input can be used in conjunction with ALE to "single step" the processor through each instruction. (Active low)
EA	7	External access input which forces all program memory fetches to reference external memory. Useful for emulation and debug, and essential for testing and program verification. (Active high)
XTAL1	2	One side of crystal input for internal oscillator. Also input for external source. (Non TTL V_{IH})
XTAL2	3	Other side of crystal input.

*Interrupt pin must remain low for at least $3t_{CY}$ to ensure proper operation.

Table 2. Instruction Set

Accumulator

Mnemonic	Description	Bytes	Cycles
ADD A, R	Add register to A	1	1
ADD A, @R	Add data memory to A	1	1
ADD A, # data	Add immediate to A	2	2
ADDC A, R	Add register with carry	1	1
ADDC A, @R	Add data memory with carry	1	1
ADDC A, # data	Add immediate with carry	2	2
ANL A, R	And register to A	1	1
ANL A, @R	And data memory to A	1	1
ANL A, # data	And immediate to A	2	2
ORL A, R	Or register to A	1	1
ORL A @R	Or data memory to A	1	1
ORL A, # data	Or immediate to A	2	2
XRL A, R	Exclusive or register to A	1	1
XRL A, @R	Exclusive or data memory to A	1	1
XRL, A, # data	Exclusive or immediate to A	2	2
INC A	Increment A	1	1
DEC A	Decrement A	1	1
CLR A	Clear A	1	1
CPL A	Complement A	1	1
DA A	Decimal adjust A	1	1
SWAP A	Swap nibbles of A	1	1
RL A	Rotate A left	1	1
RLC A	Rotate A left through carry	1	1
RR A	Rotate A right	1	1
RRC A	Rotate A right through carry	1	1

Input/Output

Mnemonic	Description	Bytes	Cycles
IN A, P	Input port to A	1	2
OUTL P, A	Output A to port	1	2
ANL P, # data	And immediate to port	2	2
ORL P, # data	Or immediate to port	2	2
INS A, BUS	Input BUS to A	1	2
OUTL BUS, A	Output A to BUS	1	2
ANL BUS, # data	And immediate to BUS	2	2
ORL BUS, # data	Or immediate to BUS	2	2
MOVD A,P	Input expander port to A	1	2
MOVD P, A	Output A to expander port	1	2
ANLD P, A	And A to expander port	1	2
ORLD P, A	Or A to expander port	1	2

Registers

Mnemonic	Description	Bytes	Cycles
INC R	Increment register	1	1
INC @R	Increment data memory	1	1
DEC R	Decrement register	1	1

Branch

Mnemonic	Description	Bytes	Cycles
JMP addr	Jump unconditional	2	2
JMPP @A	Jump indirect	1	2
DJNZ R, addr	Decrement register and skip	2	2
JC addr	Jump on carry = 1	2	2
JNC addr	Jump on carry = 0	2	2
JZ addr	Jump on A zero	2	2
JNZ addr	Jump on A not zero	2	2
JTO addr	Jump on TO = 1	2	2
JNTO addr	Jump on TO = 0	2	2
JT1 addr	Jump on T1 = 1	2	2
JNT1 addr	Jump on T1 = 0	2	2
JF0 addr	Jump on F0 = 1	2	2
JF1 addr	Jump on F1 = 1	2	2
JTF addr	Jump on timer flag	2	2
JN1 addr	Jump on INT = 0	2	2
JBb addr	Jump on accumulator bit	2	2

Subroutine

Mnemonic	Description	Bytes	Cycles
CALL addr	Jump to subroutine	2	2
RETR	Return	1	2
RETR	Return and restore status	1	2

Flags

Mnemonic	Description	Bytes	Cycles
CLR C	Clear carry	1	1
CPL C	Complement carry	1	1
CLR F0	CLear flag 0	1	1
CPL F0	Complement flag 0	1	1
CLR F1	Clear flag 1	1	1
CPL F1	Complement flag 1	1	1

Data Moves

Mnemonic	Description	Bytes	Cycles
MOV A, R	Move register to A	1	1
MOV A, @R	Move data memory to A	1	1
MOV A, # data	Move immediate to A	2	2
MOV R, A	Move A to register	1	1
MOV @R, A	Move A to data memory	1	1
MOV R, # data	Move immediate to register	2	2
MOV @R, #data	Move immediate to data memory	2	2
MOV A, PSW	Move PSW to A	1	1
MOV PSW, A	Move A to PSW	1	1
XCH A, R	Exchange A and register	1	1
XCH A, @R	Exchange A and data memory	1	1
XCHD A, @R	Exchange nibble of A and register	1	
MOVX A, @R	Move external data memory to A	1	2
MOVX @R, A	Move A to external data memory	1	2
MOVP A, @A	Move to A from current page	1	2
MOVP3 A, @ A	Move to A from page 3	1	2

Timer/Counter

Mnemonic	Description	Bytes	Cycles
MOV A, T	Read timer/counter	1	1
MOV T, A	Load timer/counter	1	1
STRT T	Start timer	1	1
STRT CNT	Start counter	1	1
STOP TCNT	Stop timer/counter	1	1
EN TCNT1	Enable timer/counter interrupt	1	1
DIS TCNT1	Disable timer/counter interrupt	1	1

Control

Mnemonic	Description	Bytes	Cycles
EN 1	Enable external interrupt	1	1
DIS 1	Disable external interrupt	1	1
SEL RB0	Select register bank 0	1	1
SEL RB1	Select register bank 1	1	1
SEL MB0	Select memory bank 0	1	1
SEL MB1	Select memory bank 1	1	1
ENT0 CLK	Enable clock output on T0	1	1

Mnemonic	Description	Bytes	Cycles
NOP	No operation	1	1

ABSOLUTE MAXIMUM RATINGS*

Ambient Temperature Under Bias ... -40°C to +110°C
Storage Temperature ..... -65°C to +150°C
Voltage on Any Pin with Respect to Ground ..... -0.5V to +7V
Power Dissipation ..... 1.5 Watt

** NOTICE: Stresses above those listed under "Absolute Maximum Ratings" may cause permanent damage to the device. This is a stress rating only and functional operation of device at these or any other conditions above those indicated in the operational sections of this specification is not implied. Exposure to absolute maximum rating conditions for extended periods may affect device reliability.*

D.C. CHARACTERISTICS (T_A = -40°C to +110°C, V_{CC} = V_{DD} = 5V ± 10%, V_{SS} = 0V)

Symbol	Parameter	P80A49H P80A39HL			Unit	Test Conditions
		Min	Typ*	Max		
V_{IL}	Input Low Voltage (All Except $\overline{RESET}$, X1, X2)	-.5		.7	V	
V_{IL1}	Input Low Voltage ($\overline{RESET}$, X1, X2)	-.5		.6	V	
V_{IH}	Input High Voltage (All Except XTAL1, XTAL2, $\overline{RESET}$)	2.2		V_{CC}	V	
V_{IH1}	Input High Voltage (X1, X2, $\overline{RESET}$)	3.8		V_{CC}	V	
V_{OL}	Output Low Voltage (BUS)			.45	V	I_{OL} = 2.0 mA
V_{OL1}	Output Low Voltage ($\overline{RD}$, $\overline{WR}$, $\overline{PSEN}$, ALE)			.45	V	I_{OL} = 1.8 mA
V_{OL2}	Output Low Voltage (PROG)			.45	V	I_{OL} = 0.8 mA
V_{OL3}	Output Low Voltage (All Other Outputs)			.45	V	I_{OL} = 1.6 mA
V_{OH}	Output High Voltage (BUS)	2.4			V	I_{OH} = -400 μA
V_{OH1}	Output High Voltage ($\overline{RD}$, $\overline{WR}$, $\overline{PSEN}$, ALE)	2.4			V	I_{OH} = -100 μA
V_{OH2}	Output High Voltage (All Other Outputs)	2.4			V	I_{OH} = -30 μA
I_{L1}	Input Leakage Current (T1, $\overline{INT}$)			± 10	μA	$V_{SS} \leqslant V_{IN} \leqslant V_{CC}$
I_{LI1}	Input Leakage Current (P10-P17, P20-P27, EA, $\overline{SS}$)			-600	μA	V_{SS} + .45 $\leqslant V_{IN} \leqslant V_{CC}$
I_{L0}	Output Leakage Current (BUS,T0) (High Impedance State)			± 10	μA	V_{SS} + .45 $\leqslant V_{IN} \leqslant V_{CC}$
I_{DD}	V_{DD} Supply Current (power down)		5 10	10 20	mA	T_A = +25°C Full Temp. Range
I_{DD} + I_{CC}	Total Supply Current		50 75	100 145	mA	T_A = 25°C Full Temp. Range
V_{DD}	RAM Standby PIN Voltage	3.0		5.5	V	Standby Mode, Reset $\leqslant$ 0.6V

*Typical = typical unit with V_{CC}, V_{DD} = +5.0V

A.C. CHARACTERISTICS (T_A = -40°C to +110°C, V_{CC} = V_{DD} = 5V ± 10%, V_{SS} = 0V)

Symbol	Parameter	f (t_{CY}) (Note 3)	P80A49H P80A39HL		Unit	Conditions (Note 1)
			Min	Max		
t_{LL}	ALE Pulse Width	7/30 t_{CY} -170	260		ns	
t_{AL}	Addr Setup to ALE	1/5 t_{CY} -110	260		ns	
t_{LA}	Addr Hold from ALE	1/15 t_{CY} -40	80		ns	
t_{CC1}	Control Pulse Width ($\overline{RD}$, $\overline{WR}$)	1/2 t_{CY} -200	740		ns	
t_{CC2}	Control Pulse Width ($\overline{PSEN}$)	2/5 t_{CY} -200	550		ns	
t_{DW}	Data Setup before $\overline{WR}$	13/30 t_{CY} -200	610		ns	
t_{WD}	Data Hold after $\overline{WR}$	1/15 t_{CY} -50	70		ns	(Note 2)
t_{DR}	Data Hold ($\overline{RD}$, $\overline{PSEN}$)	1/10 t_{CY} -30	0	160	ns	
t_{RD1}	$\overline{RD}$ to Data in	2/5 t_{CY} -200		550	ns	
t_{RD2}	$\overline{PSEN}$ to Data in	3/10 t_{CY} -200		360	ns	
t_{AW}	Addr Setup to $\overline{WR}$	2/5 t_{CY} -150	600		ns	
t_{AD1}	Addr Setup to Data ($\overline{RD}$)	23/30 t_{CY} -250		1190	ns	
t_{AD2}	Addr Setup to Data ($\overline{PSEN}$)	3/5 t_{CY}-250		870	ns	
t_{AFC1}	Addr Float to $\overline{RD}$, $\overline{WR}$	2/15 t_{CY} -40	210		ns	
t_{AFC2}	Addr Float to $\overline{PSEN}$	1/30 t_{CY} -40	20		ns	
t_{LAFC1}	ALE to Control ($\overline{RD}$, $\overline{WR}$)	1/5 t_{CY} -75	300		ns	
t_{LAFC2}	ALE to Control ($\overline{PSEN}$)	1/10 t_{CY} -75	110		ns	
t_{CA1}	Control to ALE ($\overline{RD}$, $\overline{WR}$, $\overline{PROG}$)	1/15 t_{CY} -40	80		ns	
t_{CA2}	Control to ALE ($\overline{PSEN}$)	4/15 t_{CY} -40	460		ns	
t_{CP}	Port Control Setup to $\overline{PROG}$	2/15 t_{CY} -80	170		ns	
t_{PC}	Port Control Hold to $\overline{PROG}$	4/15 t_{CY} -200	300		ns	
t_{PR}	$\overline{PROG}$ to P2 Input Valid	6/10 t_{CY} -120		1000	ns	
t_{PF}	Input Data Hold from $\overline{PROG}$	1/10 t_{CY}	0	190	ns	
t_{DP}	Output Data Setup	2/5 t_{CY} -150	600		ns	
t_{PD}	Output Data Hold	1/10 t_{CY} -50	140		ns	
t_{PP}	$\overline{PROG}$ Pulse Width	7/10 t_{CY} -250	1060		ns	
t_{PL}	Port 2 I/O Setup to ALE	4/15 t_{CY} -200	300		ns	
t_{LP}	Port 2 I/O Hold to ALE	1/10 t_{CY} -100	90		ns	
t_{PV}	Port Output from ALE	3/10 t_{CY} +100		660	ns	
t_{CY}	Cycle Time	(1/f_{XTAL}) x 15	1.88		μs	(Note 4)
t_{0PRR}	T0 Rep Rate	3/15 t_{CY}	370		ns	

Notes:

1. Control Outputs C_L = 80 pF
   BUS Outputs C_L = 150 pF
2. BUS High Impedance Load 20 pF
3. Equation to calculate theoretical AC timing parameters at frequency of choice. Calculated values will be equal to or better than published values. Equation assumes 50% duty cycle on X1, X2.
4. Maximum t_{CY} = 15.0 μs (1.0MHz).

WAVEFORMS

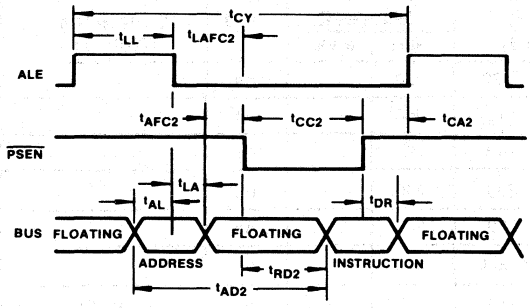

Instruction Fetch From External Program Memory

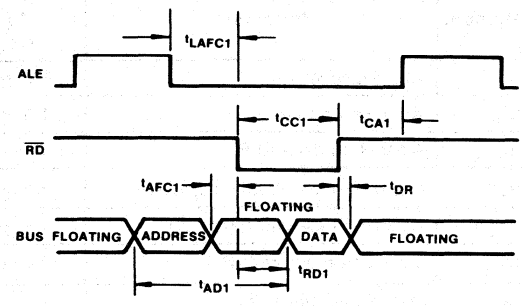

Read From External Data Memory

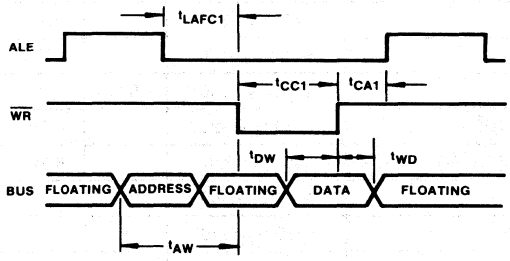

Write to External Data Memory

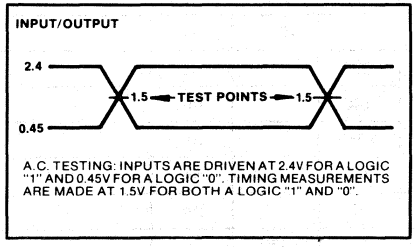

Figure 4. A.C. Testing Input, Output Waveform

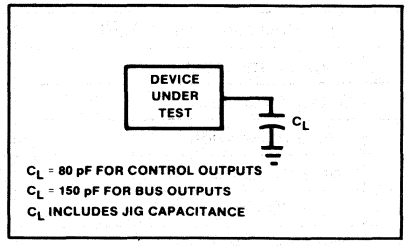

Figure 5. A.C. Testing Load Circuit

PORT 2 EXPANDER TIMING

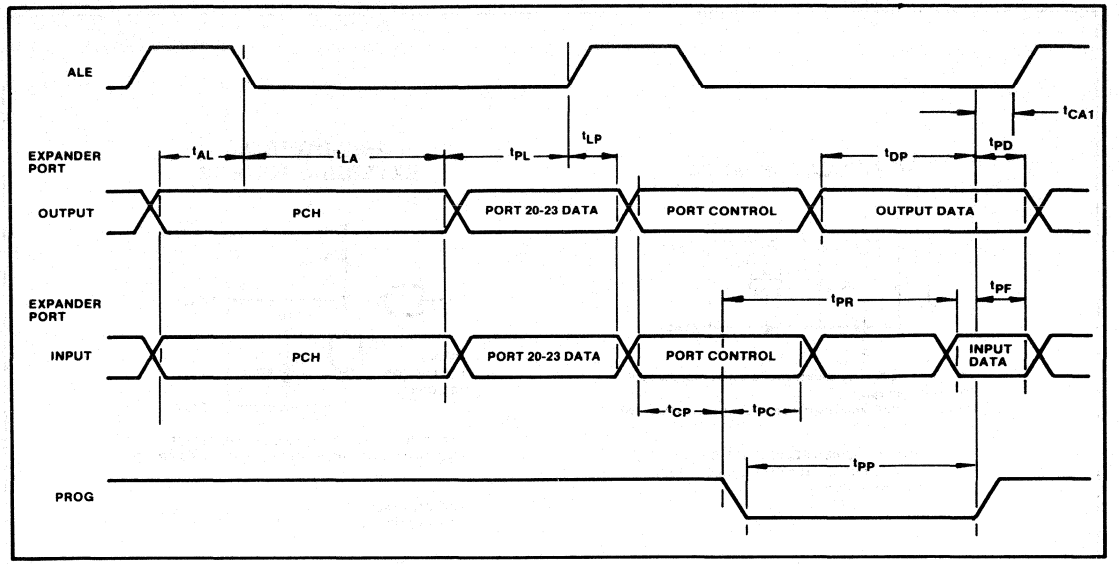

I/O PORT TIMING

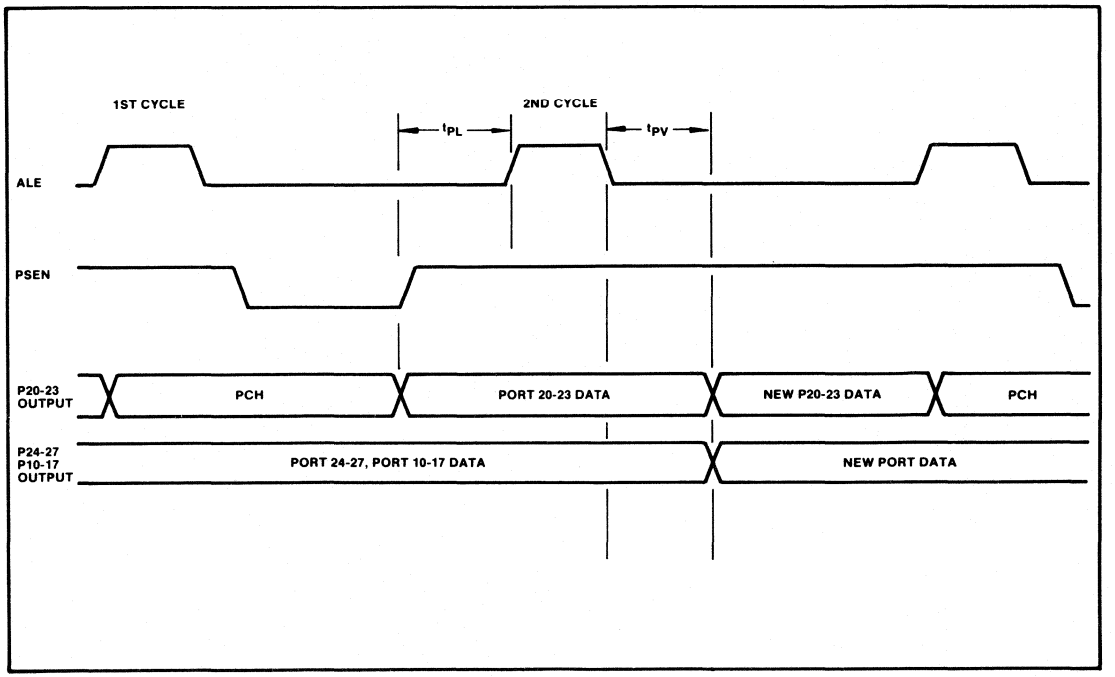

TYPICAL OSCILLATOR MODES

OSCILLATOR MODE

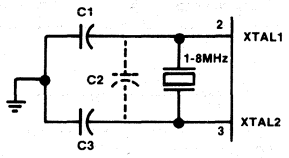

C1 = 5pF ± ½pF, stray capacitance must be less than 5pF
C2 = less than 8pF
C3 = 20pF ± 1pF, stray capacitance must be less than 5pF

CRYSTAL SERIES RESISTANCE SHOULD BE LESS THAN 75 Ω AT 8MHz; LESS THAN 180 Ω AT 3.6MHz.

DRIVING FROM EXTERNAL SOURCE

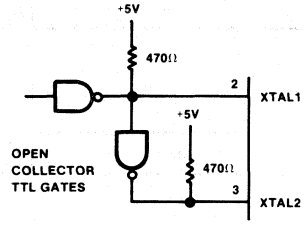

XTAL1 MUST BE HIGH 35-65% OF THE PERIOD, AND XTAL2 MUST BE HIGH 35-65% OF THE PERIOD.

RISE AND FALL TIMES MUST NOT EXCEED 20ns.

Intel Corporation Assumes No Responsibility for the Use of Any Other Circuitry Other Than Circuitry Embodied in an Intel Product. No Other Circuit Patent Licenses Are Implied.

P80A48L

HMOS SINGLE COMPONENT 8-BIT MICROCOMPUTER

Automotive

- **P80A48L—Mask Programmable ROM—4MHz**

- **Extended Temperature Range of -40° C to +110° C in Low-Cost Plastic Package**
- **Reduced Power Consumption, High Performance HMOS**
- **Interval Timer/Event Counter**
- **3.75 μsec Cycle Time (4.0MHz)**
- **1K x 8 ROM**
  64 x 8 RAM
  27 I/O Lines
- **Two Single Level Interrupts**
- **Over 90 Instructions: 70% Single Byte**

Intel Corporation has recognized the need for high performance, single-chip, microcomputers that operate in the extended temperature and rigorous environment of an automobile. To meet this need, Intel has developed automotive grade products which feature extended operating temperature ranges in cost-effective plastic packages for selected microcomputers. These automotive grade products have been characterized and tested to provide an optimum balance between cost and performance over the standard automotive temperature range of -40° C to +110° C.

Intel's automotive grade products are fully compatible with the corresponding standard products with respect to architecture, instruction set, programming, and software portability.

All automotive grade products are supported by extensive reliability and quality qualification tests, in-process testing, and product monitor testing. This testing program has been designed to ensure that the automotive grade products comply with the rigorous reliability and quality requirements of the automotive industry.

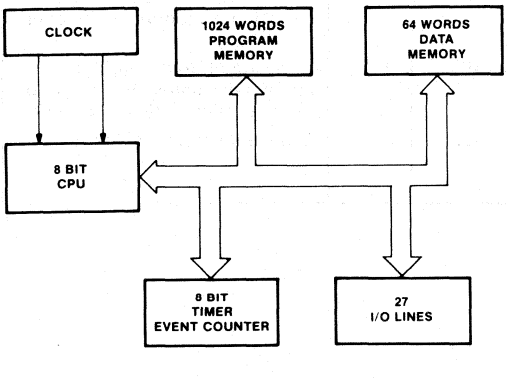

Figure 1. Block Diagram

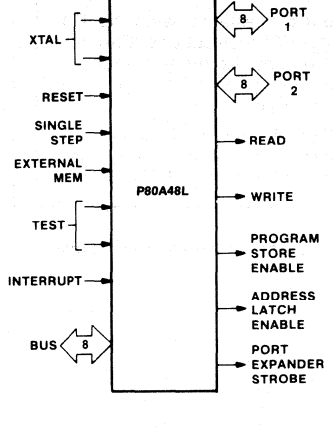

Figure 2. Logic Symbol

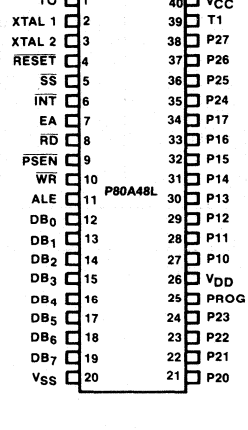

Figure 3. Pin Configuration (top view)

The following are trademarks of Intel Corporation and its affiliates and may be used only to identify Intel products: i, Int$_e$l, INTEL, INTELLEC, MCS, ^{l}m, iCS, ICE, UPI, BXP, iSBC, iSBX, Insite, iRMX, System 2000, CREDIT, iRMX/80, MULTIBUS, PROMPT, Promware, Megachassis, Library Manager, MAIN MULTIMODULE, and the combination of MCS, ICE, iSBC, iRMX or iCS and a numerical suffix. © INTEL CORPORATION, 1981.

AFN-02000A
AUGUST 1981

Table 1. Pin Description

Symbol	Pin No.	Function
V_{SS}	20	Circuit GND potential
V_{DD}	26	Low power standby pin
V_{CC}	40	Main power supply; +5V during operation.
PROG	25	Output strobe for 8243 I/O expander.
P10-P17 Port 1	27-34	8-bit quasi-bidirectional port.
P20-P27 Port 2	21-24 & 35-38	8-bit quasi-bidirectional port. P20-P23 contain the four high order program counter bits during an external program memory fetch and serve as a 4-bit I/O expander bus for 8243.
DB0-DB7 BUS	12-19	True bidirectional port which can be written or read synchronously using the $\overline{RD}$, $\overline{WR}$ strobes. The port can also be statically latched. Contains the 8 low order program counter bits during an external program memory fetch, and receives the addressed instruction under the control of $\overline{PSEN}$. Also contains the address and data during an external RAM data store instruction, under control of ALE, $\overline{RD}$, and $\overline{WR}$.
T0	1	Input pin testable using the conditional transfer instructions JT0 and JNT0. T0 can be designated as a clock output using ENT0 CLK instruction.
T1	39	Input pin testable using the JT1, and JNT1 instructions. Can be designated the timer/counter input using the STRT CNT instruction.
$\overline{INT}$	6	Interrupt input. Initiates an interrupt if interrupt is enabled. Interrupt is disabled after a reset.*

Symbol	Pin No.	Function
		Also testable with conditional jump instruction. (Active low)
$\overline{RD}$	8	Output strobe activated during a BUS read. Can be used to enable data onto the bus from an external device. Used as a read strobe to external data memory. (Active low)
$\overline{RESET}$	4	Input which is used to initialize the processor. (Active low) (Non TTL V_{IH})
$\overline{WR}$	10	Output strobe during a bus write. (Active low) Used as write strobe to external data memory.
ALE	11	Address latch enable. This signal occurs once during each cycle and is useful as a clock output. The negative edge of ALE strobes address into external data and program memory.
$\overline{PSEN}$	9	Program store enable. This output occurs only during a fetch to external program memory. (Active low)
$\overline{SS}$	5	Single step input can be used in conjunction with ALE to "single step" the processor through each instruction. (Active low)
EA	7	External access input which forces all program memory fetches to reference external memory. Useful for emulation and debug, and essential for testing and program verification. (Active high)
XTAL1	2	One side of crystal input for internal oscillator. Also input for external source. (Non TTL V_{IH})
XTAL2	3	Other side of crystal input.

*Interrupt pin must remain low for at least $3t_{CY}$ to ensure proper operation.

Table 2. Instruction Set

Accumulator

Mnemonic	Description	Bytes	Cycles
ADD A, R	Add register to A	1	1
ADD A, @R	Add data memory to A	1	1
ADD A, # data	Add immediate to A	2	2
ADDC A, R	Add register with carry	1	1
ADDC A, @R	Add data memory with carry	1	1
ADDC A, # data	Add immediate with carry	2	2
ANL A, R	And register to A	1	1
ANL A, @R	And data memory to A	1	1
ANL A, # data	And immediate to A	2	2
ORL A, R	Or register to A	1	1
ORL A @R	Or data memory to A	1	1
ORL A, # data	Or immediate to A	2	2
XRL A, R	Exclusive or register to A	1	1
XRL A, @R	Exclusive or data memory to A	1	1
XRL, A, # data	Exclusive or immediate to A	2	2
INC A	Increment A	1	1
DEC A	Decrement A	1	1
CLR A	Clear A	1	1
CPL A	Complement A	1	1
DA A	Decimal adjust A	1	1
SWAP A	Swap nibbles of A	1	1
RL A	Rotate A left	1	1
RLC A	Rotate A left through carry	1	1
RR A	Rotate A right	1	1
RRC A	Rotate A right through carry	1	1

Input/Output

Mnemonic	Description	Bytes	Cycles
IN A, P	Input port to A	1	2
OUTL P, A	Output A to port	1	2
ANL P, # data	And immediate to port	2	2
ORL P, # data	Or immediate to port	2	2
INS A, BUS	Input BUS to A	1	2
OUTL BUS, A	Output A to BUS	1	2
ANL BUS, # data	And immediate to BUS	2	2
ORL BUS, # data	Or immediate to BUS	2	2
MOVD A,P	Input expander port to A	1	2
MOVD P, A	Output A to expander port	1	2
ANLD P, A	And A to expander port	1	2
ORLD P, A	Or A to expander port	1	2

Registers

Mnemonic	Description	Bytes	Cycles
INC R	Increment register	1	1
INC @R	Increment data memory	1	1
DEC R	Decrement register	1	1

Branch

Mnemonic	Description	Bytes	Cycles
JMP addr	Jump unconditional	2	2
JMPP @A	Jump indirect	1	2
DJNZ R, addr	Decrement register and skip	2	2
JC addr	Jump on carry = 1	2	2
JNC addr	Jump on carry = 0	2	2
JZ addr	Jump on A zero	2	2
JNZ addr	Jump on A not zero	2	2
JTO addr	Jump on TO = 1	2	2
JNTO addr	Jump on TO = 0	2	2
JT1 addr	Jump on T1 = 1	2	2
JNT1 addr	Jump on T1 = 0	2	2
JF0 addr	Jump on F0 = 1	2	2
JF1 addr	Jump on F1 = 1	2	2
JTF addr	Jump on timer flag	2	2
JN1 addr	Jump on INT = 0	2	2
JBb addr	Jump on accumulator bit	2	2

Subroutine

Mnemonic	Description	Bytes	Cycles
CALL addr	Jump to subroutine	2	2
RETR	Return	1	2
RETR	Return and restore status	1	2

Flags

Mnemonic	Description	Bytes	Cycles
CLR C	Clear carry	1	1
CPL C	Complement carry	1	1
CLR F0	CLear flag 0	1	1
CPL F0	Complement flag 0	1	1
CLR F1	Clear flag 1	1	1
CPL F1	Complement flag 1	1	1

Data Moves

Mnemonic	Description	Bytes	Cycles
MOV A, R	Move register to A	1	1
MOV A, @R	Move data memory to A	1	1
MOV A, # data	Move immediate to A	2	2
MOV R, A	Move A to register	1	1
MOV @R, A	Move A to data memory	1	1
MOV R, # data	Move immediate to register	2	2
MOV @R, #data	Move immediate to data memory	2	2
MOV A, PSW	Move PSW to A	1	1
MOV PSW, A	Move A to PSW	1	1
XCH A, R	Exchange A and register	1	1
XCH A, @R	Exchange A and data memory	1	1
XCHD A, @R	Exchange nibble of A and register	1	
MOVX A, @R	Move external data memory to A	1	2
MOVX @R, A	Move A to external data memory	1	2
MOVP A, @A	Move to A from current page	1	2
MOVP3 A, @ A	Move to A from page 3	1	2

Timer/Counter

Mnemonic	Description	Bytes	Cycles
MOV A, T	Read timer/counter	1	1
MOV T, A	Load timer/counter	1	1
STRT T	Start timer	1	1
STRT CNT	Start counter	1	1
STOP TCNT	Stop timer/counter	1	1
EN TCNT1	Enable timer/counter interrupt	1	1
DIS TCNT1	Disable timer/counter interrupt	1	1

Control

Mnemonic	Description	Bytes	Cycles
EN 1	Enable external interrupt	1	1
DIS 1	Disable external interrupt	1	1
SEL RB0	Select register bank 0	1	1
SEL RB1	Select register bank 1	1	1
SEL MB0	Select memory bank 0	1	1
SEL MB1	Select memory bank 1	1	1
ENT0 CLK	Enable clock output on T0	1	1

Mnemonic	Description	Bytes	Cycles
NOP	No operation	1	1

ABSOLUTE MAXIMUM RATINGS*

Ambient Temperature Under Bias ... -40°C to +110°C
Storage Temperature ..... -65°C to +150°C
Voltage on Any Pin with Respect to Ground ..... -0.5V to +7V
Power Dissipation ..... 1.5 Watt

** NOTICE: Stresses above those listed under "Absolute Maximum Ratings" may cause permanent damage to the device. This is a stress rating only and functional operation of device at these or any other conditions above those indicated in the operational sections of this specification is not implied. Exposure to absolute maximum rating conditions for extended periods may affect device reliability.*

D.C. CHARACTERISTICS (T_A = -40°C to +110°C, V_{CC} = V_{DD} = 5V ± 10%, V_{SS} = 0V)

Symbol	Parameter	P80A48L			Unit	Test Conditions
		Min	Typ*	Max		
V_{IL}	Input Low Voltage (All Except $\overline{RESET}$, X1, X2)	-.5		.7	V	
V_{IL1}	Input Low Voltage ($\overline{RESET}$, X1, X2)	-.5		.6	V	
V_{IH}	Input High Voltage (All Except XTAL1, XTAL2, $\overline{RESET}$)	2.2		V_{CC}	V	
V_{IH1}	Input High Voltage (X1, X2, $\overline{RESET}$)	3.8		V_{CC}	V	
V_{OL}	Output Low Voltage (BUS)			.45	V	I_{OL} = 2.0 mA
V_{OL1}	Output Low Voltage ($\overline{RD}$, $\overline{WR}$, $\overline{PSEN}$, ALE)			.45	V	I_{OL} = 1.8 mA
V_{OL2}	Output Low Voltage (PROG)			.45	V	I_{OL} = 0.8 mA
V_{OL3}	Output Low Voltage (All Other Outputs)			.45	V	I_{OL} = 1.6 mA
V_{OH}	Output High Voltage (BUS)	2.4			V	I_{OH} = -400 μA
V_{OH1}	Output High Voltage ($\overline{RD}$, $\overline{WR}$, $\overline{PSEN}$, ALE)	2.4			V	I_{OH} = -100 μA
V_{OH2}	Output High Voltage (All Other Outputs)	2.4			V	I_{OH} = -30 μA
I_{L1}	Input Leakage Current (T1, $\overline{INT}$)			± 10	μA	$V_{SS} \leq V_{IN} \leq V_{CC}$
I_{LI1}	Input Leakage Current (P10-P17, P20-P27, EA, $\overline{SS}$)			-600	μA	V_{SS} + .45 $\leq V_{IN} \leq V_{CC}$
I_{LO}	Output Leakage Current (BUS,T0) (High Impedance State)			± 10	μA	V_{SS} + .45 $\leq V_{IN} \leq V_{CC}$
I_{DD}	V_{DD} Supply Current (power down)		1 4	4 6	mA	T_A = +25°C Full Temp. Range
I_{DD} + I_{CC}	Total Supply Current		15 30	20 50	mA	T_A = 25°C Full Temp. Range
V_{DD}	RAM Standby PIN Voltage	3.0		5.5	V	Standby Mode, Reset ≤ 0.6V

*Typical = typical unit with V_{CC}, V_{DD} = +5.0V, T_A = +25°C

A.C. CHARACTERISTICS (T_A = -40°C to +110°C, V_{CC} = V_{DD} = 5V ± 10%, V_{SS} = 0V)

Symbol	Parameter	f (t_{CY}) (Note 3)	P80A48L		Unit	Conditions (Note 1)
			Min	Max		
t_{LL}	ALE Pulse Width	7/30 t_{CY} -170	700		ns	
t_{AL}	Addr Setup to ALE	1/5 t_{CY} -110	640		ns	
t_{LA}	Addr Hold from ALE	1/15 t_{CY} -40	210		ns	
t_{CC1}	Control Pulse Width ($\overline{RD}$, $\overline{WR}$)	1/2 t_{CY} -200	1670		ns	
t_{CC2}	Control Pulse Width ($\overline{PSEN}$)	2/5 t_{CY} -200	1300		ns	
t_{DW}	Data Setup before $\overline{WR}$	13/30 t_{CY} -200	1420		ns	
t_{WD}	Data Hold after $\overline{WR}$	1/15 t_{CY} -50	200		ns	(Note 2)
t_{DR}	Data Hold ($\overline{RD}$, $\overline{PSEN}$)	1/10 t_{CY} -30	0	350	ns	
t_{RD1}	$\overline{RD}$ to Data in	2/5 t_{CY} -200		1300	ns	
t_{RD2}	$\overline{PSEN}$ to Data in	3/10 t_{CY} -200		920	ns	
t_{AW}	Addr Setup to $\overline{WR}$	2/5 t_{CY} -150	1350		ns	
t_{AD1}	Addr Setup to Data ($\overline{RD}$)	23/30 t_{CY} -250		2620	ns	
t_{AD2}	Addr Setup to Data ($\overline{PSEN}$)	3/5 t_{CY}-250		2000	ns	
t_{AFC1}	Addr Float to $\overline{RD}$, $\overline{WR}$	2/15 t_{CY} -40	460		ns	
t_{AFC2}	Addr Float to $\overline{PSEN}$	1/30 t_{CY} -40	80		ns	
t_{LAFC1}	ALE to Control ($\overline{RD}$, $\overline{WR}$)	1/5 t_{CY} -75	670		ns	
t_{LAFC2}	ALE to Control ($\overline{PSEN}$)	1/10 t_{CY} -75	300		ns	
t_{CA1}	Control to ALE ($\overline{RD}$, $\overline{WR}$, $\overline{PROG}$)	1/15 t_{CY} -40	210		ns	
t_{CA2}	Control to ALE ($\overline{PSEN}$)	4/15 t_{CY} -40	960		ns	
t_{CP}	Port Control Setup to $\overline{PROG}$	2/15 t_{CY} -80	420		ns	
t_{PC}	Port Control Hold to $\overline{PROG}$	4/15 t_{CY} -200	800		ns	
t_{PR}	$\overline{PROG}$ to P2 Input Valid	6/10 t_{CY} -120		2130	ns	
t_{PF}	Input Data Hold from $\overline{PROG}$	1/10 t_{CY}	0	380	ns	
t_{DP}	Output Data Setup	2/5 t_{CY} -150	1350		ns	
t_{PD}	Output Data Hold	1/10 t_{CY} -50	320		ns	
t_{PP}	$\overline{PROG}$ Pulse Width	7/10 t_{CY} -250	2370		ns	
t_{PL}	Port 2 I/O Setup to ALE	4/15 t_{CY} -200	800		ns	
t_{LP}	Port 2 I/O Hold to ALE	1/10 t_{CY} -100	270		ns	
t_{PV}	Port Output from ALE	3/10 t_{CY} +100		1220	ns	
t_{CY}	Cycle Time	(1/f_{XTAL}) x 15	3.75		μs	(Note 4)
t_{0PRR}	T0 Rep Rate	3/15 t_{CY}	750		ns	

Notes:

1. Control Outputs C_L = 80 pF
   BUS Outputs C_L = 150 pF
2. BUS High Impedance Load 20 pF
3. Equation to calculate theoretical AC timing parameters at frequency of choice. Calculated values will be equal to or better than published values. Equation assumes 50% duty cycle on X1, X2.
4. Maximum t_{CY} = 15.0 μs (1.0MHz).

WAVEFORMS

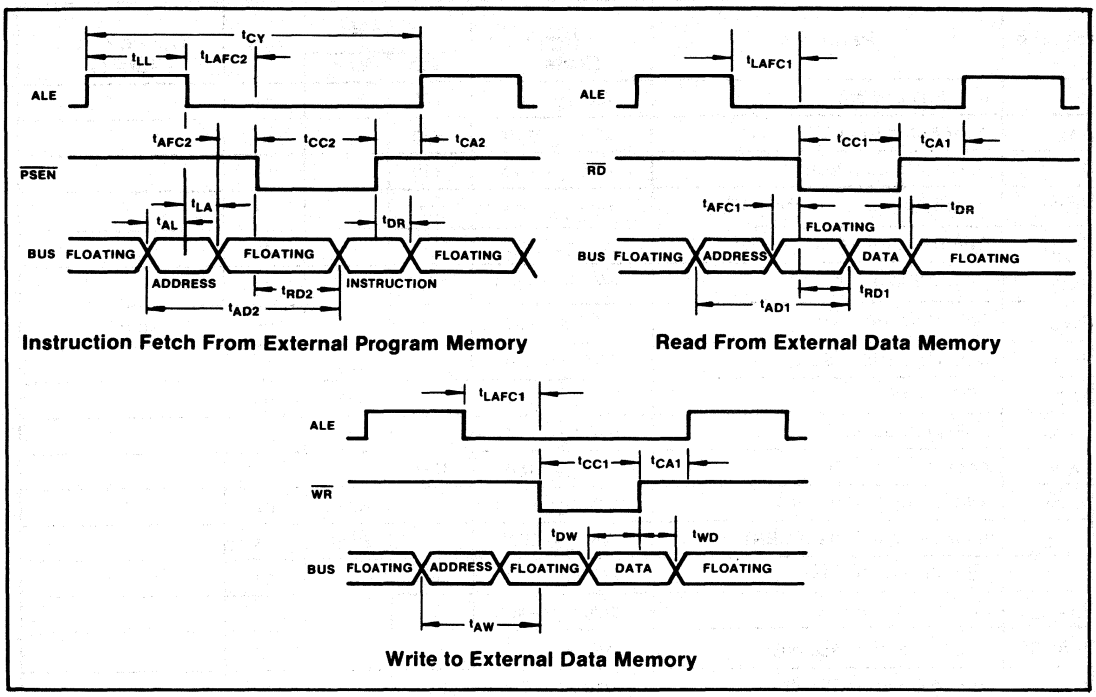

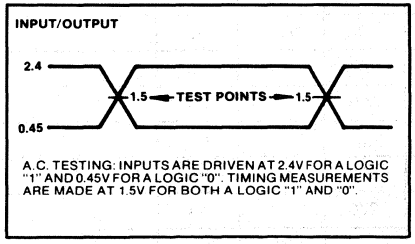

Figure 4. A.C. Testing Input, Output Waveform

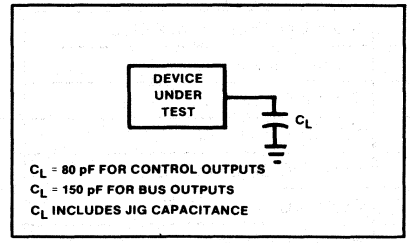

Figure 5. A.C. Testing Load Circuit

PORT 2 EXPANDER TIMING

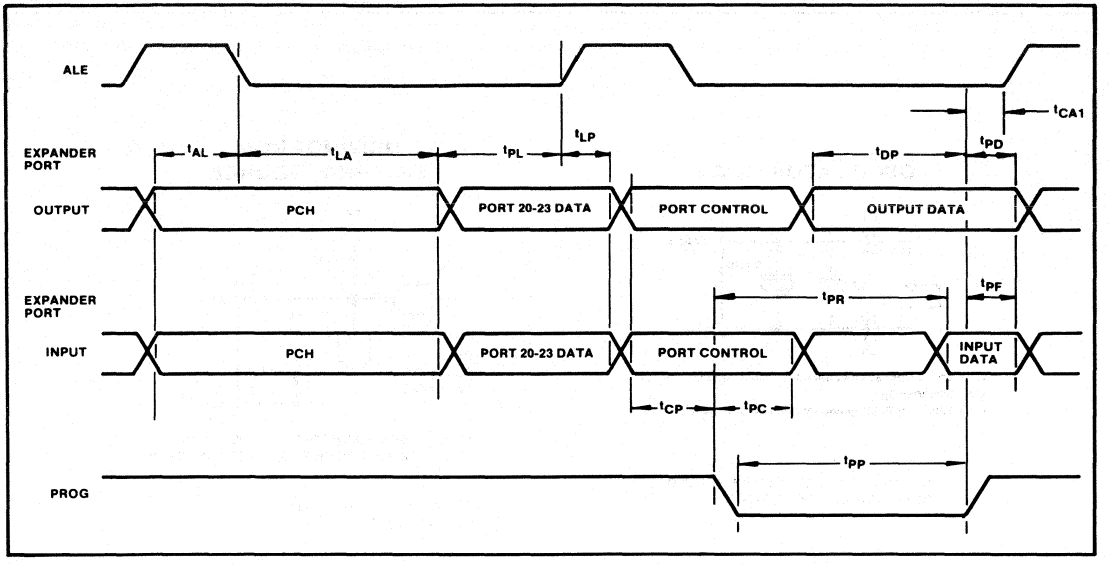

I/O PORT TIMING

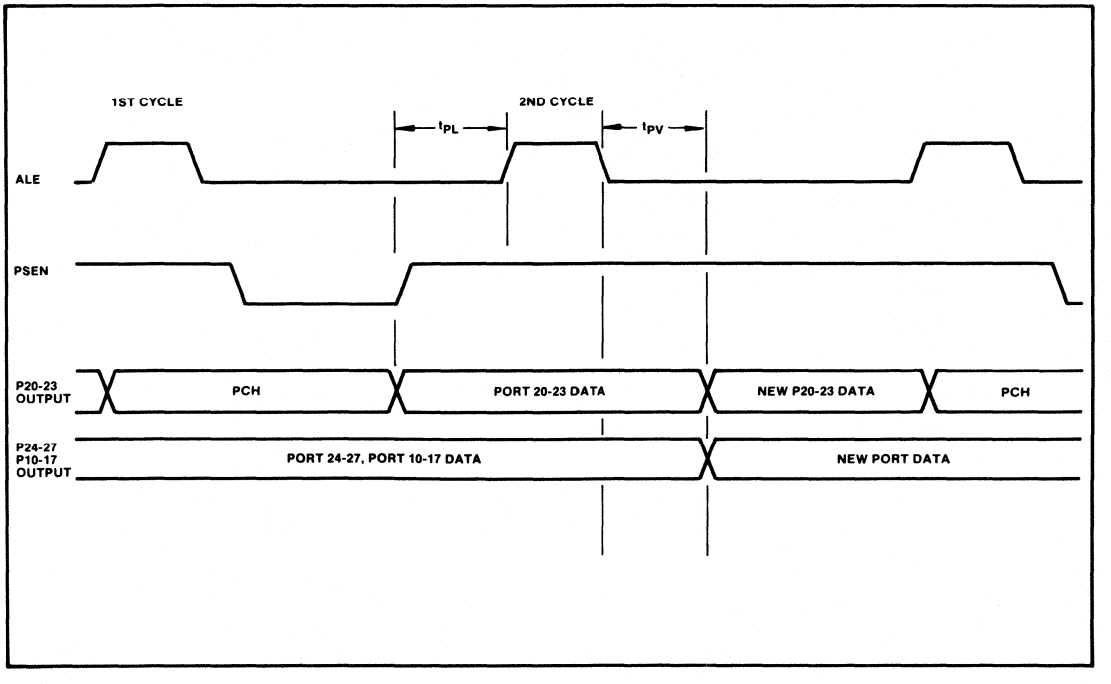

TYPICAL OSCILLATOR MODES

OSCILLATOR MODE

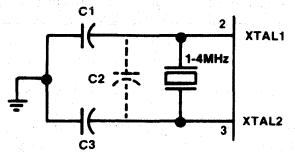

C1 = 5pF ± ½pF, stray capacitance must be less than 5pF
C2 = less than 8pF
C3 = 20pF ± 1pF, stray capacitance must be less than 5pF

CRYSTAL SERIES RESISTANCE SHOULD
BE LESS THAN 180 Ω AT 3.6MHz.

DRIVING FROM EXTERNAL SOURCE

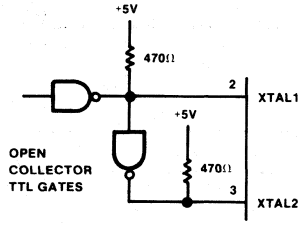

XTAL1 MUST BE HIGH 35-65% OF THE PERIOD,
AND XTAL2 MUST BE HIGH 35-65% OF THE PERIOD.

RISE AND FALL TIMES MUST
NOT EXCEED 20ns.

Intel Corporation Assumes No Responsibility for the Use of Any Other Circuitry Other Than Circuitry Embodied in an Intel Product. No Other Circuit Patent Licenses Are Implied.

PRELIMINARY

P80A48H/P80A35HL

HMOS SINGLE COMPONENT 8-BIT MICROCOMPUTER

Automotive

- **P80A48H—Mask Programmable ROM—8MHz**
- **P80A35HL—CPU Only with Power Down**

- **Extended Temperature Range of -40° C to +110° C in Low-Cost Plastic Package**
- **Reduced Power Consumption, High Performance HMOS**
- **Interval Timer/Event Counter**
- **1.88 μsec Cycle Time (8.0MHz)**
- **1K x 8 ROM**
  64 x 8 RAM
  27 I/O Lines
- **Two Single Level Interrupts**
- **Over 90 Instructions: 70% Single Byte**

Intel Corporation has recognized the need for high performance, single-chip, microcomputers that operate in the extended temperature and rigorous environment of an automobile. To meet this need, Intel has developed automotive grade products which feature extended operating temperature ranges in cost-effective plastic packages for selected microcomputers. These automotive grade products have been characterized and tested to provide an optimum balance between cost and performance over the standard automotive temperature range of -40° C to +110° C.

Intel's automotive grade products are fully compatible with the corresponding standard products with respect to architecture, instruction set, programming, and software portability.

All automotive grade products are supported by extensive reliability and quality qualification tests, in-process testing, and product monitor testing. This testing program has been designed to ensure that the automotive grade products comply with the rigorous reliability and quality requirements of the automotive industry.

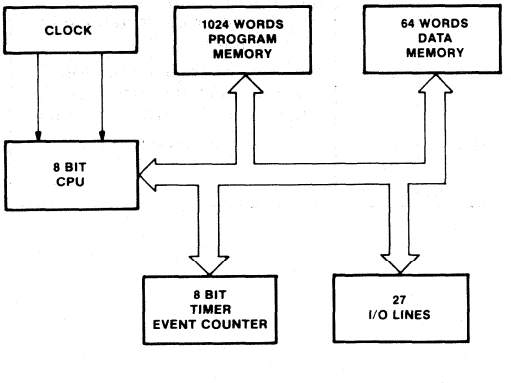

Figure 1.
Block Diagram

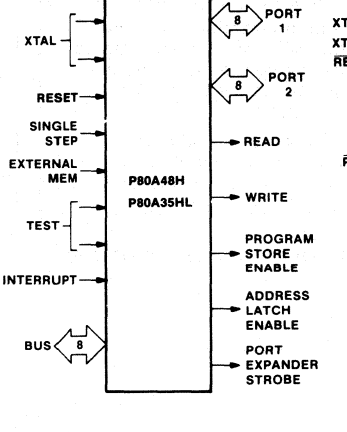

Figure 2.
Logic Symbol

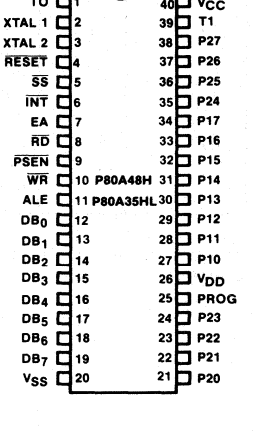

Figure 3. Pin Configuration (top view)

The following are trademarks of Intel Corporation and its affiliates and may be used only to identify Intel products: i, Intel, INTEL, INTELLEC, MCS, Im, iCS, ICE, UPI, BXP, iSBC, iSBX, Insite, iRMX, System 2000, CREDIT, iRMX/80, MULTIBUS, PROMPT, Promware, Megachassis, Library Manager, MAIN MULTIMODULE, and the combination of MCS, ICE, iSBC, iRMX or iCS and a numerical suffix. © INTEL CORPORATION, 1981.

AFN-01998A
AUGUST 1981

Table 1. Pin Description

Symbol	Pin No.	Function
V_{SS}	20	Circuit GND potential
V_{DD}	26	Low power standby pin
V_{CC}	40	Main power supply; +5V during operation.
PROG	25	Output strobe for 8243 I/O expander.
P10-P17 Port 1	27-34	8-bit quasi-bidirectional port.
P20-P27 Port 2	21-24 & 35-38	8-bit quasi-bidirectional port. P20-P23 contain the four high order program counter bits during an external program memory fetch and serve as a 4-bit I/O expander bus for 8243.
DB0-DB7 BUS	12-19	True bidirectional port which can be written or read synchronously using the $\overline{RD}$, $\overline{WR}$ strobes. The port can also be statically latched. Contains the 8 low order program counter bits during an external program memory fetch, and receives the addressed instruction under the control of $\overline{PSEN}$. Also contains the address and data during an external RAM data store instruction, under control of ALE, $\overline{RD}$, and $\overline{WR}$.
T0	1	Input pin testable using the conditional transfer instructions JT0 and JNT0. T0 can be designated as a clock output using ENT0 CLK instruction.
T1	39	Input pin testable using the JT1, and JNT1 instructions. Can be designated the timer/counter input using the STRT CNT instruction.
$\overline{INT}$	6	Interrupt input. Initiates an interrupt if interrupt is enabled. Interrupt is disabled after a reset.* Also testable with conditional jump instruction. (Active low)
$\overline{RD}$	8	Output strobe activated during a BUS read. Can be used to enable data onto the bus from an external device. Used as a read strobe to external data memory. (Active low)
$\overline{RESET}$	4	Input which is used to initialize the processor. (Active low) (Non TTL V_{IH})
$\overline{WR}$	10	Output strobe during a bus write. (Active low) Used as write strobe to external data memory.
ALE	11	Address latch enable. This signal occurs once during each cycle and is useful as a clock output. The negative edge of ALE strobes address into external data and program memory.
$\overline{PSEN}$	9	Program store enable. This output occurs only during a fetch to external program memory. (Active low)
$\overline{SS}$	5	Single step input can be used in conjunction with ALE to "single step" the processor through each instruction. (Active low)
EA	7	External access input which forces all program memory fetches to reference external memory. Useful for emulation and debug, and essential for testing and program verification. (Active high)
XTAL1	2	One side of crystal input for internal oscillator. Also input for external source. (Non TTL V_{IH})
XTAL2	3	Other side of crystal input.

*Interrupt pin must remain low for at least $3t_{CY}$ to ensure proper operation.

Table 2. Instruction Set

Accumulator

Mnemonic	Description	Bytes	Cycles
ADD A, R	Add register to A	1	1
ADD A, @R	Add data memory to A	1	1
ADD A, # data	Add immediate to A	2	2
ADDC A, R	Add register with carry	1	1
ADDC A, @R	Add data memory with carry	1	1
ADDC A, # data	Add immediate with carry	2	2
ANL A, R	And register to A	1	1
ANL A, @R	And data memory to A	1	1
ANL A, # data	And immediate to A	2	2
ORL A, R	Or register to A	1	1
ORL A @R	Or data memory to A	1	1
ORL A, # data	Or immediate to A	2	2
XRL A, R	Exclusive or register to A	1	1
XRL A, @R	Exclusive or data memory to A	1	1
XRL, A, # data	Exclusive or immediate to A	2	2
INC A	Increment A	1	1
DEC A	Decrement A	1	1
CLR A	Clear A	1	1
CPL A	Complement A	1	1
DA A	Decimal adjust A	1	1
SWAP A	Swap nibbles of A	1	1
RL A	Rotate A left	1	1
RLC A	Rotate A left through carry	1	1
RR A	Rotate A right	1	1
RRC A	Rotate A right through carry	1	1

Input/Output

Mnemonic	Description	Bytes	Cycles
IN A, P	Input port to A	1	2
OUTL P, A	Output A to port	1	2
ANL P, # data	And immediate to port	2	2
ORL P, # data	Or immediate to port	2	2
INS A, BUS	Input BUS to A	1	2
OUTL BUS, A	Output A to BUS	1	2
ANL BUS, # data	And immediate to BUS	2	2
ORL BUS, # data	Or immediate to BUS	2	2
MOVD A,P	Input expander port to A	1	2
MOVD P, A	Output A to expander port	1	2
ANLD P, A	And A to expander port	1	2
ORLD P, A	Or A to expander port	1	2

Registers

Mnemonic	Description	Bytes	Cycles
INC R	Increment register	1	1
INC @R	Increment data memory	1	1
DEC R	Decrement register	1	1

Branch

Mnemonic	Description	Bytes	Cycles
JMP addr	Jump unconditional	2	2
JMPP @A	Jump indirect	1	2
DJNZ R, addr	Decrement register and skip	2	2
JC addr	Jump on carry = 1	2	2
JNC addr	Jump on carry = 0	2	2
JZ addr	Jump on A zero	2	2
JNZ addr	Jump on A not zero	2	2
JTO addr	Jump on TO = 1	2	2
JNTO addr	Jump on TO = 0	2	2
JT1 addr	Jump on T1 = 1	2	2
JNT1 addr	Jump on T1 = 0	2	2
JF0 addr	Jump on F0 = 1	2	2
JF1 addr	Jump on F1 = 1	2	2
JTF addr	Jump on timer flag	2	2
JN1 addr	Jump on INT = 0	2	2
JBb addr	Jump on accumulator bit	2	2

Subroutine

Mnemonic	Description	Bytes	Cycles
CALL addr	Jump to subroutine	2	2
RETR	Return	1	2
RETR	Return and restore status	1	2

Flags

Mnemonic	Description	Bytes	Cycles
CLR C	Clear carry	1	1
CPL C	Complement carry	1	1
CLR F0	CLear flag 0	1	1
CPL F0	Complement flag 0	1	1
CLR F1	Clear flag 1	1	1
CPL F1	Complement flag 1	1	1

Data Moves

Mnemonic	Description	Bytes	Cycles
MOV A, R	Move register to A	1	1
MOV A, @R	Move data memory to A	1	1
MOV A, # data	Move immediate to A	2	2
MOV R, A	Move A to register	1	1
MOV @R, A	Move A to data memory	1	1
MOV R, # data	Move immediate to register	2	2
MOV @R, #data	Move immediate to data memory	2	2
MOV A, PSW	Move PSW to A	1	1
MOV PSW, A	Move A to PSW	1	1
XCH A, R	Exchange A and register	1	1
XCH A, @R	Exchange A and data memory	1	1
XCHD A, @R	Exchange nibble of A and register	1	
MOVX A, @R	Move external data memory to A	1	2
MOVX @R, A	Move A to external data memory	1	2
MOVP A, @A	Move to A from current page	1	2
MOVP3 A, @	Move to A from page 3	1	2

Timer/Counter

Mnemonic	Description	Bytes	Cycles
MOV A, T	Read timer/counter	1	1
MOV T, A	Load timer/counter	1	1
STRT T	Start timer	1	1
STRT CNT	Start counter	1	1
STOP TCNT	Stop timer/counter	1	1
EN TCNT1	Enable timer/counter interrupt	1	1
DIS TCNT1	Disable timer/counter interrupt	1	1

Control

Mnemonic	Description	Bytes	Cycles
EN 1	Enable external interrupt	1	1
DIS 1	Disable external interrupt	1	1
SEL RB0	Select register bank 0	1	1
SEL RB1	Select register bank 1	1	1
SEL MB0	Select memory bank 0	1	1
SEL MB1	Select memory bank 1	1	1
ENT0 CLK	Enable clock output on T0	1	1

Mnemonic	Description	Bytes	Cycles
NOP	No operation	1	1

ABSOLUTE MAXIMUM RATINGS*

Ambient Temperature Under Bias ... -40°C to +110°C
Storage Temperature ..... -65°C to +150°C
Voltage on Any Pin with Respect to Ground ..... -0.5V to +7V
Power Dissipation ..... 1.5 Watt

** NOTICE: Stresses above those listed under "Absolute Maximum Ratings" may cause permanent damage to the device. This is a stress rating only and functional operation of device at these or any other conditions above those indicated in the operational sections of this specification is not implied. Exposure to absolute maximum rating conditions for extended periods may affect device reliability.*

D.C. CHARACTERISTICS (T_A = -40°C to +110°C, V_{CC} = V_{DD} = 5V ± 10%, V_{SS} = 0V)

Symbol	Parameter	80A48H 80A35HL			Unit	Test Conditions
		Min	Typ*	Max		
V_{IL}	Input Low Voltage (All Except $\overline{RESET}$, X1, X2)	-.5		.7	V	
V_{IL1}	Input Low Voltage ($\overline{RESET}$, X1, X2)	-.5		.6	V	
V_{IH}	Input High Voltage (All Except XTAL1, XTAL2, $\overline{RESET}$)	2.2		V_{CC}	V	
V_{IH1}	Input High Voltage (X1, X2, $\overline{RESET}$)	3.8		V_{CC}	V	
V_{OL}	Output Low Voltage (BUS)			.45	V	I_{OL} = 2.0 mA
V_{OL1}	Output Low Voltage ($\overline{RD}$, $\overline{WR}$, $\overline{PSEN}$, ALE)			.45	V	I_{OL}= 1.8 mA
V_{OL2}	Output Low Voltage (PROG)			.45	V	I_{OL} = 0.8 mA
V_{OL3}	Output Low Voltage (All Other Outputs)			.45	V	I_{OL} = 1.6 mA
V_{OH}	Output High Voltage (BUS)	2.4			V	I_{OH} = -400 μA
V_{OH1}	Output High Voltage ($\overline{RD}$, $\overline{WR}$, $\overline{PSEN}$, ALE)	2.4			V	I_{OH} = -100 μA
V_{OH2}	Output High Voltage (All Other Outputs)	2.4			V	I_{OH} = -30 μA
I_{L1}	Input Leakage Current (T1, $\overline{INT}$)			± 10	μA	$V_{SS} \leq V_{IN} \leq V_{CC}$
I_{LI1}	Input Leakage Current (P10-P17, P20-P27, EA, $\overline{SS}$)			-600	μA	V_{SS} + .45 $\leq V_{IN} \leq V_{CC}$
I_{LO}	Output Leakage Current (BUS,T0) (High Impedance State)			± 10	μA	V_{SS} + .45 $\leq V_{IN} \leq V_{CC}$
I_{DD}	V_{DD} Supply Current (power down)		4 6	8 12	mA	T_A = +25°C Full Temp. Range
I_{DD} + I_{CC}	Total Supply Current		40 50	75 95	mA	T_A = 25°C Full Temp. Range
V_{DD}	RAM Standby PIN Voltage	3.0		5.5	V	Standby Mode, Reset $\leq$ 0.6V

*Typical = typical unit with V_{CC}, V_{DD} = +5.0V, T_A = +25°C

A.C. CHARACTERISTICS (T_A = -40°C to +110°C, V_{CC} = V_{DD} = 5V ± 10%, V_{SS} = 0V)

Symbol	Parameter	f (t_{CY}) (Note 3)	P80A48H P80A35HL		Unit	Conditions (Note 1)
			Min	Max		
t_{LL}	ALE Pulse Width	7/30 t_{CY} -170	260		ns	
t_{AL}	Addr Setup to ALE	1/5 t_{CY} -110	260		ns	
t_{LA}	Addr Hold from ALE	1/15 t_{CY} -40	80		ns	
t_{CC1}	Control Pulse Width ($\overline{RD}$, $\overline{WR}$)	1/2 t_{CY} -200	740		ns	
t_{CC2}	Control Pulse Width ($\overline{PSEN}$)	2/5 t_{CY} -200	550		ns	
t_{DW}	Data Setup before $\overline{WR}$	13/30 t_{CY} -200	610		ns	
t_{WD}	Data Hold after $\overline{WR}$	1/15 t_{CY} -50	70		ns	(Note 2)
t_{DR}	Data Hold ($\overline{RD}$, $\overline{PSEN}$)	1/10 t_{CY} -30	0	160	ns	
t_{RD1}	$\overline{RD}$ to Data in	2/5 t_{CY} -200		550	ns	
t_{RD2}	$\overline{PSEN}$ to Data in	3/10 t_{CY} -200		360	ns	
t_{AW}	Addr Setup to $\overline{WR}$	2/5 t_{CY} -150	600		ns	
t_{AD1}	Addr Setup to Data ($\overline{RD}$)	23/30 t_{CY} -250		1190	ns	
t_{AD2}	Addr Setup to Data ($\overline{PSEN}$)	3/5 t_{CY}-250		870	ns	
t_{AFC1}	Addr Float to $\overline{RD}$, $\overline{WR}$	2/15 t_{CY} -40	210		ns	
t_{AFC2}	Addr Float to $\overline{PSEN}$	1/30 t_{CY} -40	20		ns	
t_{LAFC1}	ALE to Control ($\overline{RD}$, $\overline{WR}$)	1/5 t_{CY} -75	300		ns	
t_{LAFC2}	ALE to Control ($\overline{PSEN}$)	1/10 t_{CY} -75	110		ns	
t_{CA1}	Control to ALE ($\overline{RD}$, $\overline{WR}$, $\overline{PROG}$)	1/15 t_{CY} -40	80		ns	
t_{CA2}	Control to ALE ($\overline{PSEN}$)	4/15 t_{CY} -40	460		ns	
t_{CP}	Port Control Setup to $\overline{PROG}$	2/15 t_{CY} -80	170		ns	
t_{PC}	Port Control Hold to $\overline{PROG}$	4/15 t_{CY} -200	300		ns	
t_{PR}	$\overline{PROG}$ to P2 Input Valid	6/10 t_{CY} -120		1000	ns	
t_{PF}	Input Data Hold from $\overline{PROG}$	1/10 t_{CY}	0	190	ns	
t_{DP}	Output Data Setup	2/5 t_{CY} -150	600		ns	
t_{PD}	Output Data Hold	1/10 t_{CY} -50	140		ns	
t_{PP}	$\overline{PROG}$ Pulse Width	7/10 t_{CY} -250	1060		ns	
t_{PL}	Port 2 I/O Setup to ALE	4/15 t_{CY} -200	300		ns	
t_{LP}	Port 2 I/O Hold to ALE	1/10 t_{CY} -100	90		ns	
t_{PV}	Port Output from ALE	3/10 t_{CY} +100		660	ns	
t_{CY}	Cycle Time	(1/f_{XTAL}) x 15	1.88		μs	(Note 4)
t_{0PRR}	T0 Rep Rate	3/15 t_{CY}	370		ns	

Notes:

1. Control Outputs C_L = 80 pF
   BUS Outputs C_L = 150 pF
2. BUS High Impedance Load 20 pF
3. Equation to calculate theoretical AC timing parameters at frequency of choice. Calculated values will be equal to or better than published values. Equation assumes 50% duty cycle on X1, X2.
4. Maximum t_{CY} = 15.0 μs (1.0MHz).

WAVEFORMS

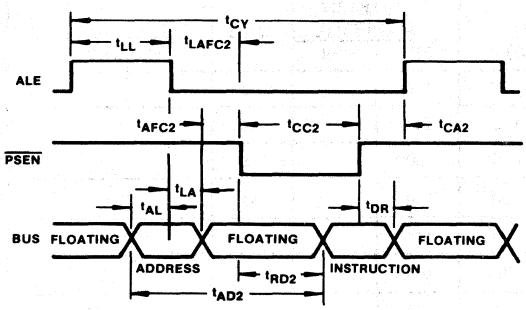

Instruction Fetch From External Program Memory

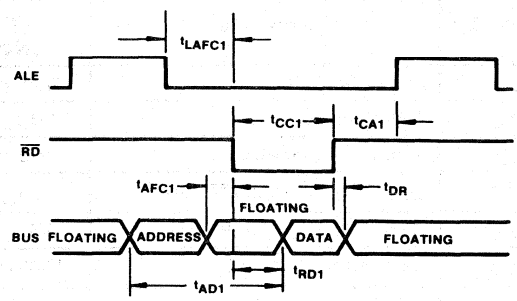

Read From External Data Memory

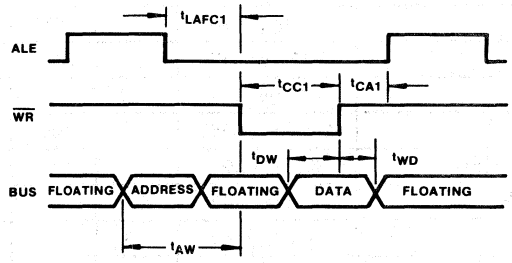

Write to External Data Memory

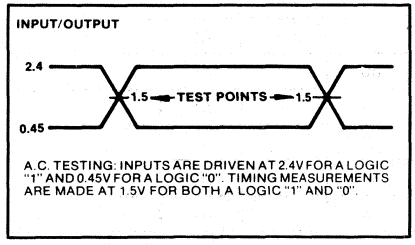

Figure 4. A.C. Testing Input, Output Waveform

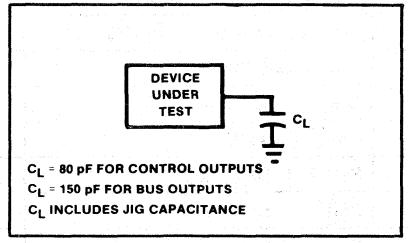

Figure 5. A.C. Testing Load Circuit

PORT 2 EXPANDER TIMING

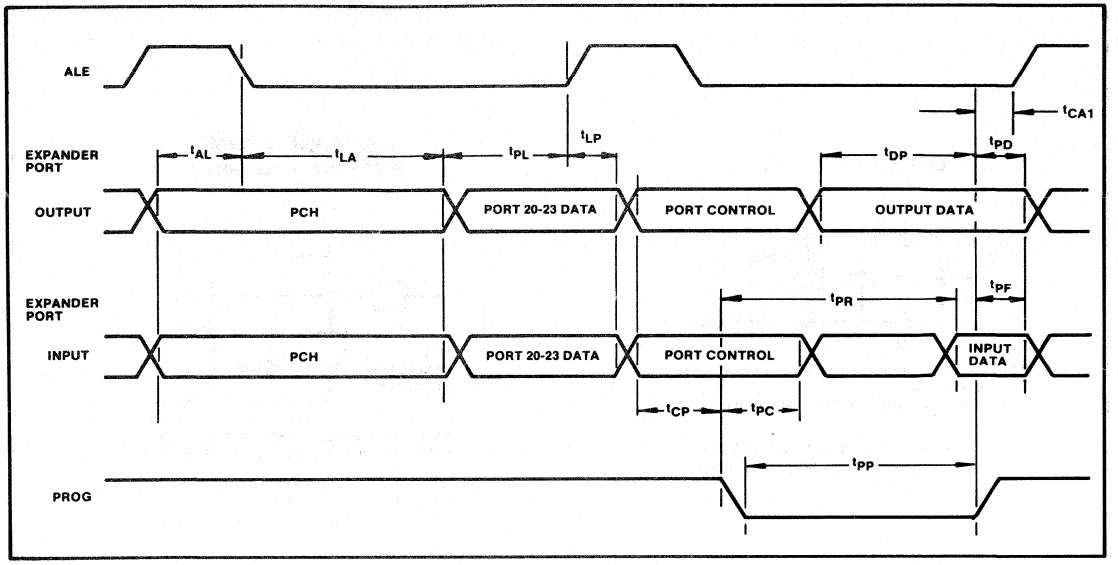

I/O PORT TIMING

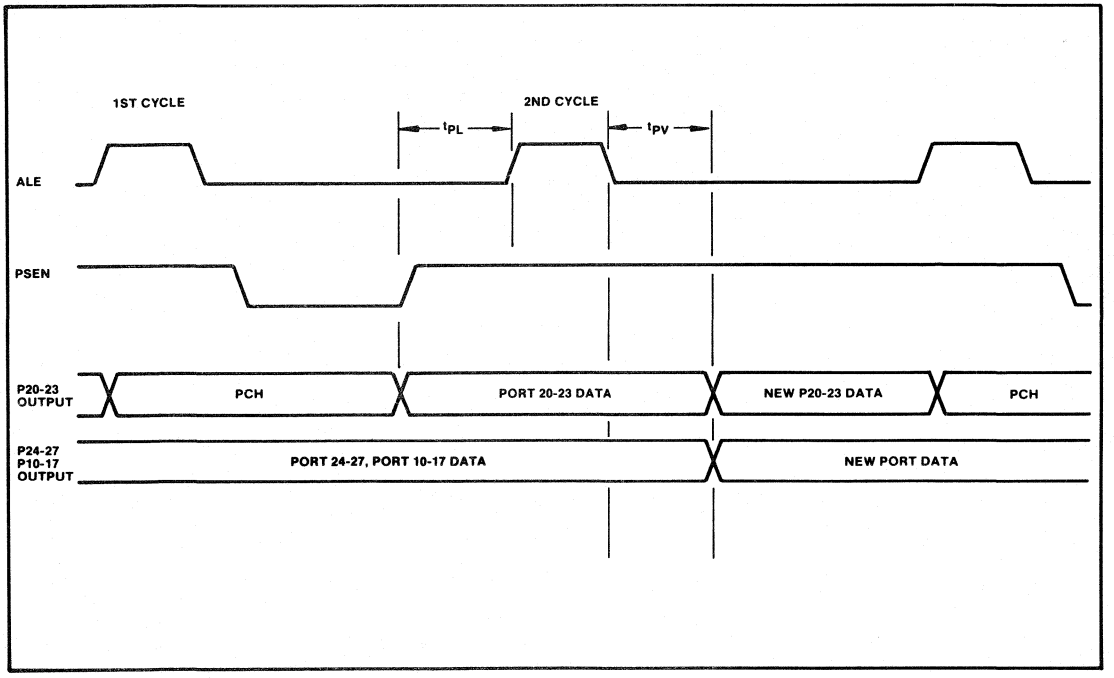

TYPICAL OSCILLATOR MODES

OSCILLATOR MODE

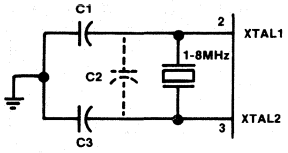

C1 = 5pF ± ½pF, stray capacitance must be less than 5pF
C2 = less than 8pF
C3 = 20pF ± 1pF, stray capacitance must be less than 5pF

CRYSTAL SERIES RESISTANCE SHOULD BE LESS THAN 75 Ω AT 8MHz; LESS THAN 180 Ω AT 3.6MHz.

DRIVING FROM EXTERNAL SOURCE

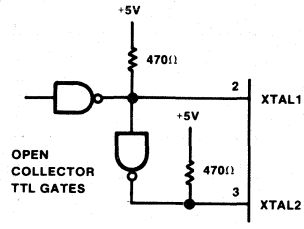

XTAL1 MUST BE HIGH 35-65% OF THE PERIOD, AND XTAL2 MUST BE HIGH 35-65% OF THE PERIOD.

RISE AND FALL TIMES MUST NOT EXCEED 20ns.

Intel Corporation Assumes No Responsibility for the Use of Any Other Circuitry Other Than Circuitry Embodied in an Intel Product. No Other Circuit Patent Licenses Are Implied.

MCS-48™ Microprocessors

6

8020H

HMOS SINGLE-COMPONENT 8-BIT MICROCOMPUTER

- **8-bit CPU, ROM, RAM, I/O in Single 20-pin Package**
- **Single +5V Supply (+4.5V to 6.5V)**
- **8.38 μsec Cycle with 3.58 MHz XTAL. All instructions 1 or 2 cycles.**
- **Instructions—8048 Subset**
- **1K x 8 ROM**
  64 x 8 RAM
  13 I/O Lines
- **Internal Timer/Counter**
- **30mA Operation @ 25° C**

The Intel® 8020H is a cost-effective single-chip microcomputer for high volume, cost-sensitive applications such as home entertainment products, appliances and simple control jobs. The 8020H is an 8-bit computer fabricated on a single silicon chip using Intel's advanced N-channel silicon gate HMOS process.

The 8020H key features include a subset of the industry standard 8048's instruction set optimized for the consumer an appliance marketplaces. Some of these features are a 1K × 8 program memory, a 64 × 8 data memory, 13 I/O lines and an 8-bit timer/counter in addition to on-board oscillator and clock circuits. The 20-pin package provides board real estate savings.

A specific requirement in many of these market-type applications is the need for more I/O. The 8020H has instructions and hardware on-board to interface to TTL I/O expansion packages.

To make efficient use of the program memory size, the 8020H has an instruction set optimized for byte efficiency and control. No instructions are longer than 2 bytes, with 70% of the instructions at 1 byte. For control-oriented applications, arithmetic instructions are supported using binary and BCD operands.

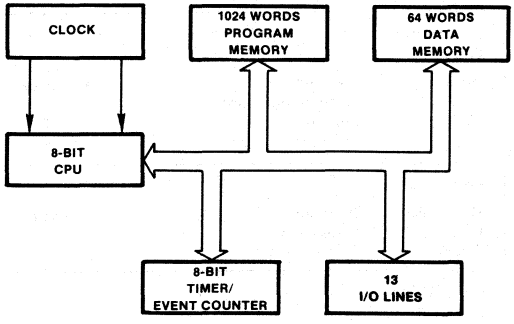

Figure 1. Block Diagram

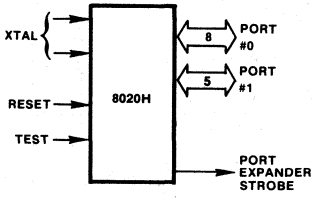

Figure 2. Logic Symbol

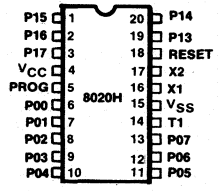

Figure 3. Pin Configuration

Intel Corporation Assumes No Responsibility for the Use of Any Circuitry Other Than Circuitry Embodied in an Intel Product. No Other Circuit Patent Licenses Are Implied.
© INTEL CORPORATION, 1981

Table 1. Pin Description

Symbol	Pin No.	Function
V_{SS}	15	Circuit GND potential
V_{CC}	4	+5V power supply
PROG	5	Output strobe for TTL I/O expansion
P00–P07 Port 0	6–13	8-bit quasi-bidirectional port
P3–P17 Port 1	19–20 1–3	5-bit quasi-bidirectional port
T1	14	Input pin testable using the JT1 and JNT1 instructions. Can be designated the timer/event counter input using the STRT CNT instruction. Also allows zero-crossover sensing of slowly moving AC inputs
RESET	18	Input used to initialize the processor by clearing status flip-flops and setting program counters to zero.
XTAL1	16	One side of crystal or inductor input for internal oscillator. Also input for external source. (Not TTL compatible.)
XTAL2	17	Other side of timing control element.

Table 2. Instruction Set

Accumulator

Mnemonic	Description	Bytes	Cycles
ADD A, R	Add register to A	1	1
ADD A, @R	Add data memory to A	1	1
ADD A, # data	Add immediate to A	2	2
ADDC A, R	Add with carry	1	1
ADDC A, @R	Add with carry	1	1
ADDC A, # data	Add with carry	2	2
ANL A, R	And register to A	1	1
ANL A, @R	And data memory to A	1	1
ANL A, # data	And immediate to A	2	2
ORL A, R	Or register to A	1	1
ORL A, @R	Or data memory to A	1	1
ORL A, # data	Or immediate to A	2	2
XRL A, R	Exclusive or register to A	1	1
XRL A, @R	Exclusive or data memory to A	1	1
XRL A, # data	Exclusive or immediate to A	2	2
INC A	Increment A	1	1
DEC A	Decrement A	1	1
CLR A	Clear A	1	1
CPL A	Complement A	1	1
DA A	Decimal Adjust A	1	1
SWAP A	Swap nibles of A	1	1
RL A	Rotate A left	1	1
RLC A	Rotate A left through carry	1	1
RR A	Rotate A right	1	1
RRC A	Rotate A right through carry	1	1

Input/Output

Mnemonic	Description	Bytes	Cycles
IN A, P	Input port to A	1	2
OUTL P, A	Output A to port	1	2

Registers

Mnemonic	Description	Bytes	Cycles
INC R	Increment register	1	1
INC @R	Increment data memory	1	1

Branch

Mnemonic	Description	Bytes	Cycles
JMP addr	Jump unconditional	2	2
JMPP @A	Jump indirect	1	2
DJNZ R, addr	Decrement register and Jump on R not zero	2	2
JC addr	Jump on Carry = 1	2	2
JNC addr	Jump on Carry = 0	2	2
JZ addr	Jump on A Zero	2	2
JNZ addr	Jump on A not Zero	2	2
JT1 addr	Jump on T1 = 1	2	2
JNT1 addr	Jump on T1 = 0	2	2
JTF addr	Jump on timer flag	2	2

Subroutine

Mnemonic	Description	Bytes	Cycles
CALL	Jump to subroutine	2	2
RET	Return	1	2

Flags

Mnemonics	Description	Bytes	Cycles
CLR C	Clear Carry	1	1
CPL C	Complement Carry	1	1

AFN-01935A-2

Table 2. Instruction Set Summary (cont.)

Data Moves

Mnemonics	Description	Bytes	Cycles
MOV A, R	Move register to A	1	1
MOV A, @R	Move data memory to A	1	1
MOV A, # data	Move immediate to A	2	2
MOV R, A	Move A to register	1	1
MOV @R, A	Move A to data memory	1	1
MOV R, # data	Move immediate to register	2	2
MOV @R, # data	Move immediate to data memory	2	2
XCH A, R	Exchange A and register	1	1
XCH A, @R	Exchange A and data memory	1	1
XCHD A, @R	Exchange nibble of A and register	1	1
MOVP A, @A	Move to A from current page	1	2

Timer/Counter

Mnemonic	Description	Bytes	Cycles
MOV A, T	Read Timer/Counter	1	1
MOV T, A	Load Timer/Counter	1	1
STRT T	Start Timer	1	1
STRT CNT	Start Counter	1	1
STOP TCNT	Stop Timer/Counter	1	1

Mnemonics	Description	Bytes	Cycles
NOP	No Operation	1	1

ABSOLUTE MAXIMUM RATINGS*

Ambient Temperature Under Bias ..... 0° C to 70° C
Storage Temperature ..... -65° C to +150° C
Voltage on Any Pin with Respect to Ground ..... -0.5V to +7V
Power Dissipation 1W

**NOTICE: Stresses above those listed under "Absolute Maximum Ratings" may cause permanent damage to the device. This is a stress rating only and functional operation of the device at these or any other conditions above those indicated in the operational sections of this specification is not implied. Exposure to absolute maximum rating conditions for extended periods may affect device reliability.*

D.C. CHARACTERISTICS (T_A = 0° C to 70° C, V_{CC} = 5.5V ± 1V, V_{SS} = 0V)

Symbol	Parameter	Limits			Unit	Test Conditions
		Min	Typ	Max		
V_{IL}	Input Low Voltage	-0.5		0.8	V	
V_{IH}	Input High Voltage (All except XTAL 1 & 2, T1, RESET)	3.0		V_{CC}	V	
V_{IH1}	Input High Voltage (XTAL 1 & 2, T1, RESET)	3.8		V_{CC}	V	
$V_{IH(10\%)}$	Input High Voltage (All except XTAL 1 & 2, T1, RESET)	2.0		V_{CC}	V	V_{CC} = 5.0V ± 10%
$V_{IH1(10\%)}$	Input High Voltage (XTAL 1 & 2, T1, RESET)	3.5		V_{CC}	V	V_{CC} = 5.0V ± 10%
V_{OL}	Output Low Voltage			0.45	V	I_{OL} + 1.6 mA
V_{OH}	Output High Voltage (All unless Open Drain)	2.4			V	I_{OH} = 40 μA
I_{LO}	Output Leakage Current (Open Drain Option—Port 0)			±10	μA	V_{SS} + 0.45 ≤ V_{IN} ≤ V_{CC}
I_{CC}	V_{CC} Supply Current		30	60	mA	

T1 ZERO CROSS CHARACTERISTICS (T_A = 0° C to 70° C, V_{CC} = 5.5V ± 1V, V_{SS} = 0V, C_L = 80 pF)

Symbol	Parameter	Min	Max	Unit	Test Conditions
V_{ZX}	Zero-Cross Detection Input (T1)	1	3	V_{PP}	AC Coupled, C = .2μF
A_{ZX}	Zero-Cross Accuracy		±135	mV	60 Hz Sine Wave
F_{ZX}	Zero-Cross Detection Input Frequency (T1)	0.05	1	kHz	
t_{CY}	Cycle Time	8.38	50.0		3.58 MHz XTAL = 8.38 μs t_{CY}

AFN-01935A-3

8020H FUNCTIONAL SPECIFICATIONS

The following is a functional description of the major elements of the 8020H.

Program Memory

The 8020H contains 1K x 8 of mask programmable ROM. No external ROM expansion capability is provided.

Data Memory

A 64 x 8 dynamic RAM is located on chip for data storage. All locations are indirectly addressable and eight designated locations are directly addressable. Also, included in the memory is the address stack, addressed by a 3-bit stack pointer.

Memory is organized as shown in Figure 4. The least significant 8 addresses, 0–7, are directly addressable by any of the 11 direct register instructions. The locations are readily accessible for a variety of operations with the least number of instruction bytes required for their manipulation.

Registers 0 and 1 have another function, in that they can be used to indirectly address all locations in memory, using the indirect register instructions. These indirect RAM address registers, IRAR's, are especially useful for repetitive-type operations on adjacent memory locations. The indirect register instruction specifies which IRAR to use, and the contents of the IRAR is used to address a location in RAM. The contents of the addressed location is used during the execution of the instruction and may be modified. A value larger than 63 should not be preset in the IRAR when selected by an indirect register instruction. IRAR's may point to addresses 0–7, if desired.

Locations 8–23 may be used as the address stack. The address stack enables the processor to keep track of the return addresses generated from CALL instructions. A 3-bit stack pointer (SP) supplies the address of the locations to be loaded with the next return address generated. The SP to this pushdown stack is incremented by one after a return address is stored, and decremented by one before an address is fetched during a RET. The unincremented program counter address is stored in the address stack. The stack contents is incremented before being loaded into the program counter during a return from subroutine. A total of 8 levels of nesting is possible. The SP is initialized to location 8 upon RESET. Since each address is 10-bits long, two bytes must be used to store a single address. The SP is incremented and decremented by one, but each increment or decrement moves the address pointed to by two. Therefore, only even numbered addreses are pointed to.

If a particular application does not require 8 levels of nesting, the unused portion of the stack may be used as any other indirectly addressable stratchpad location. For example, if only 3 levels of subroutine nesting are used, then only locations 8–13 need be reserved for the address stack, and locations 14–63 can be used for data storage.

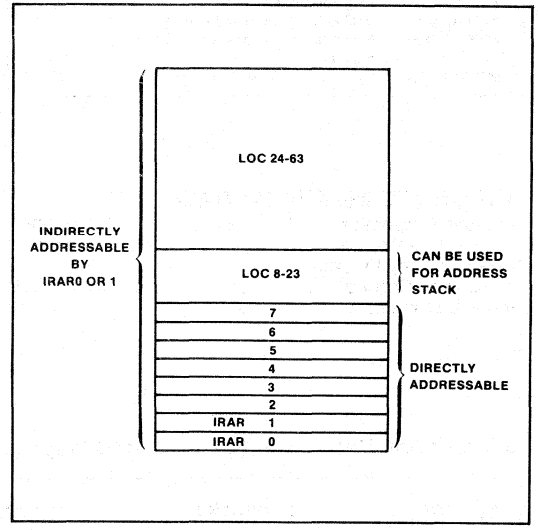

Figure 4. Internal RAM Organization.

Oscillator and Clock

The 8020H contains its own onboard oscillator and clock circuit, requiring only an external timing control element. This control element can be a crystal, inductor, or clock in. The capacitor normally required in inductor timing control operation is integrated onto the 8020H. All internal time slots are derived from the external element, and all outputs are a function of the oscillator frequency. Pins XTAL1 and XTAL2 are used to input the particular control element. An instruction cycle consists of 10 states, and each state is a time slot of 3 oscillator periods. (See Figure 5.) Therefore, to obtain a 10 μsec instruction cycle, a 3 MHz crystal should be used. An oscillator frequency of approximately 3 MHz may also be obtained by connecting a 470 μH inductor between XTAL1 and XTAL2. Note that the required inductance may vary and should be adjusted as necessary.

The 8020H utilizes dynamic RAM and certain other dynamic logic. Due to the clocking required with dynamic circuits, the oscillator frequency must be equal to or greater than 600K Hz, or improper operation may occur.

AFN-01935A-4

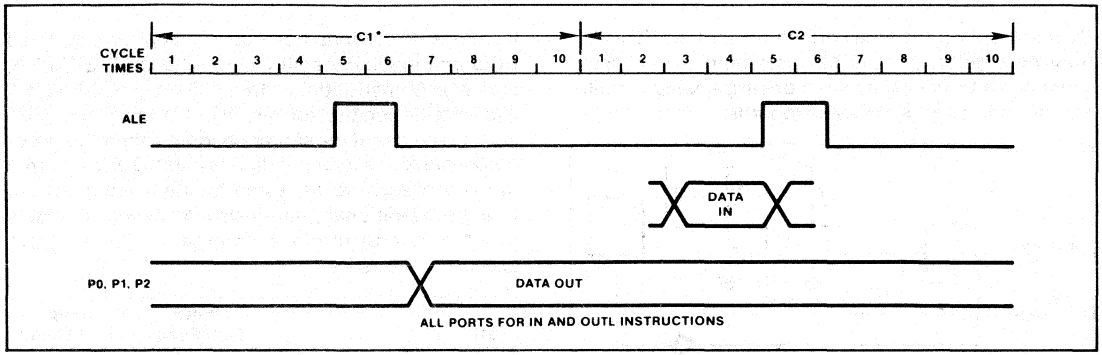

Figure 5. 8020H Timing Diagram

Timer/Event Counter

The 8020H has internal timer/event counter circuits that can monitor elapsed time or count external events that occur during program execution. The circuit has an 8-bit binary up-counter that is presettable and readable with two MOV instructions. These instructions transfer the contents of the accumulator to the counter and vice versa. The counter content is not affected by Reset, and is initialized solely by the MOV T,A instruction. The counter is stopped by a RESET or STOP TCNT instruction and remains stopped until started as a timer by a STRT T instruction or as an event counter by a STRT CNT instruction. Once started, the counter increments to its maximum count (FF), and overflows to zero. The count continues until stopped by a STOP TCNT instruction or RESET. The increment from maximum count to zero (overflow) sets an overflow flag. The state of the overflow flag is testable with the conditional jump instruction JTF. The flag is reset by JTF but not by executing a RESET, unlike the 8748.

By a MOV T,A instruction, the contents of the accumulator are loaded to the timer. At the STRT T command an internal prescaler is zeroed and thereafter increments once each 30 input clocks (once each single cycle instruction, twice each double cycle instruction). The prescaler is a divide by 32. At the (11111) to (00000) transition the timer is incremented. The timer is 8-bits and an overflow (FFH) to (00H) timer flag is set. A conditional branch instruction (JTF) is available for testing this flag, the flag being reset each test. Total count capacity for the timer is $2^8 \times 2^5 = 8192$ or 81.9 msec at a 10 μsec cycle time. Contents of the timer are moved to the accumulator by the MOV A,T instruction without disturbing the counting process. The timer stops upon the STOP TCNT instruction.

The STRT CNT instruction connects the T1 input pin to the event counter input and enables the counter. Subsequent high-to-low transitions on T1 increment the counter. The maximum rate at which the counter can increment is once per three instruction cycles (30μs for a 3 MHz oscillator). There is no minimum frequency. T1 input must remain high for at least 500ns after each transition. The event counter is stopped by a STOP TCNT instruction.

Input/Output Capabilities

The 8020H I/O configurations are highly flexible. A number of different configurations are possible, tailoring an 8020H to a given task. Other than the power supply and dedicated pins, all other pins (13) can be used for input, output, or both, depending on the configuration.

All ports are quasi-bidirectional to facilitate standalone use. A simplified schematic of the quasi-bidirectional interface is shown in Figure 6. This configuration allows buffered outputs, and also allows external input. Data written to these ports is statically latched and remains unchanged until rewritten. As input ports these lines are non-latching, i.e., inputs must be present until read by an input instruction. When writing a "0" or low value to these ports, the large pulldown device sinks an external TTL load. When writing a "1", a large current is supplied through the large pullup device to allow a fast data transfer. After a short time (less than one instruction cycle), the large device is shut off and the small pullup maintains the "1" level indefinitely. However, in this situation, an input device capable of overriding the small amount of sustaining current supplied by the pullup device can be read. (Alternatively, the data written can be read.) So, by writing a "1" to any particular pin, that pin can serve either as a true high-level latched output pin, or as just a pullup resistor on an input. This allows maximum user flexibility in selecting his input or latched output pins, with a minimum of external components.

Port 00-07 is also quasi-bidirectional, except there is no large pullup device. As outputs, this port is essentially open drain.

AFN-01935A-5

By mask option the small pullup devices on P00–P07 may be deleted on any pin providing a true open drain output. This is useful in driving analog circuits and certain loads, such as keyboards.

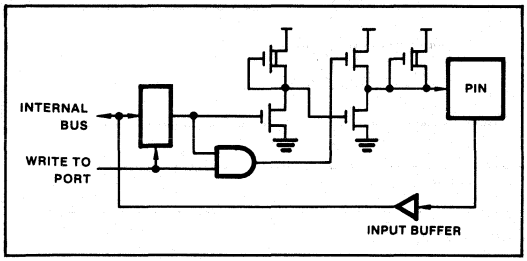

Figure 6. Quasi-Bidirectional Port Structure

T1 Input

The 8020H T1 input line can be used as an input for the following functions:

- Event Counter (external input)
- Test input for branch instructions
- Zero voltage crossing detection

The operation of T1 as an input to the Event Counter is described in the Timer/Event Counter section. When used as a test input, the JT1 and JNT1 instructions test for 1 and 0 levels, respectively.

The T1 pin can also be used to detect the zero crossing of slowly moving AC signals (60 Hz). The self-biasing circuit shown in Figure 7 permits the Test 1 input to detect when the input voltage crosses zero within ±5%; the voltage is then coupled through a 1.0μf capacitor. Maximum input voltage is 3V peak-to-peak. The zero cross detection is especially useful in SCR control of 60 Hz power and in developing time-of-day and other timing routines. As a ROM mask option there is a pullup resistor that is useful for switch contact input or standard TTL.

The 8020H can use standard low cost TTL to expand the number of I/O lines.

CPU

The 8020H CPU has arithmetic and logical capability. A wide variety of arithmetic and logic instructions may be exercised, which affect the contents of the accumulator, and/or direct or indirect scratchpad locations. Provisions have been made for simplified BCD arithmetic capability using the DAA, SWAP A, and XCHD instructions. In addition, MOVP A,@A allows table lookup for display formating and constants. The conditional branch logic within the processor enables several conditions internal and external to the processor to be tested by the users program. Use the conditional jump instructions with the tests listed below to effect a change in the program execution sequence:

Test	Jump Condition	Jump Instructions
Accumulator	A=0 A≠0	JZ JNZ
Carry Flag	0 1	, JC
Timer Overflow Flag	— 1	JTF
Test Input-T1	0 1	JNT1, JT1

Reset

A positive-going signal to the RESET input resets the necessary miscellaneous flip-flops and sets the program counter and stack pointer to zero.

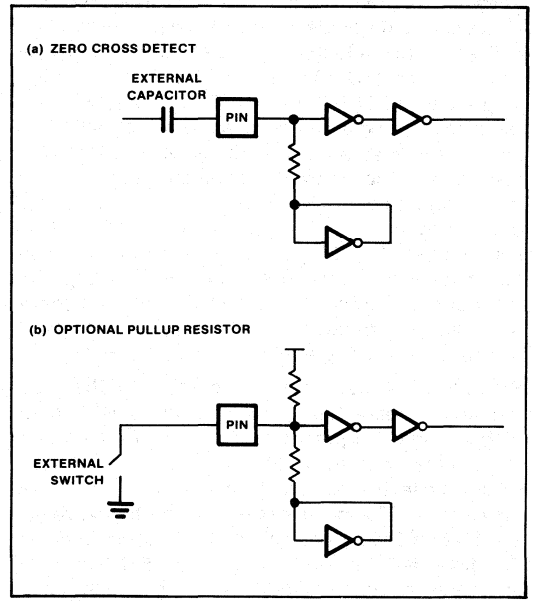

Figure 7. Test 1 Pin

NOT FOR NEW DESIGNS.
SEE 8021H DATA SHEET.

PRELIMINARY

8021

SINGLE COMPONENT 8-BIT MICROCOMPUTER

- 8-Bit CPU, ROM, RAM, I/O in Single 28-Pin Package
- Single 5V Supply (+4.5V to 6.5V)
- 8.38 μsec Cycle With 3.58 MHz XTAL; All Instructions 1 or 2 Cycles
- Instructions—8048 Subset
- High Current Drive Capability—2 Pins
- 1K x 8 ROM
  64 x 8 RAM
  21 I/O Lines
- Interval Timer/Event Counter
- Clock Generated With Single Inductor or Crystal
- Zero-Cross Detection Capability
- Easily Expandable I/O

The Intel® 8021 is a totally self-sufficient 8-bit parallel computer fabricated on a single silicon chip using Intel's N-channel silicon gate MOS process. The features of the 8021 include a subset of the 8048 optimized for low cost, high volume applications, plus additional I/O flexibility and power.

The 8021 contains 1K X 8 program memory, a 64 X 8 data memory, 21 I/O lines, and an 8-bit timer/event counter, in addition to on-board oscillator and clock circuits. For systems that require extra I/O capability, the 8021 can be expanded using the 8243 or discrete logic.

This microprocessor is designed to be an efficient controller as well as an arithmetic processor. The 8021 has bit handling capability as well as facilities for both binary and BCD arithmetic. Efficient use of program memory results from an instruction set consisting mostly of single byte instructions and no instructions over two bytes in length.

To minimize the development problems and maximize flexibility, an 8021 system can be easily designed using the 8021 emulation board, the EM-1. The EM-1 contains a 40-pin socket which can accommodate either the 8748 shipped with the board or an ICE-49 plug. Also, the necessary discrete logic to reproduce the 8021's additional I/O features is included.

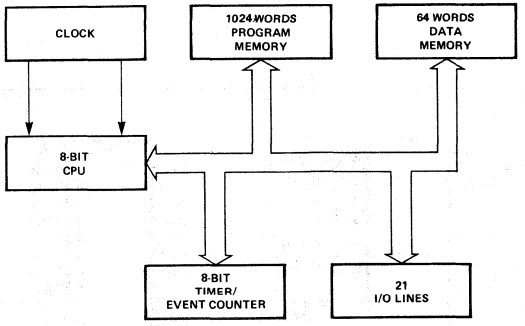

Figure 1.
Block Diagram

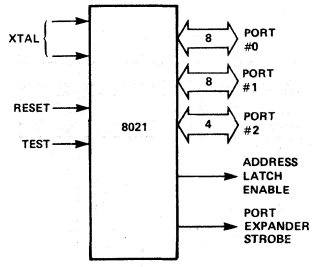

Figure 2.
Logic Symbol

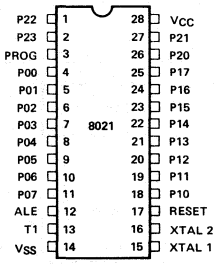

Figure 3. Pin
Configuration

Intel Corporation Assumes No Responsibility for the Use of any Circuitry Other Than Circuitry Embodied in an Intel Product. No Other Circuit Patent Licenses are Implied.
©INTEL CORPORATION, 1980

PRELIMINARY

8021H

HMOS SINGLE-COMPONENT 8-BIT MICROCOMPUTER

- **8-Bit CPU, ROM, RAM, I/O in Single 28-Pin Package**
- **Single 5V Supply (+4.5V to 6.5V)**
- **8.38 μsec Cycle with 3.58 MHz XTAL; All instructions 1 or 2 Cycles**
- **30mA Operation @ 25°C**
- **Instructions—8048 Subset**
- **High Current Drive Capability—2 Pins**
- **1K x 8 ROM**
  64 x 8 RAM
  21 I/O Lines
- **Interval Timer/Event Counter**
- **Clock Generated with Single Inductor or Crystal**
- **Zero-Cross Detection Capability**
- **Easily Expandable I/O**

The Intel® 8021H is a totally self-sufficient 8-bit parallel computer fabricated on a single silicon chip using Intel's advanced N-channel silicon gate HMOS process. The features of the 8021H include a subset of the 8048 features optimized for low cost, high volume applications, plus additional I/O flexibility and power.

The 8021H contains 1K x 8 program memory, a 64 x 8 data memory, 21 I/O lines, and an 8-bit timer/event counter, in addition to on-board oscillator and clock circuits. For systems that require extra I/O capability, the 8021H can be expanded using the 8243 or discrete logic.

This microcomputer is designed to be an efficient controller as well as an arithmetic processor. The 8021H has bit handling capability as well as facilities for both binary and BCD arithmetic. Efficient use of program memory results from an instruction set consisting mostly of single-byte instructions and no instructions over two bytes in length.

To minimize development problems and maximize flexibility, an 8021H system can be easily designed using the 8021H emulation board, the EM-1. The EM-1 contains a 40-pin socket which can accommodate either the 8748 shipped with the board or an ICE-49 plug. Also, the necessary discrete logic to reproduce the 8021H's additional I/O features is included.

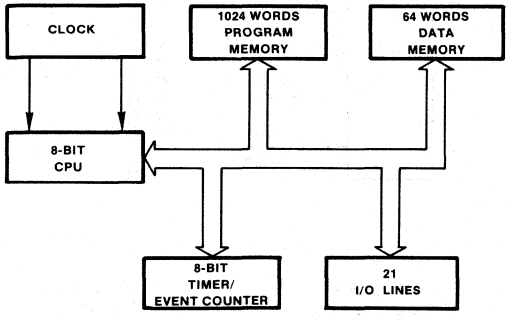

Figure 1. Block Diagram

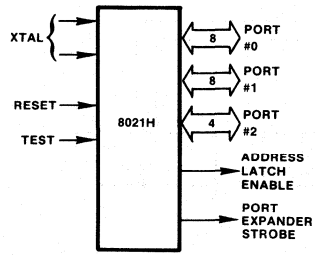

Figure 2. Logic Symbol

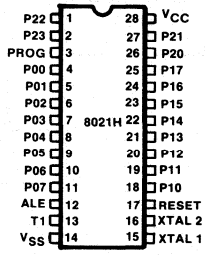

Figure 3. Pin Configuration

Intel Corporation Assumes No Responsibility for the Use of Any Circuitry Other Than Circuitry Embodied in an Intel Product. No Other Circuit Patent Licenses Are Implied.
© INTEL CORPORATION, 1981
AFN-01936A-1

Table 1. Pin Description

Symbol	Pin No.	Function
V_{SS}	14	Circuit GND potential
V_{CC}	28	+5V power supply
PROG	3	Output Strobe for 8243 I/O Expander
P00–P07 Port 0	4–11	8-bit quasi-bidirectional port
P10–P17 Port 1	18–25	8-bit quasi-bidirectional port
P20–P23 Port 2	26–27 1–2	4-bit quasi-bidirectional port P20–P23 also serve as a 4-bit I/O expander bus for 8243
T1	13	Input pin testable using the JT1 and JNT1 instructions. Can be designated the timer/event counter input using the STRT CNT instructions. Also allows zero-crossover sensing of slowly moving AC inputs.
RESET	17	Input used to initialize the processor by clearing status flip-flops and setting program counters to zero.
ALE	12	Address Latch Enable. Signal occurring once every 30 input clocks, used as an output clock.
XTAL1	15	One side of crystal or inductor input for internal oscillator. Also input for external source. (Not TTL compatible.)
XTAL2	16	Other side of timing control element.

Table 2. Instruction Set Summary

Accumulator

Mnemonic	Description	Bytes	Cycles
ADD A, R	Add register to A	1	1
ADD A, @R	Add data memory to A	1	1
ADD A, # data	Add immediate to A	2	2
ADDC A, R	Add with carry	1	1
ADDC A, @R	Add with carry	1	1
ADDC A, # data	Add with carry	2	2
ANL A, R	And register to A	1	1
ANL A, @R	And data memory to A	1	1
ANL A, # data	And immediate to A	2	2
ORL A, R	Or register to A	1	1
ORL A, @R	Or data memory to A	1	1
ORL A, # data	Or immediate to A	2	2
XRL A, R	Exclusive or register to A	1	1
XRL A, @R	Exclusive or data memory to A	1	1
XRL A, # data	Exclusive or immediate to A	2	2
INC A	Increment A	1	1
DEC A	Decrement A	1	1
CLR A	Clear A	1	1
CPL A	Complement A	1	1
DA A	Decimal Adjust A	1	1
SWAP A	Swap nibbles of A	1	1
RL A	Rotate A left	1	1
RLC A	Rotate A left through carry	1	1
RR A	Rotate A right	1	1
RRC A	Rotate A right through carry	1	1

Input/Output

Mnemonic	Description	Bytes	Cycles
IN A, P	Input port to A	1	2
OUTL P, A	Output A to port	1	2
MOVD A, P	Input Expander port to A	1	2
MOVD P, A	Output A to Expander port	1	2
ANLD P, A	And A to Expander port	1	2
ORLD P, A	Or A to Expander port	1	2

Registers

Mnemonic	Description	Bytes	Cycles
INC R	Increment register	1	1
INC @R	Increment data memory	1	1

Branch

Mnemonic	Description	Bytes	Cycles
JMP addr	Jump unconditional	2	2
JMPP @A	Jump indirect	1	2
DJNZ R, addr	Decrement register and Jump on R not zero	2	2

Branch

Mnemonic	Description	Bytes	Cycles
JC addr	Jump on Carry = 1	2	2
JNC addr	Jump on Carry = 0	2	2
JZ addr	Jump on A Zero	2	2
JNZ addr	Jump on A not Zero	2	2
JT1 addr	Jump on T1 = 1	2	2
JNT1 addr	Jump on T1 = 0	2	2
JTF addr	Jump on timer flag	2	2

Subroutine

Mnemonic	Description	Bytes	Cycles
CALL	Jump to subroutine	2	2
RET	Return	1	2

Flags

Mnemonic	Description	Bytes	Cycles
CLR C	Clear Carry	1	1
CPL C	Complement Carry	1	1

AFN-01936A-2

Table 2. Instruction Set Summary (cont.)

Data Moves

Mnemonic	Description	Bytes	Cycles
MOV A, R	Move register to A	1	1
MOV A, @R	Move data memory to A	1	1
MOV A, # data	Move immediate to A	2	2
MOV R, A	Move A to register	1	1
MOV @R, A	Move A to data memory	1	1
MOV R, # data	Move immediate to register	2	2
MOV @R, # data	Move immediate to data memory	2	2
XCH A, R	Exchange A and register	1	1
XCH A, @R	Exchange A and data memory	1	1
XCHD A, @R	Exchange nibble of A and register	1	1
MOVP A, @A	Move to A from current page	1	2

Timer/Counter

Mnemonic	Description	Bytes	Cycles
MOV A, T	Read Timer/Counter	1	1
MOV T, A	Load Timer/Counter	1	1
STRT T	Start Timer	1	1
STRT CNT	Start Counter	1	1
STOP TCNT	Stop Timer/Counter	1	1

Mnemonic	Description	Bytes	Cycles
NOP	No Operation	1	1

ABSOLUTE MAXIMUM RATINGS*

Ambient Temperature Under Bias ..... 0° C to 70° C
Storage Temperature ..... -65° C to +150° C
Voltage on Any Pin with
Respect to Ground ..... -0.5V to +7V
Power Dissipation 1W

**NOTICE: Stresses above those listed under "Absolute Maximum Ratings" may cause permanent damage to the device. This is a stress rating only and functional operation of the device at these or any other conditions above those indicated in the operational sections of this specification is not implied. Exposure to absolute maximum rating conditions for extended periods may affect device reliability.*

D.C. CHARACTERISTICS (T_A = 0° C to 70° C, V_{CC} = 5.5V ± 1V, V_{SS} = 0V)

Symbol	Parameter	Limits			Unit	Test Conditions
		Min	Typ	Max		
V_{IL}	Input Low Voltage	-0.5		0.8	V	
V_{IH}	Input High Voltage (All except XTAL 1 & 2, T1, RESET)	3.0		V_{CC}	V	
V_{IH1}	Input High Voltage (XTAL 1 & 2, T1, RESET)	3.8		V_{CC}	V	
$V_{IH(10\%)}$	Input High Voltage (All except XTAL 1 & 2, T1, RESET)	2.0		V_{CC}	V	V_{CC} = 5.0V ± 10%
$V_{IH1(10\%)}$	Input High Voltage (XTAL 1 & 2, T1, RESET)	3.5		V_{CC}	V	V_{CC} = 5.0V ± 10%
V_{OL}	Output Low Voltage			0.45	V	I_{OL} + 1.6 mA
V_{OL1}	Output Low Voltage (P10, P11)			2.5	V	I_{OL} = 7 mA
V_{OH}	Output High Voltage (All unless Open Drain)	2.4			V	I_{OH} = 40 μA
I_{LO}	Output Leakage Current (Open Drain Option—Port 0)			±10	μA	$V_{SS} + 0.4 \leq V_{IN} \leq V_{CC}$
I_{CC}	V_{CC} Supply Current		30	60	mA	

T1 ZERO CROSS CHARACTERISTICS (T_A = 0° C to 70° C, V_{CC} = 5.5V ± 1V, V_{SS} = 0V, C_L = 80 pF)

Symbol	Parameter	Min	Max	Unit	Test Conditions
V_{ZX}	Zero-Cross Detection Input (T1)	1	3	V_{PP}	AC Coupled, C = .2μF
A_{ZX}	Zero-Cross Accuracy		±135	mV	60 Hz Sine Wave
F_{ZX}	Zero-Cross Detection Input Frequency (T1)	0.05	1	kHz	
t_{CY}	Cycle Time	8.38	50.0		3.58 MHz XTAL = 8.38 μs t_{CY}

AFN-01936A-3

A.C. CHARACTERISTICS (T_A = 0°C to 70°C, V_{CC} = 5.5V ± 1V, V_{SS} = 0V)

Test Conditions: C_L = 80 pF, t_{CY} = 8.38 µs

	Symbol	Parameter	Min.	Max.	Unit	Test Conditions
Normal Operation	t_{CY}	Cycle Time	8.38	50.0	µs	3.58 MHz XTAL
	t_{PRL}	ALE to Time P± Input Must Be Valid (input setup)		4.0	µs	
	t_{PL}	Output Data Setup Time	o.6		µs	
	t_{LP}	Output Data Hold Time	0.6		µs	
	t_{PFL}	Input Data Hold Time	0		µs	
	t_{LL}	ALE Pulse Width	0.8		µs	
	t_R	Reset High	3		t_{CY}	
	R_{XTAL}	Resistor Across XTAL	.5	1		
Expander Operation	t_{CP}	Port Control Setup Before Falling Edgle of PROG	0.3		µs	
	t_{CP}	Port Control Hold After Falling Edge of PROG	0.8		µs	
	t_{PR}	PROG to Time P± Input Must Be Valid	2.0	4.0	µs	
	t_{DP}	Output Data Setup Time	1.0		µs	
	t_{PD}	Output Data Hold Time	0.6		µs	
	t_{PF}	Input Data Hold Time	0	.15	µs	
	t_{PP}	PROG Pulse Width	6.0		µs	

PORT 2 TIMING

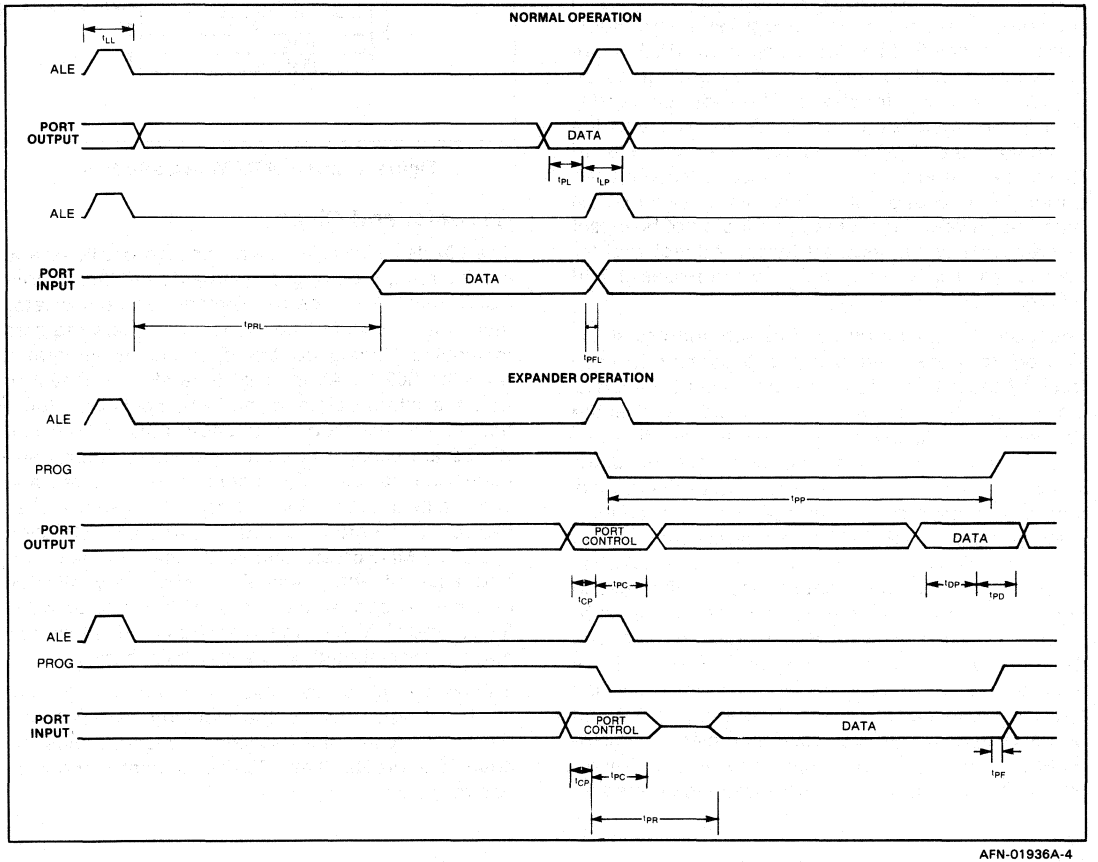

AFN-01936A-4

8021H FUNCTIONAL SPECIFICATIONS

The following is a functional description of the major elements of the 8021H.

Program Memory

The 8021H contains 1K x 8 of mask programmable ROM. No external ROM expansion capability is provided.

Data Memory

A 64 x 8 dynamic RAM is located on chip for data storage. All locations are indirectly addressable and eight designated locations are directly addressable. Also, included in the memory is the address stack, addressed by a 3-bit stack pointer.

Memory is organized as shown in Figure 4. The least significant 8 addresses, 0–7, are directly addressable by any of the 11 direct register instructions. The locations are readily accessible for a variety of operations with the least number of instruction bytes required for their manipulation.

Registers 0 and 1 have another function, in that they can be used to indirectly address all locations in memory, using the indirect register instructions. These indirect RAM address registers, IRAR's, are especially useful for repetitive-type operations on adjacent memory locations. The indirect register instruction specifies which IRAR to use, and the contents of the IRAR is used to address a location in RAM. The contents of the addressed location is used during the execution of the instruction and may be modified. A value larger than 63 should not be preset in the IRAR when selected by an indirect register instruction. IRAR's may point to addresses 0–7, if desired.

Locations 8–23 may be used as the address stack. The address stack enables the processor to keep track of the return addresses generated from CALL instructions. A 3-bit stack pointer (SP) supplies the address of the locations to be loaded with the next return address generated. The SP to this pushdown stack is incremented by one after a return address is stored, and decremented by one before an address is fetched during a RET. The unincremented program counter address is stored in the address stack. The stack contents is incremented before being loaded into the program counter during a return from subroutine. A total of 8 levels of nesting is possible. The SP is initialized to location 8 upon RESET. Since each address is 10-bits long, two bytes must be used to store a single address. The SP is incremented and decremented by one, but each increment or decrement moves the address pointed to by two. Therefore, only even-numbered addresses are pointed to.

If a particular application does not require 8 levels of nesting, the unused portion of the stack may be used as any other indirectly addressable scratchpad location. For example, if only 3 levels of subroutine nesting are used, then only locations 8-13 need be reserved for the address stack, and locations 14–63 can be used for data storage.

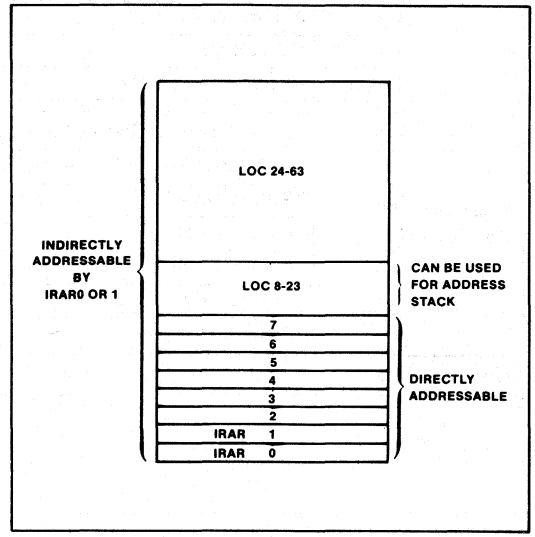

Figure 4. Internal RAM Organization

Oscillator and Clock

The 8021H contains its own onboard oscillator and clock circuit, requiring only an external timing control element. This control element can be a crystal, inductor, or clock in. The capacitor normally required in inductor timing control operation is integrated onto the 8021H. All internal time slots are derived from the external element, and all outputs are a function of the oscillator frequency. Pins XTAL1 and XTAL2 are used to input the particular control element. An instruction cycle consists of 10 states, and each state is a time slot of 3 oscillator periods. (See Figure 5.) Therefore, to obtain a 10 μsec instruction cycle, a 3 MHz crystal should be used. An oscillator frequency of approximately 3 MHz may also be obtained by connecting a 470 μH inductor between XTAL1 and XTAL2. Note that the required inductance may vary and should be adjusted as necessary.

The 8021H utilizes dynamic RAM and certain other dynamic logic. Due to the clocking required with dynamic circuits, the oscillator frequency must be equal to or greater than 600K Hz, or improper operation may occur.

AFN-01936A-5

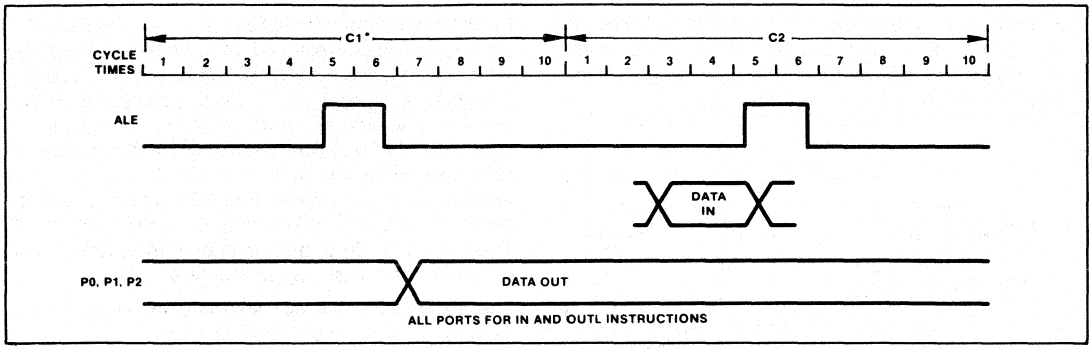

Figure 5. 8021H Timing Diagram

Timer/Event Counter

The 8021H has internal timer/event counter circuits that can monitor elapsed time or count external events that occur during program execution. The circuit has an 8-bit binary up-counter that is presettable and readable with two MOV instructions. These instructions transfer the contents of the accumulator to the counter and vice versa. The counter content is not affected by Reset, and is initialized solely by the MOV T,A instruction. The counter is stopped by a RESET or STOP TCNT instruction and remains stopped until started as a timer by a STRT T instruction or as an event counter by a STRT CNT instruction. Once started, the counter increments to its maximum count (FF), and overflows to zero. The count continues until stopped by a STOP TCNT instruction or RESET. The increment from maximum count to zero (overflow) sets an overflow flag. The state of the overflow flag is testable with the conditional jump instruction JTF. The flag is reset by JTF but not by executing a RESET, unlike the 8748.

By a MOV T,A instruction, the contents of the accumulator are loaded to the timer. At the STRT T command an internal prescaler is zeroed and thereafter increments once each 30 input clocks (once each single cycle instruction, twice each double cycle instruction). The prescaler is a divide by 32. At the (11111) to (00000) transition the timer is incremented. The timer is 8-bits and an overflow (FFH) to (00H) timer flag is set. A conditional branch instruction (JTF) is available for testing this flag, the flag being reset each test. Total count capacity for the timer is $2^8 \times 2^5 = 8192$ or 81.9 msec at a 10 μsec cycle time. Contents of the timer are moved to the accumulator by the MOV A,T instruction without disturbing the counting process. The timer stops upon the STOP TCNT instruction.

The STRT CNT instruction connects the T1 input pin to the event counter input and enables the counter. Subsequent high-to-low transitions on T1 increment the counter. The maximum rate at which the counter can increment is once per three instruction cycles (30μs for a 3 MHz oscillator). There is no minimum frequency. T1 input must remain high for at least 500ns after each transition. The event counter is stopped by a STOP TCNT instruction.

Input/Output Capabilities

The 8021H I/O configurations are highly flexible. A number of different configurations are possible, tailoring an 8021H to a given task. Other than the power supply and dedicated pins, all other pins (20) can be used for input, output, or both, depending on the configuration.

All ports are quasi-bidirectional to facilitate standalone use. A simplified schematic of the quasi-bidirectional interface is shown in Figure 6. This configuration allows buffered outputs, and also allows external input. Data written to these ports is statically latched and remains unchanged until rewritten. As input ports these lines are non-latching, i.e., inputs must be present until read by an input instruction. When writing a "0" or low value to these ports, the large pulldown device sinks an external TTL load. When writing a "1", a large current is supplied through the large pullup device to allow a fast data transfer. After a short time (less than one instruction cycle), the large device is shut off and the small pullup maintains the "1" level indefinitely. However, in this situation, an input device capable of overriding the small amount of sustaining current supplied by the pullup device can be read. (Alternatively, the data written can be read.) So, by writing a "1" to any particular pin, that pin can serve either as a true high-level latched output pin, or as just a pullup resistor on an input. This allows maximum user flexibility in selecting his input or latched output pins, with a minimum of external components.

Port 00–07 is also quasi-bidirectional, except there is no large pullup device. As outputs, this port is essentially open drain.

AFN-01936A-6

By mask option the small pullup devices on P00–P07 may be deleted on any pin providing a true open drain output. This is useful in driving analog circuits and certain loads, such as keyboards.

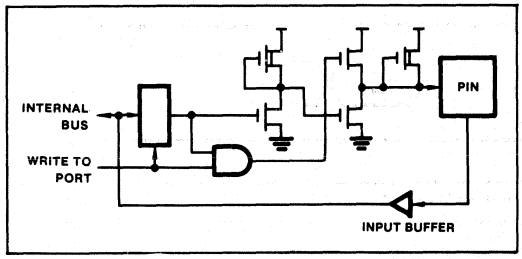

Figure 6. Quasi-Bidirectional Port Structure

T1 Input

The 8021H T1 input line can be used as an input for the following functions:

- Event Counter (external input)
- Test input for branch instructions
- Zero voltage crossing detection

The operation of T1 as an input to the Event Counter is described in the Timer/Event Counter section. When used as a test input, the JT1 and JNT1 instructions test for 1 and 0 levels, respectively.

The T1 pin can also be used to detect the zero crossing of slowly moving AC signals (60 Hz). The self-biasing circuit shown in Figure 7 permits the Test 1 input to detect when the input voltage crosses zero within ±5%; the voltage is then coupled through a 1.0μF capacitor. Maximum input voltage is 3V peak-to-peak. The zero cross detection is especially useful in SCR control of 60 Hz power and in developing time-of-day and other timing routines. As a ROM mask option there is a pullup resistor that is useful for switch contact input or standard TTL.

High Current Outputs

Very high current drive is desirable for minimizing external parts required to do high power control. P10 and P11 have been designated high drive outputs capable of sinking 7mA at V_{SS} + 2.5 volts. (For clarity, this is 7mA to V_{SS} with a 2.5 volt drop across the buffer.) These pins may, of course, be paralleled for 14mA drive if the output logic states are always the same.

Expanded I/O

The 8021H can be used with the 8243 I/O expander chip, which provides additional I/O capability with a limited number of overhead pins. This chip has 4 directly addressable 4-bit ports. It connects to the PROG pin, which provides a clock, and pins P20–P23, which provide address and data. These ports can be written with a MOVD P,A; ANLD P,A; and ORLD P,A for Ports 4–7. A high to low transition on PROG signifies that address and control are available on P20–P23. The previous data on P20–P23 before an output expander instruction is lost. Therefore, when using an output expander P20–P23 are not useful for general input/output. Reading is via the MOVD A,P. This circuit configuration is shown in Figure 8. The timing diagram is shown in Figure 9.

The 8021H can also use standard low-cost TTL to expand the number of I/O lines.

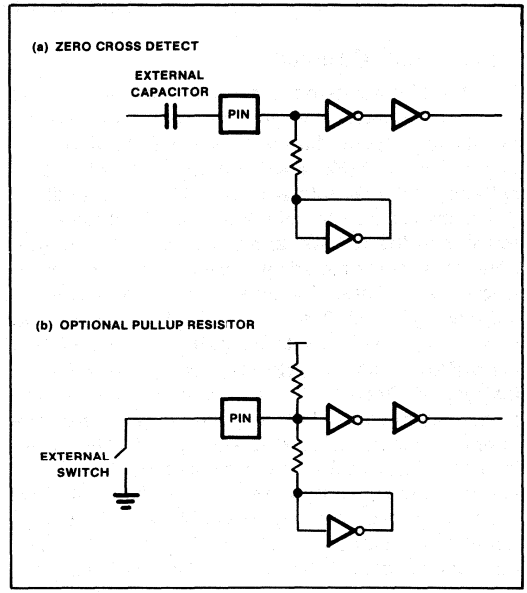

Figure 7. Test 1 Pin

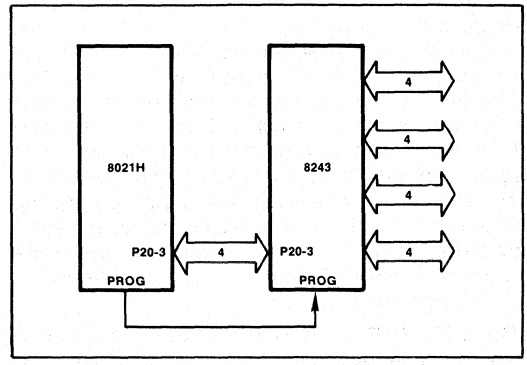

Figure 8. I/O Expander Interface

AFN-01930A-1

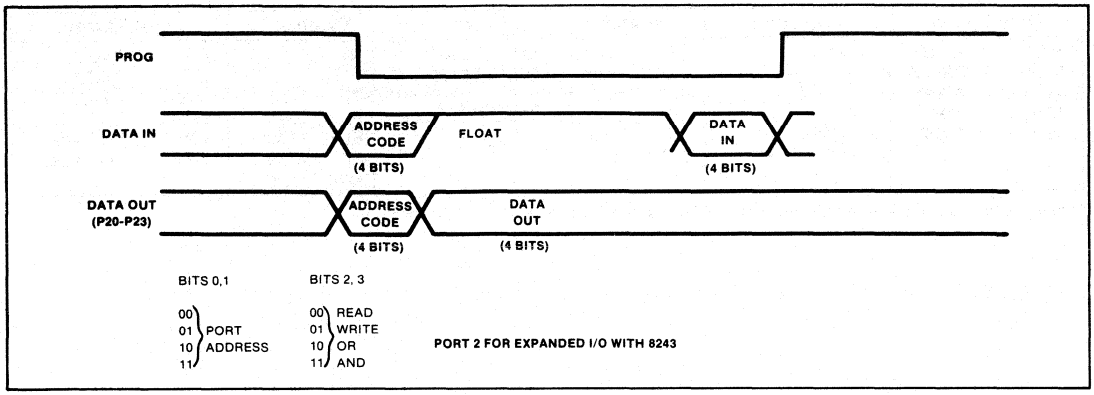

Figure 9. Expanded I/O Timing Diagram

CPU

The 8021H CPU has arithmetic and logical capability. A wide variety of arithmetic and logic instructions may be exercised, which affect the contents of the accumulator and/or direct or indirect scratchpad locations. Provisions have been made for simplified BCD arithmetic capability using the DAA, SWAP A, and XCHD instructions. In addition, MOVP A,@A allows table lookup for display formating and constants. The conditional branch logic within the processor enables several conditions internal and external to the processor to be tested by the users program. Use the conditional jump instructions with the tests listed below to effect a change in the program execution sequence:

Test	Jump Condition	Jump Instructions
Accumulator	A=0 A≠0	JZ JNZ
Carry Flag	0 1	, JC
Timer Overflow Flag	— 1	JTF
Test Input-T1	0 1	JNT1, JT1

Reset

A positive-going signal to the RESET input resets the necessary miscellaneous flip-flops and sets the program counter and stack pointer to zero.

DIFFERENCES BETWEEN THE 8021H AND THE 8748

Although the 8021H is basically an electrical and functional subset of the 8748, there are some differences:

1. *Pin Out*—As the 8021H is a 28-pin DIP, some form of adapter must be used to interface the 8021H socket to ICE-49. An emulation board, EM-1, has been designed to perform this function. The EM-1 also accounts for the increased flexibility of some 8021H I/O lines.
2. *Instruction Time*—The 8021H instruction cycle is 30 clock cycles long, the 8748 instruction cycle is 15 clocks long. Where exact timing is important, the 8748 breadboard part should be operated at half the 8021H clock rate.
3. *Test 1*—To facilitate developing time of day routines from 60 Hz, and for SCR control, the Test 1 pin without the pullup resistor option will detect zero crossing of a capacitively coupled AC input.
4. *Quasi-Bidirectional Ports*—All 8021H ports are quasi-bidirectional to facilitate stand-alone use. Port 0 has open drain outputs and by mask option it may or may not have pullup resistors.
5. *Oscillator*—The 8021H has on-chip oscillator that is optimized for the single resistor mode. External connection will differ from the 8748.
6. *Dynamic RAM and Logic*—The 8021H utilizes dynamic RAM and some dynamic logic. Input clocking must be maintained above the minimum rate or improper operation may result.
7. *High Current Outputs*—Very high current drive is desirable for minimizing external parts required to do high power control. P10 and P11 have been designated high drive outputs capable of sinking 7mA at V_{SS} +2.5 volts. (For clarity, this is 7mA to V_{SS} with a 2.5 volt drop across the buffer.) These pins may, of course, be paralleled for 14mA drive if the output logic states are always the same.
8. *Instruction Set*—The following instructions, which are found in the 8748, have been deleted from the 8021H instruction set:

AFN-01936A-8

Data Moves		Registers		Branch		Timer		Control		Input/Output	
MOV	A,PSW	DEC	R	JT0	addr	EN	TCNTI	EN	I	ANL	P,#data
MOV	PSW,A	**Flags**		JNT0	addr	DIS	TCNTI	DIS	I	ORL	P,#data
MOVX	A,@R	CLR	F0	JF0	addr	**Subroutine**		SEL	RB0	INS	A,BUS*
MOVX	@R,A	CPL	F0	JF1	addr	RETR		SEL	RB1	OUTL	BUS,A*
MOVP3	A,@A	CLR	F1	JNI	addr			SEL	MB0	ANL	BUS,#data
		CPL	F1	JBb	addr			SEL	MB1	ORL	BUS,#data
								ENT0	CLK		

*These instructions have been replaced in the 8021H by IN A,PO and OUTL PO,A, respectively.

AFN-01936A-9

PRELIMINARY

8022

SINGLE COMPONENT 8-BIT MICROCOMPUTER WITH ON-CHIP A/D CONVERTER

- 8-Bit CPU, ROM, RAM, I/O in Single 40-Pin Package
- On-Chip 8-Bit A/D Converter; Two Input Channels
- 8 Comparator Inputs (Port 0)
- Zero-Cross Detection Capability
- Single 5V Supply (4.5V to 6.5V)
- High Current Drive Capability—2 Pins
- Two Interrupts—External and Timer
- 2K x 8 ROM, 64 x 8 RAM, 28 I/O Lines
- 8.38 μsec Cycle; All Instructions 1 or 2 Cycles
- Instructions—8048 Subset
- Interval Timer/Event Counter
- Clock Generated with Single Inductor or Crystal
- Easily Expanded I/O

The Intel® 8022 is the newest member of the MCS-48™ family of single chip 8-bit microcomputers. It is designed to satisfy the requirements of low cost, high volume applications which involve analog signals, capacitive touchpanel keyboards, and/or large ROM space. The 8022 addresses these applications by integrating many new functions on-chip, such as A/D conversion, comparator inputs and zero-cross detection.

The features of the 8022 include 2K bytes of program memory (ROM), 64 bytes of data memory (RAM), 28 I/O lines, an on-chip A/D converter with two input channels, an 8-bit port with comparator inputs for interfacing to low voltage capacitive touchpanels or other non-TTL interfaces, external and timer interrupts, and zero-cross detection capability. In addition, it contains the 8-bit interval timer/event counter, on-board oscillator and clock circuitry, single 5V power supply requirement, and easily expandable I/O structure common to all members of the MCS-48 family.

The 8022 is designed to be an efficient controller as well as an arithmetic processor. It has bit handling capability plus facilities for both binary and BCD arithmetic. Efficient use of program memory results from using the MCS-48 instruction set which consists mostly of single byte instructions and has extensive conditional jump and direct table lookup capability. Program memory usage is further reduced via the 8022's hardware implementation of the A/D

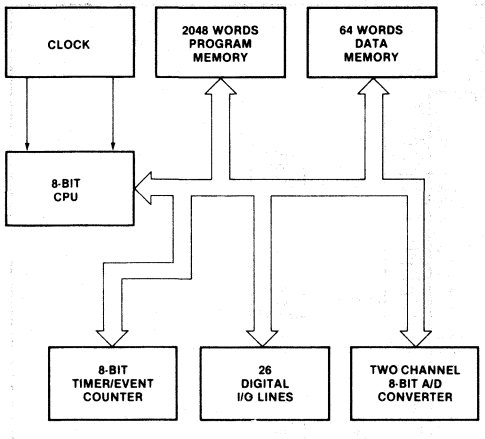

Figure 1. Block Diagram

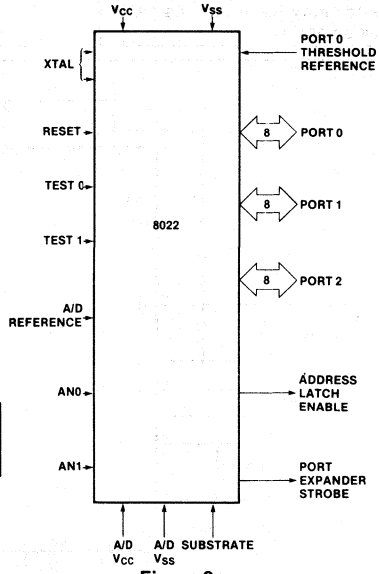

Figure 2. Logic Symbol

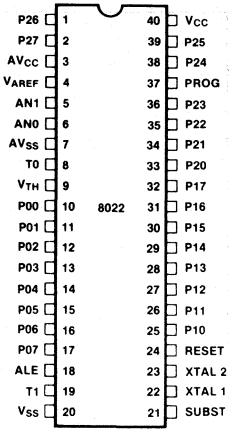

Figure 3. Pin Configuration

Intel Corporation Assumes No Responsibility for the Use of any Circuitry Other Than Circuitry Embodied in an Intel Product. No Other Circuit Patent Licenses are Implied.
©INTEL CORPORATION, 1980

Table 1. Pin Description

Desig-nation	Pin No.	Function
VSS	20	Circuit GND potential.
VCC	40	+ 5V circuit power supply.
PROG	37	Output strobe for Intel® 8243 I/O expander.
P00-P07 Port 0	10-17	8-bit open-drain port with comparator inputs. The switching threshold is set externally by VTH. Optional pull-up resistors may be added via ROM mask selection.
VTH	9	Port 0 threshold reference pin.
P10-P17 Port 1	25-32	8-bit quasi-bidirectional port.
P20-P27 Port 2	33-36 38-39 1-2	8-bit quasi-bidirectional port. P20-23 also serve as a 4-bit I/O expander for Intel® 8243.
T0	8	Interrupt input and input pin testable using the conditional transfer instructions JT0 and JNT0. Initiates an interrupt following a low level input if interrupt is enabled. Interrupt is disabled after a reset.
T1	19	Input pin testable using the JT1 and JNT1 conditional transfer instructions. Can be designated the timer/event counter input using the STRT CNT instruction. Also serves as the zero-cross detection input to allow zero-crossover sensing of slowly moving AC inputs. Optional pull-up resistor may be added via ROM mask selection.

Desig-nation	Pin No.	Function
RESET	24	Input used to initialize the processor by clearing status flip-flops and setting the program counter to zero.
AVSS	7	A/D converter GND Potential. Also establishes the lower limit of the conversion range.
AVCC	3	A/D + 5V power supply.
SUBST	21	Substrate pin used with a bypass capacitor to stabilize the substrate voltage and improve A/D accuracy.
VAREF	4	A/D converter reference voltage. Establishes the upper limit of the conversion range.
AN0, AN1	6,5	Analog inputs to A/D converter. Software selectable on-chip via SEL AN0 and SEL AN1 instructions.
ALE	18	Address Latch Enable. Signal occurring once every 30 input clocks (once every cycle), used as an output clock.
XTAL 1	22	One side of crystal or inductor input for internal oscillator. Also input for external frequency source. (Not TTL compatible.)
XTAL 2	23	Other side of timing control element. This pin is not connected when an external frequency source is used.

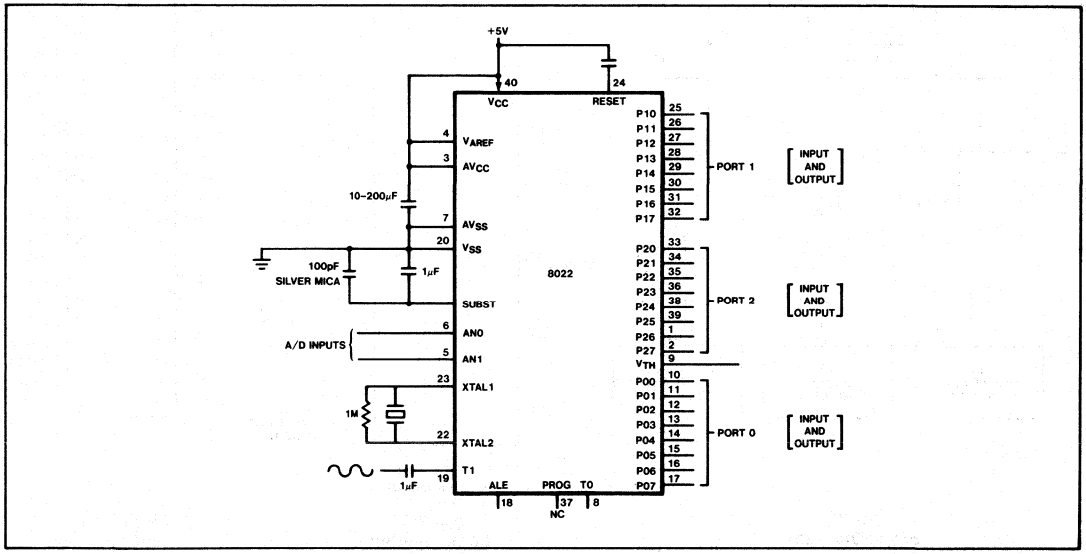

Figure 3.The Stand Alone 8022

ABSOLUTE MAXIMUM RATINGS*

Ambient Temperature Under Bias ..... 0°C to 70°C
Storage Temperature ..... -65°C to +150°C
Voltage on Any Pin with
Respect to Ground ..... -0.5V to +7V
Power Dissipation ..... 1 Watt

**NOTICE: Stresses above those listed under "Absolute Maximum Ratings" may cause permanent damage to the device. This is a stress rating only and functional operation of the device at these or any other conditions above those indicated in the operational sections of this specification is not implied. Exposure to absolute maximum rating conditions for extended periods may affect device reliability.*

D.C. CHARACTERISTICS T_A = 0°C to 70°C, V_{CC} = 5.5V ± 1V, V_{SS} = 0V

Symbol	Parameter	Limits			Unit	Test Conditions
		Min	Typ	Max		
V_{IL}	Input Low Voltage	−0.5		0.8	V	VTH Floating
VIH1	Input Low Voltage (Port 0)	−0.5		VTH-0.1	V	
VIH	High Voltage (All except XTAL 1, RESET)	2.0		VCC	V	VCC = 5.0V ± 10% VTH Floating
VIH1	Input High Voltage (All except XTAL 1, RESET)	3.0		VCC	V	VCC = 5.5V ± 1V VTH Floating
VIH2	Input High Voltage (Port 0)	VTH+0.1		VCC	V	
VIH3	Input High Voltage (RESET, XTAL 1)	3.0		VCC	V	VCC = 5.0V ± 10%
VTH	Port 0 Threshold Reference Voltage	0		.4VCC	V	
VOL	Output Low Voltage			0.45	V	IOL = 1.6 mA
VOL1	Output Low Voltage (P10, P11)			2.5	V	IOL = 7 mA
VOH	Output High Voltage (all unless Open Drain Option—Port 0)	2.4			V	IOH = 50 μA
ILI	Input Current (T1)			± 200	μA	VCC ≥ VIN ≥ VSS+.45V
ILO	Output Leakage Current (Open Drain Option—Port 0)			± 10	μA	VCC ≥ VIN ≥ VSS+0.45V
ICC	VCC Supply Current		50	100	mA	

A.C. CHARACTERISTICS T_A = 0°C to 70°C, V_{CC} = 5.5V ± 1V, V_{SS} = 0V

Symbol	Parameter	Min	Max	Unit	Test Conditions
tCY	Cycle Time	8.38	50.0	μS	3 MHz XTAL = 10 μs tCY
VZX	Zero-Cross Detection Input (T1)	1	3	VACpp	AC Coupled
AZX	Zero-Cross Accuracy		± 135	mV	60 Hz Sine Wave
FZX	Zero-Cross Detection Input Frequency (T1)	0.05	1	kHz	

A.C. CHARACTERISTICS $T_A = 0°C$ to $70°C$, $V_{CC} = 5.5V \pm 1V$, $V_{SS} = 0V$

Test Conditions: $C_L = 80$ pF $t_{CY} = 8.38\ \mu s$

	Symbol	Parameter	Min	Max	Unit	Notes
Expander Operation	t_{CP}	Port Control Setup Before Falling Edge of PROG	0.5		μs	
	t_{PC}	Port Control Hold After Falling Edge of PROG	0.8		μs	
	t_{PR}	PROG to Time P2 Input Must Be Valid		1.0	μs	
	t_{DP}	Output Data Setup Time	7.0		μs	
	t_{PD}	Output Data Hold Time	8.3		μs	
	t_{PF}	Input Data Hold Time	0	.150	μs	
	t_{PP}	PROG Pulse Width	8.3		μs	
	t_{PRL}	ALE to Time P2 Input Must Be Valid		3.6	μs	
Normal Operation	t_{PL}	Output Data Setup Time	0.8		μs	
	t_{LP}	Output Data Hold Time	1.6		μs	
	t_{PFL}	Input Data Hold Time	0		μs	
	t_{LL}	ALE Pulse Width	3.9	23.0	μs	$t_{CY} = 8.38\ \mu s$ for min

Port 2 Timing

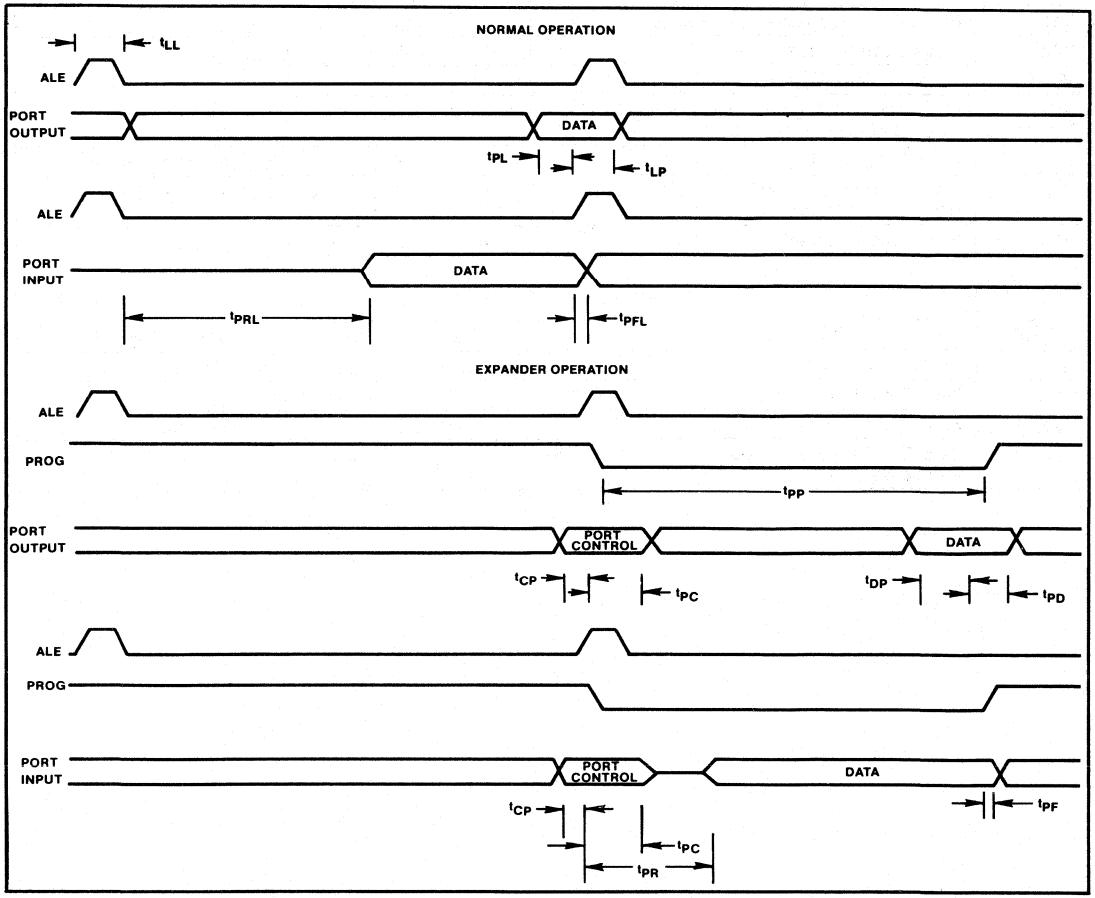

AFN-00187A-04

A/D CONVERTER CHARACTERISTICS

T_A = 0° C to 70° C, V_{CC} = 5.5V ± 1V, V_{SS} = 0V, AV_{CC} = 5.5V ± 1V, AV_{SS} = 0V, $AV_{CC}/2 \leqslant V_{AREF} \leqslant AV_{CC}$

Parameter	Min	Typ	Max	Unit	Comments
Resolution	8			Bits	
Absolute Accuracy			.8% FSR ± ½ LSB	LSB	(Note 1)
Sample Setup Before Falling Edge of ALE (t_{SS})		0.20		t_{CY}	
Sample Hold After Falling Edge of ALE (t_{SH})		0.10		t_{CY}	
Input Capacitance (AN0, AN1)		1		pF	
Conversion Time	4		4	t_{CY}	

Analog Input Timing

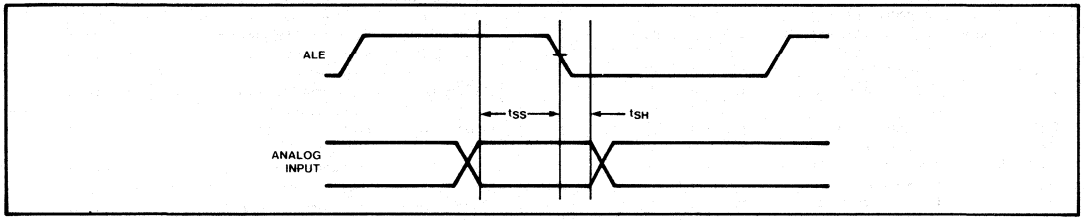

NOTE:

1. The analog input must be maintained at a constant voltage during the sample time ($t_{SS} + t_{SH}$).

Table 2. Instruction Set Summary

	Mnemonic	Description	Bytes	Cycle	Hexadecimal Opcode
Accumulator	ADD A,R_r	Add register to A	1	1	68-6F
	ADD A,@ R	Add data memory to A	1	1	60-61
	ADD A,#data	Add immediate to A	2	2	03
	ADDC A,R_r	Add register with carry	1	1	78-7F
	ADDC A,@ R	Add data memory with carry	1	1	70-71
	ADDC A,#data	Add immediate with carry	2	2	13
	ANL A,R_r	And register to A	1	1	58-5F
	ANL A,@ R	And data memory to A	1	1	50-51
	ANL A,#data	And immediate to A	2	2	53
	ORL A,R_r	Or register to A	1	1	48-4F
	ORL A,@ R	Or data memory to A	1	1	40-41
	ORL A,#data	Or immediate to A	2	2	43
	XRL A,R_r	Exclusive Or register to A	1	1	D8-DF
	XRL A,@ R	Exclusive Or data memory to A	1	1	D0-D1
	XRL A,#data	Exclusive Or immediate to A	2	2	D3
	INC A	Increment A	1	1	17
	DEC A	Decrement A	1	1	07
	CLR A	Clear A	1	1	27
	CPL A	Complement A	1	1	37
	DA A	Decimal adjust A	1	1	57
	SWAP A	Swap nibbles of A	1	1	47
	RL A	Rotate A left	1	1	E7
	RLC A	Rotate A left through carry	1	1	F7
	RR A	Rotate A right	1	1	77
	RRC A	Rotate A right through carry	1	1	67
Input/Output	IN A, P_p	Input port to A	1	2	08,09,0A
	OUTL P_p,A	Output A to port	1	2	90,39,3A
	MOVD A,P_p	Input expander port to A	1	2	0C-0F
	MOVD P_p,A	Output A to expander port	1	2	3C-3F
	ANLD P_p,A	And A to expander port	1	2	9C-9F
	ORLD P_p,A	Or A to expander port	1	2	8C-8F
Registers	INC R_r	Increment register	1	1	18-1F
	INC @ R	Increment data memory	1	1	10-11
Branch	JMP addr	Jump unconditional	2	2	04,24,44,64, 84,A4,C4,E4
	JMPP @ A	Jump indirect	1	2	B3
	DJNZ R,addr	Decrement register and jump on R not zero	2	2	E8-EF
	JC addr	Jump on carry=1	2	2	F6
	JNC addr	Jump on carry=0	2	2	E6
	JZ addr	Jump on A zero	2	2	C6
	JNZ addr	Jump on A not zero	2	2	96

	Mnemonic	Description	Bytes	Cycle	Hexadecimal Opcode
	JTO addr	Jump on T0=1	2	2	36
	JNTO addr	Jump on T0=0	2	2	26
	JT1 addr	Jump on T1=1	2	2	56
	JNT1 addr	Jump on T1=0	2	2	46
	JTF addr	Jump on timer flag	2	2	16
Subroutine	CALL addr	Jump to subroutine	1	2	14,34,54,74 94,B4,D4,F4
	RET	Return	1	2	83
Flags	CLR C	Clear carry	1	1	97
	CPL C	Complement carry	1	1	A7
Data Moves	MOV A,R_r	Move register to A	1	1	F8-FF
	MOV A,@ R	Move data memory to A	1	1	F0-F1
	MOV A,#data	Move immediate to A	2	2	23
	MOV R_r,A	Move A to register	1	1	A8-AF
	MOV @ R,A	Move A to data memory	1	1	A0-A1
	MOV R_r,#data	Move immediate to register	2	2	B8-BF
	MOV@R,#data	Move immediate to data memory	2	2	B0-B1
	XCH A,R_r	Exchange A and register	1	1	28-2F
	XCH A,@ R	Exchange A and data memory	1	1	20-21
	XCHD a,@ R	Exchange nibble of A and register	1	1	30-31
	MOVP A,@ A	Move to A from current page	1	2	A3
Timer/Counter	MOV A,T	Read timer/counter	1	1	42
	MOV T,A	Load timer/counter	1	1	62
	STRT T	Start timer	1	1	55
	STRT CNT	Start counter	1	1	45
	STOP TCNT	Stop timer/counter	1	1	65
A/D Converter	RAD	Move conversion result register to A	1	2	80
	SEL AN0	Select analog input zero	1	1	85
	SEL AN1	Select analog input one	1	1	95
Interrupts	EN I	Enable external interrupt	1	1	05
	DIS I	Disable external interrupt	1	1	15
	EN TCNTI	Enable timer/counter interrupt	1	1	25
	DIS TCNTI	Disable timer/counter interrupt	1	1	35
	RET I	Return from interrupt	1	2	93
	NOP	No operation	1	1	00

SYMBOLS AND ABBREVIATIONS USED

A	Accumulator
addr	11-Bit Program Memory Address
AN0, AN1	Analog Input 0, Analog Input 1
CNT	Event Counter
data	8-Bit Number or Expression
I	Interrupt
P	Mnemonic for "in-page" Operation
P_p	Port Designator (P=0, 1, 2 or 4-7)
R_r	Register Designator (r=0-7)
T	Timer
T0, T1	Test 0, Test 1
#	Immediate Data Prefix
@	Indirect Address Prefix

8022H
HIGH PERFORMANCE SINGLE COMPONENT 8-BIT MICROCOMPUTER WITH ON-CHIP A/D CONVERTER

- 8-Bit CPU, ROM, RAM, I/O in Single 40-Pin Package
- On-Chip 8-Bit A/D Converter; Two Input Channels
- 8 Comparator Inputs (Port 0)
- Zero-Cross Detection Capability
- Single 5V Supply (4.5V to 6.5V)
- Two Interrupts—External and Timer
- 2K x 8 ROM, 64 x 8 RAM, 28 I/O Lines
- 5 μsec Cycle; All Instructions 1 or 2 Cycles (6 MHz Clock)
- Instructions—8048 Subset
- Interval Time/Event Counter
- Clock Generated with Single Inductor or Crystal
- Easily Expanded I/O

The Intel® 8022H is designed to satisfy the requirements of low cost, high volume applications which involve analog signals, capacitive touchpanel keyboards, and/or large ROM space. The 8022H addresses these applications by integrating many new functions on-chip, such as A/D conversion, comparator inputs and zero-cross detection.

The features of the 8022H include 2K bytes of program memory (ROM), 64 bytes of data memory (RAM), 28 I/O lines, an on-chip A/D converter with two input channels, an 8-bit port with comparator inputs for interfacing to low voltage capacitive touchpanels or other non-TTL interfaces, external timer interrupts, and zero-cross detection capability. In addition, it contains the 8-bit interval timer/event counter, on-board oscillator and clock circuitry, single 5V power supply requirement, and easily expandable I/O structure common to all members of the MCS-48 family.

The 8022H is designed to be an efficient controller as well as an arithmetic processor. It has bit handling capability plus facilities for both binary and BCD arithmetic. Efficient use of program memory results from using the MCS-48 instruction set which consists mostly of single byte instructions and has extensive conditional jump and direct table lookup capability. Program memory usage is further reduced via the 8022H's hardware implementation of the A/D converter which simplifies interfacing to analog signals.

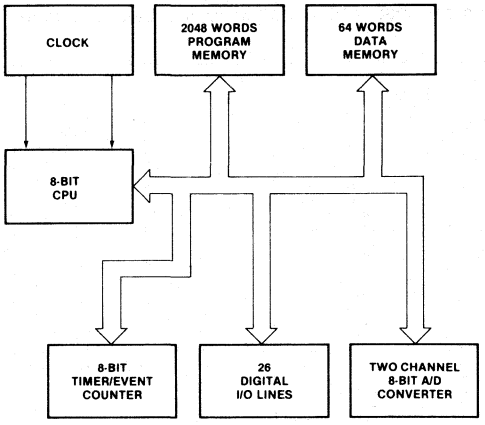

Figure 1. Block Diagram

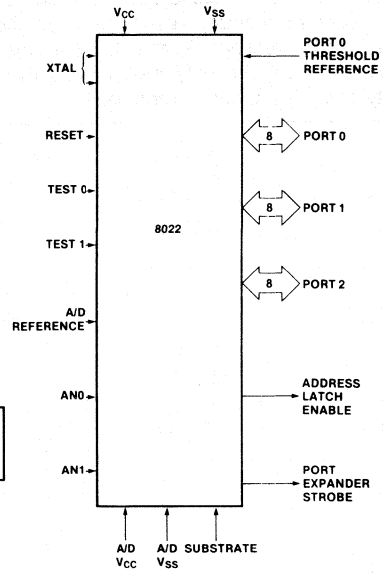

Figure 2. Logic Symbol

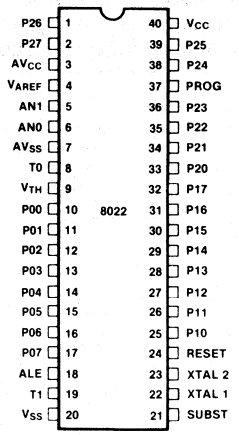

Figure 3. Pin Configuration

Intel Corporation Assumes No Responsibility for the Use of any Circuitry Other Than Circuitry Embodied in an Intel Product. No Other Circuit Patent Licenses are Implied.
©INTEL CORPORATION, 1980

AFN-01814A

PRELIMINARY

8031/8051/8751
SINGLE-COMPONENT 8-BIT MICROCOMPUTER

- 8031 - Control Oriented CPU With RAM and I/O
- 8051 - An 8031 With Factory Mask-Programmable ROM
- 8751 - An 8031 With User Programmable/Erasable EPROM

- 4K x 8 ROM/EPROM
- 128 x 8 RAM
- Four 8-Bit Ports, 32 I/O Lines
- Two 16-Bit Timer/Event Counters
- High-Performance Full-Duplex Serial Channel
- External Memory Expandable to 128K
- Compatible with MCS-80®/MCS-85® Peripherals
- Boolean Processor
- MCS-48® Architecture Enhanced with:
  - Non-Paged Jumps
  - Direct Addressing
  - Four 8-Register Banks
  - Stack Depth Up to 128-Bytes
  - Multiply, Divide, Subtract, Compare
- Most Instructions Execute in 1μs
- 4μs Multiply and Divide

The Intel® 8031/8051/8751 is a stand-alone, high-performance single-chip computer fabricated with Intel's highly-reliable +5 Volt, depletion-load, N-Channel, silicon-gate HMOS technology and packaged in a 40-pin DIP. It provides the hardware features, architectural enhancements and new instructions that are necessary to make it a powerful and cost effective controller for applications requiring up to 64K bytes of program memory and/or up to 64K bytes of data storage.

The 8051/8751 contains a non-volatile 4K x 8 read-only program memory; a volatile 128 x 8 read/write data memory; 32 I/O lines; two 16-bit timer/counters; a five-source, two-priority-level, nested interrupt structure; a serial I/O port for either multi-processor communications, I/O expansion, or full duplex UART; and on-chip oscillator and clock circuits. The 8031 is identical, except that it lacks the program memory. For systems that require extra capability, the 8051 can be expanded using standard TTL compatible memories and the byte oriented MCS-80 and MCS-85 peripherals.

The 8051 microcomputer, like its 8048 predecessor, is efficient both as a controller and as an arithmetic processor. The 8051 has extensive facilities for binary and BCD arithmetic and excels in bit-handling capabilities. Efficient use of program memory results from an instruction set consisting of 44% one-byte, 41% two-byte, and 15% three-byte instructions. With a 12 MHz crystal, 58% of the instructions execute in 1μs, 40% in 2μs and multiply and divide require only 4μs. Among the many instructions added to the standard 8048 instruction set are multiply, divide, subtract and compare.

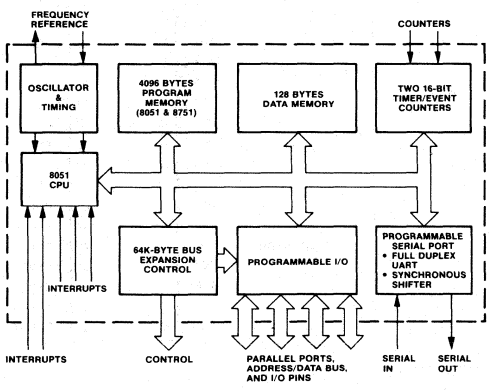

Figure 1.
Block Diagram

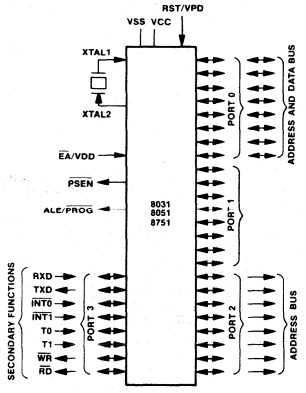

Figure 2.
Logic Symbol

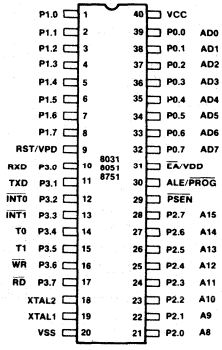

Figure 3. Pin
Configuration

Intel Corporation Assumes No Responsibility for the Use of any Circuitry Other Than Circuitry Embodied in an Intel Product. No Other Circuit Patent Licenses are Implied.
©INTEL CORPORATION, 1980

AFN-01462B-01

INTRODUCTION

This data sheet provides an introduction to the 8051 family. A detailed description of the hardware required to expand the 8051 with more program memory, data memory, I/O, specialized peripherals and into multiprocessor configurations is described in the 8051 Family User's Manual.

The 8051 Family

The 8051 is a stand-alone high-performance single-chip computer intended for use in sophisticated real-time applications such as instrumentation, industrial control and intelligent computer peripherals. It provides the hardware features, architectural enhancements and new instructions that make it a powerful and cost effective controller for applications requiring up to 64K-bytes of program memory and/or up to 64K-bytes of data storage. A Block Diagram is shown in Figure 1.

The 8031 is a control-oriented CPU without on-chip program memory. It can address 64K-bytes of external Program Memory in addition to 64K-bytes of External Data Memory. For systems requiring extra capability, each member of the 8051 family can be expanded using standard memories and the byte oriented MCS-80 and MCS-85 peripherals. The 8051 is an 8031 with the lower 4K-bytes of Program Memory filled with on-chip mask programmable ROM while the 8751 has 4K-bytes of UV-light-erasable/electrically-programmable ROM.

The three pin-compatible versions of this component reduce development problems to a minimum and provide maximum flexibility. The 8751 is well suited for development, prototyping, low-volume production and applications requiring field updates; the 8051 for low-cost, high volume production; and the 8031 for applications desiring the flexibility of external Program Memory which can be easily modified and updated in the field.

MACRO-VIEW OF THE 8051 ARCHITECTURE

On a single die the 8051 microcomputer combines CPU; non-volatile 4K x 8 read-only program memory; volatile 128 x 8 read/write data memory; 32 I/O lines; two 16-bit timer/event counters; a five-source, two-priority-level, nested interrupt structure; serial I/O port for either multi-processor communications, I/O expansion, or full duplex UART; and on-chip oscillator and clock circuits. This section will provide an overview of the 8051 by providing a high-level description of its major elements: the CPU architecture and the on-chip functions peripheral to the CPU. The generic term "8051" is used to refer collectively to the 8031, 8051, and 8751.

8051 CPU Architecture

The 8051 CPU manipulates operands in four memory spaces. These are the 64K-byte Program Memory, 64K-byte External Data Memory, 384-byte Internal Data Memory and 16-bit Program Counter spaces. The Internal Data Memory address space is further divided into the 256-byte Internal Data RAM and 128-byte Special Function Register (SFR) address spaces shown in Figure 4. Four Register Banks (each with eight registers), 128 addressable bits, and the stack reside in the Internal Data RAM. The stack depth is limited only by the available Internal Data RAM and its location is determined by the 8-bit stack pointer. All registers except the Program Counter and the four 8-Register Banks reside in the Special Function Register address space. These memory mapped registers include arithmetic registers, pointers, I/O ports, interrupt system registers, timers and serial port. 128 bit locations in the SFR address space are addressable as bits. The 8051 contains 128 bytes of Internal Data RAM and 20 SFRs.

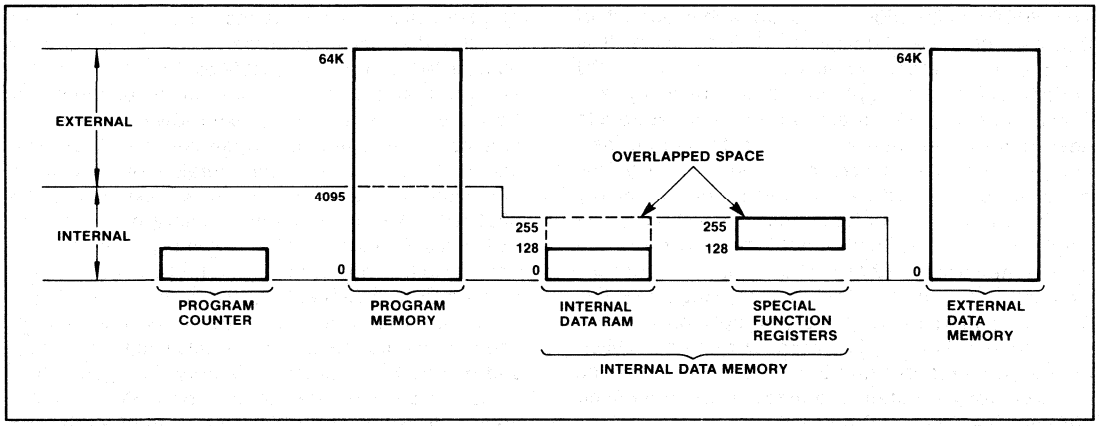

Figure 4. 8051 Family Memory Organization

The 8051 provides a non-paged Program Memory address space to accommodate relocatable code. Conditional branches are performed relative to the Program Counter. The register-indirect jump permits branching relative to a 16-bit base register with an offset provided by an 8-bit index register. Sixteen-bit jumps and calls permit branching to any location in the contiguous 64K Program Memory address space.

The 8051 has five methods for addressing source operands: Register, Direct, Register-Indirect, Immediate and Base-Register- plus Index-Register-Indirect Addressing. The first three methods can be used for addressing destination operands. Most instructions have a "destination, source" field that specifies the data type, addressing methods and operands involved. For operations other than moves, the destination operand is also a source operand.

Registers in the four 8-Register Banks can be accessed through Register, Direct, or Register-Indirect Addressing; the 128 bytes of Internal Data RAM through Direct or Register-Indirect Addressing; and the Special Function Registers through Direct Addressing. External Data Memory is accessed through Register-Indirect Addressing. Look-Up-Tables resident in Program Memory can be accessed through Base-Register- plus Index-Register- Indirect Addressing.

The 8051 is classified as an 8-bit machine since the internal ROM, RAM, Special Function Registers, Arithmetic/Logic Unit and external data bus are each 8-bits wide. The 8051 performs operations on bit, nibble, byte and double-byte data types.

The 8051 has extensive facilities for byte transfer, logic, and integer arithmetic operations. It excels at bit handling since data transfer, logic and conditional branch operations can be performed directly on Boolean variables.

The 8051's instruction set is an enhancement of the instruction set familiar to MCS-48 users. It is enhanced to allow expansion of on-chip CPU peripherals and to optimize byte efficiency and execution speed. Op codes were reassigned to add new high-power operations and to permit new addressing modes which make the old operations more orthogonal. Efficient use of program memory results from an instruction set consisting of 49 single-byte, 45 two-byte and 17 three-byte instructions. When using a 12 MHz oscillator, 64 instructions execute in 1μs and 45 instructions execute in 2μs. The remaining instructions (multiply and divide) execute in only 4μs. The number of bytes in each instruction and the number of oscillator periods required for execution are listed in the appended 8051 Instruction Set Summary.

On-Chip Peripheral Functions

Thus far only the CPU and memory spaces of the 8051 have been described. In addition to the CPU and memories, an interrupt system, extensive I/O facilities, and several peripheral functions are integrated on-chip to relieve the CPU of repetitious, complicated or time-critical tasks and to permit stringent real-time control of external system interfaces. The extensive I/O facilities include the I/O pins, parallel I/O ports, bidirectional address/data bus and the serial port for I/O expansion. The CPU peripheral functions integrated on-chip are the two 16-bit counters and the serial port. All of these work together to greatly boost system performance.

INTERRUPT SYSTEM

External events and the real-time-driven on-chip peripherals require service by the CPU asynchronous to the execution of any particular section of code. To tie the asynchronous activities of these functions to normal program execution, a sophisticated multiple-source, two-priority-level, nested interrupt system is provided. Interrupt response latency ranges from 3μs to 7μs when using a 12 MHz crystal.

The 8051 acknowledges interrupt requests from five sources: Two from external sources via the $\overline{\text{INT0}}$ and $\overline{\text{INT1}}$ pins, one from each of the two internal counters and one from the serial I/O port. Each interrupt vectors to a separate location in Program Memory for its service program. Each of the five sources can be assigned to either of two priority levels and can be independently enabled and disabled. Additionally all enabled sources can be globally disabled or enabled. Each external interrupt is programmable as either level- or transition-activated and is active-low to allow the "wire or-ing" of several interrupt sources to the input pin. The interrupt system is shown diagrammatically in Figure 5.

I/O FACILITIES

The 8051 has instructions that treat its 32 I/O lines as 32 individually addressable bits and as four parallel 8-bit ports addressable as Ports 0, 1, 2 and 3. Ports 0, 2 and 3 can also assume other functions. Port 0 provides the multiplexed low-order address and data bus used for expanding the 8051 with standard memories and peripherals. Port 2 provides the high-order address bus when expanding the 8051 with external Program Memory or more than 256 bytes of External Data Memory. The pins of Port 3 can be configured individually to provide external interrupt request inputs, counter inputs, the serial port's receiver input and transmitter output, and to generate the control signals used for reading and writing External Data Memory. The generation or use of an alternate function on a Port 3 pin is done automatically by the 8051 as long as the pin

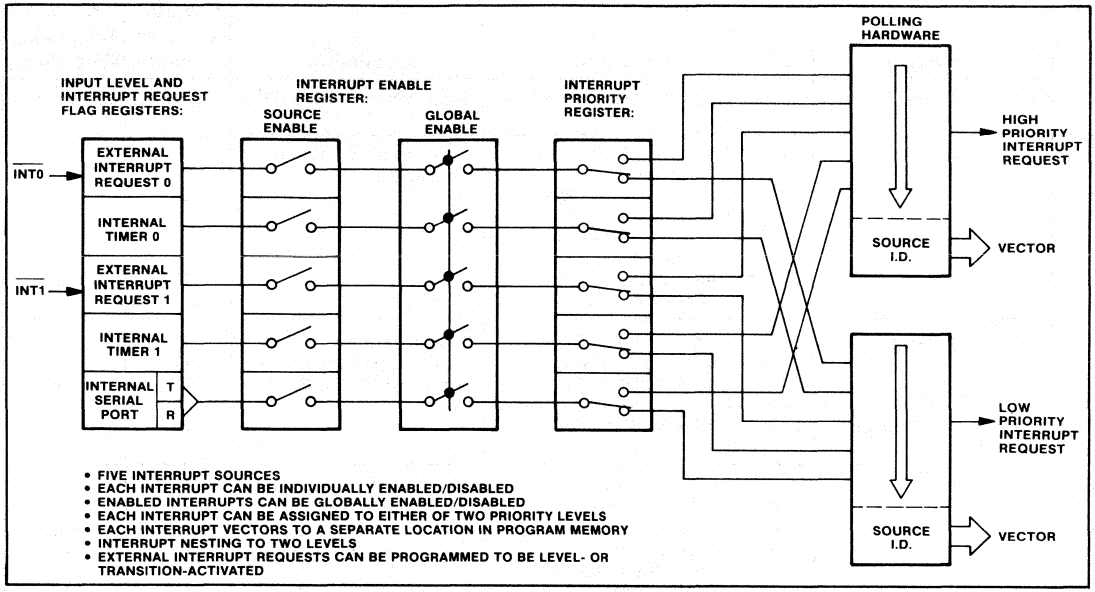

Figure 5. 8051 Interrupt System

is configured as an input. The configuration of the ports is shown on the 8051 Family Logic Symbol of Figure 2.

Open Drain I/O Pins

Each pin of Port 0 can be configured as an open drain output or as a high impedance input. Resetting the microcomputer programs each pin as an input by writing a one (1) to the pin. If a zero (0) is later written to the pin it becomes configured as an output and will continuously sink current. Re-writing the pin to a one (1) will place its output driver in a high-impedance state and configure the pin as an input. Each I/O pin of Port 0 can sink two TTL loads.

Quasi-Bidirectional I/O Pins

Ports 1, 2 and 3 are quasi-bidirectional buffers. Resetting the microcomputer programs each pin as an input by writing a one (1) to the pin. If a zero (0) is later written to the pin it becomes configured as an output and will continuously sink current. Any pin that is configured as an output will be reconfigured as an input when a one (1) is written to the pin. Simultaneous to this reconfiguration the output driver of the quasi-bidirectional port will source current for two oscillator periods. Since current is sourced only when a bit previously written to a zero (0) is updated to a one (1), a pin programmed as an input will not source current into the TTL gate that is driving it if the pin is later written with another one (1). Since the quasi-bidirectional output driver sources current for only two oscillator periods, an internal pullup resistor of approximately 20K- to 40K-ohms is provided to hold the external driver's loading at a TTL high level. Ports 1, 2 and 3 can sink/source one TTL load.

Microprocessor Bus

A microprocessor bus is provided to permit the 8051 to solve a wide range of problems and to allow the upward growth of user products. This multiplexed address and data bus provides an interface compatible with standard memories, MCS-80 peripherals and the MCS-85 memories that include on-chip programmable I/O ports and timing functions. These are summarized in the 8051 Microcomputer Expansion Components chart of Figure 6.

When accessing external memory the high-order address is emitted on Port 2 and the low-order address on Port 0. The ALE signal is provided for strobing the address into an external latch. The program store enable ($\overline{PSEN}$) signal is provided for enabling an external memory device to Port 0 during a read from the Program Memory address space. When the MOVX instruction is executed Port 3 automatically generates the read ($\overline{RD}$) signal for enabling an External Data Memory device to Port 0 or generates the write ($\overline{WR}$) signal for strobing the external memory device with the data emitted by Port 0. Port 0 emits the address and data to the external memory through a push/pull driver that can sink/source two TTL loads. At the end of the read/write bus cycle Port 0 is automatically reprogrammed to its high

	Category	I.D.	Description	Comments	Program Or Data Memory	Crystal Frequency MHz (Max)
	I/O Expander		8 Line I/O Expander (Shift Register)	Low Cost I/O Expander		12
Compatible MCS-80/85 Components	Standard EPROMs	2758	1K x 8 450 ns Light Erasable	User programmable and erasable.	P	9
		2716-1	2K x 8 350 ns Light Erasable		P	11
		2732	4K x 8 450 ns Light Erasable		P	9
		2732A	4K x 8 250 ns Light Erasable		P	12
	Standard RAMs	2114A	1K x 4 100 ns RAM	Data memory can be easily expanded using standard NMOS RAMs.	D	12
		2148	1K x 4 70 ns RAM		D	12
		2142-2	1K x 4 200 ns RAM		D	12
	Multiplexed Address/ Data RAMs	8185A	1K x 8 300 ns RAM		D	12
	Standard I/O	8212	8-Bit I/O Port	Serves as Address Latch or I/O port.	D	12
		8282	8-Bit I/O Port		D	12
		8283	8-Bit I/O Port		D	12
		8255A	Programmable Peripheral Interface	Three 8-bit programmable I/O ports.	D	12
		8251A	Programmable Communications Interface	Serial Communications Receiver/Transmitter.	D	12
	Standard Peripherals	8205	1 of 8 Binary Decoder	MCS-80 and MCS-85 peripheral devices are compatible with the 8051 allowing easy addition of specialized interfaces. Future MCS-80/85 devices will also be compatible.	D	12
		8286	Bi-directional Bus Driver		D	12
		8287	Bi-directional Bus Driver (Inverting)		D	12
		8253A	Programmable Interval Timer		D	12
		8279	Programmable Keyboard/Display Interface (128 Keys)		D	12
		8291	GPIB Talker/Listener		D	12
		8292	GPIB Controller		D	11.7
	Universal Peripheral Interfaces	8041A	ROM Program Memory	User programmable to perform custom I/O and control functions.	D/P	12/11.7
		8741A	EPROM Program Memory		D/P	12/11.7
	Memories with on-chip I/O and Peripheral Functions.	8155-2	256 x 8 330 ns RAM		D	12
		8355-2	2K x 8 330 ns ROM		P	11.6
		8755-2	2K x 8 330 ns EPROM		P	11.6

Figure 6. 8051 Microcomputer Expansion Components

impedance state and Port 2 is returned to the state it had prior to the bus cycle. The 8051 generates the address, data and control signals needed by memory and I/O devices in a manner that minimizes the requirements placed on external program and data memories. At 12 MHz, the Program Memory cycle time is 500ns and the access times required from stable address and $\overline{PSEN}$ are approximately 320ns and 150ns respectively. The External Data Memory cycle time is 1μs and the access times required from stable address and from read ($\overline{RD}$) or write ($\overline{WR}$) command are approximately 600ns and 250ns respectively.

TIMER/EVENT COUNTERS

The 8051 contains two 16-bit counters for measuring time intervals, measuring pulse widths, counting events and generating precise, periodic interrupt requests. Each can be programmed independently to operate similar to an 8048 8-bit timer with divide by 32 prescaler or as an 8-bit counter with divide by 32 prescaler (Mode 0), as a 16-bit time-interval or event counter (Mode 1), or as an 8-bit time-interval or event counter with automatic reload upon overflow (Mode 2).

Additionally, counter 0 can be programmed to a mode that divides it into one 8-bit time-interval or

event counter and one 8-bit time-interval counter (Mode 3). When counter 0 is in Mode 3, counter 1 can be programmed to any of the three aforementioned modes, although it cannot set an interrupt request flag or generate an interrupt. This mode is useful because counter 1's overflow can be used to pulse the serial port's transmission-rate generator. Along with their multiple operating modes and 16-bit precision, the counters can also handle very high input frequencies. These range from 0.1 MHz to 1.0 MHz (for 1.2 MHz to 12 MHz crystal) when programmed for an input that is a division by 12 of the oscillator frequency and from 0 Hz to an upper limit of 50 KHz to 0.5 MHz (for 1.2 MHz to 12 MHz crystal) when programmed for external inputs. Both internal and external inputs can be gated to the counter by a second external source for directly measuring pulse widths.

The counters are started and stopped under software control. Each counter sets its interrupt request flag when it overflows from all ones to all zeros (or auto-reload value). The operating modes and input sources are summarized in Figures 7 and 8. The effects of the configuration flags and the status flags are shown in Figures 9 and 10.

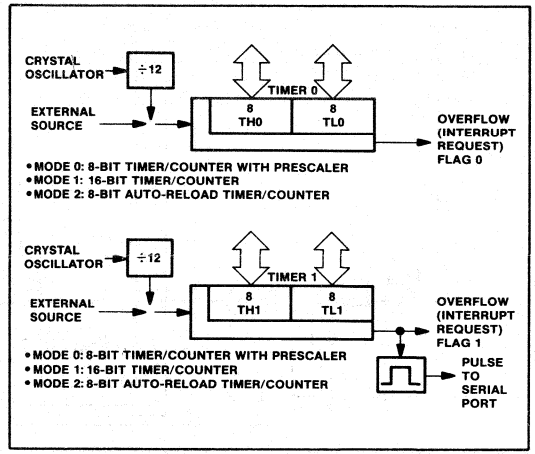

Figure 7. Timer/Event Counter Modes 0, 1 and 2

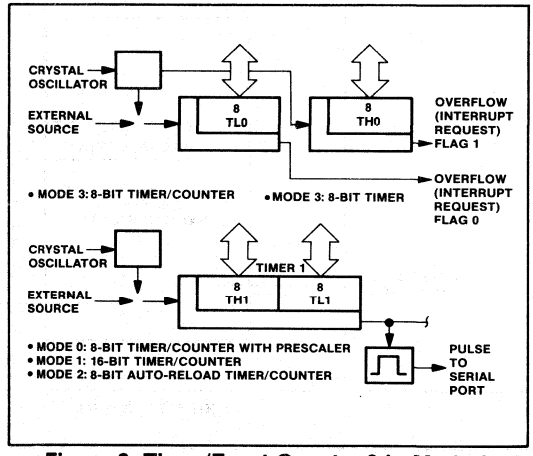

Figure 8. Timer/Event Counter 0 in Mode 3

SERIAL COMMUNICATIONS

The 8051 has a serial I/O port that is useful for serially linking peripheral devices as well as multiple 8051s through standard asynchronous protocols with full-duplex operation. The serial port also has a synchronous mode for expansion of I/O lines using CMOS and TTL shift registers. This hardware serial communications interface saves ROM code and permits a much higher transmission rate than could be achieved through software. In response to a serial port interrupt request the CPU has only to read/write the serial port's buffer to service the serial link. A block diagram of the serial port is shown in Figures 11 and 12. Methods for linking UART (universal asynchronous receiver/transmitter) devices are

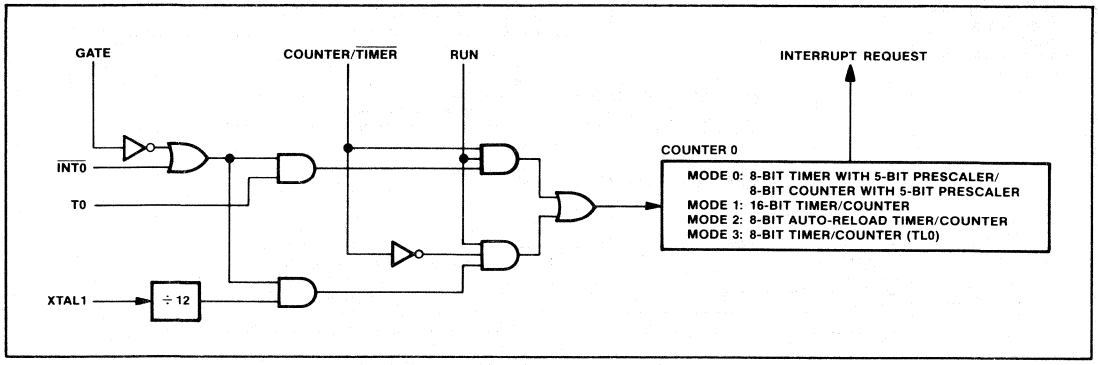

Figure 9. Timer/Counter 0 Control and Status Flag Circuitry

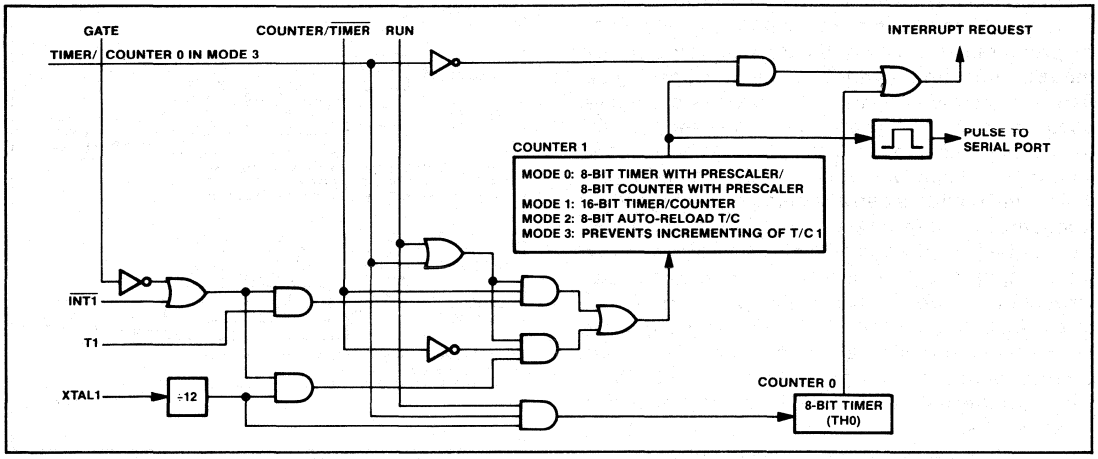

Figure 10. Timer/Counter 1 Control and Status Flag Circuitry

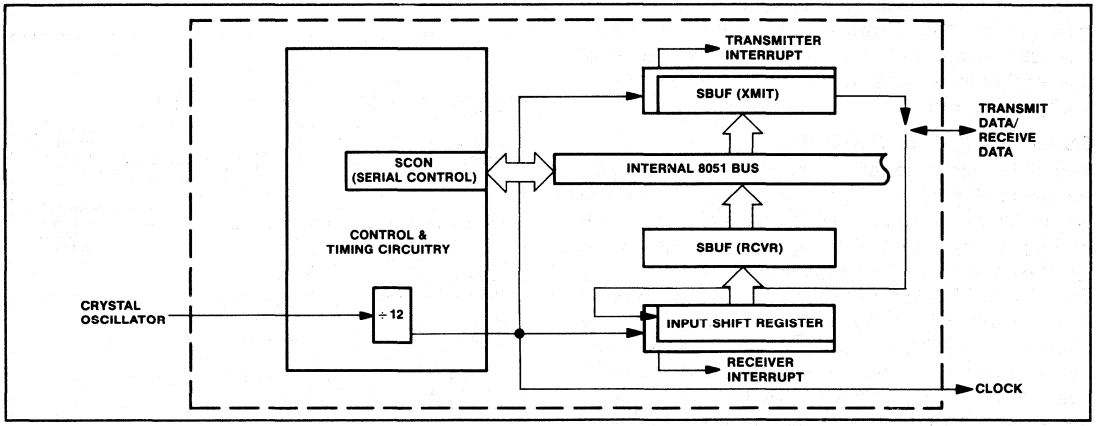

Figure 11. Serial Port—Synchronous Mode 0

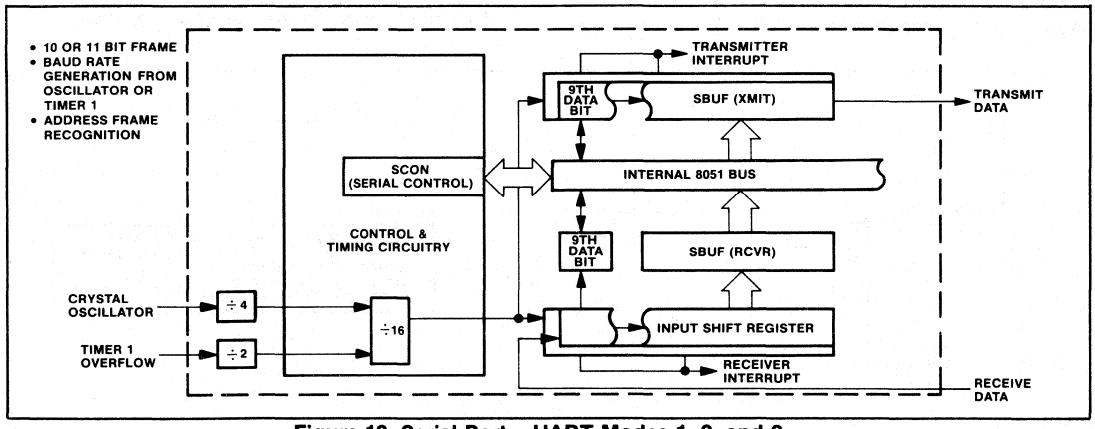

Figure 12. Serial Port—UART Modes 1, 2, and 3

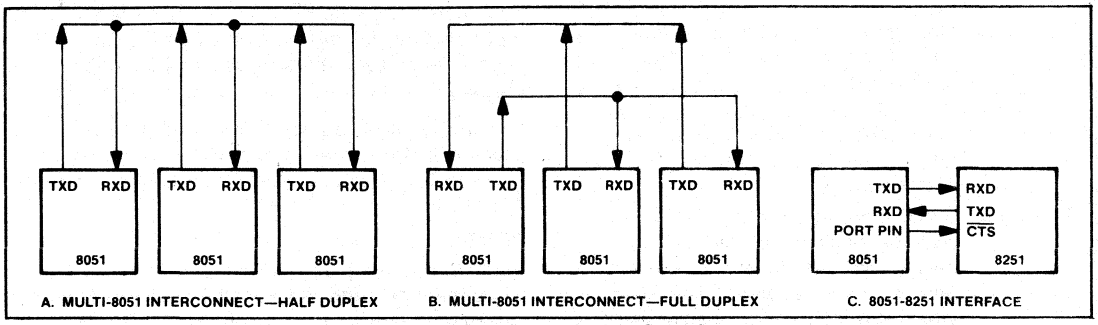

Figure 13. UART Interfacing Schemes

shown in Figure 13 and a method for I/O expansion is shown in Figure 14.

The full-duplex serial I/O port provides asynchronous modes to facilitate communications with standard UART devices, such as printers and CRT terminals, or communications with other 8051s in multi-processor systems. The receiver is double buffered to eliminate the overrun that would occur if the CPU failed to respond to the receiver's interrupt before the beginning of the next frame. Double buffering of the transmitter is not needed since the 8051 can generally maintain the serial link at its maximum rate without it. A minor degradation in transmission rate can occur in rare events such as when the servicing of the transmitter has to wait for a lengthy interrupt service program to complete. In asynchronous modes, false start-bit rejection is provided on received frames. For noise rejection a best two-out-of-three vote is taken on three samples near the center of each received bit.

When interfacing with standard UART devices the serial channel can be programmed to a mode (Mode 1) that transmits/receives a ten-bit frame or programmed to a mode (Mode 2 or 3) that transmits/receives an eleven-bit frame as shown in Figure 15. The frame consists of a start bit, eight or nine data bits and a stop bit. In Modes 1 and 3, the transmission-rate timing circuitry receives a pulse from counter 1 each time the counter overflows. The input to counter 1 can be an external source or a division by 12 of the oscillator frequency. The auto-reload mode of the counter provides communication rates of 122 to 31,250 bits per second (including start and stop bits) for a 12 MHz crystal. In Mode 2 the communication rate is a division by 64 of the oscillator frequency yielding a transmission rate of 187,500 bits per second (including start and stop bits) for a 12 MHz crystal.

Distributed processing offers a faster, more powerful system than can be provided by a single CPU processor. This results from a hierarchy of interconnected processors, each with its own memories and

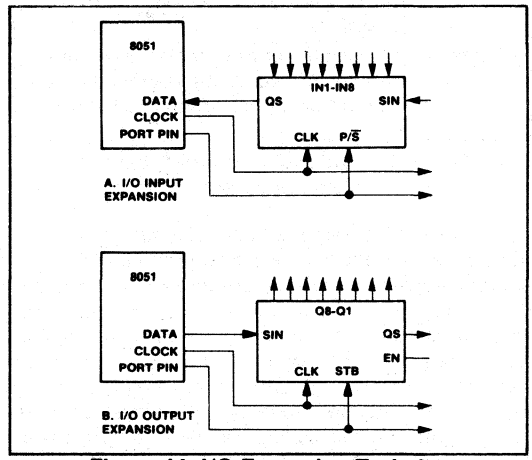

Figure 14. I/O Expansion Technique

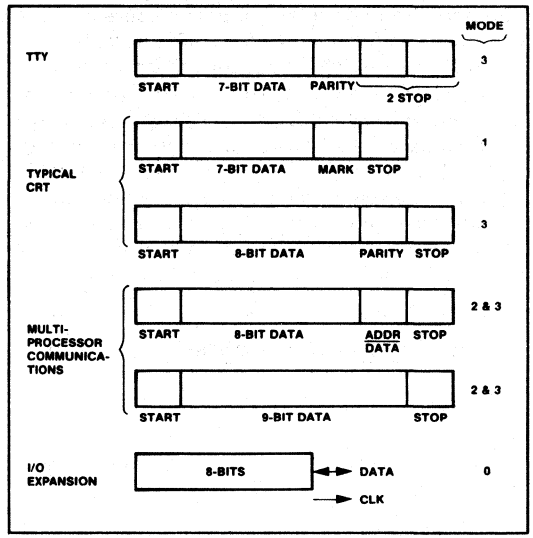

Figure 15. Typical Frame Formats

1. Slaves—Configure serial port to interrupt CPU if the received ninth data bit is a one (1).
2. Master—Transmit frame containing address in first 8 data bits and set ninth data bit (i.e. ninth data bit designates address frame).
3. Slaves—Serial port interrupts CPU when address frame is received. Interrupt service program compares received address to its address. The slave which has been addressed reconfigures its serial port to interrupt the CPU on all subsequent transmissions.
4. Master—Transmit control frames and data frames (these will be accepted only by the previously addressed slave).

Figure 16. Protocol for Multi-Processor Communications

I/O. In multiprocessing, a host 8051 microcomputer controls a multiplicity of 8051s configured to operate simultaneously on separate portions of the program, each controlling a portion of the overall process. The interconnected 8051s reduce the load on the host processor and result in a low-cost system of data transmission. This form of distributed processing is especially effective in systems where controls in a complex process are required at physically separated locations.

In Modes 2 and 3 the automatic wake-up of slave processors through interrupt driven address-frame recognition is provided to facilitate interprocessor communications. The protocol for interprocessor communications is shown in Figure 16.

In synchronous mode (Mode 0) the high speed serial port provides an efficient, low-cost method of expanding I/O lines using standard TTL and CMOS shift registers. The serial channel provides a clock output for synchronizing the shifting of bits to/from an external register. The data rate is a division by 12 of the oscillator frequency and is 1M bits per second at 12 MHz.

8051 Family Pin Description

V_{SS}
Circuit ground potential.

V_{CC}
+5V power supply during operation, programming and verification.

PORT 0

Port 0 is an 8-bit open drain bidirectional I/O port. It is also the multiplexed low-order address and data bus when using external memory. It is used for data input and output during programming and verification. Port 0 can sink/source two TTL loads.

PORT 1

Port 1 is an 8-bit quasi-bidirectional I/O port. It is used for the low-order address byte during programming and verification. Port 1 can sink/source one TTL load.

PORT 2

Port 2 is an 8-bit quasi-bidirectional I/O port. It also emits the high-order address byte when accessing external memory. It is used for the high-order address and the control signals during programming and verification. Port 2 can sink/source one TTL load.

PORT 3

Port 3 is an 8-bit quasi-bidirectional I/O port. It also contains the interrupt, timer, serial port and $\overline{RD}$ and $\overline{WR}$ pins that are used by various options. The output latch corresponding to a secondary function must be programmed to a one (1) for that function to operate. Port 3 can sink/source one TTL load. The secondary functions are assigned to the pins of Port 3, as follows:

- RXD/data (P3.0). Serial port's receiver data input (asynchronous) or data input/output (synchronous).
- TXD/clock (P3.1). Serial port's transmitter data output (asynchronous) or clock output (synchronous).
- $\overline{INT0}$ (P3.2). Interrupt 0 input or gate control input for counter 0.
- $\overline{INT1}$ (P3.3). Interrupt 1 input or gate control input for counter 1.
- T0 (P3.4). Input to counter 0.
- T1 (P3.5). Input to counter 1.
- $\overline{WR}$ (P3.6). The write control signal latches the data byte from Port 0 into the External Data Memory.
- $\overline{RD}$ (P3.7). The read control signal enables External Data Memory to Port 0.

RST/V_{PD}

A low to high transition on this pin (at approximately 3V) resets the 8051. If V_{PD} is held within its spec (approximately +5V), while V_{CC} drops below spec, V_{PD} will provide standby power to the RAM. When V_{PD} is low, the RAM's current is drawn from V_{CC}. A small internal resistor permits power-on reset using only a capacitor connected to V_{CC}.

ALE/$\overline{PROG}$

Provides Address Latch Enable output used for latching the address into external memory during normal operation. Receives the program pulse

input during EPROM programming.

PSEN

The Program Store Enable output is a control signal that enables the external Program Memory to the bus during normal fetch operations.

$\overline{EA}$/VDD

When held at a TTL high level, the 8051 executes instructions from the internal ROM/EPROM when the PC is less than 4096. When held at a TTL low level, the 8051 fetches all instuctions from external Program Memory. The pin also receives the 21V EPROM programming supply voltage.

XTAL1

Input to the oscillator's high gain amplifier. A crystal or external source can be used.

XTAL2

Output from the oscillator's amplifier. Required when a crystal is used.

8051 FAMILY DEVELOPMENT SYSTEM AND SOFTWARE SUPPORT

The 8051 is supported by a total range of Intel development tools. This broad range of support shortens the product development cycle and thus brings the product to market sooner.

- ASM51 Absolute macro assembler for the 8051.
- CONV51 8048 assembly language source code to 8051 assembly source code conversion program.
- EM-51 8051/8751 emulator board that uses a modified 8051 and an EPROM.
- ICE-51™ Real-time in-circuit emulator.
- SDK-51 System design kit for developing user Prototype around the 8051.
- UPP-551 8751 personality card for UPP-103 Universal PROM Programmer.
- 8051 Workshop.

8051 Software Development Package (ASM51 and CONV51)

The 8051 software development package provides development system support for the powerful 8051 family of single-chip microcomputers. The package contains a symbolic macro assembler and a 8048 to 8051 source code converter. This diskette-based software package runs under ISIS-II on any Intellec® Microcomputer Development System with 64K bytes of memory.

8051 Macro Assembler (ASM51)

The 8051 macro assembler translates symbolic 8051 assembly language instructions into machine executable object code. These assembly language mnemonics are easier to program and are more readable than binary or hexidecimal machine instructions. Also, by allowing the programmer to give symbolic names to memory locations rather than absolute addresses, software design and debug are performed more quickly and reliably.

ASM51 provides symbolic access for the many useful addressing methods in the 8051 architecture which reference bit, nibble and byte locations.

The assembler supports macro definitions and calls. This provides a convenient means of programming a frequently used code sequence only once. The assembler also provides conditional assembly capabilities. Cross referencing is provided in the symbol table listing, which shows the user the lines in which each symbol was defined and referenced.

If an 8051 program contains errors, the assembler provides a comprehensive set of error diagnostics, which are included in the assembly listing.

The object code generated may be used to program the 8751 EPROM version of the chip or sent to Intel for fabricating the 8051 ROM version. The assembler output can also be debugged using the ICE-51 in-circuit emulator.

8048 to 8051 Assembly Language Converter Utility Program (CONV51)

The 8048 to 8051 assembly language converter is a utility to help users of the MCS-48 family of microcomputers upgrade their designs to the high performance 8051 architecture. By converting 8048 source code to 8051 source code, the investment in software developed for the 8048 is maintained when the system is upgraded.

8051 Emulation Board (EM-51)

The EM-51 8051 emulation board is a small (2.85" x 5.25") board which emulates an 8031/8051/8751 microcomputer using standard PROMs or EPROMs in place of the 8051's on-chip program memory. The board includes a modified 8051 microcomputer, supporting circuits, and two sockets for program memory. The user may select two 2716 EPROMs, a 2732 EPROM, or two 3636 bipolar PROMs depending on crystal frequency and power requirements.

8051 In-Circuit Emulator (ICE-51™)

The 8051 In-Circuit Emulator resides in the Intellec development system. The development system interfaces with the user's 8051 system through an in-cable buffer box with the cable terminating in an 8051 pin-compatible plug. Together these replace the 8051 device in the system. With the emulator plug in place, the designer can exercise the system in real-time while collecting up to 255 instruction

cycles of real-time data. In addition, he can single step the system program.

Static RAM memory is available in the ICE-51 buffer box to emulate the 8051's internal and external program memories and external data memory. The designer can display and alter the contents of the replacement memory in the ICE-51 buffer box, internal 8051 registers, internal data RAM, and Special Function Registers. Symbolic reference capability allows the designer to use meaningful symbols provided by ASM51 rather than absolute values when examining and modifying these memory, register, flag, and I/O locations in his system.

Personality Card for Universal PROM Programmer (UPP-551)

The UPP-551 is a personality card for the UPP-103 Universal PROM Programmer. The Universal PROM Programmer is an Intellec system peripheral capable of programming and verifying the 8751 when the UPP-551 is inserted. Programming and verfication operations are initiated from the Intellec development system console and are controlled by the Universal PROM Mapper (UPM) program.

8051 Workshop

The workshop provides the design engineer or system designer hands-on experience with the 8051 microcomputers. The course includes explanation of the Intel 8051 architecture, system timing and input/output design. Lab sessions will allow the attendee to gain detailed familiarity with the 8051 family and support tools.

INSITE™ Library

The INSITE Library contains 8051 utilities and applications programs.

ABSOLUTE MAXIMUM RATINGS*

Ambient Temperature Under Bias ..... 0°C to 70°C
Storage Temperature ..... -65°C to +150°C
Voltage on Any Pin With
Respect to Ground (V_{SS}) ..... -0.5V to +7V
Power Dissipation ..... 2 Watts

NOTICE: Stresses above those listed under "Absolute Maximum Ratings" may cause permanent damage to the device. This is a stress rating only and functional operation of the device at these or any other conditions above those indicated in the operational sections of this specification is not implied. Exposure to absolute maximum rating conditions for extended periods may affect device reliability.

D.C. CHARACTERISTICS (T_A = 0°C to 70°C; V_{CC} = 5V ± 5%; V_{SS} = 0V)

Symbol	Parameter	Min	Typ	Max	Units	Test Conditions
V_{IL}	Input Low Voltage (All except XTAL1)	-0.5		0.8	V	
V_{IL1}	Input Low Voltage (XTAL1)	-0.5		TBD	V	
V_{IH}	Input High Voltage (All Except XTAL1, RST/V_{PD})	2.0		V_{CC}+0.5	V	
V_{IH1}	Input High Voltage (XTAL1)	TBD		V_{CC}+0.5	V	
V_{IH2}	Input High Voltage (RST)	3.0		V_{CC} + 0.5	V	
V_{IH3}	Input High Voltage (V_{PD})	4.5		5.5	V	Power Down Only (V_{CC} = 0)
V_{OL}	Output Low Voltage (All Outputs Except Port 0)			0.45	V	I_{OL}=2 mA
V_{OL1}	Output Low Voltage (Port 0)			0.45	V	I_{OL}=4 mA
V_{OH}	Output High Voltage (All Outputs Except Port 0, ALE and $\overline{PSEN}$)	2.4			V	I_{OH}=-100 μA
V_{OH1}	Output High Voltage (ALE and $\overline{PSEN}$, Port 0 in External Bus Mode)	2.4			V	I_{OH}=-400 μA
I_{LO}	Pullup Resistor Current (P1, P2, P3)			500	μA	.45V≤ V_{IN} ≤V_{CC}
I_{LO1}	Output Leakage Current (P0)			±10	μA	.45V≤ V_{IN} ≤V_{CC}
I_{CC}	Power Supply Current (All Outputs Disconnected)			150	mA	T_A=25°C
I_{PD}	Power Down Supply Current			20	mA	T_A=25°C, V_{PD}=5V, V_{CC}=0V
C_{IO}	Capacitance Of I/O Buffer			10	pF	fc=1MHz

AFN-01462B-11

A.C. CHARACTERISTICS (T_A = 0°C to 70°C; V_{CC} = 5V ± 5%; V_{SS} = 0V; C_L for Port 0, ALE and $\overline{PSEN}$ Outputs = 150 pF; C_L for All Other Outputs = 80 pF)

Program Memory Characteristics

Symbol	Parameter	12 MHz Clock			Variable Clock 1/TCLCL=1.2 MHz to 12 MHz		
		Min	Max	Units	Min	Max	Units
TCLCL	Oscillator Period	83		ns			ns
TCY	Min Instruction Cycle Time	1.0		μs	12TCLCL	12TCLCL	ns
TLHLL	ALE Pulse Width	140		ns	2TCLCL-30		ns
TAVLL	Address Set Up To ALE	60		ns	TCLCL-25		ns
TLLAX	Address Hold After ALE	50		ns	TCLCL-35		ns
TPLPH	$\overline{PSEN}$ Width	230		ns	3TCLCL-20		ns
TLHLH	$\overline{PSEN}$, ALE Cycle Time	500		ns	6TCLCL		ns
TPLIV	$\overline{PSEN}$ To Valid Instruction In		150	ns		3TCLCL-100	ns
TPHDX	Input Data Hold After $\overline{PSEN}$	0		ns	0		ns
TPHDZ	Input Data Float After $\overline{PSEN}$		75	ns		TCLCL-10	ns
TAVIV	Address To Valid Instr In		320	ns		5TCLCL-100	ns
TAZPL	Address Float To $\overline{PSEN}$	0		ns	0		ns

External Data Memory Characteristics

Symbol	Parameter	12 MHz Clock			Variable Clock		
		Min	Max	Units	Min	Max	Units
TRLRH	$\overline{RD}$ Pulse Width	400		ns	6TCLCL-100		ns
TWLWH	$\overline{WR}$ Pulse Width	400		ns	6TCLCL-100		ns
TRLDV	$\overline{RD}$ To Valid Data In		250	ns		5TCLCL-170	ns
TRHDX	Data Hold After $\overline{RD}$	0		ns	0		ns
TRHDZ	Data Float After $\overline{RD}$		100	ns		2TCLCL-70	ns
TAVDV	Address To Valid Data In		600	ns		9TCLCL-150	ns
TAVWL	Address To $\overline{WR}$ or $\overline{RD}$	200		ns	4TCLCL-130		ns
TDVWX	Data Valid To $\overline{WR}$ Transition			ns			ns
TQVWH	Data Setup Before $\overline{WR}$	400		ns	7TCLCL-180		ns
TWHQX	Data Held After $\overline{WR}$	80		ns	2TCLCL-90		ns

NOTE:
There are 2 to 8 ALE cycles per instruction. Clocks and state timing are shown on the timing diagram for reference purposes only. They are not accessible outside the package. TCY is the minimum instruction cycle time which consists of 12 oscillator clocks or two ALE cycles. Address setup and hold time from ALE are the same for data and program memory.

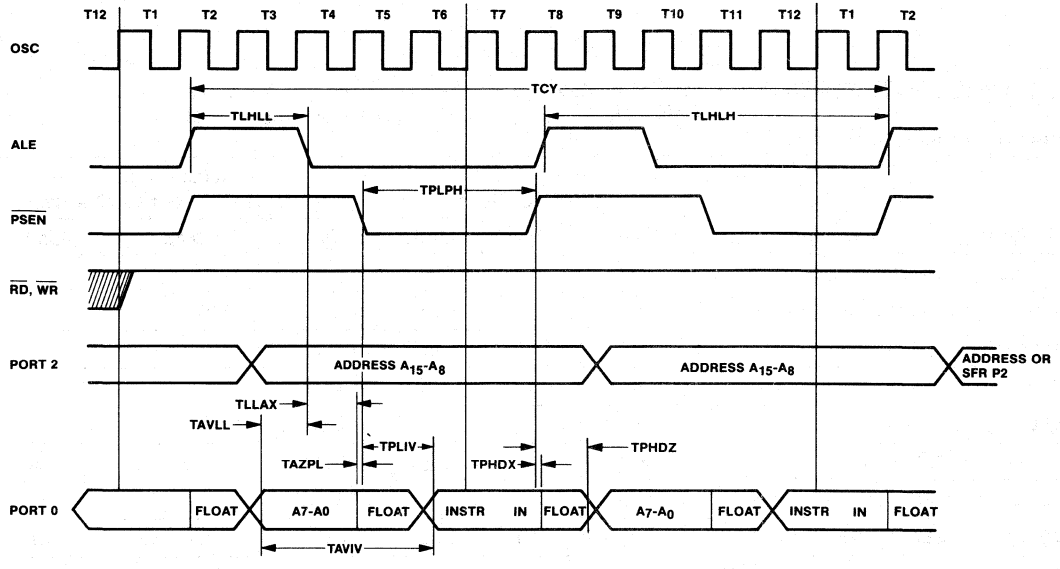

Program Memory Read Cycle

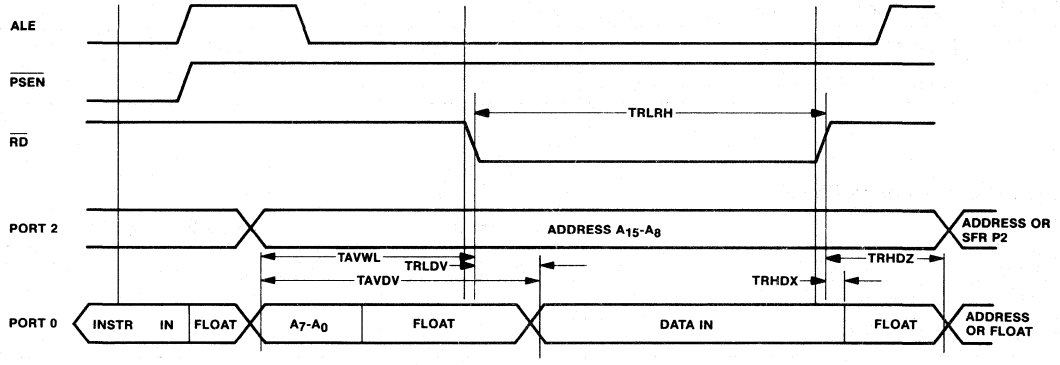

Data Memory Read Cycle

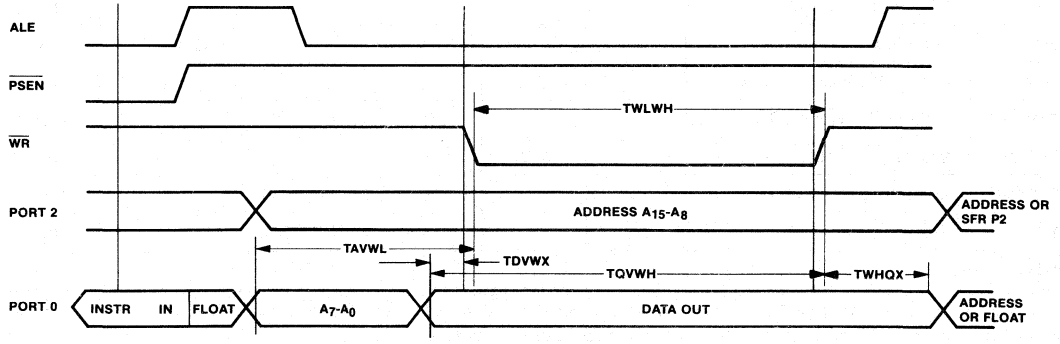

Data Memory Write Cycle

Table 1. 8051 Instruction Set Summary

Notes on instruction set and addressing modes:

Rn	—Register R7-R0 of the currently selected Register Bank.
data	—8-bit internal data location's address. This could be an Internal Data Ram location (0-127) or a SFR (i.e. I/O port, control register, status register, etc. (128-255).
@Ri	—8-bit Internal Data RAM location (0-255) addressed indirectly through register R1 or R0.
#data	—8-bit constant included in instruction.
#data16	—16-bit constant included in instruction.
addr16	—16-bit destination address. Used by LCALL & LJMP. A branch can be anywhere within the 64K-byte Program Memory address space.
addr11	—11-bit destination address. Used by ACALL & AJMP. The branch will be within the same 2K-byte page of program memory as the first byte of the following instruction.
rel	—Signed (two's complement) 8-bit offset byte. Used by SJMP and all conditional jumps. Range is -128 to +127 bytes relative to first byte of the following instruction.
bit	—Direct Addressed bit in Internal Data RAM or Special Function Register.
*	—New operation not provided by 8048/8049.

Interrupt Response Time: To finish execution of current instruction, respond to the interrupt request, push the PC and to vector to the first instruction of the interrupt service program requires 38 to 81 oscillator periods (3 to 7 μs @12MHz).

INSTRUCTIONS THAT AFFECT FLAG SETTINGS[1]

INSTRUCTION	FLAG C	OV	AC	INSTRUCTION	FLAG C	OV	AC
ADD	X	X	X	CLR C	O		
ADDC	X	X	X	CPL C	X		
SUBB	X	X	X	ANL C, bit	X		
MUL	O	X		ANL C,/bit	X		
DIV	O	X		ORL C, bit	X		
DA	X			ORL C,/bit	X		
RRC	X			MOV C, bit	X		
RLC	X			CJNE	X		
SETB C	1						

[1]Note that operations on SFR byte address 208 or bit addresses 209-215 (i.e. the PSW or bits in the PSW) will also affect flag settings.

Data Transfer

Mnemonic	Description	Bytes	Oscillator Periods
MOV A,Rn	Move register to A	1	12
*MOV A,data	Move direct byte to A	2	12
MOV A,@Ri	Move indirect RAM to A	1	12
MOV A,#data	Move immediate data to A	2	12
MOV Rn,A	Move A to register	1	12
*MOV Rn,data	Move direct byte to register	2	24
MOV Rn,#data	Move immediate data to register	2	12
*MOV data,A	Move A to direct byte	2	12
*MOV data,Rn	Move register to direct byte	2	24
*MOV data,data	Move direct byte to direct byte	3	24
*MOV data,@Ri	Move indirect RAM to direct byte	2	24
*MOV data,#data	Move immediate data to direct byte	3	24
MOV @Ri,A	Move A to indirect RAM	1	12
*MOV @Ri,data	Move direct byte to indirect RAM	2	24
MOV @Ri,#data	Move immediate data to indirect RAM	2	12
*MOV DPTR, #data16	Move 16-bit constant to Data Pointer	3	24
*MOV C,bit	Move direct bit to carry	2	12
*MOV bit,C	Move carry to direct bit	2	24
*MOVC A,@A+ DPTR	Move Program Memory byte addressed by A+DPTR to A	1	24
*MOVC A,@A+PC	Move Program Memory byte addressed by A+PC to A	1	24
MOVX A,@Ri	Move External Data (8-bit address) to A	1	24
*MOVX A,@DPTR	Move External Data (16-bit address) to A	1	24
MOVX @Ri,A	Move A to External Data (8-bit address)	1	24
*MOVX @DPTR,A	Move A to External Data (16-bit address)	1	24
*PUSH data	Move direct byte to stack and inc. SP	2	24
*POP data	Move direct byte from stack and dec. SP	2	24
XCH A,Rn	Exchange register with A	1	12
*XCH A,data	Exchange direct byte with A	2	12
XCH A,@Ri	Exchange indirect RAM with A	1	12
XCHD A,@Ri	Exchange indirect RAM's least sig nibble with A's LSN	1	12

Logic

Mnemonic	Description	Bytes	Oscillator Periods
ANL A,Rn	AND register to A	1	12
*ANL A,data	AND direct byte to A	2	12
ANL A,@Ri	AND indirect RAM to A	1	12
ANL A,#data	AND immediate data to A	2	12
*ANL data,A	AND A to direct byte	2	12
*ANL data,#data	AND immediate data to direct byte	3	24
*ANL C,bit	AND direct bit to carry	2	24
*ANL C,/bit	AND complement of direct bit to carry	2	24
ORL A,Rn	OR register to A	1	12
*ORL A,data	OR direct byte to A	2	12
ORL A,@Ri	OR indirect RAM to A	1	12
ORL A,#data	OR immediate data to A	2	12
*ORL data,A	OR A to direct byte	2	12
*ORL data,#data	OR immediate data to direct byte	3	24
*ORL C,bit	OR direct bit to carry	2	24
*ORL C,/bit	OR complement of direct bit to carry	2	24
XRL A,Rn	Exclusive-OR register to A	1	12
*XRL A,data	Exclusive-OR direct byte to A	2	12
XRL A,@Ri	Exclusive-OR indirect RAM to A	1	12
XRL A,#data	Exclusive-OR immediate data to A	2	12
*XRL data,A	Exclusive-OR A to direct byte	2	12
*XRL data,#data	Exclusive-OR immediate data to direct byte	3	24
*SETB C	Set carry	1	12
*SETB bit	Set direct bit	2	12
CLR A	Clear A	1	12
CLR C	Clear carry	1	12
*CLR bit	Clear direct bit	2	12
CPL A	Complement A	1	12
CPL C	Complement carry	1	12
*CPL bit	Complement direct bit	2	12
RL A	Rotate A Left	1	12
RLC A	Rotate A Left through carry	1	12
RR A	Rotate A Right	1	12
RRC A	Rotate A Right through carry	1	12
SWAP A	Rotate A left four (exchange nibbles within A)	1	12

All mnemonics copyrighted© Intel Corporation 1980.

Arithmetic

Mnemonic	Description	Bytes	Oscillator Periods
ADD A,Rn	Add register to A	1	12
*ADD A,data	Add direct byte to A	2	12
ADD A,@Ri	Add indirect RAM to A	1	12
ADD A,#data	Add immediate data to A	2	12
ADDC A,Rn	Add register and carry flag to A	1	12
*ADDC A,data	Add direct byte and carry flag to A	2	12
ADDC A,@Ri	Add indirect RAM and carry flag to A	1	12
ADDC A,#data	Add immediate data and carry flag to A	2	12
*SUBB A,Rn	Subtract register and carry flag from A	1	12
*SUBB A,data	Subtract direct byte and carry flag from A	2	12
*SUBB A,@Ri	Subtract indirect RAM and carry flag from A	1	12
*SUBB A,#data	Subtract immediate data and carry flag from A	2	12
INC A	Increment A	1	12
INC Rn	Increment register	1	12
*INC data	Increment direct byte	2	12
INC @Ri	Increment indirect RAM	1	12
DEC A	Decrement A	1	12
DEC Rn	Decrement register	1	12
*DEC data	Decrement direct byte	2	12
*DEC @Ri	Decrement indirect RAM	1	12
*INC DPTR	Increment Data Pointer	1	24
*MUL AB	Multiply A times B	1	48
*DIV AB	Divide A by B	1	48
DA A	Decimal add Adjust of A	1	12

Other

Mnemonic	Description	Bytes	Oscillator Periods
NOP	No Operation	1	12

Control Transfer (Branch)

Mnemonic	Description	Bytes	Oscillator Periods
AJMP addr 11	Absolute Jump	2	24
*LJMP addr16	Long Jump	3	24
*SJMP rel	Short Jump	2	24
*JMP @A+DPTR	Jump indirect relative to the DPTR	1	24
JZ rel	Jump if A is zero	2	24
JNZ rel	Jump if A is not zero	2	24
JC rel	Jump if carry is set	2	24
JNC rel	Jump if carry is not set	2	24
*JB bit,rel	Jump relative if direct bit is set	3	24
*JNB bit,rel	Jump relative if direct bit is not set	3	24
*JBC bit,rel	Jump relative if direct bit is set, then clear bit	3	24
*CJNE A,data,rel	Compare direct byte to A & Jump if not Eq. See Note a.	3	24
*CJNE A,#data,rel	Compare immed. to A & Jump if not Eq. See Note a.	3	24
*CJNE Rn,#data, rel	Compare immed. to reg & Jump if not Eq. See Note a.	3	24
*CNJE @Ri, #data,rel	Compare immed. to indirect RAM & Jump if not Eq. See Note a.	3	24
DJNZ Rn,rel	Decrement register & Jump if not zero	2	24
*DJNZ data,rel	Decrement direct byte & Jump if not zero	3	24

Note a) Set C if the first operand is less than the second operand; else clear

Control Transfer (Subroutine)

Mnemonic	Description	Bytes	Oscillator Periods
ACALL addr11	Absolute Subroutine Call	2	24
LCALL addr16	Long Subroutine Call	3	24
RET	Return from Subroutine Call	1	24
RETI	Return from Interrupt Call	1	24

All mnemonics copyrighted© Intel Corporation 1980.

PRELIMINARY

8048H/8048H-1/8035HL/8035HL-1
HMOS SINGLE COMPONENT 8-BIT MICROCOMPUTER

- 8048H/8048H-1 Mask Programmable ROM
- 8035HL/8035HL-1 CPU Only with Power Down Mode

- 8-BIT CPU, ROM, RAM, I/O in Single Package
- High Performance HMOS
- Reduced Power Consumption
- 1.4 µsec and 1.9 µsec Cycle Versions All Instructions 1 or 2 Cycles
- Over 90 Instructions: 70% Single Byte
- 1K x 8 ROM 64 x RAM 27 I/O Lines
- Interval Timer/Event Counter
- Easily Expandable Memory and I/O
- Compatible with 8080/8085 Series Peripherals
- Two Single Level Interrupts

The Intel® 8048H/8048H-1/8035HL/8035HL-1 are totally self-sufficient, 8-bit parallel computers fabricated on single silicon chips using Intel's advanced N-channel silicon gate HMOS process.

The 8048H contains a 1K X 8 program memory, a 64 X 8 RAM data memory, 27 I/O lines, and an 8-bit timer/counter in addition to on-board oscillator and clock circuits. For systems that require extra capability the 8048H can be expanded using standard memories and MCS-80® /MCS-85® peripherals. The 8035HL is the equivalent of the 8048H without program memory and can be used with external ROM and RAM.

To reduce development problems to a minimum and provide maximum flexibility, a logically and functionally pin compatible version of the 8048H with UV-erasable user-programmable EPROM program memory is available. The 8748 will emulate the 8048H up to 6 MHz clock frequency with minor differences.

The 8048H is fully compatible with the 8048 when operated at 6MHz.

These microcomputers are designed to be efficient controllers as well as arithmetic processors. They have extensive bit handling capability as well as facilities for both binary and BCD arithmetic. Efficient use of program memory results from an instruction set consisting mostly of single byte instructions and no instructions over 2 bytes in length.

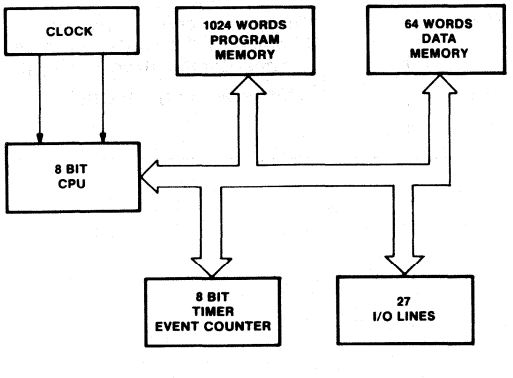

Figure 1.
Block Diagram

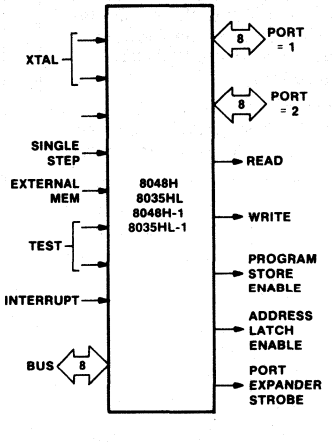

Figure 2.
Logic Symbol

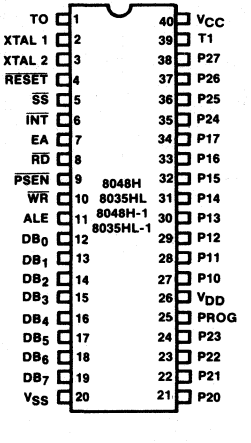

Figure 3. Pin Configuration (top view)

Intel Corporation Assumes No Responsibilty for the Use of Any Circuitry Other Than Circuitry Embodied in an Intel Product. No Other Circuit Patent Licenses are Implied.
©INTEL CORPORATION, 1980

AFN-01491B-01

Table 1. Pin Description

Symbol	Pin No.	Function
V_{SS}	20	Circuit GND potential
V_{DD}	26	Low power standby pin
V_{CC}	40	Main power supply; +5V during operation.
PROG	25	Output strobe for 8243 I/O expander.
P10-P17 Port 1	27-34	8-bit quasi-bidirectional port.
P20-P27 Port 2	21-24	8-bit quasi-bidirectional port.
	35-38	P20-P23 contain the four high order program counter bits during an external program memory fetch and serve as a 4-bit I/O expander bus for 8243.
DB0-DB7 BUS	12-19	True bidirectional port which can be written or read synchronously using the $\overline{RD}$, $\overline{WR}$ strobes. The port can also be statically latched.
		Contains the 8 low order program counter bits during an external program memory fetch, and receives the addressed instruction under the control of $\overline{PSEN}$. Also contains the address and data during an external RAM data store instruction, under control of ALE, $\overline{RD}$, and $\overline{WR}$.
T0	1	Input pin testable using the conditional transfer instructions JT0 and JNT0. T0 can be designated as a clock output using ENT0 CLK instruction.
T1	39	Input pin testable using the JT1, and JNT1 instructions. Can be designated the timer/counter input using the STRT CNT instruction.
$\overline{INT}$	6	Interrupt input. Initiates an interrupt if interrupt is enabled. Interrupt is disabled after a reset.
		Also testable with conditional jump instruction. (Active low)
$\overline{RD}$	8	Output strobe activated during a BUS read. Can be used to enable data onto the bus from an external device.
		Used as a read strobe to external data memory. (Active low)
$\overline{RESET}$	4	Input which is used to initialize the processor. (Active low) (Non TTL V_{IH})
$\overline{WR}$	10	Output strobe during a bus write. (Active low)
		Used as write strobe to external data memory.
ALE	11	Address latch enable. This signal occurs once during each cycle and is useful as a clock output.
		The negative edge of ALE strobes address into external data and program memory.
$\overline{PSEN}$	9	Program store enable. This output occurs only during a fetch to external program memory. (Active low)
$\overline{SS}$	5	Single step input can be used in conjunction with ALE to "single step" the processor through each instruction. (Active low)
EA	7	External access input which forces all program memory fetches to reference external memory. Useful for emulation and debug, and essential for testing and program verification. (Active high)
XTAL1	2	One side of crystal input for internal oscillator. Also input for external source. (Non TTL V_{IH})
XTAL2	3	Other side of crystal input.

AFN-01491B-02

Table 2. Instruction Set

Accumulator

Mnemonic	Description	Bytes	Cycles
ADD A, R	Add register to A	1	1
ADD A, @R	Add data memory to A	1	1
ADD A, # data	Add immediate to A	2	2
ADDC A, R	Add register with carry	1	1
ADDC A, @R	Add data memory with carry	1	1
ADDC A, # data	Add immediate with carry	2	2
ANL A, R	And register to A	1	1
ANL A, @R	And data memory to A	1	1
ANL A, # data	And immediate to A	2	2
ORL A, R	Or register to A	1	1
ORL A @R	Or data memory to A	1	1
ORL A, # data	Or immediate to A	2	2
XRL A, R	Exclusive or register to A	1	1
XRL A, @R	Exclusive or data memory to A	1	1
XRL, A, # data	Exclusive or immediate to A	2	2
INC A	Increment A	1	1
DEC A	Decrement A	1	1
CLR A	Clear A	1	1
CPL A	Complement A	1	1
DA A	Decimal adjust A	1	1
SWAP A	Swap nibbles of A	1	1
RL A	Rotate A left	1	1
RLC A	Rotate A left through carry	1	1
RR A	Rotate A right	1	1
RRC A	Rotate A right through carry	1	1

Input/Output

Mnemonic	Description	Bytes	Cycles
IN A, P	Input port to A	1	2
OUTL P, A	Output A to port	1	2
ANL P, # data	And immediate to port	2	2
ORL P, # data	Or immediate to port	2	2
INS A, BUS	Input BUS to A	1	2
OUTL BUS, A	Output A to BUS	1	2
ANL BUS, # data	And immediate to BUS	2	2
ORL BUS, # data	Or immediate to BUS	2	2
MOVD A,P	Input expander port to A	1	2
MOVD P, A	Output A to expander port	1	2
ANLD P, A	And A to expander port	1	2
ORLD P, A	Or A to expander port	1	2

Registers

Mnemonic	Description	Bytes	Cycles
INC R	Increment register	1	1
INC @R	Increment data memory	1	1
DEC R	Decrement register	1	1

Branch

Mnemonic	Description	Bytes	Cycles
JMP addr	Jump unconditional	2	2
JMPP @A	Jump indirect	1	2
DJNZ R, addr	Decrement register and skip	2	2
JC addr	Jump on carry = 1	2	2
JNC addr	Jump on carry = 0	2	2
JZ addr	Jump on A zero	2	2
JNZ addr	Jump on A not zero	2	2
JTO addr	Jump on TO = 1	2	2
JNTO addr	Jump on TO = 0	2	2
JT1 addr	Jump on T1 = 1	2	2
JNT1 addr	Jump on T1 = 0	2	2
JF0 addr	Jump on F0 = 1	2	2
JF1 addr	Jump on F1 = 1	2	2
JTF addr	Jump on timer flag	2	2
JN1 addr	Jump on INT = 0	2	2
JBb addr	Jump on accumulator bit	2	2

Subroutine

Mnemonic	Description	Bytes	Cycles
CALL addr	Jump to subroutine	2	2
RETR	Return	1	2
RETR	Return and restore status	1	2

Flags

Mnemonic	Description	Bytes	Cycles
CLR C	Clear carry	1	1
CPL C	Complement carry	1	1
CLR F0	CLear flag 0	1	1
CPL F0	Complement flag 0	1	1
CLR F1	Clear flag 1	1	1
CPL F1	Complement flag 1	1	1

Data Moves

Mnemonic	Description	Bytes	Cycles
MOV A, R	Move register to A	1	1
MOV A, @R	Move data memory to A	1	1
MOV A, # data	Move immediate to A	2	2
MOV R, A	Move A to register	1	1
MOV @R, A	Move A to data memory	1	1
MOV R, # data	Move immediate to register	2	2
MOV @R, #data	Move immediate to data memory	2	2
MOV A, PSW	Move PSW to A	1	1
MOV PSW, A	Move A to PSW	1	1
XCH A, R	Exchange A and register	1	1
XCH A, @R	Exchange A and data memory	1	1
XCHD A, @R	Exchange nibble of A and register	1	
MOVX A, @R	Move external data memory to A	1	2
MOVX @R, A	Move A to external data memory	1	2
MOVP A, @A	Move to A from current page	1	2
MOVP3 A, @	Move to A from page 3	1	2

Timer/Counter

Mnemonic	Description	Bytes	Cycles
MOV A, T	Read timer/counter	1	1
MOV T, A	Load timer/counter	1	1
STRT T	Start timer	1	1
STRT CNT	Start counter	1	1
STOP TCNT	Stop timer/counter	1	1
EN TCNT1	Enable timer/counter interrupt	1	1
DIS TCNT1	Disable timer/counter interrupt	1	1

Control

Mnemonic	Description	Bytes	Cycles
EN 1	Enable external interrupt	1	1
DIS 1	Disable external interrupt	1	1
SEL RB0	Select register bank 0	1	1
SEL RB1	Select register bank 1	1	1
SEL MB0	Select memory bank 0	1	1
SEL MB1	Select memory bank 1	1	1
ENT 0 CLK	Enable clock output on T0	1	1

Mnemonic	Description	Bytes	Cycles
NOP	No operation	1	1

AFN-01491B-03

ABSOLUTE MAXIMUM RATINGS*

Ambient Temperature Under Bias ..... 0°C to 70°C
Storage Temperature .....-65°C to +150°C
Voltage On Any Pin With Respect to Ground ..... -0.5V to +7V
Power Dissipation ..... 1.5 Watt

NOTICE: Stresses above those listed under "Absolute Maximum Ratings" may cause permanent damage to the device. This is a stress rating only and functional operation of device at these or any other conditions above those indicated in the operational sections of this specification is not implied.

D.C. CHARACTERISTICS (TA = 0°C to 70°C, V_{CC} = V_{DD} = 5V + 10%, V_{SS} = 0V)

Symbol	Parameter	Limits			Unit	Test Conditions
		Min	Typ	Max		
V_{IL}	Input Low Voltage (All Except $\overline{RESET}$, X1, X2)	-.5		.8	V	
V_{IL1}	Input Low Voltage ($\overline{RESET}$, X1, X2)	-.5		.6	V	
V_{IH}	Input High Voltage (All Except XTAL1, XTAL2, $\overline{RESET}$)	2.0		V_{CC}	V	
V_{IH1}	Input High Voltage (X1, X2, $\overline{RESET}$)	3.8		V_{CC}	V	
V_{OL}	Output Low Voltage (BUS)			.45	V	I_{OL} = 2.0 mA
V_{OL1}	Output Low Voltage ($\overline{RD}$, $\overline{WR}$, $\overline{PSEN}$, ALE)			.45	V	I_{OL} = 1.8 mA
V_{OL2}	Output Low Voltage (PROG)			.45	V	I_{OL} = 1.0 mA
V_{OL3}	Output Low Voltage (All Other Outputs)			.45	V	I_{OL} = 1.6 mA
VOH	Output High Voltage (BUS)	2.4			V	I_{OH} = -400μA
V_{OH1}	Output High Voltage ($\overline{RD}$, $\overline{WR}$, $\overline{PSEN}$, ALE)	2.4			V	I_{OH} = -100μA
V_{OH2}	Output High Voltage (All Other Outputs)	.2.4			V	I_{OH} = -40μA
I_{L1}	Input Leakage Current (T1, $\overline{INT}$)			±10	μA	$V_{SS} \leq V_{IN} \leq V_{CC}$
I_{LI1}	Input Leakage Current (P10-P17, P20-P27, EA, $\overline{SS}$)			-500	μA	V_{SS} + .45$\leq V_{IN} \leq V_{CC}$
I_{L0}	Output Leakage Current (BUS, TO) (High Impedance State)			±10	μA	V_{SS} + .45$\leq V_{IN} \leq V_{CC}$
I_{DD}	V_{DD} Supply Current		4	8	mA	
I_{DD} + I_{CC}	Total Supply Current		40	80	mA	
V_{DD}	RAM Standby Pin Voltage	2.2		5.5	V	Standby Mode, Reset ≤0.6V

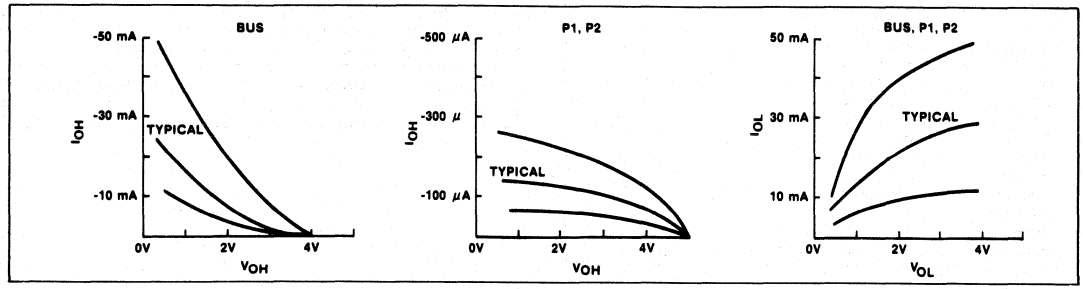

AFN-01491B-04

A.C. CHARACTERISTICS (T_A = 0°C to 70°C, V_{CC} = V_{DD} = 5V ± 10%, V_{SS} = 0V)

Symbol	Parameter	F (t_{CY})	8048H 8035HL 6 MHz Min	8048H 8035HL 6 MHz Max	8048H 8035HL 8 MHz Min	8048H 8035HL 8 MHz Max	8048H-1 8035HL-1 11 MHz Min	8048H-1 8035HL-1 11 MHz Max	Unit	Conditions (Note 1)
t_{LL}	ALE Pulse Width	7/30 t_{CY} -170	410		260		150			
t_{AL}	Addr Setup to ALE	1/5 t_{CY} -110	390		260		160			
t_{LA}	Addr Hold from ALE	1/15 t_{CY} -40	120		80		50			
t_{CC1}	Control Pulse Width ($\overline{RD}$, $\overline{WR}$)	1/2 t_{CY} -200	1050		730		480			
t_{CC2}	Control Pulse Width ($\overline{PSEN}$)	2/5 t_{CY} -200	800		550		350			
t_{DW}	Data Setup before $\overline{WR}$	13/30 t_{CY} -200	880		610		390			
t_{WD}	Data Hold after $\overline{WR}$	1/15 t_{CY} -50	350		220		40			(Note 2)
t_{DR}	Data Hold ($\overline{RD}$, $\overline{PSEN}$)	1/10 t_{CY} -30	0	220	0	160	0	110		
t_{RD1}	$\overline{RD}$ to Data in	2/5 t_{CY} -200		800		550		350		
t_{RD2}	$\overline{PSEN}$ to Data in	3/10 t_{CY} -200		550		360		210		
t_{AW}	Addr Setup to $\overline{WR}$	2/5 t_{CY} -150	850		600		300			
t_{AD1}	Addr Setup to Data ($\overline{RD}$)	23/30 t_{CY} -250		1670		1190		750		
t_{AD2}	Addr Setup to Data ($\overline{PSEN}$)	3/5 t_{CY} -250		1250		880		480		
t_{AFC1}	Addr Float to $\overline{RD}$, $\overline{WR}$	2/15 t_{CY} -40	290		210		140			
t_{AFC2}	Addr Float to $\overline{PSEN}$	1/30 t_{CY} -40	40		20		10			
t_{LAFC1}	ALE to Control ($\overline{RD}$, $\overline{WR}$)	1/5 t_{CY} -75	420		300		200			
t_{LAFC2}	ALE to Control ($\overline{PSEN}$)	1/10 t_{CY} -75	170		110		60			
t_{CA1}	Control to ALE ($\overline{RD}$, $\overline{WR}$, $\overline{PROG}$)	1/15 t_{CY} -40	120		80		50			
t_{CA2}	Control to ALE ($\overline{PSEN}$)	4/15 t_{CY} -40	620		460		320			
t_{CP}	Port Control Setup to $\overline{PROG}$	2/15 t_{CY} -80	210		140		100			
t_{PC}	Port Control Hold to $\overline{PROG}$	4/15 t_{CY} -200	460		300		700			
t_{PR}	$\overline{PROG}$ to P2 Input Valid	6/10 t_{CY} -120		1300		940		650		
t_{PF}	Input Data Hold from $\overline{PROG}$	1/10 t_{CY}		250	0	190	0	140		
t_{DP}	Output Data Setup	2/5 t_{CY} -150	850		600		400			
t_{PD}	Output Data Hold	1/10 t_{CY} -50	200		130		90			
t_{PP}	$\overline{PROG}$ Pulse Width	7/10 t_{CY} -250	1500		1060		700			
t_{PL}	Port 2 I/O Setup to ALE	4/15 t_{CY} -200	460		300		160			
t_{LP}	Port 2 I/O Hold to ALE	1/10 t_{CY} -100	150		80		40			
t_{PV}	Port Output from ALE	3/10 t_{CY} +100		850		660		510		
t_{CY}	Cycle Time		2.5		1.875		1.36			
t_{0PRR}	T0 Rep Rate	3/15 t_{CY}	500		370		270			

Notes:
1. Control Outputs CL = 80pF
   BUS Outputs CL = 150pF
2. BUS High Impedance Load 20pF

AFN-01491B-05

WAVEFORMS

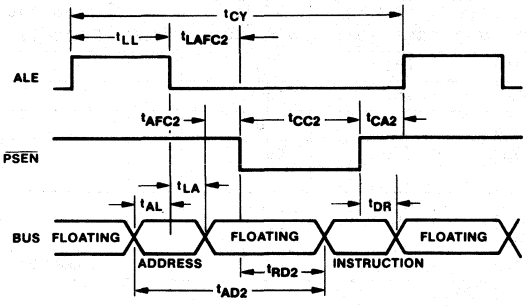

Instruction Fetch From External Program Memory

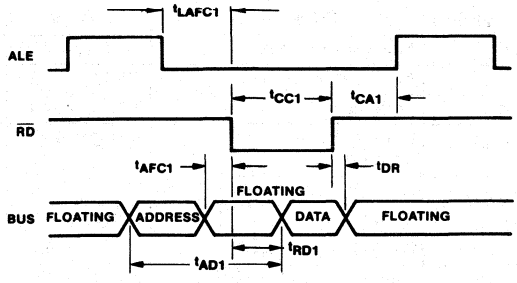

Read From External Data Memory

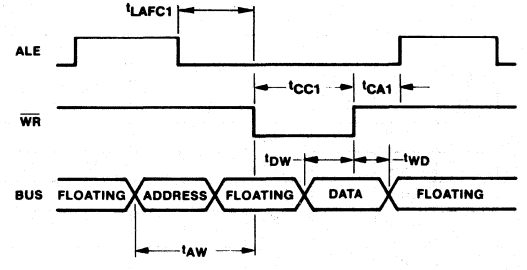

Write to External Data Memory

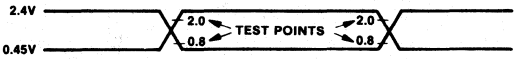

Input and Output for A.C.Tests

PORT 2 TIMING

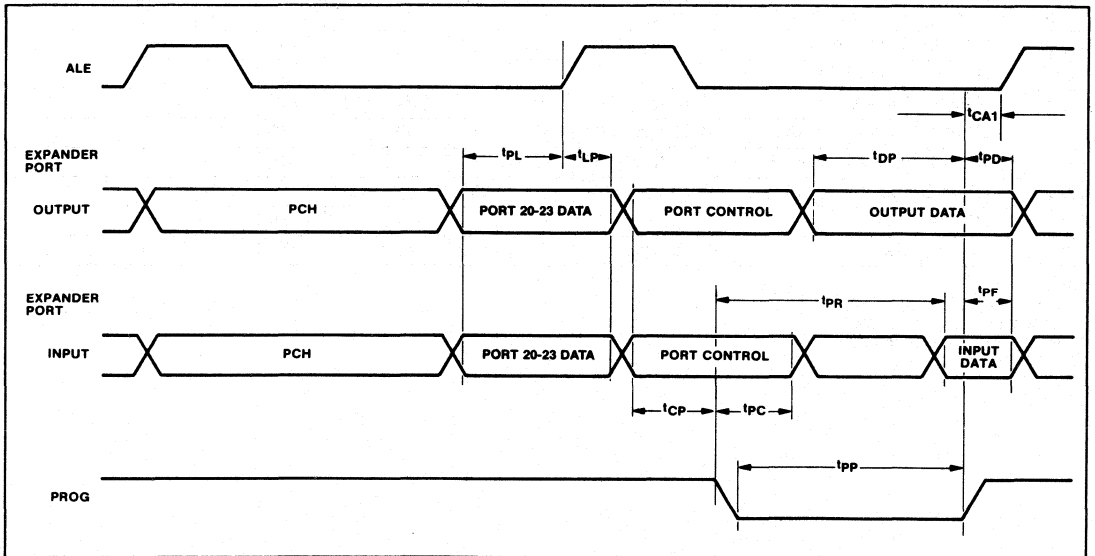

AFN-01491B-06

I/O PORT TIMING

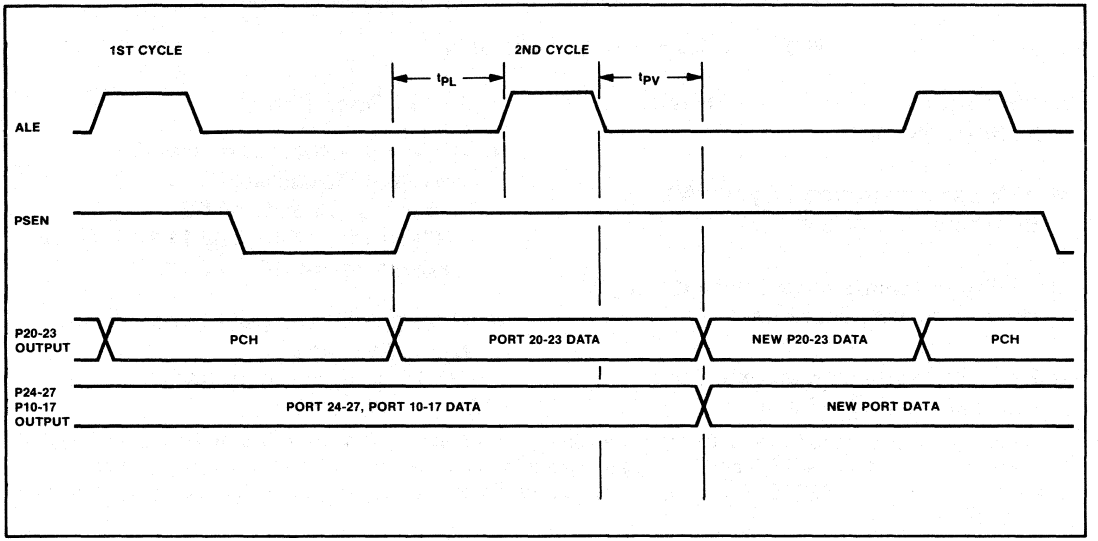

Crystal Oscillator Mode

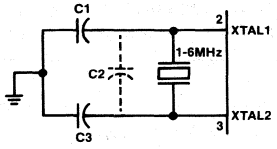

C1 = 5pF ± 1/2pF + STRAY < 5pF
C2 = CRYSTAL + STRAY < 8pF
C3 = 20pF ± 1pF + STRAY < 5pF

LC Oscillator Mode

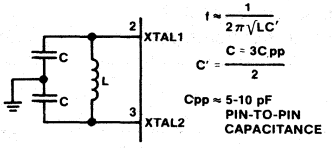

$$f \approx \frac{1}{2\pi\sqrt{LC'}}$$

$$C' = \frac{C + 3C_{pp}}{2}$$

$C_{pp} \approx$ 5-10 pF PIN-TO-PIN CAPACITANCE

L	C	NOMINAL f
45 μH	20pF	5.2 MHz
120 μH	20pF	3.2 MHz

EACH C SHOULD BE APPROXIMATELY 20pF, INCLUDING STRAY CAPACITANCE.

Driving From External Source

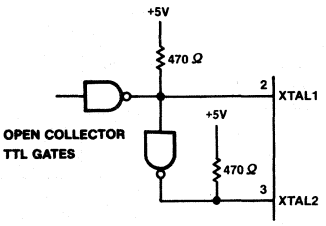

AFN-01491B-07

80C48/80C35
CHMOS SINGLE-COMPONENT 8-BIT MICROCOMPUTER

- **80C48 Low Power Mask Programmable ROM**
- **80C35 Low Power, CPU only**

- **Pin-to-pin compatible with Intel's 8048H/8035HL**
- **1.36 μsec Instruction Cycle. All instructions 1 or 2 cycles**
- **Ability to maintain operation during AC power line interruptions**
- **Exit Idle mode with an external or internal interrupt signal**
- **Battery Operation**
- **3 power consumption selections**
  - **—Normal Operation: 15 mA @ 11 MHz @ 6V**
  - **—Idle Mode: 500 μA @ 11 MHz @ 6V**
  - **—Power down: 10 μA @ 2.0V**
- **11 MHz, TTL compatible operation; V_{CC} = 5V ± 10%**
  CMOS compatible operation; V_{CC} = 5V ± 20%

Intel's 80C48/80C35 are low power, CHMOS versions of the popular MCS-48 HMOS family members. CHMOS is a technology built on HMOS II and features high resistivity P substrate, diffused N well, and scaled N and P channel devices. The 80C48/80C35 have been designed to provide low power consumption and high performance.

The 80C48 contains a 1K × 8 program memory, a 64 × 8 RAM data memory, 27 I/O lines, and an 8-bit timer/counter in addition to an on-board oscillator and clock circuits. For systems that require extra capability, the 80C48 can be expanded using CMOS external memories and MCS-80® and MCS-85® peripherals. The 80C35 is the equivalent of the 80C48 without program memory on-board.

The CHMOS design of the 80C48 opens new application areas that require battery operation, low power standby, wide voltage range, and the ability to maintain operation during AC power line interruptions. These applications include portable and hand-held instruments, telecommunications, consumer, and automotive.

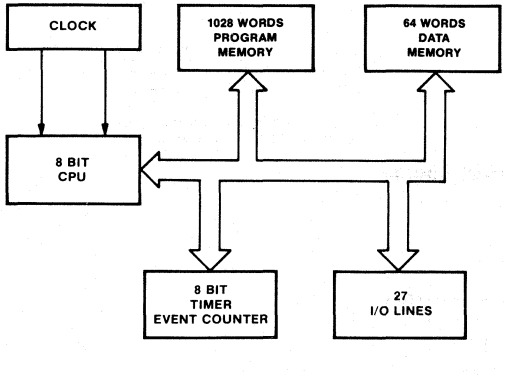

Figure 1. Block Diagram

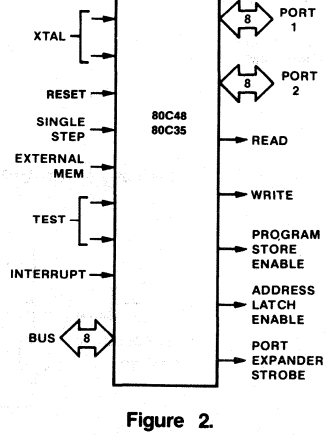

Figure 2. Logic Symbol

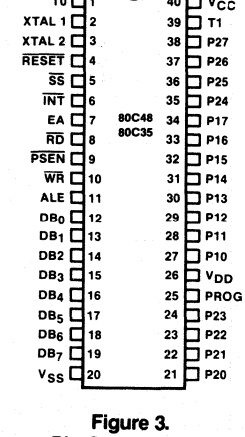

Figure 3. Pin Configuration

Table 1. Pin Description

Symbol	Pin No.	Function
V_{SS}	20	Circuit GND potential
V_{DD}	26	Low power standby pin
V_{CC}	40	Main power supply; +5V during operation.
PROG	25	Output strobe for 8243 I/O expander.
P10-P17 Port 1	27-34	8-bit quasi-bidirectional port.
P20-P27 Port 2	21-24 35-38	8-bit quasi-bidirectional port. P20-P23 contain the four high order program counter bits during an external program memory fetch and serve as a 4-bit I/O expander bus for 8243.
DB0-DB7 BUS	12-19	True bidirectional port which can be written or read synchronously using the $\overline{RD}$, $\overline{WR}$ strobes. The port can also be statically latched.
		Contains the 8 low order program counter bits during an external program memory fetch, and receives the addressed instruction under the control of $\overline{PSEN}$. Also contains the address and data during an external RAM data store instruction, under control of ALE, $\overline{RD}$, and $\overline{WR}$.
T0	1	Input pin testable using the conditional transfer instructions JT0 and JNT0. T0 can be designated as a clock output using ENT0 CLK instruction.
T1	39	Input pin testable using the JT1, and JNT1 instructions. Can be designated the timer/counter input using the STRT CNT instruction.
$\overline{INT}$	6	Interrupt input. Initiates an interrupt if interrupt is enabled. Interrupt is disabled after a reset. Also testable with conditional jump instruction. (Active low) Interrupt pin must remain low for at least 3 t_{cy} to ensure proper operation.

Symbol	Pin No.	Function
$\overline{RD}$	8	Output strobe activated during a BUS read. Can be used to enable data onto the bus from an external device.
		Used as a read strobe to external data memory. (Active low)
$\overline{RESET}$	4	Input which is used to initialize the processor. (Active low) (Non TTL V_{IH})
$\overline{WR}$	10	Output strobe during a bus write. (Active low)
		Used as write strobe to external data memory.
ALE	11	Address latch enable. This signal occurs once during each cycle and is useful as a clock output.
		The negative edge of ALE strobes address into external data and program memory.
$\overline{PSEN}$	9	Program store enable. This output occurs only during a fetch to external program memory. (Active low)
$\overline{SS}$	5	Single step input can be used in conjunction with ALE to "single step" the processor through each instruction. (Active low)
EA	7	External access input which forces all program memory fetches to reference external memory. Useful for emulation and debug, and essential for testing and program verification. (Active high)
XTAL1	2	One side of crystal input for internal oscillator. Also input for external source. (Non TTL V_{IH})
XTAL2	3	Other side of crystal input.

IDLE MODE DESCRIPTION

The 80C48, when placed into Idle mode, keeps the oscillator, the internal timer and the external interrupt and counter pins functioning and maintains the internal register and RAM status.

To place the 80C48 in Idle mode, a command instruction (op code 01H) is executed. To terminate Idle mode, interrupts must be enabled and an interrupt signal generated. There are two interrupt sources that can restore normal operation. One is an external signal applied to the interrupt pin. The other is from the overflow of the timer/counter. When either interrupt is invoked the CPU is taken out of Idle mode and vectors to the interrupt's service routine address. A reset signal will also take the processor out of Idle mode. Along with the Idle mode, the standard MCS-48 power-down mode is still maintained.

Table 2. Instruction Set

Accumulator

Mnemonic	Description	Bytes	Cycles
ADD A, R	Add register to A	1	1
ADD A, @R	Add data memory to A	1	1
ADD A, # data	Add immediate to A	2	2
ADDC A, R	Add register with carry	1	1
ADDC A, @R	Add data memory with carry	1	1
ADDC A, # data	Add immediate with carry	2	2
ANL A, R	And register to A	1	1
ANL A, @R	And data memory to A	1	1
ANL A, # data	And immediate to A	2	2
ORL A, R	Or register to A	1	1
ORL A @R	Or data memory to A	1	1
ORL A, # data	Or immediate to A	2	2
XRL A, R	Exclusive or register to A	1	1
XRL A, @R	Exclusive or data memory to A	1	1
XRL, A, # data	Exclusive or immediate to A	2	2
INC A	Increment A	1	1
DEC A	Decrement A	1	1
CLR A	Clear A	1	1
CPL A	Complement A	1	1
DA A	Decimal adjust A	1	1
SWAP A	Swap nibbles of A	1	1
RL A	Rotate A left	1	1
RLC A	Rotate A left through carry	1	1
RR A	Rotate A right	1	1
RRC A	Rotate A right through carry	1	1

Input/Output

Mnemonic	Description	Bytes	Cycles
IN A, P	Input port to A	1	2
OUTL P, A	Output A to port	1	2
ANL P, # data	And immediate to port	2	2
ORL P, # data	Or immediate to port	2	2
INS A, BUS	Input BUS to A	1	2
OUTL BUS, A	Output A to BUS	1	2
ANL BUS, # data	And immediate to BUS	2	2
ORL BUS, # data	Or immediate to BUS	2	2
MOVD A,P	Input expander port to A	1	2
MOVD P, A	Output A to expander port	1	2
ANLD P, A	And A to expander port	1	2
ORLD P, A	Or A to expander port	1	2

Registers

Mnemonic	Description	Bytes	Cycles
INC R	Increment register	1	1
INC @R	Increment data memory	1	1
DEC R	Decrement register	1	1

Branch

Mnemonic	Description	Bytes	Cycles
JMP addr	Jump unconditional	2	2
JMPP @A	Jump indirect	1	2
DJNZ R, addr	Decrement register and skip	2	2
JC addr	Jump on carry = 1	2	2
JNC addr	Jump on carry = 0	2	2
JZ addr	Jump on A zero	2	2
JNZ addr	Jump on A not zero	2	2
JTO addr	Jump on TO = 1	2	2
JNTO addr	Jump on TO = 0	2	2
JT1 addr	Jump on T1 = 1	2	2
JNT1 addr	Jump on T1 = 0	2	2
JF0 addr	Jump on F0 = 1	2	2
JF1 addr	Jump on F1 = 1	2	2
JTF addr	Jump on timer flag	2	2
JN1 addr	Jump on INT = 0	2	2
JBb addr	Jump on accumulator bit	2	2

Subroutine

Mnemonic	Description	Bytes	Cycles
CALL addr	Jump to subroutine	2	2
RETR	Return	1	2
RETR	Return and restore status	1	2

Flags

Mnemonic	Description	Bytes	Cycles
CLR C	Clear carry	1	1
CPL C	Complement carry	1	1
CLR F0	CLear flag 0	1	1
CPL F0	Complement flag 0	1	1
CLR F1	Clear flag 1	1	1
CPL F1	Complement flag 1	1	1

Data Moves

Mnemonic	Description	Bytes	Cycles
MOV A, R	Move register to A	1	1
MOV A, @R	Move data memory to A	1	1
MOV A, # data	Move immediate to A	2	2
MOV R, A	Move A to register	1	1
MOV @R, A	Move A to data memory	1	1
MOV R, # data	Move immediate to register	2	2
MOV @R, #data	Move immediate to data memory	2	2
MOV A, PSW	Move PSW to A	1	1
MOV PSW, A	Move A to PSW	1	1
XCH A, R	Exchange A and register	1	1
XCH A, @R	Exchange A and data memory	1	1
XCHD A, @R	Exchange nibble of A and register	1	1
MOVX A, @R	Move external data memory to A	1	2
MOVX @R, A	Move A to external data memory	1	2
MOVP A, @A	Move to A from current page	1	2
MOVP3 A, @	Move to A from page 3	1	2

Timer/Counter

Mnemonic	Description	Bytes	Cycles
MOV A, T	Read timer/counter	1	1
MOV T, A	Load timer/counter	1	1
STRT T	Start timer	1	1
STRT CNT	Start counter	1	1
STOP TCNT	Stop timer/counter	1	1
EN TCNT1	Enable timer/counter interrupt	1	1
DIS TCNT1	Disable timer/counter interrupt	1	1

Control

Mnemonic	Description	Bytes	Cycles
EN 1	Enable external interrupt	1	1
DIS 1	Disable external interrupt	1	1
SEL RB0	Select register bank 0	1	1
SEL RB1	Select register bank 1	1	1
SEL MB0	Select memory bank 0	1	1
SEL MB1	Select memory bank 1	1	1
ENT0 CLK	Enable clock output on T0	1	1

Mnemonic	Description	Bytes	Cycles
NOP	No operation	1	1
IDL	Select Idle operation	1	1

ABSOLUTE MAXIMUM RATINGS*

Ambient Temperature Under Bias ..... 0°C to 70°C
Storage Temperature ..... -65°C to + 150°C
Voltage On Any Pin With Respect to Ground ..... -0.5V to +7V
Voltage on Any Pin with Respect to V_{CC} ..... V_{CC} + 0.5V
Max Package Power Dissipation ..... 1.5 Watt

**NOTICE: Stresses above those listed under "Absolute Maximum Ratings" may cause permanent damage to the device. This is a stress rating only and functional operation of the device at these or any other conditions above those indicated in the operational sections of this specification is not implied. Exposure to absolute maximum rating conditions for extended periods may affect device reliability.*

D.C. CHARACTERISTICS (T_A = 0°C to 70°C, V_{CC} = V_{DD} = 5V ± 10%, V_{SS} = 0V)

Symbol	Parameter	Limits			Unit	Test Conditions
		Min	Typ	Max		
V_{IL}	Input Low Voltage (All Except $\overline{RESET}$, X1, X2)	-.5		.8	V	
V_{IL1}	Input Low Voltage ($\overline{RESET}$, X1, X2)	-.5		.6	V	
V_{IH}	Input High Voltage (All Except XTAL1, XTAL2, $\overline{RESET}$)	2.0		V_{CC}	V	
V_{IH1}	Input High Voltage (X1, X2, $\overline{RESET}$)	3.8		V_{CC}	V	
V_{OL}	Output Low Voltage (BUS)			.45	V	I_{OL} = 2.0 mA
V_{OL1}	Output Low Voltage ($\overline{RD}$, $\overline{WR}$, $\overline{PSEN}$, ALE)			.45	V	I_{OL} = 1.8 mA
V_{OL2}	Output Low Voltage (PROG)			.45	V	I_{OL} = 1.0 mA
V_{OL3}	Output Low Voltage (All Other Outputs)			.45	V	I_{OL} = 1.6 mA
V_{OH}	Output High Voltage (BUS)	2.4			V	I_{OH} = -400 μA
V_{OH1}	Output High Voltage ($\overline{RD}$, $\overline{WR}$, $\overline{PSEN}$, ALE)	2.4			V	I_{OH} = -100 μA
V_{OH2}	Output High Voltage (All Other Outputs)	2.4			V	I_{OH} = -40 μA
I_{L1}	Input Leakage Current (T1, $\overline{INT}$)			± 10	μA	$V_{SS} \leq V_{IN} \leq V_{CC}$
I_{LI1}	Input Leakage Current (P10-P17, P20-P27, EA, $\overline{SS}$)			-500	μA	V_{SS} + .45 $\leq V_{IN} \leq V_{CC}$
I_{LI2}	Input leakage Current (RESET)			-300	μA	$V_{SS} \leq V_{IN} \leq V_{IL1}$
I_{L0}	Output Leakage Current (BUS, TO) (High Impedance State)			± 10	μA	V_{SS} + .45 $\leq V_{IN} \leq V_{CC}$
I_{DD}	V_{DD} Supply Current			10	μA	V_{DD} = 2.0V
I_{CC}	Supply Current			15 8.5 1.5	mA mA mA	f = 11 MHz f = 6 MHz f = 1 MHz
I_{IDLE}	Idle Mode Current			500 300 60	μA μA μA	f = 11MHz f = 6 MHz f = 1 MHz

A.C. CHARACTERISTICS (T_A = 0°C to 70°C, V_{CC} = V_{DD} = 5V ± 10%, V_{SS} = 0V)

Symbol	Parameter	f (t_{CY}) (Note 3)	11 MHz		Unit	Conditions (Note 1)
			Min	Max		
t_{LL}	ALE Pulse Width	7/30 t_{CY} -170	150		ns	
t_{AL}	Addr Setup to ALE	1/5 t_{CY} -110	160		ns	
t_{LA}	Addr Hold from ALE	1/15 t_{CY} -40	50		ns	
t_{CC1}	Control Pulse Width ($\overline{RD}$, $\overline{WR}$)	1/2 t_{CY} -200	480		ns	
t_{CC2}	Control Pulse Width ($\overline{PSEN}$)	2/5 t_{CY} -200	350		ns	
t_{DW}	Data Setup before $\overline{WR}$	13/30 t_{CY} -200	390		ns	
t_{WD}	Data Hold after $\overline{WR}$	1/15 t_{CY} -50	40		ns	
t_{DR}	Data Hold ($\overline{RD}$, $\overline{PSEN}$)	1/10 t_{CY} -30	0	110	ns	
t_{RD1}	$\overline{RD}$ to Data in	2/5 t_{CY} -200		350	ns	
t_{RD2}	$\overline{PSEN}$ to Data in	3/10 t_{CY} -200		210	ns	
t_{AW}	Addr Setup to $\overline{WR}$	2/5 t_{CY} -150	400		ns	
t_{AD1}	Addr Setup to Data ($\overline{RD}$)	23/30 t_{CY} -250		800	ns	
t_{AD2}	Addr Setup to Data ($\overline{PSEN}$)	3/5 t_{CY} -250		570	ns	
t_{AFC1}	Addr Float to $\overline{RD}$, $\overline{WR}$	2/15 t_{CY} -40	140		ns	(Note 2)
t_{AFC2}	Addr Float to $\overline{PSEN}$	1/30 t_{CY} -40	10		ns	(Note 2)
t_{LAFC1}	ALE to Control, ($\overline{RD}$, $\overline{WR}$)	1/5 t_{CY} -75	200		ns	
t_{LAFC2}	ALE to Control ($\overline{PSEN}$)	1/10 t_{CY} -75	60		ns	
t_{CA1}	Control to ALE ($\overline{RD}$, $\overline{WR}$, $\overline{PROG}$)	1/15 t_{CY} -40	50		ns	
t_{CA2}	Control to ALE ($\overline{PSEN}$)	4/15 t_{CY} -40	320		ns	
t_{CP}	Port Control Setup to $\overline{PROG}$	2/15 t_{CY} -80	100		ns	
t_{PC}	Port Control Hold to $\overline{PROG}$	4/15 t_{CY} -200	160		ns	
t_{PR}	$\overline{PROG}$ to P2 Input Valid	6/10 t_{CY} -120		700	ns	
t_{PF}	Input Data Hold from $\overline{PROG}$	1/10 t_{CY}	0	140	ns	
t_{DP}	Output Data Setup	2/5 t_{CY} -150	400		ns	
t_{PD}	Output Data Hold	1/10 t_{CY} -50	90		ns	
t_{PP}	$\overline{PROG}$ Pulse Width	7/10 t_{CY} -250	700		ns	
tPL	Port 2 I/O Setup to ALE	4/15 t_{CY} -200	160		ns	
t_{LP}	Port 2 I/O Hold to ALE	1/10 t_{CY} -100	40		ns	
t_{PV}	Port Output from ALE	3/10 t_{CY} +100		510	ns	
t_{CY}	Cycle Time	15/(f_{XTAL})	1.36		µs	
t_{0PRR}	T0 Rep Rate	3/15 t_{CY}	270		ns	

Notes:

1. Control Outputs CL = 80 pF
   BUS Outputs CL = 150pF
2. BUS High Impedance Load 20pF
3. f (t_{CY}) assumes 50% duty cycle on X1 and X2.

WAVEFORMS

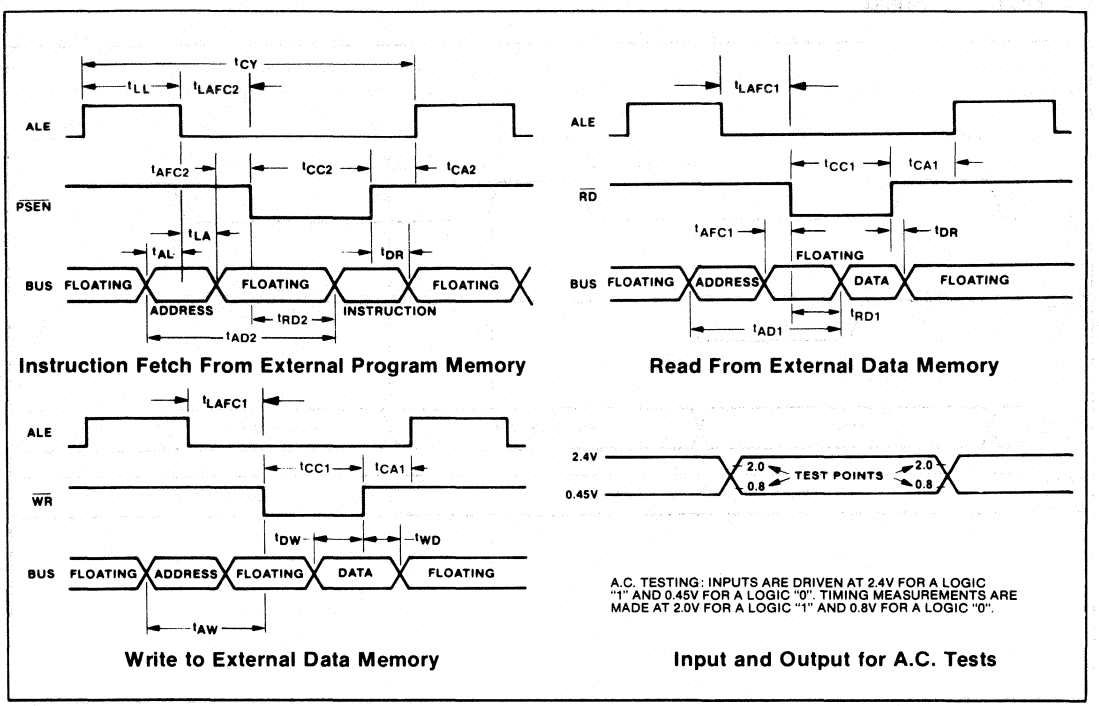

PORT 2 EXPANDER TIMING

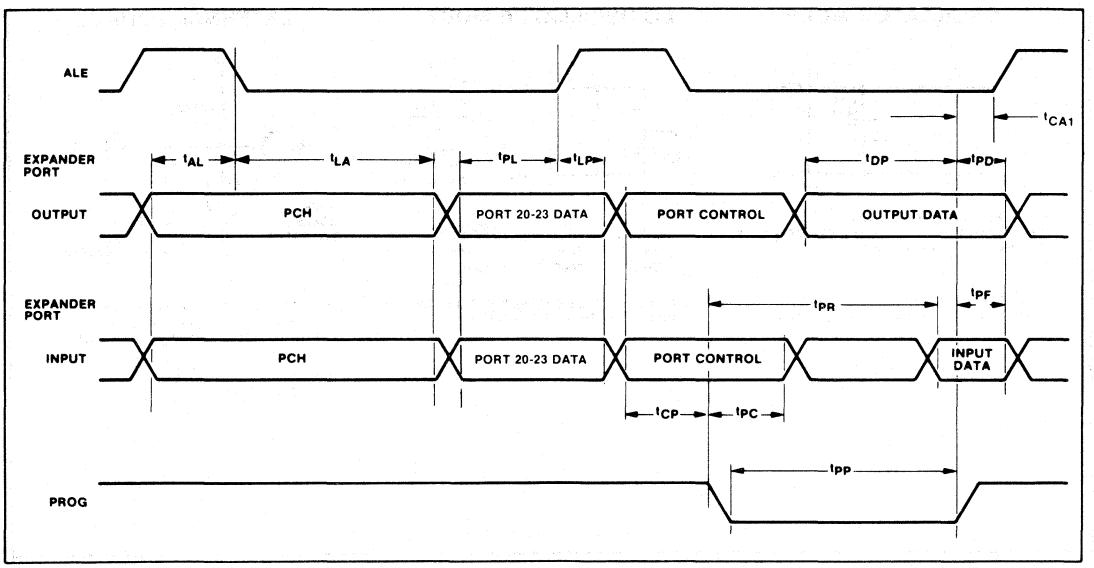

I/O PORT TIMING

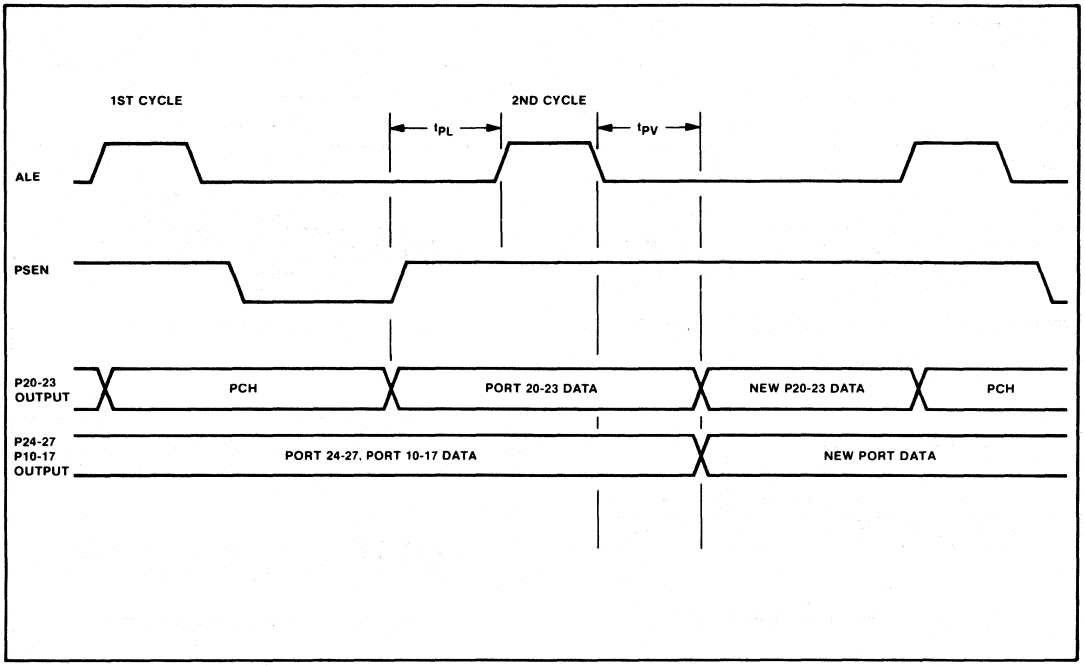

OSCILLATOR MODE

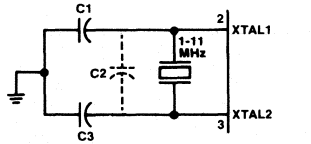

C1 = 5pF ± 1/2pF + (STRAY < 5pF)
C2 = (CRYSTAL SHUNT CAPACITANCE + STRAY) < 8pF
C3 = 20pF ± 1pF + (STRAY < 5pF)

CRYSTAL SERIES RESISTANCE SHOULD BE LESS THAN 75 Ω AT 6MHz; LESS THAN 180 Ω AT 3.6MHz.

LC OSCILLATOR MODE

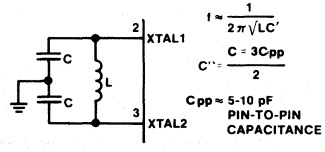

L	C	NOMINAL f
45 μH	20pF	5.2 MHz
120 μH	20pF	3.2 MHz

EACH C SHOULD BE APPROXIMATELY 20pF. INCLUDING STRAY CAPACITANCE.

DRIVING FROM EXTERNAL SOURCE

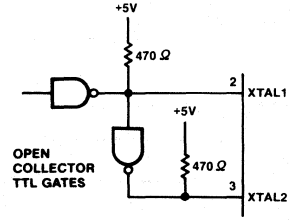

FOR THE 80C48, XTAL1 MUST BE HIGH 35-65% OF THE PERIOD AND XTAL2 MUST BE HIGH 35-65% OF THE PERIOD.

RISE AND FALL TIMES MUST NOT EXCEED 20ns.

8748H/8035H
HMOS SINGLE-CHIP EPROM MICROCOMPUTER

- **8748H 11 MHz User Programmable EPROM**
- **8035H 11 MHz CPU Only with RAM and I/O**

- **8-BIT CPU, EPROM, RAM, I/O in Single Package**
- **High Performance HMOS**
- **1.36 Instruction Cycle All Instructions 1 or 2 Cycles**
- **Over 90 instructions: 70% Single Byte**
- **Compatible with 8080/8085 Series Peripherals**
- **1K x 8 EPROM 64 x 8 RAM 27 I/O Lines**
- **Interval Timer/Event Counter**
- **Easily Expandable Memory and I/O**
- **Two Single Level Interrupts**

The Intel 8748H is a totally self-sufficient, 8-bit parallel computer fabricated on a single silicon chip using Intel's advanced N-channel silicon gate HMOS process.

The 8748H contains on-chip a 1K X 8 UV-erasable, user-programmable program memory, a 64 X 8 RAM data memory, 27 I/O lines, 2 interrupt sources, and an 8-bit timer/counter in addition to on-board oscillator and clock circuits. For systems that require extra capability the 8748H can be expanded using standard memories and MCS-80®/MCS-85® peripherals. The 8035H is the equivalent of the 8748H without program memory and can be used with external ROM and RAM.

To reduce development problems to a minimum and provide maximum flexibility, three interchangeable pin-compatible versions of this single component microcomputer exist: the 8748H with user-programmable and erasable EPROM program memory, the 8048H with factory-programmed mask ROM program memory for low cost, high volume production, and the 8035H without program memory for use with external program memories.

These microcomputers are designed to be efficient controllers as well as arithmetic processors. They have extensive bit handling capability as well as facilities for both binary and BCD arithmetic. Efficient use of program memory results from an instruction set consisting mostly of single byte instructions and no instructions over 2 bytes in length.

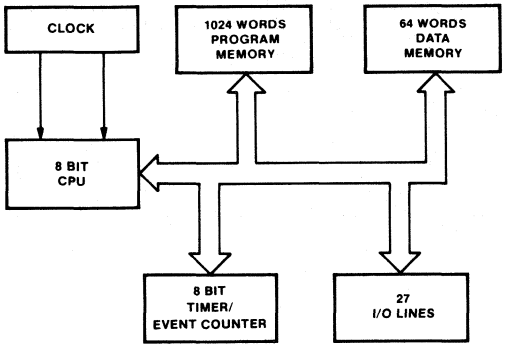

Figure 1. Block Diagram

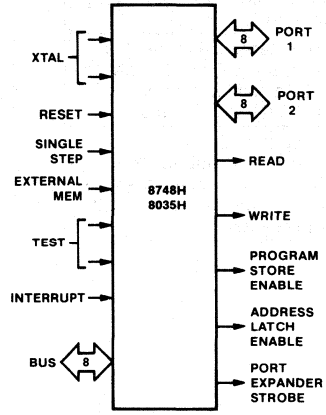

Figure 2. Logic Symbol

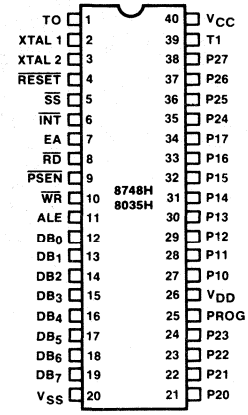

Figure 3. Pin Configuration

Table 1. Pin Description

Symbol	Pin No.	Function
V_{SS}	20	Circuit GND Potential
V_{DD}	26	Programming power supply; +21V during program, +5V during operation.
V_{CC}	40	Main power supply; +5V during operation and programming.
PROG	25	Program pulse (+18V) input pin during 8749H programming. Output strobe for 8243 I/O expander.
P10-P17 Port 1	27-34	8-bit quasi-bidirectional port.
P20-P27 Port 2	21-24 35-38	8-bit quasi-bidirectional port. P20-P23 contain the four high order program counter bits during an external program memory fetch and serve as a 4-bit I/O expander bus for 8243.
DB_0-DB_7 BUS	12-19	True bidirectional port which can be written or read synchronously using the $\overline{RD}$, $\overline{WR}$ strobes. The port can also be statically latched. Contains the 8 low order program counter bits during an external program memory fetch, and receives the addressed instruction under the control of $\overline{PSEN}$. Also contains the address and data during an external RAM data store instruction, under control of ALE, $\overline{RD}$, and $\overline{WR}$.
T0	1	Input pin testable using the conditional transfer instructions JT0 and JNT0. T0 can be designated as a clock output using ENT0 CLK instruction. T0 is also used during programming.
T1	39	Input pin testable using the JT1, and JNT1 instructions. Can be designated the timer/counter input using the STRT CNT instruction.
$\overline{INT}$	6	Interrupt input. Initiates an interrupt if interrupt is enabled. Interrupt is disabled after a reset. Also testable with conditional jump instruction. (Active low)

Symbol	Pin No.	Function
$\overline{RD}$	8	Output strobe activated during a BUS read. Can be used to enable data onto the bus from an external device. Used as a read strobe to external data memory. (Active low)
$\overline{RESET}$	4	Input which is used to initialize the processor. Also used during PROM programming verification, and power down. (Active low) (Non TTL V_{IH})
$\overline{WR}$	10	Output strobe during a bus write. (Active low) Used as write strobe to external data memory.
ALE	11	Address latch enable. This signal occurs once during each cycle and is useful as a clock output. The negative edge of ALE strobes address into external data and program memory.
$\overline{PSEN}$	9	Program store enable. This output occurs only during a fetch to external program memory. (Active low)
$\overline{SS}$	5	Single step input can be used in conjunction with ALE to "single step" the processor through each instruction. (Active low)
EA	7	External access input which forces all program memory fetches to reference external memory. Useful for emulation and debug, and essential for testing and program verification. (Active high)
XTAL1	2	One side of crystal input for internal oscillator. Also input for external source. (Non TTL V_{IH})
XTAL2	3	Other side of crystal input.

Table 2. Instruction Set

Accumulator

Mnemonic	Description	Bytes	Cycles
ADD A, R	Add register to A	1	1
ADD A, @R	Add data memory to A	1	1
ADD A, # data	Add immediate to A	2	2
ADDC A, R	Add register with carry	1	1
ADDC A, @R	Add data memory with carry	1	1
ADDC A, # data	Add immediate with carry	2	2
ANL A, R	And register to A	1	1
ANL A, @R	And data memory to A	1	1
ANL A, # data	And immediate to A	2	2
ORL A, R	Or register to A	1	1
ORL A @R	Or data memory to A	1	1
ORL A, # data	Or immediate to A	2	2
XRL A, R	Exclusive or register to A	1	1
XRL A, @R	Exclusive or data memory to A	1	1
XRL, A, # data	Exclusive or immediate to A	2	2
INC A	Increment A	1	1
DEC A	Decrement A	1	1
CLR A	Clear A	1	1
CPL A	Complement A	1	1
DA A	Decimal adjust A	1	1
SWAP A	Swap nibbles of A	1	1
RL A	Rotate A left	1	1
RLC A	Rotate A left through carry	1	1
RR A	Rotate A right	1	1
RRC A	Rotate A right through carry	1	1

Input/Output

Mnemonic	Description	Bytes	Cycles
IN A, P	Input port to A	1	2
OUTL P, A	Output A to port	1	2
ANL P, # data	And immediate to port	2	2
ORL P, # data	Or immediate to port	2	2
INS A, BUS	Input BUS to A	1	2
OUTL BUS, A	Output A to BUS	1	2
ANL BUS, # data	And immediate to BUS	2	2
ORL BUS, # data	Or immediate to BUS	2	2
MOVD A,P	Input expander port to A	1	2
MOVD P, A	Output A to expander port	1	2
ANLD P, A	And A to expander port	1	2
ORLD P, A	Or A to expander port	1	2

Registers

Mnemonic	Description	Bytes	Cycles
INC R	Increment register	1	1
INC @R	Increment data memory	1	1
DEC R	Decrement register	1	1

Branch

Mnemonic	Description	Bytes	Cycles
JMP addr	Jump unconditional	2	2
JMPP @A	Jump indirect	1	2
DJNZ R, addr	Decrement register and skip	2	2
JC addr	Jump on carry = 1	2	2
JNC addr	Jump on carry = 0	2	2
JZ addr	Jump on A zero	2	2
JNZ addr	Jump on A not zero	2	2
JT0 addr	Jump on TO = 1	2	2
JNT0 addr	Jump on TO = 0	2	2
JT1 addr	Jump on T1 = 1	2	2
JNT1 addr	Jump on T1 = 0	2	2
JF0 addr	Jump on F0 = 1	2	2
JF1 addr	Jump on F1 = 1	2	2
JTF addr	Jump on timer flag	2	2
JN1 addr	Jump on INT = 0	2	2
JBb addr	Jump on accumulator bit	2	2

Subroutine

Mnemonic	Description	Bytes	Cycles
CALL addr	Jump to subroutine	2	2
RETR	Return	1	2
RETR	Return and restore status	1	2

Flags

Mnemonic	Description	Bytes	Cycles
CLR C	Clear carry	1	1
CPL C	Complement carry	1	1
CLR F0	CLear flag 0	1	1
CPL F0	Complement flag 0	1	1
CLR F1	Clear flag 1	1	1
CPL F1	Complement flag 1	1	1

Data Moves

Mnemonic	Description	Bytes	Cycles
MOV A, R	Move register to A	1	1
MOV A, @R	Move data memory to A	1	1
MOV A, # data	Move immediate to A	2	2
MOV R, A	Move A to register	1	1
MOV @R, A	Move A to data memory	1	1
MOV R, # data	Move immediate to register	2	2
MOV @R, #data	Move immediate to data memory	2	2
MOV A, PSW	Move PSW to A	1	1
MOV PSW, A	Move A to PSW	1	1
XCH A, R	Exchange A and register	1	1
XCH A, @R	Exchange A and data memory	1	1
XCHD A, @R	Exchange nibble of A and register	1	1
MOVX A, @R	Move external data memory to A	1	2
MOVX @R, A	Move A to external data memory	1	2
MOVP A, @A	Move to A from current page	1	2
MOVP3 A, @	Move to A from page 3	1	2

Timer/Counter

Mnemonic	Description	Bytes	Cycles
MOV A, T	Read timer/counter	1	1
MOV T, A	Load timer/counter	1	1
STRT T	Start timer	1	1
STRT CNT	Start counter	1	1
STOP TCNT	Stop timer/counter	1	1
EN TCNT1	Enable timer/counter interrupt	1	1
DIS TCNT1	Disable timer/counter interrupt	1	1

Control

Mnemonic	Description	Bytes	Cycles
EN 1	Enable external interrupt	1	1
DIS 1	Disable external interrupt	1	1
SEL RB0	Select register bank 0	1	1
SEL RB1	Select register bank 1	1	1
SEL MB0	Select memory bank 0	1	1
SEL MB1	Select memory bank 1	1	1
ENT 0 CLK	Enable clock output on T0	1	1

Mnemonic	Description	Bytes	Cycles
NOP	No operation	1	1

Mnemonics© Intel Corporation, 1981.

ABSOLUTE MAXIMUM RATINGS*

Ambient Temperature Under Bias ..... 0°C to 70°C
Storage Temperature ..... -65°C to + 150°C
Voltage On Any Pin With Respect to Ground ..... -0.5V to +7V
Power Dissipation ..... 1.5 Watt

NOTICE: Stresses above those listed under "Absolute Maximum Ratings" may cause permanent damage to the device. This is a stress rating only and functional operation of the device at these or any other conditions above those indicated in the operational sections of this specification is not implied. Exposure to absolute maximum rating conditions for extended periods may affect device reliability.

D.C. CHARACTERISTICS (T_A = 0°C to 70°C, V_{CC} = V_{DD} = 5V ± 10%, V_{SS} = 0V)

Symbol	Parameter	Limits			Unit	Test Conditions
		Min	Typ	Max		
V_{IL}	Input Low Voltage (All Except $\overline{RESET}$, X1, X2)	-.5		.8	V	
V_{IL1}	Input Low Voltage ($\overline{RESET}$, X1, X2)	-.5		.6	V	
V_{IH}	Input High Voltage (All Except XTAL1, XTAL2, $\overline{RESET}$)	2.0		V_{CC}	V	
V_{IH1}	Input High Voltage (X1, X2, $\overline{RESET}$)	3.8		V_{CC}	V	
V_{OL}	Output Low Voltage (BUS)			.45	V	I_{OL} = 2.0 mA
V_{OL1}	Output Low Voltage ($\overline{RD}$, $\overline{WR}$, $\overline{PSEN}$, ALE)			.45	V	I_{OL} = 1.8 mA
V_{OL2}	Output Low Voltage (PROG)			.45	V	I_{OL} = 1.0 mA
V_{OL3}	Output Low Voltage (All Other Outputs)			.45	V	I_{OL} = 1.6 mA
V_{OH}	Output High Voltage (BUS)	2.4			V	I_{OH} = -400 μA
V_{OH1}	Output High Voltage ($\overline{RD}$, $\overline{WR}$, $\overline{PSEN}$, ALE)	2.4			V	I_{OH} = -100 μA
V_{OH2}	Output High Voltage (All Other Outputs)	2.4			V	I_{OH} = -40 μA
I_{L1}	Input Leakage Current (T1, $\overline{INT}$)			± 10	μA	$V_{SS} \leq V_{IN} \leq V_{CC}$
I_{LI1}	Input Leakage Current (P10-P17, P20-P27, EA, $\overline{SS}$)			-500	μA	V_{SS} + .45 $\leq V_{IN} \leq V_{CC}$
I_{L0}	Output Leakage Current (BUS, TO) (High Impedance State)			± 10	μA	V_{SS} + .45 $\leq V_{IN} \leq V_{CC}$
I_{DD}	V_{DD} Supply Current		5	10	mA	
I_{DD} + I_{CC}	Total Supply Current		50	110	mA	

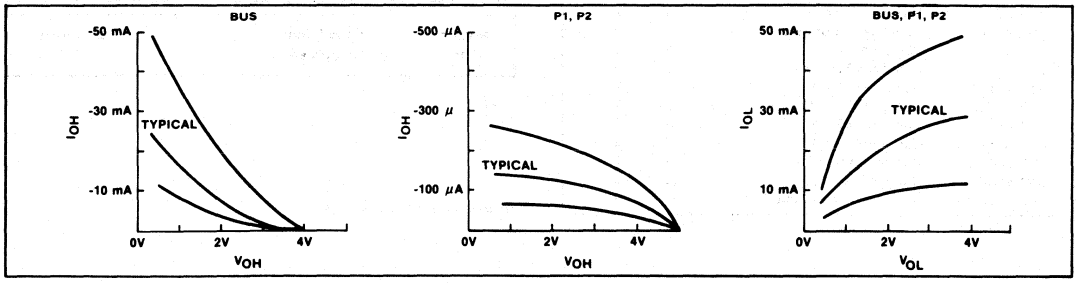

A.C. CHARACTERISTICS (T_A = 0°C to 70°C, V_{CC} = V_{DD} = 5V ± 10%, V_{SS} = 0V)

Symbol	Parameter	f (t_{CY})	11 MHz		Unit	Conditions (Note 1)
			Min	Max		
t_{LL}	ALE Pulse Width	7/30 t_{CY} -170	150		ns	
t_{AL}	Addr Setup to ALE	1/5 t_{CY} -110	160		ns	
t_{LA}	Addr Hold from ALE	1/15 t_{CY} -40	50		ns	
t_{CC1}	Control Pulse Width ($\overline{RD}$, $\overline{WR}$)	1/2 t_{CY} -200	480		ns	
t_{CC2}	Control Pulse Width ($\overline{PSEN}$)	2/5 t_{CY} -200	350		ns	
t_{DW}	Data Setup before $\overline{WR}$	13/30 t_{CY} -200	390		ns	
t_{WD}	Data Hold after $\overline{WR}$	1/15 t_{CY} -50	40		ns	(Note 2)
t_{DR}	Data Hold ($\overline{RD}$, $\overline{PSEN}$)	1/10 t_{CY} -30	0	110	ns	
t_{RD1}	$\overline{RD}$ to Data in	2/5 t_{CY} -200		350	ns	
t_{RD2}	$\overline{PSEN}$ to Data in	3/10 t_{CY} -200		210	ns	
t_{AW}	Addr Setup to $\overline{WR}$	2/5 t_{CY} -150	400		ns	
t_{AD1}	Addr Setup to Data ($\overline{RD}$)	23/30 t_{CY} -250		800	ns	
t_{AD2}	Addr Setup to Data ($\overline{PSEN}$)	3/5 t_{CY} -250		570	ns	
t_{AFC1}	Addr Float to $\overline{RD}$, $\overline{WR}$	2/15 t_{CY} -40	140		ns	
t_{AFC2}	Addr Float to $\overline{PSEN}$	1/30 t_{CY} -40	10		ns	
t_{LAFC1}	ALE to Control, ($\overline{RD}$, $\overline{WR}$)	1/5 t_{CY} -75	200		ns	
t_{LAFC2}	ALE to Control ($\overline{PSEN}$)	1/10 t_{CY} -75	60		ns	
t_{CA1}	Control to ALE ($\overline{RD}$, $\overline{WR}$, $\overline{PROG}$)	1/15 t_{CY} -40	50		ns	
t_{CA2}	Control to ALE ($\overline{PSEN}$)	4/15 t_{CY} -40	320		ns	
t_{CP}	Port Control Setup to $\overline{PROG}$	2/15 t_{CY} -80	100		ns	
t_{PC}	Port Control Hold to $\overline{PROG}$	4/15 t_{CY} -200	160		ns	
t_{PR}	$\overline{PROG}$ to P2 Input Valid	6/10 t_{CY} -120		700	ns	
t_{PF}	Input Data Hold from $\overline{PROG}$	1/10 t_{CY}	0	140	ns	
t_{DP}	Output Data Setup	2/5 t_{CY} -150	400		ns	
t_{PD}	Output Data Hold	1/10 t_{CY} -50	90		ns	
t_{PP}	$\overline{PROG}$ Pulse Width	7/10 t_{CY} -250	700		ns	
tPL	Port 2 I/O Setup to ALE	4/15 t_{CY} -200	160		ns	
t_{LP}	Port 2 I/O Hold to ALE	1/10 t_{CY} -100	40		ns	
t_{PV}	Port Output from ALE	3/10 t_{CY} +100		510	ns	
t_{CY}	Cycle Time	1/(f_{XTAL} x 15)	1.36		µs	
t_{0PRR}	T0 Rep Rate	3/15 t_{CY}	270		ns	

Notes:

1. Control Outputs CL = 80 pF
   BUS Outputs CL = 150pF
   When driven by an ext. clock, AC specs are based on 50% duty cycles.
2. BUS High Impedance Load 20pF

The 8748H exhibits some sensitivity to light. The RAM storage area can be altered when exposed to light. When operating the 8748H, the window must be covered with an opaque material.

AFN-02082A

WAVEFORMS

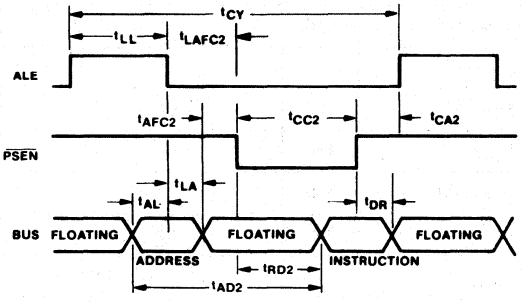

Instruction Fetch From External Program Memory

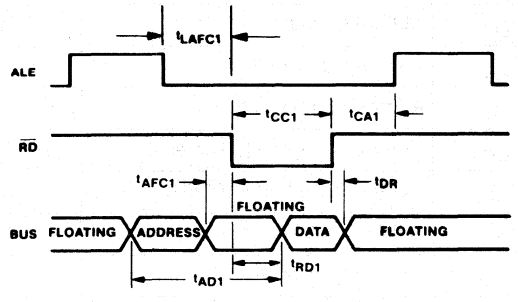

Read From External Data Memory

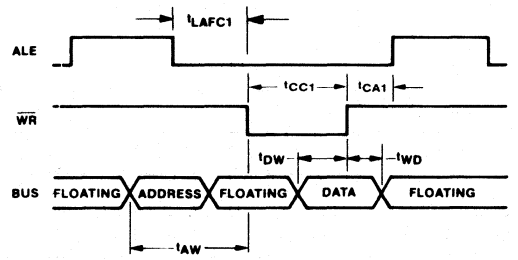

Write to External Data Memory

Input and Output for A.C. Tests

PORT 2 EXPANDER TIMING

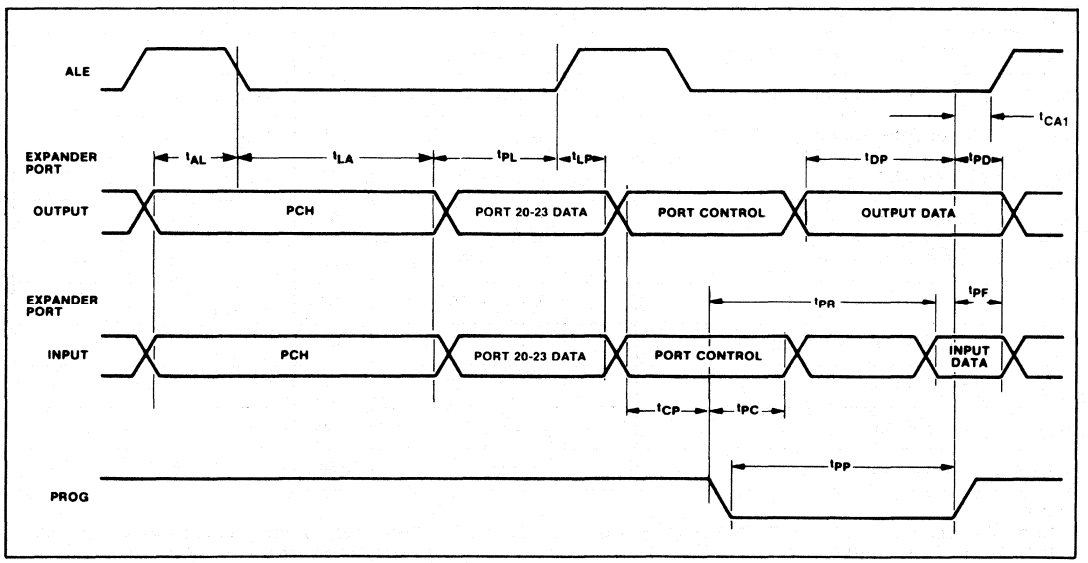

WAVEFORMS

COMBINATION PROGRAM/VERIFY MODE (EPROM's ONLY)

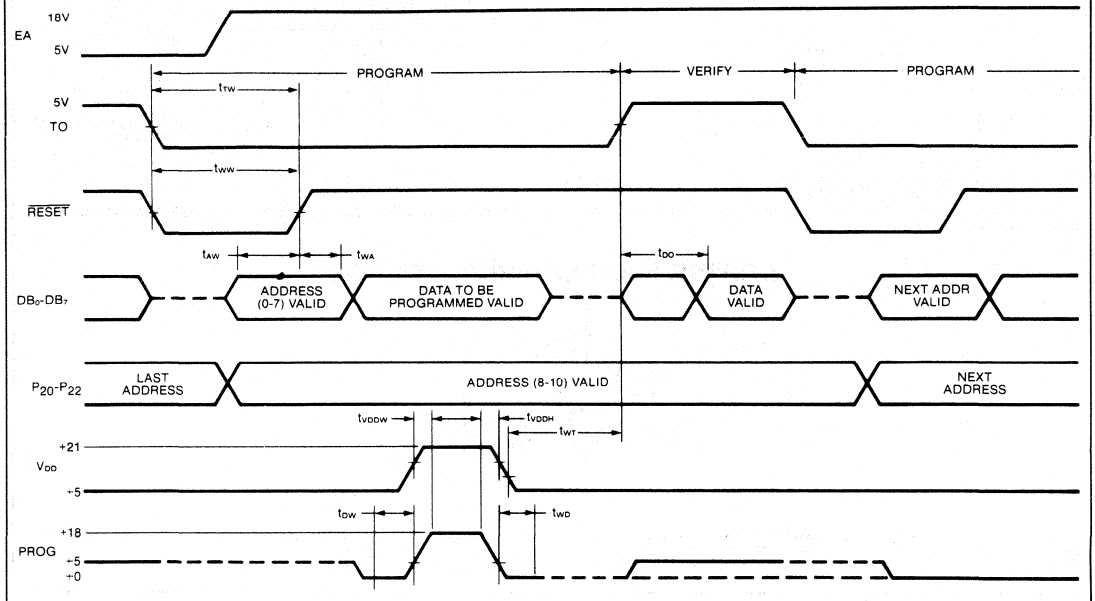

VERIFY MODE (ROM/EPROM)

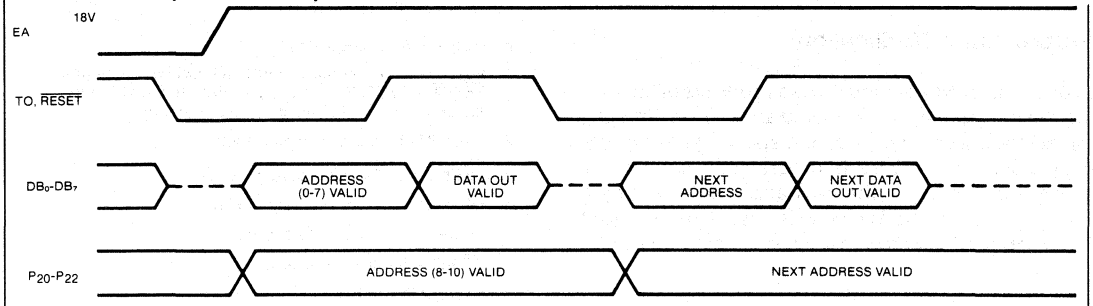

NOTES:
1. PROG MUST FLOAT IF EA IS LOW (i.e., ≠ 18V).
2. X_1 AND X_2 DRIVEN BY 3 MHz CLOCK WILL GIVE 5μsec t_{CY}.

The 8748H EPROM can be programmed by:

Universal PROM Programmer (UPP series) peripheral of the Intellec® Development System with a UPP-848 Personality Card and a UPP-549 adapter socket.

CRYSTAL OSCILLATOR MODE

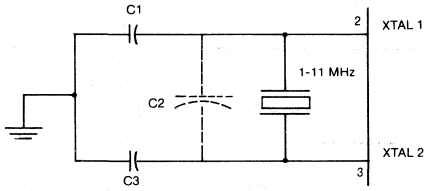

C1 = 5 pF ± ½ pF + (STRAY < 5 pF)
C2 = (CRYSTAL ± STRAY) < 8 pF
C3 = 20 pF ± 1 pF ± (STRAY < 5 pF)

CRYSTAL SERIES RESISTANCE SHOULD BE LESS THAN 75Ω AT 6 MHz; LESS THAN 180Ω AT 3.6 MHz.

LC OSCILLATOR MODE

L	C	NOMINAL f
45 μH	20 pF	5.2 MHz
120 μH	20 pF	3.2 MHz

$f \approx \frac{1}{2\pi\sqrt{LC'}}$

$C' = \frac{C + 3C_{PP}}{2}$

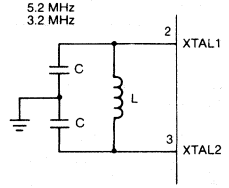

$C_{PP} \approx 5 - 10$ pF PIN-TO-PIN CAPACITANCE

EACH C SHOULD BE APPROXIMATELY 20 pF, INCLUDING STRAY CAPACITANCE.

DRIVING FROM EXTERNAL SOURCE

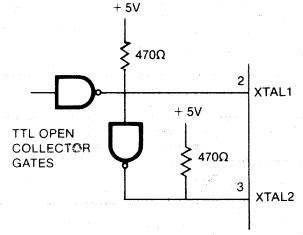

FOR XTAL 1 AND XTAL 2 DEFINE "HIGH" AS VOLTAGES ABOVE 1.6V AND "LOW" AS VOLTAGES BELOW 1.6V. THE DUTY CYCLE REQUIREMENTS FOR EXTERNALLY DRIVING XTAL 1 AND XTAL 2 USING THE CIRCUIT SHOWN ABOVE ARE AS FOLLOWS:

FOR THE 8748H, XTAL 1 MUST BE HIGH 45-50% OF THE PERIOD AND XTAL 2 MUST BE HIGH 50-55% OF THE PERIOD.
RISE AND FALL TIMES MUST NOT EXCEED 20 ns.

PROGRAMMING, VERIFYING, AND ERASING THE 8748H EPROM

Programming Verification

In brief, the programming process consists of: activating the program mode, applying an address, latching the address, applying data, and applying a programming pulse. Each word is programmed completely before moving on to the next and is followed by a verification step. The following is a list of the pins used for programming and a description of their functions:

Pin	Function
XTAL 1	Clock Input (1 to 3MHz)
Reset	Initialization and Address Latching
Test 0	Selection of Program or Verify Mode
EA	Activation of Program/Verify Modes
BUS	Address and Data Input Data Output During Verify
P20-22	Address Input
V_{DD}	Programming Power Supply
PROG	Program Pulse Input

WARNING:

An attempt to program a missocketed 8748H will result in severe damage to the part. An indication of a properly socketed part is the appearance of the ALE clock output. The lack of this clock may be used to disable the programmer.

The Program/Verify sequence is:

1. $V_{DD} = 5V$, Clock applied or internal oscillator operating, $\overline{RESET} = 0V$, TEST 0 = 5V, EA = 5V, BUS and PROG floating. P10 and P11 must be tied to ground.
2. Insert 8748H in programming socket.
3. TEST 0 = 0V (select program mode)
4. EA = 18V (activate program mode)
5. Address applied to BUS and P20-22
6. $\overline{RESET} = 5V$ (latch address)
7. Data applied to BUS
8. $V_{DD} = 21V$ (programming power)
9. PROG = 0V followed by one 50ms pulse to 18V
10. $V_{DD} = 5V$
11. TEST 0 = 5V (verify mode)
12. Read and verify data on BUS
13. TEST 0 = 0V
14. $\overline{RESET} = 0V$ and repeat from step 5
15. Programmer should be at conditions of step 1 when 8748H is removed from socket.

A.C. TIMING SPECIFICATION FOR PROGRAMMING (T_A = 25°C ± 5°C, V_{CC} = 5V ± 5%, V_{DD} = 20V ± 1V)

Symbol	Parameter	Min	Max	Unit	Test Conditions
t_{AW}	Address Setup Time to $\overline{RESET}$↑	$4t_{CY}$			
t_{WA}	Address Hold Time After $\overline{RESET}$ ↑	$4t_{CY}$			
t_{DW}	Data in Setup Time to PROG ↑	$4t_{CY}$			
t_{WD}	Data in Hold Time After PROG ↓	$4t_{CY}$			
t_{PH}	$\overline{RESET}$ Hold Time to Verify	$4t_{CY}$			
t_{VDDW}	V_{DD}	$4t_{CY}$			
t_{VDDH}	V_{DD} Hold Time After PROG ↓	0			
t_{PW}	Program Pulse Width	50	60	mS	
t_{TW}	Test 0 Setup Time for Program Mode	$4t_{CY}$			
t_{WT}	Test 0 Hold Time After Program Mode	$4t_{CY}$			
t_{DO}	Test 0 to Data Out Delay		$4t_{CY}$		
t_{WW}	$\overline{RESET}$ Pulse Width to Latch Address	$4t_{CY}$			
t_r, t_f	V_{DD} and PROG Rise and Fall Times	0.5	2.0	μs	
t_{CY}	CPU Operation Cycle Time	5.0		μs	
t_{RE}	$\overline{RESET}$ Setup Time before EA↑	$4t_{CY}$			

NOTE: If Test 0 is high t_{DO} can be triggered by $\overline{RESET}$ ↑

D.C. SPECIFICATION FOR PROGRAMMING (T_A = 25°C ± 5°C, V_{CC} = 5V ± 5%, V_{DD} = 21V ± .5V)

Symbol	Parameter	Min	Max	Unit	Test Conditions
V_{DDH}	V_{DD} Program Voltage High Level	20.5	21.5	V	
V_{DDL}	V_{DD} Voltage Low Level	4.75	5.25	V	
V_{PH}	PROG Program Voltage High Level	17.5	18.5	V	
V_{PL}	PROG Voltage Low Level		0.2	V	
V_{EAH}	EA Program or Verify Voltage High Level	17.5	18.5	V	
I_{DD}	V_{DD} High Voltage Supply Current		30.0	mA	
I_{PROG}	PROG High Voltage Supply Current		16.0	mA	
I_{EA}	EA High Voltage Supply Current		1.0	mA	

PRELIMINARY

8049H/8039HL
HMOS SINGLE COMPONENT 8-BIT MICROCOMPUTER

- **8049H Mask Programmable ROM**
- **8039HL CPU Only with Power Down Mode**

- **8-BIT CPU, ROM, RAM, I/O in Single Package**
- **High Performance HMOS**
- **Reduced Power Consumption**
- **1.4 μsec and 1.9 μsec Cycle Versions All Instructions 1 or 2 Cycles.**
- **Over 90 instructions: 70% Single Byte**
- **2K x 8 ROM**
  128 x 8 RAM
  27 I/O Lines
- **Interval Timer/Event Counter**
- **Easily Expandable Memory and I/O**
- **Compatible with 8080/8085 Series Peripherals**
- **Two Single Level Interrupts**

The Intel® 8049H/8039HL are totally self-sufficient, 8-bit parallel computers fabricated on single silicon chips using Intel's advanced N-channel silicon gate HMOS process.

The 8049H contains a 2K X 8 program memory, a 128 X 8 RAM data memory, 27 I/O lines, and an 8-bit timer/counter in addition to on-board oscillator and clock circuits. For systems that require extra capability the 8049H can be expanded using standard memories and MCS-80®/MCS-85® peripherals. The 8039HL is the equivalent of the 8049H without program memory and can be used with external ROM and RAM.

To reduce development problems to a minimum and provide maximum flexibility, a logically and functionally pin compatible version of the 8049H with UV-erasable user-programmable EPROM program memory will soon be available. The 8749 will emulate the 8049H up to 11 MHz clock frequency with minor differences.

The 8049H is fully compatible with the 8049.

These microcomputers are designed to be efficient controllers as well as arithmetic processors. They have extensive bit handling capability as well as facilities for both binary and BCD arithmetic. Efficient use of program memory results from an instruction set consisting mostly of single byte instructions and no instructions over 2 bytes in length.

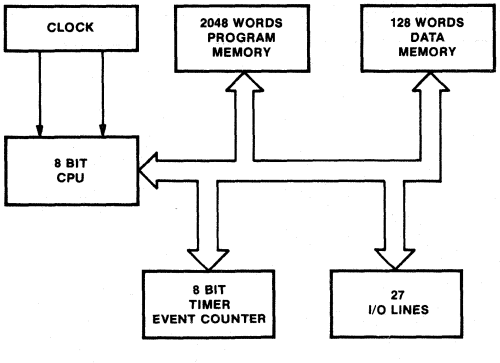

Figure 1.
Block Diagram

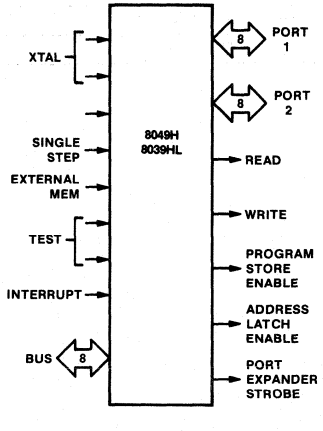

Figure 2.
Logic Symbol

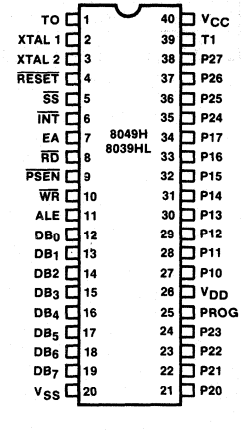

Figure 3.
Pin Configuration

Intel Corporation Assumes No Responsibilty for the Use of Any Circuitry Other Than Circuitry Embodied in an Intel Product. No Other Circuit Patent Licenses are Implied.
©INTEL CORPORATION, 1980

Table 1. Pin Description

Symbol	Pin No.	Function
V_{SS}	20	Circuit GND potential
V_{DD}	26	Low power standby pin
V_{CC}	40	Main power supply; +5V during operation.
PROG	25	Output strobe for 8243 I/O expander.
P10-P17 Port 1	27-34	8-bit quasi-bidirectional port.
P20-P27 Port 2	21-24	8-bit quasi-bidirectional port.
	35-38	P20-P23 contain the four high order program counter bits during an external program memory fetch and serve as a 4-bit I/O expander bus for 8243.
DB0-DB7 BUS	12-19	True bidirectional port which can be written or read synchronously using the $\overline{RD}$, $\overline{WR}$ strobes. The port can also be statically latched. Contains the 8 low order program counter bits during an external program memory fetch, and receives the addressed instruction under the control of $\overline{PSEN}$. Also contains the address and data during an external RAM data store instruction, under control of ALE, $\overline{RD}$, and $\overline{WR}$.
TO	1	Input pin testable using the conditional transfer instructions JT0 and JNT0. T0 can be designated as a clock output using ENT0 CLK instruction.
T1	39	Input pin testable using the JT1, and JNT1 instructions. Can be designated the timer/counter input using the STRT CNT instruction.
$\overline{INT}$	6	Interrupt input. Initiates an interrupt if interrupt is enabled. Interrupt is disabled after a reset. Also testable with conditional jump instruction. (Active low)

Symbol	Pin No.	Function
$\overline{RD}$	8	Output strobe activated during a BUS read. Can be used to enable data onto the bus from an external device. Used as a read strobe to external data memory. (Active low)
$\overline{RESET}$	4	Input which is used to initialize the processor. (Active low) (Non TTL V_{IH})
$\overline{WR}$	10	Output strobe during a bus write. (Active low) Used as write strobe to external data memory.
ALE	11	Address latch enable. This signal occurs once during each cycle and is useful as a clock output. The negative edge of ALE strobes address into external data and program memory.
$\overline{PSEN}$	9	Program store enable. This output occurs only during a fetch to external program memory. (Active low)
$\overline{SS}$	5	Single step input can be used in conjunction with ALE to "single step" the processor through each instruction. (Active low)
EA	7	External access input which forces all program memory fetches to reference external memory. Useful for emulation and debug, and essential for testing and program verification. (Active high)
XTAL1	2	One side of crystal input for internal oscillator. Also input for external source. (Non TTL V_{IH})
XTAL2	3	Other side of crystal input.

Table 2. Instruction Set

Accumulator

Mnemonic	Description	Bytes	Cycles
ADD A, R	Add register to A	1	1
ADD A, @R	Add data memory to A	1	1
ADD A, # data	Add immediate to A	2	2
ADDC A, R	Add register with carry	1	1
ADDC A, @R	Add data memory with carry	1	1
ADDC A, # data	Add immediate with carry	2	2
ANL A, R	And register to A	1	1
ANL A, @R	And data memory to A	1	1
ANL A, # data	And immediate to A	2	2
ORL A, R	Or register to A	1	1
ORL A @R	Or data memory to A	1	1
ORL A, # data	Or immediate to A	2	2
XRL A, R	Exclusive or register to A	1	1
XRL A, @R	Exclusive or data memory to A	1	1
XRL, A, # data	Exclusive or immediate to A	2	2
INC A	Increment A	1	1
DEC A	Decrement A	1	1
CLR A	Clear A	1	1
CPL A	Complement A	1	1
DA A	Decimal adjust A	1	1
SWAP A	Swap nibbles of A	1	1
RL A	Rotate A left	1	1
RLC A	Rotate A left through carry	1	1
RR A	Rotate A right	1	1
RRC A	Rotate A right through carry	1	1

Input/Output

Mnemonic	Description	Bytes	Cycles
IN A, P	Input port to A	1	2
OUTL P, A	Output A to port	1	2
ANL P, # data	And immediate to port	2	2
ORL P, # data	Or immediate to port	2	2
INS A, BUS	Input BUS to A	1	2
OUTL BUS, A	Output A to BUS	1	2
ANL BUS, # data	And immediate to BUS	2	2
ORL BUS, # data	Or immediate to BUS	2	2
MOVD A,P	Input expander port to A	1	2
MOVD P, A	Output A to expander port	1	2
ANLD P, A	And A to expander port	1	2
ORLD P, A	Or A to expander port	1	2

Registers

Mnemonic	Description	Bytes	Cycles
INC R	Increment register	1	1
INC @R	Increment data memory	1	1
DEC R	Decrement register	1	1

Branch

Mnemonic	Description	Bytes	Cycles
JMP addr	Jump unconditional	2	2
JMPP @A	Jump indirect	1	2
DJNZ R, addr	Decrement register and skip	2	2
JC addr	Jump on carry = 1	2	2
JNC addr	Jump on carry = 0	2	2
JZ addr	Jump on A zero	2	2
JNZ addr	Jump on A not zero	2	2
JTO addr	Jump on TO = 1	2	2
JNTO addr	Jump on TO = 0	2	2
JT1 addr	Jump on T1 = 1	2	2
JNT1 addr	Jump on T1 = 0	2	2
JF0 addr	Jump on F0 = 1	2	2
JF1 addr	Jump on F1 = 1	2	2
JTF addr	Jump on timer flag	2	2
JN1 addr	Jump on INT = 0	2	2
JBb addr	Jump on accumulator bit	2	2

Subroutine

Mnemonic	Description	Bytes	Cycles
CALL addr	Jump to subroutine	2	2
RETR	Return	1	2
RETR	Return and restore status	1	2

Flags

Mnemonic	Description	Bytes	Cycles
CLR C	Clear carry	1	1
CPL C	Complement carry	1	1
CLR F0	CLear flag 0	1	1
CPL F0	Complement flag 0	1	1
CLR F1	Clear flag 1	1	1
CPL F1	Complement flag 1	1	1

Data Moves

Mnemonic	Description	Bytes	Cycles
MOV A, R	Move register to A	1	1
MOV A, @R	Move data memory to A	1	1
MOV A, # data	Move immediate to A	2	2
MOV R, A	Move A to register	1	1
MOV @R, A	Move A to data memory	1	1
MOV R, # data	Move immediate to register	2	2
MOV @R, #data	Move immediate to data memory	2	2
MOV A, PSW	Move PSW to A	1	1
MOV PSW, A	Move A to PSW	1	1
XCH A, R	Exchange A and register	1	1
XCH A, @R	Exchange A and data memory	1	1
XCHD A, @R	Exchange nibble of A and register	1	1
MOVX A, @R	Move external data memory to A	1	2
MOVX @R, A	Move A to external data memory	1	2
MOVP A, @A	Move to A from current page	1	2
MOVP3 A, @	Move to A from page 3	1	2

Timer/Counter

Mnemonic	Description	Bytes	Cycles
MOV A, T	Read timer/counter	1	1
MOV T, A	Load timer/counter	1	1
STRT T	Start timer	1	1
STRT CNT	Start counter	1	1
STOP TCNT	Stop timer/counter	1	1
EN TCNT1	Enable timer/counter interrupt	1	1
DIS TCNT1	Disable timer/counter interrupt	1	1

Control

Mnemonic	Description	Bytes	Cycles
EN 1	Enable external interrupt	1	1
DIS 1	Disable external interrupt	1	1
SEL RB0	Select register bank 0	1	1
SEL RB1	Select register bank 1	1	1
SEL MB0	Select memory bank 0	1	1
SEL MB1	Select memory bank 1	1	1
ENT0 CLK	Enable clock output on T0	1	1

Mnemonic	Description	Bytes	Cycles
NOP	No operation	1	1

ABSOLUTE MAXIMUM RATINGS*

Ambient Temperature Under Bias ..... 0°C to 70°C
Storage Temperature ..... -65°C to + 150°C
Voltage On Any Pin With Respect to Ground ..... -0.5V to +7V
Power Dissipation ..... 1.5 Watt

NOTICE: Stresses above those listed under "Absolute Maximum Ratings" may cause permanent damage to the device. This is a stress rating only and functional operation of device at these or any other conditions above those indicated in the operational sections of this specification is not implied.

D.C. CHARACTERISTICS (T_A = 0°C to 70°C, V_{CC} = V_{DD} = 5V ± 10%, V_{SS} = 0V)

Symbol	Parameter	Limits			Unit	Test Conditions
		Min	Typ	Max		
V_{IL}	Input Low Voltage (All Except $\overline{RESET}$, X1, X2)	-.5		.8	V	
V_{IL1}	Input Low Voltage ($\overline{RESET}$, X1, X2)	-.5		.6	V	
V_{IH}	Input High Voltage (All Except XTAL1, XTAL2, $\overline{RESET}$)	2.0		V_{CC}	V	
V_{IH1}	Input High Voltage (X1, X2, $\overline{RESET}$)	3.8		V_{CC}	V	
V_{OL}	Output Low Voltage (BUS)			.45	V	I_{OL} = 2.0 mA
V_{OL1}	Output Low Voltage ($\overline{RD}$, $\overline{WR}$, $\overline{PSEN}$, ALE)			.45	V	I_{OL} = 1.8 mA
V_{OL2}	Output Low Voltage (PROG)			.45	V	I_{OL} = 1.0 mA
V_{OL3}	Output Low Voltage (All Other Outputs)			.45	V	I_{OL} = 1.6 mA
V_{OH}	Output High Voltage (BUS)	2.4			V	I_{OH} = -400 μA
V_{OH1}	Output High Voltage ($\overline{RD}$, $\overline{WR}$, $\overline{PSEN}$, ALE)	2.4			V	I_{OH} = -100 μA
V_{OH2}	Output High Voltage (All Other Outputs)	2.4			V	I_{OH} = -40 μA
I_{L1}	Input Leakage Current (T1, $\overline{INT}$)			± 10	μA	$V_{SS} \leq V_{IN} \leq V_{CC}$
I_{LI1}	Input Leakage Current (P10-P17, P20-P27, EA, $\overline{SS}$)			-500	μA	V_{SS} + .45 $\leq V_{IN} \leq V_{CC}$
I_{L0}	Output Leakage Current (BUS, TO) (High Impedance State)			± 10	μA	V_{SS} + .45 $\leq V_{IN} \leq V_{CC}$
I_{DD}	V_{DD} Supply Current		5	10	mA	
I_{DD} + I_{CC}	Total Supply Current		50	100	mA	

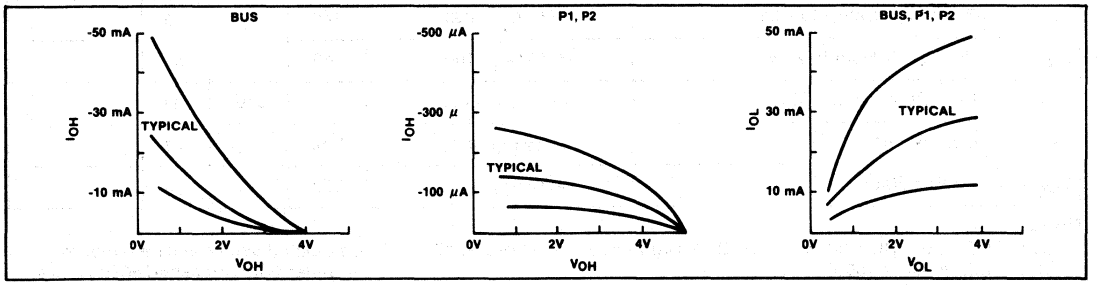

A.C. CHARACTERISTICS (T_A = 0°C to 70°C, V_{CC} = V_{DD} = 5V ± 10%, V_{SS} = 0V)

Symbol	Parameter	f (t_{CY}) (Note 3)	11 MHz Min	11 MHz Max	Unit	Conditions (Note 1)
t_{LL}	ALE Pulse Width	7/30 t_{CY} -170	150		ns	
t_{AL}	Addr Setup to ALE	1/5 t_{CY} -110	160		ns	
t_{LA}	Addr Hold from ALE	1/15 t_{CY} -40	50		ns	
t_{CC1}	Control Pulse Width ($\overline{RD}$, $\overline{WR}$)	1/2 t_{CY} -200	480		ns	
t_{CC2}	Control Pulse Width ($\overline{PSEN}$)	2/5 t_{CY} -200	350		ns	
t_{DW}	Data Setup before $\overline{WR}$	13/30 t_{CY} -200	390		ns	
t_{WD}	Data Hold after $\overline{WR}$	1/15 t_{CY} -50	40		ns	(Note 2)
t_{DR}	Data Hold ($\overline{RD}$, $\overline{PSEN}$)	1/10 t_{CY} -30	0	110	ns	
t_{RD1}	$\overline{RD}$ to Data in	2/5 t_{CY} -200		350	ns	
t_{RD2}	$\overline{PSEN}$ to Data in	3/10 t_{CY} -200		210	ns	
t_{AW}	Addr Setup to $\overline{WR}$	2/5 t_{CY} -150	400		ns	
t_{AD1}	Addr Setup to Data ($\overline{RD}$)	23/30 t_{CY} -250		800	ns	
t_{AD2}	Addr Setup to Data ($\overline{PSEN}$)	3/5 t_{CY} -250		570	ns	
t_{AFC1}	Addr Float to $\overline{RD}$, $\overline{WR}$	2/15 t_{CY} -40	140		ns	
t_{AFC2}	Addr Float to $\overline{PSEN}$	1/30 t_{CY} -40	10		ns	
t_{LAFC1}	ALE to Control, ($\overline{RD}$, $\overline{WR}$)	1/5 t_{CY} -75	200		ns	
t_{LAFC2}	ALE to Control ($\overline{PSEN}$)	1/10 t_{CY} -75	60		ns	
t_{CA1}	Control to ALE ($\overline{RD}$, $\overline{WR}$, $\overline{PROG}$)	1/15 t_{CY} -40	50		ns	
t_{CA2}	Control to ALE ($\overline{PSEN}$)	4/15 t_{CY} -40	320		ns	
t_{CP}	Port Control Setup to $\overline{PROG}$	2/15 t_{CY} -80	100		ns	
t_{PC}	Port Control Hold to $\overline{PROG}$	4/15 t_{CY} -200	160		ns	
t_{PR}	$\overline{PROG}$ to P2 Input Valid	6/10 t_{CY} -120		700	ns	
t_{PF}	Input Data Hold from $\overline{PROG}$	1/10 t_{CY}	0	140	ns	
t_{DP}	Output Data Setup	2/5 t_{CY} -150	400		ns	
t_{PD}	Output Data Hold	1/10 t_{CY} -50	90		ns	
t_{PP}	$\overline{PROG}$ Pulse Width	7/10 t_{CY} -250	700		ns	
tPL	Port 2 I/O Setup to ALE	4/15 t_{CY} -200	160		ns	
t_{LP}	Port 2 I/O Hold to ALE	1/10 t_{CY} -100	40		ns	
t_{PV}	Port Output from ALE	3/10 t_{CY} +100		510	ns	
t_{CY}	Cycle Time	1/(f_{XTAL} x 15)	1.36		µs	
t_{0PRR}	T0 Rep Rate	3/15 t_{CY}	270		ns	

Notes:

1. Control Outputs CL = 80 pF
   BUS Outputs CL = 150pF
2. BUS High Impedance Load 20pF
3. Calculated values will be equal to or better than published 8049 values. f(t_{CY}) assumes 50% duty cycle on X1, X2.
4. Interrupt pin must remain low for at least 3 t_{CY} to ensure proper operation.

WAVEFORMS

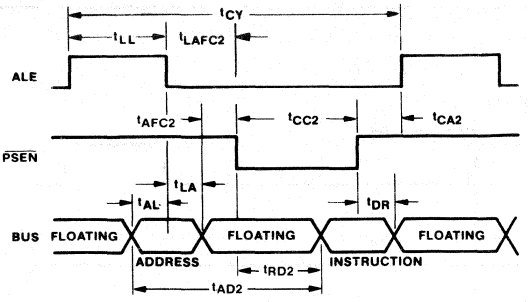

Instruction Fetch From External Program Memory

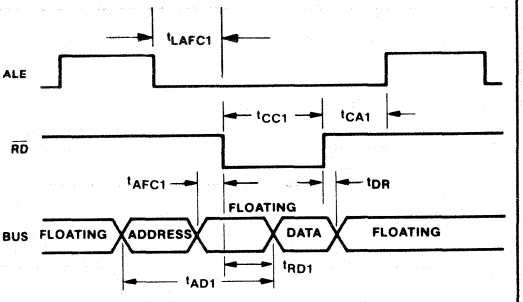

Read From External Data Memory

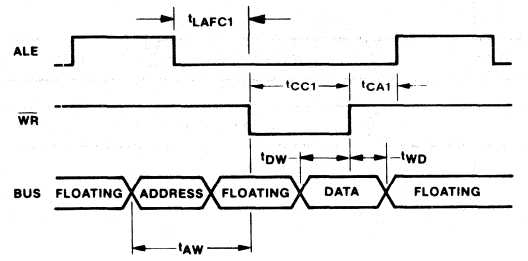

Write to External Data Memory

Input and Output for A.C. Tests

PORT 2 EXPANDER TIMING

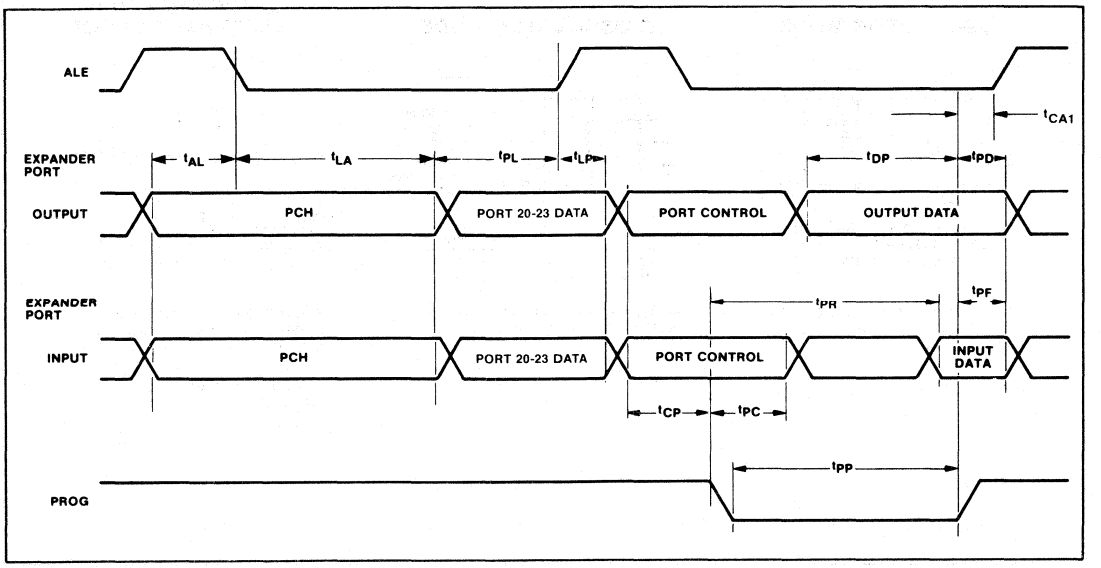

AFN-01784A-06

I/O PORT TIMING

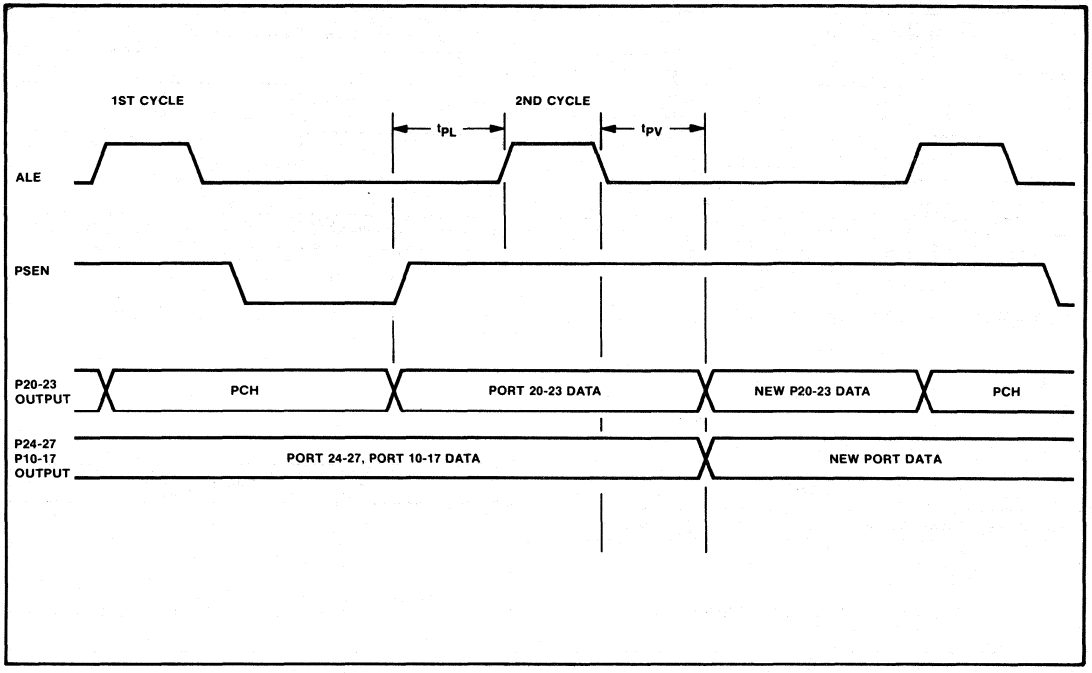

OSCILLATOR MODE

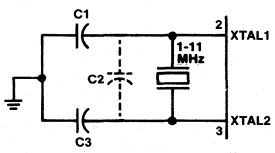

C1 = 5pF ± 1/2pF + STRAY < 5pF
C2 = CRYSTAL + STRAY < 8pF
C3 = 20pF ± 1pF + STRAY < 5pF

CRYSTAL SERIES RESISTANCE SHOULD BE LESS THAN 75 Ω AT 6MHz; LESS THAN 180 Ω AT 3.6MHz.

LC OSCILLATOR MODE

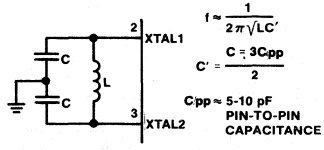

L	C	NOMINAL f
45 μH	20pF	5.2 MHz
120 μH	20pF	3.2 MHz

EACH C SHOULD BE APPROXIMATELY 20pF, INCLUDING STRAY CAPACITANCE.

DRIVING FROM EXTERNAL SOURCE

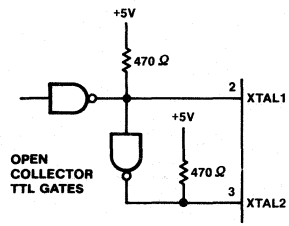

FOR THE 8049, XTAL1 MUST BE HIGH 35-65% OF THE PERIOD AND XTAL2 MUST BE HIGH 35-65% OF THE PERIOD.

RISE AND FALL TIMES MUST NOT EXCEED 20ns.

intel®

PRELIMINARY

80C49/80C39
CHMOS SINGLE-COMPONENT 8-BIT MICROCOMPUTER

- **80C49 Low Power Mask Programmable ROM**
- **80C39 Low Power, CPU only**

- **Pin-to-pin compatible with Intel's 8049H/8039HL**
- **1.36 μsec Instruction Cycle. All instructions 1 or 2 cycles**
- **Ability to maintain operation during AC power line interruptions**
- **Exit Idle mode with an external or internal interrupt signal**
- **Battery Operation**
- **3 power consumption selections**
  —Normal Operation: 15 mA @ 11 MHz @ 6V
  —Idle Mode: 500 μA @ 11 MHz @ 6V
  —Power down: 10 μA @ 2.0V
- **11 MHz, TTL compatible operation; V_{CC} = 5V±10%**
  CMOS compatible operation; V_{CC} = 5V±20%

Intel's 80C49/80C39 are low power, CHMOS versions of the popular MCS-48 HMOS family members. CHMOS is a technology built on HMOS II and features high resistivity P substrate, diffused N well, and scaled N and P channel devices. The 80C49/80C39 have been designed to provide low power consumption and high performance.

The 80C49 contains a 2K × 8 program memory, a 128 × 8 RAM data memory, 27 I/O lines, and an 8-bit timer/counter in addition to an on-board oscillator and clock circuits. For systems that require extra capability, the 80C49 can be expanded using CMOS external memories and MCS-80 and MCS-85 peripherals. The 80C39 is the equivalent of the 80C49 without program memory on-board.

The CHMOS design of the 80C49 opens new application areas that require battery operation, low power standby, wide voltage range, and the ability to maintain operation during AC power line interruptions. These applications include portable and hand-held instruments, telecommunications, consumer, and automotive.

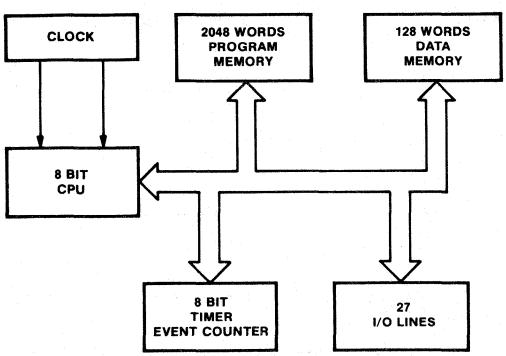

Figure 1. Block Diagram

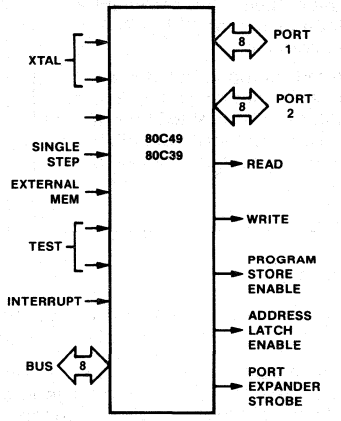

Figure 2. Logic Symbol

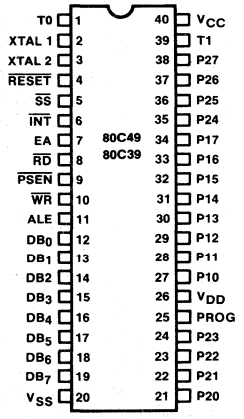

Figure 3. Pin Configuration

The following are trademarks of Intel Corporation and its affiliates and may be used only to identify Intel products: i, Intel, INTEL, INTELLEC, MCS, im, iCS, ICE, UPI, BXP, iSBC, iSBX, Insite, iRMX, System 2000, CREDIT, iRMX/80, MULTIBUS, PROMPT, Promware, Megachassis, Library Manager, MAIN MULTIMODULE, and the combination of MCS, ICE, iSBC, iRMX or iCS and a numerical suffix. © INTEL CORPORATION, 1981.

AFN-01985A
JULY 1981

Table 1. Pin Description

Symbol	Pin No.	Function
V_{SS}	20	Circuit GND potential
V_{DD}	26	Low power standby pin
V_{CC}	40	Main power supply; +5V during operation.
PROG	25	Output strobe for 8243 I/O expander.
P10-P17 Port 1	27-34	8-bit quasi-bidirectional port.
P20-P27 Port 2	21-24	8-bit quasi-bidirectional port.
	35-38	P20-P23 contain the four high order program counter bits during an external program memory fetch and serve as a 4-bit I/O expander bus for 8243.
DB0-DB7 BUS	12-19	True bidirectional port which can be written or read synchronously using the $\overline{RD}$, $\overline{WR}$ strobes. The port can also be statically latched.
		Contains the 8 low order program counter bits during an external program memory fetch, and receives the addressed instruction under the control of $\overline{PSEN}$. Also contains the address and data during an external RAM data store instruction, under control of ALE, $\overline{RD}$, and $\overline{WR}$.
T0	1	Input pin testable using the conditional transfer instructions JT0 and JNT0. T0 can be designated as a clock output using ENT0 CLK instruction.
T1	39	Input pin testable using the JT1, and JNT1 instructions. Can be designated the timer/counter input using the STRT CNT instruction.
$\overline{INT}$	6	Interrupt input. Initiates an interrupt if interrupt is enabled. Interrupt is disabled after a reset. Also testable with conditional jump instruction. (Active low)

Symbol	Pin No.	Function
$\overline{RD}$	8	Output strobe activated during a BUS read. Can be used to enable data onto the bus from an external device.
		Used as a read strobe to external data memory. (Active low)
$\overline{RESET}$	4	Input which is used to initialize the processor. (Active low) (Non TTL V_{IH})
$\overline{WR}$	10	Output strobe during a bus write. (Active low)
		Used as write strobe to external data memory.
ALE	11	Address latch enable. This signal occurs once during each cycle and is useful as a clock output.
		The negative edge of ALE strobes address into external data and program memory.
$\overline{PSEN}$	9	Program store enable. This output occurs only during a fetch to external program memory. (Active low)
$\overline{SS}$	5	Single step input can be used in conjunction with ALE to "single step" the processor through each instruction. (Active low)
EA	7	External access input which forces all program memory fetches to reference external memory. Useful for emulation and debug, and essential for testing and program verification. (Active high)
XTAL1	2	One side of crystal input for internal oscillator. Also input for external source. (Non TTL V_{IH})
XTAL2	3	Other side of crystal input.

IDLE MODE DESCRIPTION

The 80C49, when placed into Idle mode, keeps the oscillator, the internal timer and the external interrupt and counter pins functioning and maintains the internal register and RAM status.

To place the 80C49 in Idle mode, a command instruction (op code 01H) is executed. To terminate Idle mode, interrupts must be enabled and an interrupt signal generated. There are two interrupt sources that can restore normal operation. One is an external signal applied to the interrupt pin. The other is from the overflow of the timer/counter. When either interrupt is invoked the CPU is taken out of Idle mode and vectors to the interrupt's service routine address. A reset signal will also take the processor out of Idle mode. Along with the Idle mode, the standard MCS-48 power-down mode is still maintained.

Table 2. Instruction Set

Accumulator

Mnemonic	Description	Bytes	Cycles
ADD A, R	Add register to A	1	1
ADD A, @R	Add data memory to A	1	1
ADD A, # data	Add immediate to A	2	2
ADDC A, R	Add register with carry	1	1
ADDC A, @R	Add data memory with carry	1	1
ADDC A, # data	Add immediate with carry	2	2
ANL A, R	And register to A	1	1
ANL A, @R	And data memory to A	1	1
ANL A, # data	And immediate to A	2	2
ORL A, R	Or register to A	1	1
ORL A @R	Or data memory to A	1	1
ORL A, # data	Or immediate to A	2	2
XRL A, R	Exclusive or register to A	1	1
XRL A, @R	Exclusive or data memory to A	1	1
XRL, A, # data	Exclusive or immediate to A	2	2
INC A	Increment A	1	1
DEC A	Decrement A	1	1
CLR A	Clear A	1	1
CPL A	Complement A	1	1
DA A	Decimal adjust A	1	1
SWAP A	Swap nibbles of A	1	1
RL A	Rotate A left	1	1
RLC A	Rotate A left through carry	1	1
RR A	Rotate A right	1	1
RRC A	Rotate A right through carry	1	1

Input/Output

Mnemonic	Description	Bytes	Cycles
IN A, P	Input port to A	1	2
OUTL P, A	Output A to port	1	2
ANL P, # data	And immediate to port	2	2
ORL P, # data	Or immediate to port	2	2
INS A, BUS	Input BUS to A	1	2
OUTL BUS, A	Output A to BUS	1	2
ANL BUS, # data	And immediate to BUS	2	2
ORL BUS, # data	Or immediate to BUS	2	2
MOVD A,P	Input expander port to A	1	2
MOVD P, A	Output A to expander port	1	2
ANLD P, A	And A to expander port	1	2
ORLD P, A	Or A to expander port	1	2

Registers

Mnemonic	Description	Bytes	Cycles
INC R	Increment register	1	1
INC @R	Increment data memory	1	1
DEC R	Decrement register	1	1

Branch

Mnemonic	Description	Bytes	Cycles
JMP addr	Jump unconditional	2	2
JMPP @A	Jump indirect	1	2
DJNZ R, addr	Decrement register and skip	2	2
JC addr	Jump on carry = 1	2	2
JNC addr	Jump on carry = 0	2	2
JZ addr	Jump on A zero	2	2
JNZ addr	Jump on A not zero	2	2
JTO addr	Jump on TO = 1	2	2
JNTO addr	Jump on TO = 0	2	2
JT1 addr	Jump on T1 = 1	2	2
JNT1 addr	Jump on T1 = 0	2	2
JF0 addr	Jump on F0 = 1	2	2
JF1 addr	Jump on F1 = 1	2	2
JTF addr	Jump on timer flag	2	2
JN1 addr	Jump on INT = 0	2	2
JBb addr	Jump on accumulator bit	2	2

Subroutine

Mnemonic	Description	Bytes	Cycles
CALL addr	Jump to subroutine	2	2
RETR	Return	1	2
RETR	Return and restore status	1	2

Flags

Mnemonic	Description	Bytes	Cycles
CLR C	Clear carry	1	1
CPL C	Complement carry	1	1
CLR F0	CLear flag 0	1	1
CPL F0	Complement flag 0	1	1
CLR F1	Clear flag 1	1	1
CPL F1	Complement flag 1	1	1

Data Moves

Mnemonic	Description	Bytes	Cycles
MOV A, R	Move register to A	1	1
MOV A, @R	Move data memory to A	1	1
MOV A, # data	Move immediate to A	2	2
MOV R, A	Move A to register	1	1
MOV @R, A	Move A to data memory	1	1
MOV R, # data	Move immediate to register	2	2
MOV @R, #data	Move immediate to data memory	2	2
MOV A, PSW	Move PSW to A	1	1
MOV PSW, A	Move A to PSW	1	1
XCH A, R	Exchange A and register	1	1
XCH A, @R	Exchange A and data memory	1	1
XCHD A, @R	Exchange nibble of A and register	1	1
MOVX A, @R	Move external data memory to A	1	2
MOVX @R, A	Move A to external data memory	1	2
MOVP A, @A	Move to A from current page	1	2
MOVP3 A, @	Move to A from page 3	1	2

Timer/Counter

Mnemonic	Description	Bytes	Cycles
MOV A, T	Read timer/counter	1	1
MOV T, A	Load timer/counter	1	1
STRT T	Start timer	1	1
STRT CNT	Start counter	1	1
STOP TCNT	Stop timer/counter	1	1
EN TCNT1	Enable timer/counter interrupt	1	1
DIS TCNT1	Disable timer/counter interrupt	1	1

Control

Mnemonic	Description	Bytes	Cycles
EN 1	Enable external interrupt	1	1
DIS 1	Disable external interrupt	1	1
SEL RB0	Select register bank 0	1	1
SEL RB1	Select register bank 1	1	1
SEL MB0	Select memory bank 0	1	1
SEL MB1	Select memory bank 1	1	1
ENT 0 CLK	Enable clock output on T0	1	1

Mnemonic	Description	Bytes	Cycles
NOP	No operation	1	1
IDL	Select Idle operation	1	1

ABSOLUTE MAXIMUM RATINGS*

Ambient Temperature Under Bias ..... 0°C to 70°C
Storage Temperature ..... -65°C to + 150°C
Voltage On Any Pin With Respect to Ground ..... -0.5V to +7V
Power Dissipation ..... 1.5 Watt

NOTICE: Stresses above those listed under "Absolute Maximum Ratings" may cause permanent damage to the device. This is a stress rating only and functional operation of device at these or any other conditions above those indicated in the operational sections of this specification is not implied.

D.C. CHARACTERISTICS (T_A = 0°C to 70°C, $V_{CC} = V_{DD} = 5V \pm 10\%$, $V_{SS} = 0V$)

Symbol	Parameter	Limits			Unit	Test Conditions
		Min	Typ	Max		
V_{IL}	Input Low Voltage (All Except $\overline{RESET}$, X1, X2)	-.5		.8	V	
V_{IL1}	Input Low Voltage ($\overline{RESET}$, X1, X2)	-.5		.6	V	
V_{IH}	Input High Voltage (All Except XTAL1, XTAL2, $\overline{RESET}$)	2.0		V_{CC}	V	
V_{IH1}	Input High Voltage (X1, X2, $\overline{RESET}$)	3.8		V_{CC}	V	
V_{OL}	Output Low Voltage (BUS)			.45	V	I_{OL} = 2.0 mA
V_{OL1}	Output Low Voltage ($\overline{RD}$, $\overline{WR}$, $\overline{PSEN}$, ALE)			.45	V	I_{OL} = 1.8 mA
V_{OL2}	Output Low Voltage (PROG)			.45	V	I_{OL} = 1.0 mA
V_{OL3}	Output Low Voltage (All Other Outputs)			.45	V	I_{OL} = 1.6 mA
V_{OH}	Output High Voltage (BUS)	2.4			V	I_{OH} = -400 μA
V_{OH1}	Output High Voltage ($\overline{RD}$, $\overline{WR}$, $\overline{PSEN}$, ALE)	2.4			V	I_{OH} = -100 μA
V_{OH2}	Output High Voltage (All Other Outputs)	2.4			V	I_{OH} = -40 μA
I_{L1}	Input Leakage Current (T1, $\overline{INT}$)			± 10	μA	$V_{SS} \leq V_{IN} \leq V_{CC}$
I_{LI1}	Input Leakage Current (P10-P17, P20-P27, EA, $\overline{SS}$)			-500	μA	$V_{SS} + .45 \leq V_{IN} \leq V_{CC}$
I_{L0}	Output Leakage Current (BUS, TO) (High Impedance State)			± 10	μA	$V_{SS} + .45 \leq V_{IN} \leq V_{CC}$
I_{DD}	V_{DD} Supply Current			10	μA	V_{DD} = 2.0V
I_{CC}	Supply Current			15 8.5 1.5	mA mA mA	f = 11 MHz f = 6 MHz f = 1 MHz
I_{IDLE}	Idle Mode Current			500 300 60	μA μA μA	f = 11MHz f = 6 MHz f = 1 MHz

A.C. CHARACTERISTICS (T_A = 0°C to 70°C, V_{CC} = V_{DD} = 5V ± 10%, V_{SS} = 0V)

Symbol	Parameter	f (t_{CY})	11 MHz		Unit	Conditions (Note 1)
			Min	Max		
t_{LL}	ALE Pulse Width	7/30 t_{CY} -170	150		ns	
t_{AL}	Addr Setup to ALE	1/5 t_{CY} -110	160		ns	
t_{LA}	Addr Hold from ALE	1/15 t_{CY} -40	50		ns	
t_{CC1}	Control Pulse Width ($\overline{RD}$, $\overline{WR}$)	1/2 t_{CY} -200	480		ns	
t_{CC2}	Control Pulse Width ($\overline{PSEN}$)	2/5 t_{CY} -200	350		ns	
t_{DW}	Data Setup before $\overline{WR}$	13/30 t_{CY} -200	390		ns	
t_{WD}	Data Hold after $\overline{WR}$	1/15 t_{CY} -50	40		ns	(Note 2)
t_{DR}	Data Hold ($\overline{RD}$, $\overline{PSEN}$)	1/10 t_{CY} -30	0	110	ns	
t_{RD1}	$\overline{RD}$ to Data in	2/5 t_{CY} -200		350	ns	
t_{RD2}	$\overline{PSEN}$ to Data in	3/10 t_{CY} -200		210	ns	
t_{AW}	Addr Setup to $\overline{WR}$	2/5 t_{CY} -150	400		ns	
t_{AD1}	Addr Setup to Data ($\overline{RD}$)	23/30 t_{CY} -250		800	ns	
t_{AD2}	Addr Setup to Data ($\overline{PSEN}$)	3/5 t_{CY} -250		570	ns	
t_{AFC1}	Addr Float to $\overline{RD}$, $\overline{WR}$	2/15 t_{CY} -40	140		ns	
t_{AFC2}	Addr Float to $\overline{PSEN}$	1/30 t_{CY} -40	10		ns	
t_{LAFC1}	ALE to Control, ($\overline{RD}$, $\overline{WR}$)	1/5 t_{CY} -75	200		ns	
t_{LAFC2}	ALE to Control ($\overline{PSEN}$)	1/10 t_{CY} -75	60		ns	
t_{CA1}	Control to ALE ($\overline{RD}$, $\overline{WR}$, $\overline{PROG}$)	1/15 t_{CY} -40	50		ns	
t_{CA2}	Control to ALE ($\overline{PSEN}$)	4/15 t_{CY} -40	320		ns	
t_{CP}	Port Control Setup to $\overline{PROG}$	2/15 t_{CY} -80	100		ns	
t_{PC}	Port Control Hold to $\overline{PROG}$	4/15 t_{CY} -200	160		ns	
t_{PR}	$\overline{PROG}$ to P2 Input Valid	6/10 t_{CY} -120		700	ns	
t_{PF}	Input Data Hold from $\overline{PROG}$	1/10 t_{CY}	0	140	ns	
t_{DP}	Output Data Setup	2/5 t_{CY} -150	400		ns	
t_{PD}	Output Data Hold	1/10 t_{CY} -50	90		ns	
t_{PP}	$\overline{PROG}$ Pulse Width	7/10 t_{CY} -250	700		ns	
tPL	Port 2 I/O Setup to ALE	4/15 t_{CY} -200	160		ns	
t_{LP}	Port 2 I/O Hold to ALE	1/10 t_{CY} -100	40		ns	
t_{PV}	Port Output from ALE	3/10 t_{CY} +100		510	ns	
t_{CY}	Cycle Time	1/(f_{XTAL} x 15)	1.36		µs	
t_{0PRR}	T0 Rep Rate	3/15 t_{CY}	270		ns	

Notes:

1. Control Outputs CL = 80 pF
   BUS Outputs CL = 150pF
2. BUS High Impedance Load 20pF
3. Interrupt pin must remain low for at least 3 t_{cy} to ensure proper operation.

WAVEFORMS

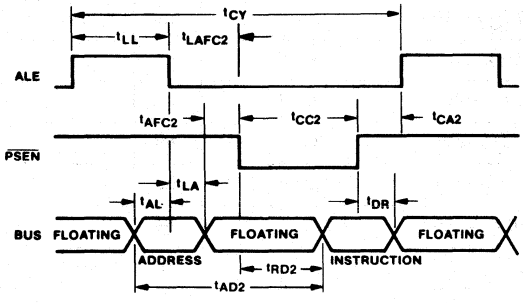

Instruction Fetch From External Program Memory

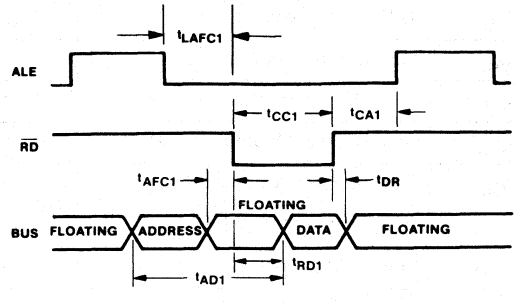

Read From External Data Memory

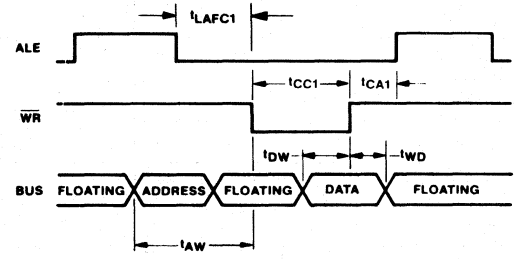

Write to External Data Memory

Input and Output for A.C. Tests

PORT 2 EXPANDER TIMING

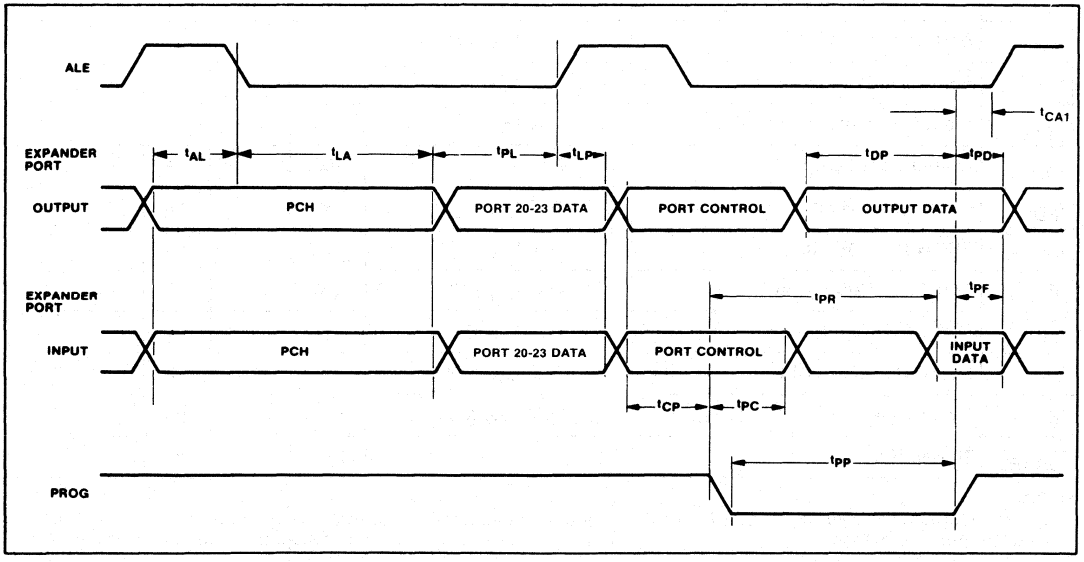

AFN-01985A

I/O PORT TIMING

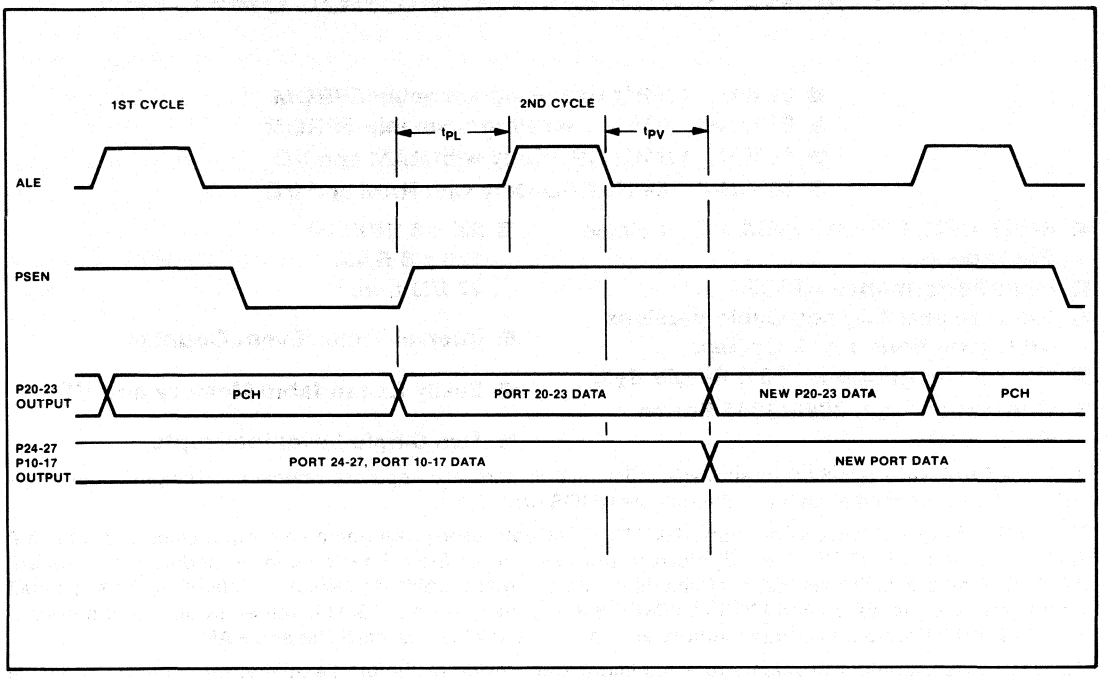

OSCILLATOR MODE

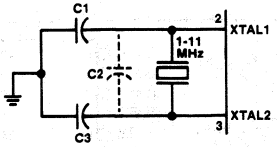

C1 = 5pF ± 1/2pF + STRAY < 5pF
C2 = CRYSTAL + STRAY < 8pF
C3 = 20pF ± 1pF + STRAY < 5pF

CRYSTAL SERIES RESISTANCE SHOULD BE LESS THAN 75 Ω AT 6MHz; LESS THAN 180 Ω AT 3.6MHz.

LC OSCILLATOR MODE

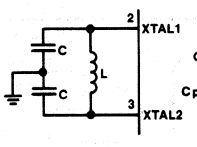

$$f \approx \frac{1}{2\pi\sqrt{LC'}}$$

$$C' = \frac{C = 3Cpp}{2}$$

Cpp ≈ 5-10 pF PIN-TO-PIN CAPACITANCE

L	C	NOMINAL f
45 μH	20pF	5.2 MHz
120 μH	20pF	3.2 MHz

EACH C SHOULD BE APPROXIMATELY 20pF, INCLUDING STRAY CAPACITANCE.

DRIVING FROM EXTERNAL SOURCE

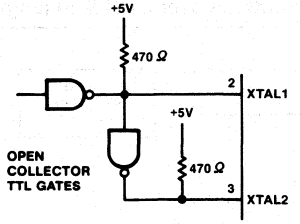

FOR THE 8049, XTAL1 MUST BE HIGH 35-65% OF THE PERIOD AND XTAL2 MUST BE HIGH 35-65% OF THE PERIOD.

RISE AND FALL TIMES MUST NOT EXCEED 20ns.

8749H/8749H-8/8039H/8039H-8
HMOS SINGLE-CHIP EPROM MICROCOMPUTER

- **8749H 11MHz User Programmable EPROM**
- **8749H-8 6MHz User Programmable EPROM**
- **8039H 11MHz CPU Only with RAM and I/O**
- **8039H-8 6MHz CPU Only with RAM and I/O**

- **8-BIT CPU, EPROM, RAM, I/O in Single Package**
- **High Performance HMOS**
- **1.4 μsec and 2.5 μsec Cycle Versions All Instructions 1 or 2 Cycles.**
- **Over 90 instructions: 70% Single Byte**
- **Compatible with 8080/8085 Series Peripherals**
- **2K x 8 EPROM 128 x 8 RAM 27 I/O Lines**
- **Interval Timer/Event Counter**
- **Easily Expandable Memory and I/O**
- **Two Single Level Interrupts**

The Intel® 8749H/8749H-8 are totally self-sufficient, 8-bit parallel computers fabricated on single silicon chips using Intel's advanced N-channel silicon gate HMOS process.

The 8749H/8749H-8 contains on-chip a 2K X 8 UV-erasable, user-programmable program memory, a 128 X 8 RAM data memory, 27 I/O lines, 2 interrupt sources, and an 8-bit timer/counter in addition to on-board oscillator and clock circuits. For systems that require extra capability the 8749H/8749H-8 can be expanded using standard memories and MCS-80®/MCS-85® peripherals. The 8039H is the equivalent of the 8749H/8749H-8/8049H without program memory and can be used with external ROM and RAM.

To reduce development problems to a minimum and provide maximum flexibility, three interchangeable pin-compatible versions of this single component microcomputer exist: the 8749H with user-programmable and erasable EPROM program memory, the 8049H with factory-programmed mask ROM program memory for low cost, high volume production, and the 8039H without program memory for use with external program memories.

These microcomputers are designed to be efficient controllers as well as arithmetic processors. They have extensive bit handling capability as well as facilities for both binary and BCD arithmetic. Efficient use of program memory results from an instruction set consisting mostly of single byte instructions and no instructions over 2 bytes in length.

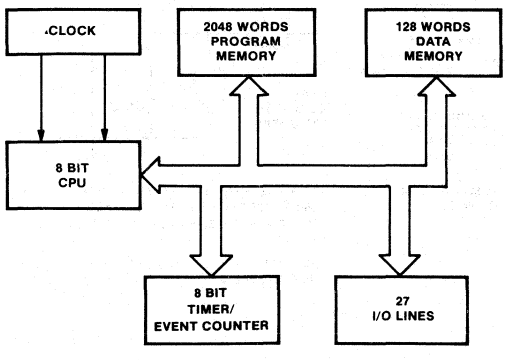

Figure 1. Block Diagram

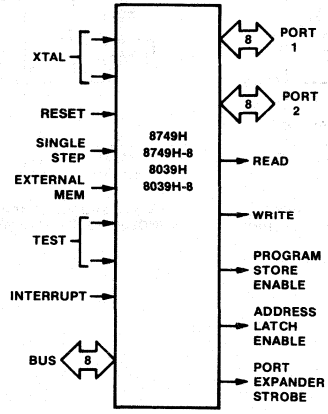

Figure 2. Logic Symbol

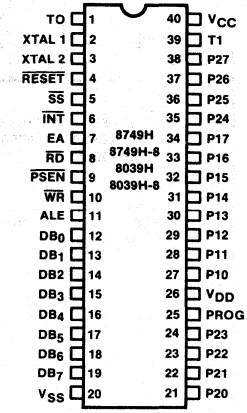

Figure 3. Pin Configuration

Intel Corporation Assumes No Responsibility for the Use of Any Circuitry Other Than Circuitry Embodied in an Intel Product. No Other Circuit Patent Licenses are Implied.
INTEL CORPORATION, 1981

Table 1. Pin Description

Symbol	Pin No.	Function
V_{SS}	20	Circuit GND Potential
V_{DD}	26	Programming power supply; +20V during program, +5V during operation.
V_{CC}	40	Main power supply; +5V during operation and programming.
PROG	25	Program pulse (+18V) input pin during 8749H programming. Output strobe for 8243 I/O expander.
P10-P17 Port 1	27-34	8-bit quasi-bidirectional port.
P20-P27	21-24	8-bit quasi-bidirectional port.
Port 2	35-38	P20-P23 contain the four high order program counter bits during an external program memory fetch and serve as a 4-bit I/O expander bus for 8243.
DB_0-DB_7 BUS	12-19	True bidirectional port which can be written or read synchronously using the $\overline{RD}$, $\overline{WR}$ strobes. The port can also be statically latched. Contains the 8 low order program counter bits during an external program memory fetch, and receives the addressed instruction under the control of $\overline{PSEN}$. Also contains the address and data during an external RAM data store instruction, under control of ALE, $\overline{RD}$, and $\overline{WR}$.
T0	1	Input pin testable using the conditional transfer instructions JT0 and JNT0. T0 can be designated as a clock output using ENT0 CLK instruction. T0 is also used during programming.
T1	39	Input pin testable using the JT1, and JNT1 instructions. Can be designated the timer/counter input using the STRT CNT instruction.
$\overline{INT}$	6	Interrupt input. Initiates an interrupt if interrupt is enabled. Interrupt is disabled after a reset. Also testable with conditional jump instruction. (Active low)

Symbol	Pin No.	Function
$\overline{RD}$	8	Output strobe activated during a BUS read. Can be used to enable data onto the bus from an external device. Used as a read strobe to external data memory. (Active low)
$\overline{RESET}$	4	Input which is used to initialize the processor. Also used during PROM programming verification, and power down. (Active low) (Non TTL V_{IH})
$\overline{WR}$	10	Output strobe during a bus write. (Active low) Used as write strobe to external data memory.
ALE	11	Address latch enable. This signal occurs once during each cycle and is useful as a clock output. The negative edge of ALE strobes address into external data and program memory.
$\overline{PSEN}$	9	Program store enable. This output occurs only during a fetch to external program memory. (Active low)
$\overline{SS}$	5	Single step input can be used in conjunction with ALE to "single step" the processor through each instruction. (Active low)
EA	7	External access input which forces all program memory fetches to reference external memory. Useful for emulation and debug, and essential for testing and program verification. (Active high)
XTAL1	2	One side of crystal input for internal oscillator. Also input for external source. (Non TTL V_{IH})
XTAL2	3	Other side of crystal input.

Table 2. Instruction Set

Accumulator

Mnemonic	Description	Bytes	Cycles
ADD A, R	Add register to A	1	1
ADD A, @R	Add data memory to A	1	1
ADD A, # data	Add immediate to A	2	2
ADDC A, R	Add register with carry	1	1
ADDC A, @R	Add data memory with carry	1	1
ADDC A, # data	Add immediate with carry	2	2
ANL A, R	And register to A	1	1
ANL A, @R	And data memory to A	1	1
ANL A, # data	And immediate to A	2	2
ORL A, R	Or register to A	1	1
ORL A @R	Or data memory to A	1	1
ORL A, # data	Or immediate to A	2	2
XRL A, R	Exclusive or register to A	1	1
XRL A, @R	Exclusive or data memory to A	1	1
XRL, A, # data	Exclusive or immediate to A	2	2
INC A	Increment A	1	1
DEC A	Decrement A	1	1
CLR A	Clear A	1	1
CPL A	Complement A	1	1
DA A	Decimal adjust A	1	1
SWAP A	Swap nibbles of A	1	1
RL A	Rotate A left	1	1
RLC A	Rotate A left through carry	1	1
RR A	Rotate A right	1	1
RRC A	Rotate A right through carry	1	1

Input/Output

Mnemonic	Description	Bytes	Cycles
IN A, P	Input port to A	1	2
OUTL P, A	Output A to port	1	2
ANL P, # data	And immediate to port	2	2
ORL P, # data	Or immediate to port	2	2
INS A, BUS	Input BUS to A	1	2
OUTL BUS, A	Output A to BUS	1	2
ANL BUS, # data	And immediate to BUS	2	2
ORL BUS, # data	Or immediate to BUS	2	2
MOVD A,P	Input expander port to A	1	2
MOVD P, A	Output A to expander port	1	2
ANLD P, A	And A to expander port	1	2
ORLD P, A	Or A to expander port	1	2

Registers

Mnemonic	Description	Bytes	Cycles
INC R	Increment register	1	1
INC @R	Increment data memory	1	1
DEC R	Decrement register	1	1

Branch

Mnemonic	Description	Bytes	Cycles
JMP addr	Jump unconditional	2	2
JMPP @A	Jump indirect	1	2
DJNZ R, addr	Decrement register and skip	2	2
JC addr	Jump on carry = 1	2	2
JNC addr	Jump on carry = 0	2	2
JZ addr	Jump on A zero	2	2
JNZ addr	Jump on A not zero	2	2
JT0 addr	Jump on TO = 1	2	2
JNT0 addr	Jump on TO = 0	2	2
JT1 addr	Jump on T1 = 1	2	2
JNT1 addr	Jump on T1 = 0	2	2
JF0 addr	Jump on F0 = 1	2	2
JF1 addr	Jump on F1 = 1	2	2
JTF addr	Jump on timer flag	2	2
JN1 addr	Jump on INT = 0	2	2
JBb addr	Jump on accumulator bit	2	2

Subroutine

Mnemonic	Description	Bytes	Cycles
CALL addr	Jump to subroutine	2	2
RETR	Return	1	2
RETR	Return and restore status	1	2

Flags

Mnemonic	Description	Bytes	Cycles
CLR C	Clear carry	1	1
CPL C	Complement carry	1	1
CLR F0	CLear flag 0	1	1
CPL F0	Complement flag 0	1	1
CLR F1	Clear flag 1	1	1
CPL F1	Complement flag 1	1	1

Data Moves

Mnemonic	Description	Bytes	Cycles
MOV A, R	Move register to A	1	1
MOV A, @R	Move data memory to A	1	1
MOV A, # data	Move immediate to A	2	2
MOV R, A	Move A to register	1	1
MOV @R, A	Move A to data memory	1	1
MOV R, # data	Move immediate to register	2	2
MOV @R, #data	Move immediate to data memory	2	2
MOV A, PSW	Move PSW to A	1	1
MOV PSW, A	Move A to PSW	1	1
XCH A, R	Exchange A and register	1	1
XCH A, @R	Exchange A and data memory	1	1
XCHD A, @R	Exchange nibble of A and register	1	1
MOVX A, @R	Move external data memory to A	1	2
MOVX @R, A	Move A to external data memory	1	2
MOVP A, @A	Move to A from current page	1	2
MOVP3 A, @	Move to A from page 3	1	2

Timer/Counter

Mnemonic	Description	Bytes	Cycles
MOV A, T	Read timer/counter	1	1
MOV T, A	Load timer/counter	1	1
STRT T	Start timer	1	1
STRT CNT	Start counter	1	1
STOP TCNT	Stop timer/counter	1	1
EN TCNT1	Enable timer/counter interrupt	1	1
DIS TCNT1	Disable timer/counter interrupt	1	1

Control

Mnemonic	Description	Bytes	Cycles
EN 1	Enable external interrupt	1	1
DIS 1	Disable external interrupt	1	1
SEL RB0	Select register bank 0	1	1
SEL RB1	Select register bank 1	1	1
SEL MB0	Select memory bank 0	1	1
SEL MB1	Select memory bank 1	1	1
ENT 0 CLK	Enable clock output on T0	1	1

Mnemonic	Description	Bytes	Cycles
NOP	No operation	1	1

Mnemonics® Intel Corporation, 1976.

ABSOLUTE MAXIMUM RATINGS*

Ambient Temperature Under Bias ..... 0°C to 70°C
Storage Temperature ..... -65°C to + 150°C
Voltage On Any Pin With Respect to Ground ..... -0.5V to +7V
Power Dissipation ..... 1.5 Watt

*NOTICE: Stresses above those listed under "Absolute Maximum Ratings" may cause permanent damage to the device. This is a stress rating only and functional operation of device at these or any other conditions above those indicated in the operational sections of this specification is not implied.

D.C. CHARACTERISTICS (T_A = 0°C to 70°C, V_{CC} = V_{DD} = 5V ± 10%, V_{SS} = 0V)

Symbol	Parameter	Limits			Unit	Test Conditions
		Min	Typ	Max		
V_{IL}	Input Low Voltage (All Except $\overline{RESET}$, X1, X2)	-.5		.8	V	
V_{IL1}	Input Low Voltage ($\overline{RESET}$, X1, X2)	-.5		.6	V	
V_{IH}	Input High Voltage (All Except XTAL1, XTAL2, $\overline{RESET}$)	2.0		V_{CC}	V	
V_{IH1}	Input High Voltage (X1, X2, $\overline{RESET}$)	3.8		V_{CC}	V	
V_{OL}	Output Low Voltage (BUS)			.45	V	I_{OL} = 2.0 mA
V_{OL1}	Output Low Voltage ($\overline{RD}$, $\overline{WR}$, $\overline{PSEN}$, ALE)			.45	V	I_{OL} = 1.8 mA
V_{OL2}	Output Low Voltage (PROG)			.45	V	I_{OL} = 1.0 mA
V_{OL3}	Output Low Voltage (All Other Outputs)			.45	V	I_{OL} = 1.6 mA
V_{OH}	Output High Voltage (BUS)	2.4			V	I_{OH} = -400 μA
V_{OH1}	Output High Voltage ($\overline{RD}$, $\overline{WR}$, $\overline{PSEN}$, ALE)	2.4			V	I_{OH} = -100 μA
V_{OH2}	Output High Voltage (All Other Outputs)	2.4			V	I_{OH} = -40 μA
I_{L1}	Input Leakage Current (T1, $\overline{INT}$)			± 10	μA	$V_{SS} \leq V_{IN} \leq V_{CC}$
I_{LI1}	Input Leakage Current (P10-P17, P20-P27, EA, $\overline{SS}$)			-500	μA	V_{SS} + .45 $\leq V_{IN} \leq V_{CC}$
I_{L0}	Output Leakage Current (BUS, TO) (High Impedance State)			± 10	μA	V_{SS} + .45 $\leq V_{IN} \leq V_{CC}$
I_{DD}	V_{DD} Supply Current		5	10	mA	
I_{DD} + I_{CC}	Total Supply Current		50	110	mA	

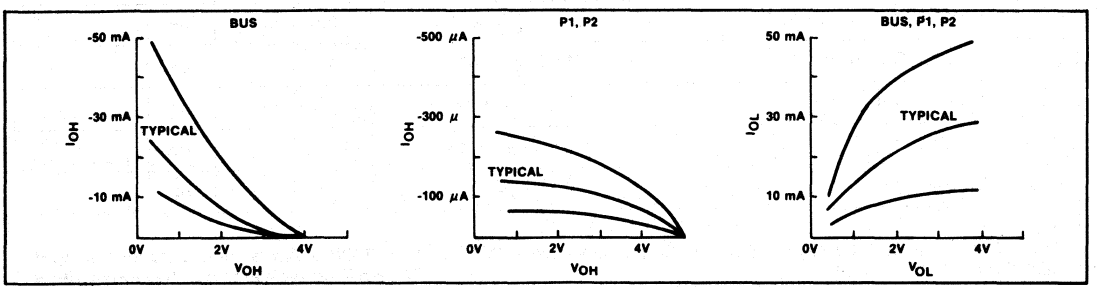

A.C. CHARACTERISTICS (T_A = 0°C to 70°C, V_{CC} = V_{DD} = 5V ± 10%, V_{SS} = 0V)

Symbol	Parameter	f (t_{CY})	11 MHz		Unit	Conditions (Note 1)
			Min	Max		
t_{LL}	ALE Pulse Width	7/30 t_{CY} -170	150		ns	
t_{AL}	Addr Setup to ALE	1/5 t_{CY} -110	160		ns	
t_{LA}	Addr Hold from ALE	1/15 t_{CY} -40	50		ns	
t_{CC1}	Control Pulse Width ($\overline{RD}$, $\overline{WR}$)	1/2 t_{CY} -200	480		ns	
t_{CC2}	Control Pulse Width ($\overline{PSEN}$)	2/5 t_{CY} -200	350		ns	
t_{DW}	Data Setup before $\overline{WR}$	13/30 t_{CY} -200	390		ns	
t_{WD}	Data Hold after $\overline{WR}$	1/15 t_{CY} -50	40		ns	(Note 2)
t_{DR}	Data Hold ($\overline{RD}$, $\overline{PSEN}$)	1/10 t_{CY} -30	0	110	ns	
t_{RD1}	$\overline{RD}$ to Data in	2/5 t_{CY} -200		350	ns	
t_{RD2}	$\overline{PSEN}$ to Data in	3/10 t_{CY} -200		210	ns	
t_{AW}	Addr Setup to $\overline{WR}$	2/5 t_{CY} -150	400		ns	
t_{AD1}	Addr Setup to Data ($\overline{RD}$)	23/30 t_{CY} -250		800	ns	
t_{AD2}	Addr Setup to Data ($\overline{PSEN}$)	3/5 t_{CY} -250		570	ns	
t_{AFC1}	Addr Float to $\overline{RD}$, $\overline{WR}$	2/15 t_{CY} -40	140		ns	
t_{AFC2}	Addr Float to $\overline{PSEN}$	1/30 t_{CY} -40	10		ns	
t_{LAFC1}	ALE to Control, ($\overline{RD}$, $\overline{WR}$)	1/5 t_{CY} -75	200		ns	
t_{LAFC2}	ALE to Control ($\overline{PSEN}$)	1/10 t_{CY} -75	60		ns	
t_{CA1}	Control to ALE ($\overline{RD}$, $\overline{WR}$, $\overline{PROG}$)	1/15 t_{CY} -40	50		ns	
t_{CA2}	Control to ALE ($\overline{PSEN}$)	4/15 t_{CY} -40	320		ns	
t_{CP}	Port Control Setup to $\overline{PROG}$	2/15 t_{CY} -80	100		ns	
t_{PC}	Port Control Hold to $\overline{PROG}$	4/15 t_{CY} -200	160		ns	
t_{PR}	$\overline{PROG}$ to P2 Input Valid	6/10 t_{CY} -120		700	ns	
t_{PF}	Input Data Hold from $\overline{PROG}$	1/10 t_{CY}	0	140	ns	
t_{DP}	Output Data Setup	2/5 t_{CY} -150	400		ns	
t_{PD}	Output Data Hold	1/10 t_{CY} -50	90		ns	
t_{PP}	$\overline{PROG}$ Pulse Width	7/10 t_{CY} -250	700		ns	
tPL	Port 2 I/O Setup to ALE	4/15 t_{CY} -200	160		ns	
t_{LP}	Port 2 I/O Hold to ALE	1/10 t_{CY} -100	40		ns	
t_{PV}	Port Output from ALE	3/10 t_{CY} +100		510	ns	
t_{CY}	Cycle Time	1/(f_{XTAL} x 15)	1.36		µs	2.5 µS t_{CY}MIN. FOR 8749H-8
t_{0PRR}	T0 Rep Rate	3/15 t_{CY}	270		ns	

Notes:

1. Control Outputs CL = 80 pF
   BUS Outputs CL = 150pF
   When driven by an ext. clock, AC specs are based on 50% duty cycles.
2. BUS High Impedance Load 20pF

The 8749H exhibits some sensitivity to light. The RAM storage area can be altered when exposed to light. When operating the 8749H, the window must be covered with an opaque material.

AFN-01930A-5

WAVEFORMS

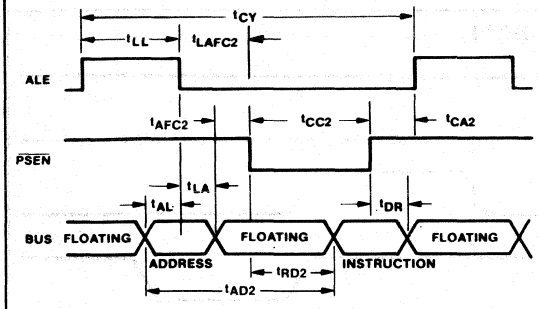

Instruction Fetch From External Program Memory

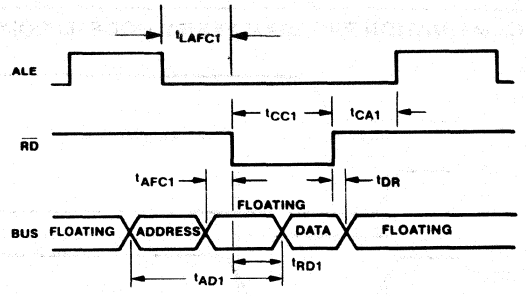

Read From External Data Memory

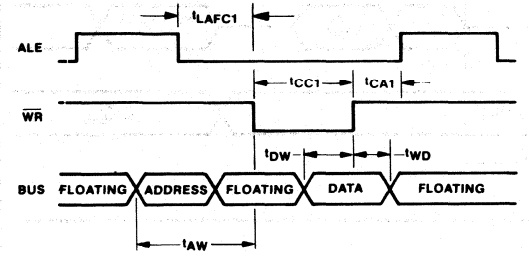

Write to External Data Memory

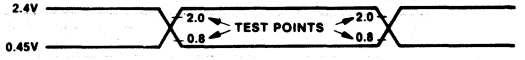

Input and Output for A.C. Tests

PORT 2 EXPANDER TIMING

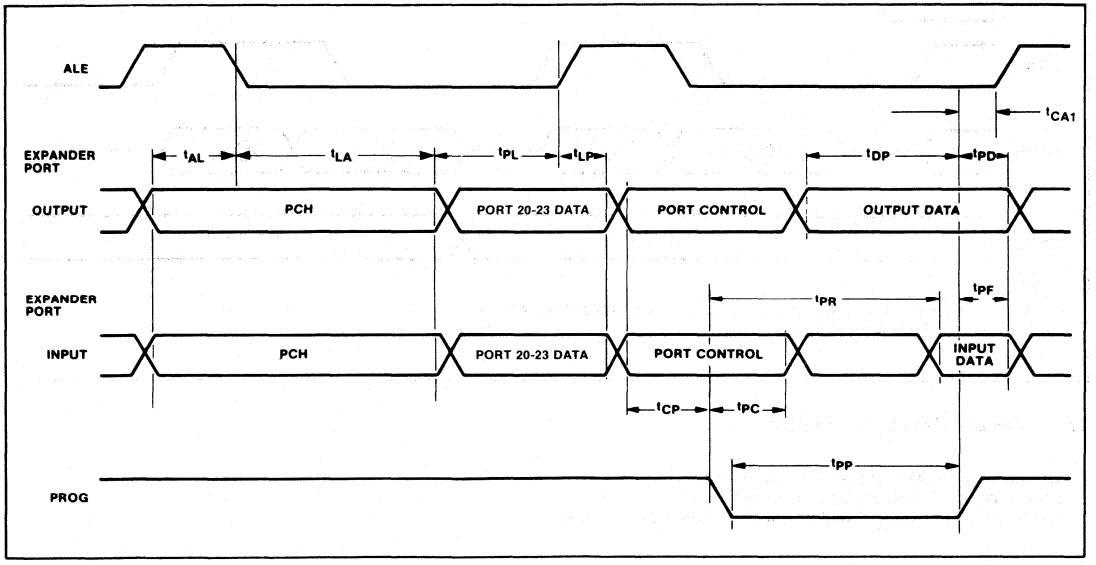

WAVEFORMS

COMBINATION PROGRAM/VERIFY MODE (EPROM's ONLY)

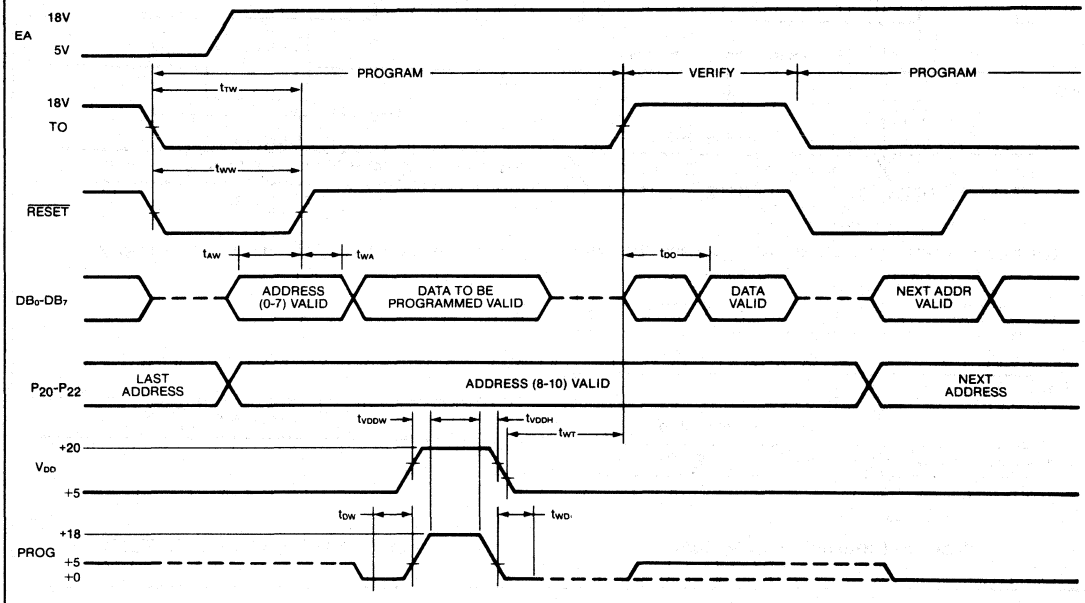

VERIFY MODE (ROM/EPROM)

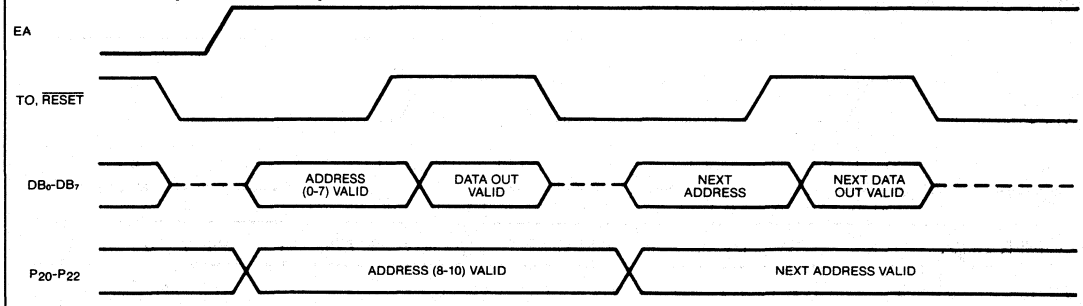

NOTES:
1. PROG MUST FLOAT IF EA IS LOW (i.e., ≠ 18V).
2. X_1 AND X_2 DRIVEN BY 3 MHz CLOCK WILL GIVE 5μsec t_{CY}. THIS IS ACCEPTABLE FOR —8 PARTS AS WELL AS STANDARD PARTS.

The 8749H EPROM can be programmed by:

Universal PROM Programmer (UPP series) peripheral of the Intellec® Development System with a UPP-848 Personality Card and a UPP-549 adapter card.

CRYSTAL OSCILLATOR MODE

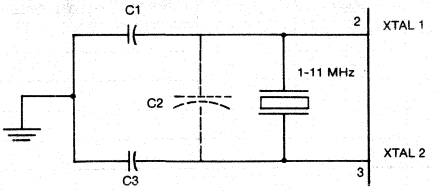

C1 = 5pF ± ½pF + STRAY < 5 pF
C2 = CRYSTAL ± STRAY < 8 pF
C3 = 20pF ± 1pF ± STRAY < 5 pF

CRYSTAL SERIES RESISTANCE SHOULD BE LESS THAN 75Ω AT 6 MHz; LESS THAN 180Ω AT 3.6 MHz.

LC OSCILLATOR MODE

L	C	NOMINAL f
45 μH	20 pF	5.2 MHz
120 μH	20 pF	3.2 MHz

$f \approx \frac{1}{2\pi\sqrt{LC'}}$

$C' = \frac{C + 3C_{PP}}{2}$

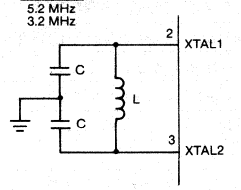

$C_{PP} \approx 5 - 10$ pF PIN-TO-PIN CAPACITANCE

EACH C SHOULD BE APPROXIMATELY 20 pF, INCLUDING STRAY CAPACITANCE.

DRIVING FROM EXTERNAL SOURCE

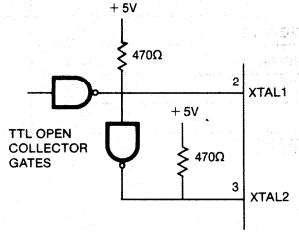

FOR XTAL 1 AND XTAL 2 DEFINE "HIGH" AS VOLTAGES ABOVE 1.6V AND "LOW" AS VOLTAGES BELOW 1.6V. THE DUTY CYCLE REQUIREMENTS FOR EXTERNALLY DRIVING XTAL 1 AND XTAL 2 USING THE CIRCUIT SHOWN ABOVE ARE AS FOLLOWS:

FOR THE 8749H, XTAL 1 MUST BE HIGH 45-50% OF THE PERIOD AND XTAL 2 MUST BE HIGH 50-55% OF THE PERIOD.
RISE AND FALL TIMES MUST NOT EXCEED 20 ns.

PROGRAMMING, VERIFYING, AND ERASING THE 8749H EPROM

Programming Verification

In brief, the programming process consists of: activating the program mode, applying an address, latching the address, applying data, and applying a programming pulse. Each word is programmed completely before moving on to the next and is followed by a verification step. The following is a list of the pins used for programming and a description of their functions:

Pin	Function
XTAL 1	Clock Input (1 to 3MHz)
Reset	Initialization and Address Latching
Test 0	Selection of Program or Verify Mode
EA	Activation of Program/Verify Modes
BUS	Address and Data Input Data Output During Verify
P20-22	Address Input
V_{DD}	Programming Power Supply
PROG	Program Pulse Input

WARNING:

An attempt to program a missocketed 8749H will result in severe damage to the part. An indication of a properly socketed part is the appearance of the ALE clock output. The lack of this clock may be used to disable the programmer.

The Program/Verify sequence is:

1. $V_{DD} = 5V$, Clock applied or internal oscillator operating, $\overline{RESET} = 0V$, TEST 0 = 5V, EA = 5V, BUS and PROG floating. P10 and P11 must be tied to ground.
2. Insert 8749H in programming socket.
3. TEST 0 = 0V (select program mode)
4. EA = 18V (activate program mode)
5. Address applied to BUS and P20-22
6. $\overline{RESET} = 5V$ (latch address)
7. Data applied to BUS
8. $V_{DD} = 20V$ (programming power)
9. PROG = 0V followed by one 50ms pulse to 18V
10. $V_{DD} = 5V$
11. TEST 0 = 5V (verify mode)
12. Read and verify data on BUS
13. TEST 0 = 0V
14. $\overline{RESET} = 0V$ and repeat from step 5
15. Programmer should be at conditions of step 1 when 8749H is removed from socket.

A.C. TIMING SPECIFICATION FOR PROGRAMMING (T_A = 25°C ± 5°C, V_{CC} = 5V ± 5%, V_{DD} = 20V ± 1V)

Symbol	Parameter	Min	Max	Unit	Test Conditions
t_{AW}	Address Setup Time to $\overline{RESET}$↑	$4t_{CY}$			
t_{WA}	Address Hold Time After $\overline{RESET}$ ↑	$4t_{CY}$			
t_{DW}	Data in Setup Time to PROG ↑	$4t_{CY}$			
t_{WD}	Data in Hold Time After PROG ↓	$4t_{CY}$			
t_{PH}	$\overline{RESET}$ Hold Time to Verify	$4t_{CY}$			
t_{VDDW}	V_{DD}	$4t_{CY}$			
t_{VDDH}	V_{DD} Hold Time After PROG ↓	0			
t_{PW}	Program Pulse Width	50	60	mS	
t_{TW}	Test 0 Setup Time for Program Mode	$4t_{CY}$			
t_{WT}	Test 0 Hold Time After Program Mode	$4t_{CY}$			
t_{DO}	Test 0 to Data Out Delay		$4t_{CY}$		
t_{WW}	$\overline{RESET}$ Pulse Width to Latch Address	$4t_{CY}$			
t_r, t_f	V_{DD} and PROG Rise and Fall Times	0.5	2.0	μs	
t_{CY}	CPU Operation Cycle Time	5.0		μs	
t_{RE}	$\overline{RESET}$ Setup Time before EA↑	$4t_{CY}$			

NOTE: If Test 0 is high t_{DO} can be triggered by $\overline{RESET}$ ↑

D.C. SPECIFICATION FOR PROGRAMMING (T_A = 25°C ± 5°C, V_{CC} = 5V ± 5%, V_{DD} = 20V ± .5V)

Symbol	Parameter	Min	Max	Unit	Test Conditions
V_{DOH}	V_{DD} Program Voltage High Level	19.5	20.5	V	
V_{DDL}	V_{DD} Voltage Low Level	4.75	5.25	V	
V_{PH}	PROG Program Voltage High Level	17.5	18.5	V	
V_{PL}	PROG Voltage Low Level		0.2	V	
V_{EAH}	EA Program or Verify Voltage High Level	17.5	18.5	V	
I_{DD}	V_{DD} High Voltage Supply Current		30.0	mA	
I_{PROG}	PROG High Voltage Supply Current		16.0	mA	
I_{EA}	EA High Voltage Supply Current		1.0	mA	

8243
MCS-48® INPUT/OUTPUT EXPANDER

- **Low Cost**
- **Simple Interface to MCS-48® Microcomputers**
- **Four 4-Bit I/O Ports**
- **AND and OR Directly to Ports**
- **24-Pin DIP**
- **Single 5V Supply**
- **High Output Drive**
- **Direct Extension of Resident 8048 I/O Ports**

The Intel® 8243 is an input/output expander designed specifically to provide a low cost means of I/O expansion for the MCS-48® family of single chip microcomputers. Fabricated in 5 volts NMOS, the 8243 combines low cost, single supply voltage and high drive current capability.

The 8243 consists of four 4-bit bidirectional static I/O ports and one 4-bit port which serves as an interface to the MCS-48 microcomputers. The 4-bit interface requires that only 4 I/O lines of the 8048 be used for I/O expansion, and also allows multiple 8243's to be added to the same bus.

The I/O ports of the 8243 serve as a direct extension of the resident I/O facilities of the MCS-48 microcomputers and are accessed by their own MOV, ANL, and ORL instructions.

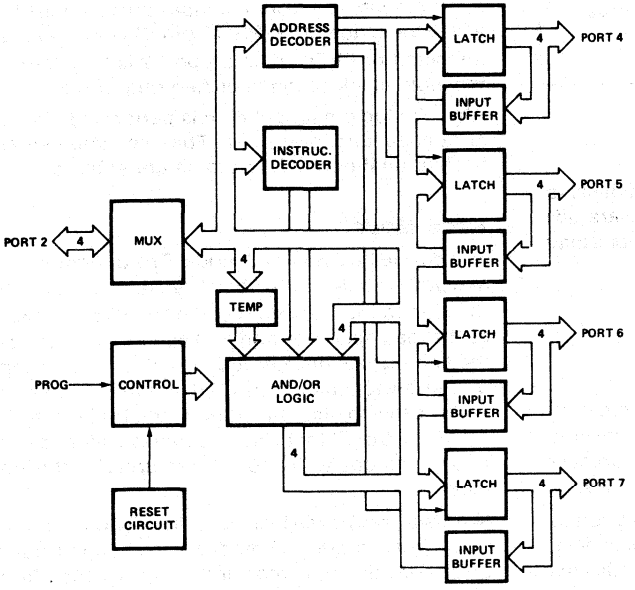

Figure 1. 8243 Block Diagram

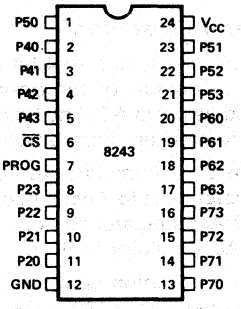

Figure 2. 8243 Pin Configuration

Intel Corporation Assumes No Responsibilty for the Use of Any Circuitry Other Than Circuitry Embodied in an Intel Product. No Other Circuit Patent Licenses are Implied.
©INTEL CORPORATION, 1980

Table 1. Pin Description

Symbol	Pin No.	Function
PROG	7	Clock Input. A high to low transition on PROG signifies that address and control are available on P20-P23, and a low to high transition signifies that data is available on P20-P23.
$\overline{CS}$	6	Chip Select Input. A high on CS inhibits any change of output or internal status.
P20-P23	11-8	Four (4) bit bi-directional port contains the address and control bits on a high to low transition of PROG. During a low to high transition contains the data for a selected output port if a write operation, or the data from a selected port before the low to high transition if a read operation.
GND	12	0 volt supply.
P40-P43 P50-P53 P60-P63 P70-P73	2-5 1, 23-21 20-17 13-16	Four (4) bit bi-directional I/O ports. May be programmed to be input (during read), low impedance latched output (after write), or a tri-state (after read). Data on pins P20-P23 may be directly written, ANDed or ORed with previous data.
V_{CC}	24	+5 volt supply.

FUNCTIONAL DESCRIPTION

General Operation

The 8243 contains four 4-bit I/O ports which serve as an extension of the on-chip I/O and are addressed as ports 4-7. The following operations may be performed on these ports:

- Transfer Accumulator to Port.
- Transfer Port to Accumulator.
- AND Accumulator to Port.
- OR Accumulator to Port.

All communication between the 8048 and the 8243 occurs over Port 2 (P20-P23) with timing provided by an output pulse on the PROG pin of the processor. Each transfer consists of two 4-bit nibbles:

The first containing the "op code" and port address and the second containing the actual 4-bits of data. A high to low transition of the PROG line indicates that address is present while a low to high transition indicates the presence of data. Additional 8243's may be added to the 4-bit bus and chip selected using additional output lines from the 8048/8748/8035.

Power On Initialization

Initial application of power to the device forces input/output ports 4, 5, 6, and 7 to the tri-state and port 2 to the input mode. The PROG pin may be either high or low when power is applied. The first high to low transition of PROG causes device to exit power on mode. The power on sequence is initiated if VCC drops below 1V.

P21	P20	Address Code	P23	P22	Instruction Code
0	0	Port 4	0	0	Read
0	1	Port 5	0	1	Write
1	0	Port 6	1	0	ORLD
1	1	Port 7	1	1	ANLD

Write Modes

The device has three write modes. MOVD Pi, A directly writes new data into the selected port and old data is lost. ORLD Pi, A takes new data, OR's it with the old data and then writes it to the port. ANLD Pi, A takes new data, AND's it with the old data and then writes it to the port. Operation code and port address are latched from the input port 2 on the high to low transition of the PROG pin. On the low to high transition of PROG data on port 2 is transferred to the logic block of the specified output port.

After the logic manipulation is performed, the data is latched and outputed. The old data remains latched until new valid outputs are entered.

Read Mode

The device has one read mode. The operation code and port address are latched from the input port 2 on the high to low transition of the PROG pin. As soon as the read operation and port address are decoded, the appropriate outputs are tri-stated, and the input buffers switched on. The read operation is terminated by a low to high transition of the PROG pin. The port (4, 5, 6 or 7) that was selected is switched to the tri-stated mode while port 2 is returned to the input mode.

Normally, a port will be in an output (write mode) or input (read mode). If modes are changed during operation, the first read following a write should be ignored; all following reads are valid. This is to allow the external driver on the port to settle after the first read instruction removes the low impedance drive from the 8243 output. A read of any port will leave that port in a high impedance state.

ABSOLUTE MAXIMUM RATINGS*

Ambient Temperature Under Bias ..... 0°C to 70°C
Storage Temperature ..... -65°C to +150°C
Voltage on Any Pin
With Respect to Ground ..... -0.5 V to +7V
Power Dissipation ..... 1 Watt

NOTICE: Stresses above those listed under "Absolute Maximum Ratings" may cause permanent damage to the device. This is a stress rating only and functional operation of the device at these or any other conditions above those indicated in the operational sections of this specification is not implied. Exposure to absolute maximum rating conditions for extended periods may affect device reliability.

D.C. CHARACTERISTICS T_A = 0°C to 70°C, V_{CC} = 5V ±10%

Symbol	Parameter	Min	Typ	Max	Units	Test Conditions
V_{IL}	Input Low Voltage	-0.5		0.8	V	
V_{IH}	Input High Voltage	2.0		V_{CC}+0.5	V	
V_{OL1}	Output Low Voltage Ports 4-7			0.45	V	I_{OL} = 4.5 mA*
V_{OL2}	Output Low Voltage Port 7			1	V	I_{OL} = 20 mA
V_{OH1}	Output High Voltage Ports 4-7	2.4			V	I_{OH} = 240μA
I_{IL1}	Input Leakage Ports 4-7	-10		20	μA	Vin = V_{CC} to OV
I_{IL2}	Input Leakage Port 2, CS, PROG	-10		10	μA	Vin = V_{CC} to OV
V_{OL3}	Output Low Voltage Port 2			45	V	I_{OL} = 0.6 mA
I_{CC}	V_{CC} Supply Current		10	20	mA	
V_{OH2}	Output Voltage Port 2	2.4				I_{OH} = 100μA
I_{OL}	Sum of all I_{OL} from 16 Outputs			72	mA	4.5 mA Each Pin

*See following graph for additional sink current capability

A.C. CHARACTERISTICS T_A = 0°C to 70°C, V_{CC} = 5V ±10%

Symbol	Parameter	Min	Max	Units	Test Conditions
tA	Code Valid Before PROG	100		ns	80 pF Load
tB	Code Valid After PROG	60		ns	20 pF Load
tC	Data Valid Before PROG	200		ns	80 pF Load
tD	Data Valid After PROG	20		ns	20 pF Load
tH	Floating After PROG	0	150	ns	20 pF Load
tK	PROG Negative Pulse Width	700		ns	
tCS	CS Valid Before/After PROG	50		ns	
tPO	Ports 4-7 Valid After PROG		700	ns	100 pF Load
tLP1	Ports 4-7 Valid Before/After PROG	100		ns	
tACC	Port 2 Valid After PROG		650	ns	80 pF Load

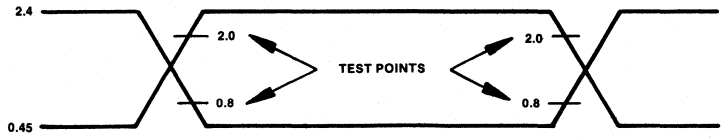

WAVEFORMS

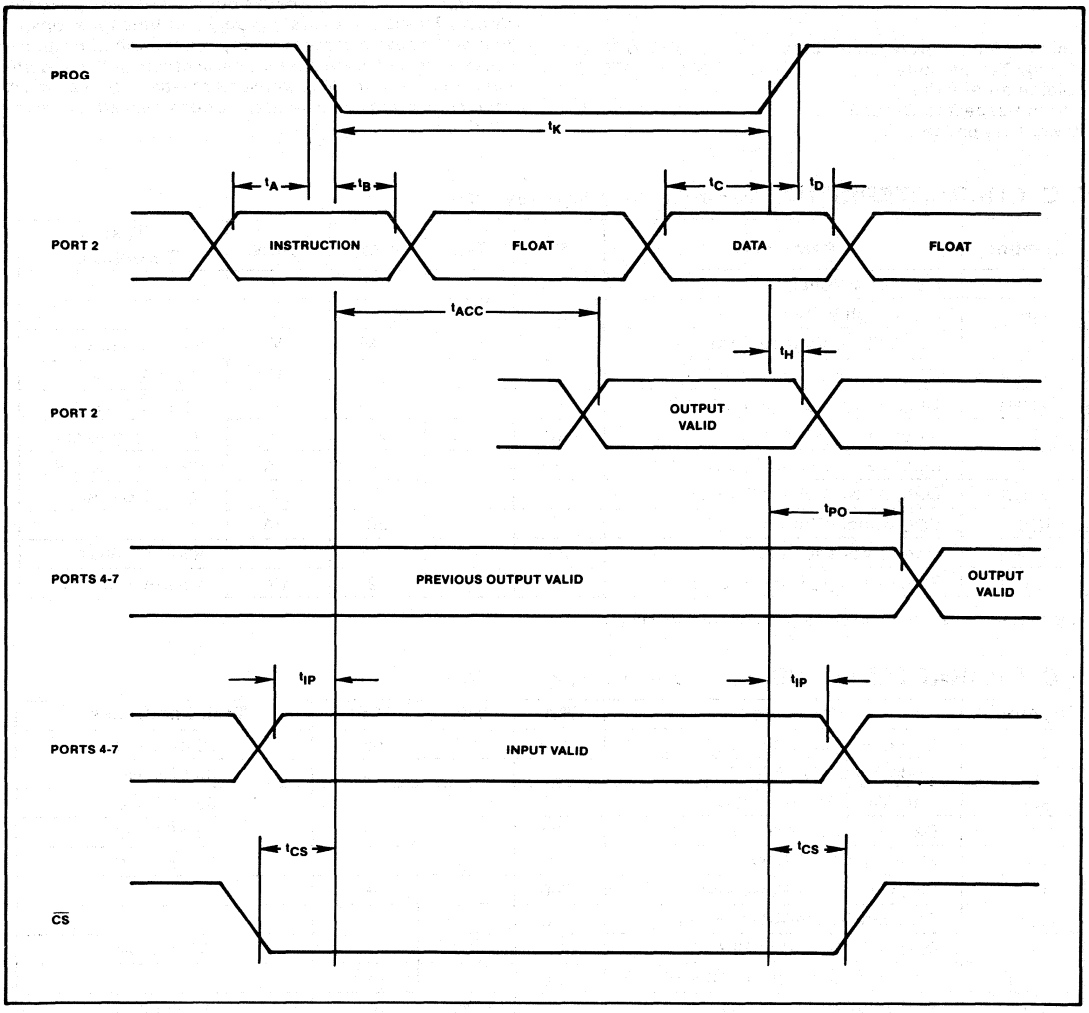
PROG
t_K
t_A
t_B
t_C
t_D
PORT 2
INSTRUCTION
FLOAT
DATA
FLOAT
t_{ACC}
t_H
PORT 2
OUTPUT VALID
t_{PO}
PORTS 4-7
PREVIOUS OUTPUT VALID
OUTPUT VALID
t_{IP}
t_{IP}
PORTS 4-7
INPUT VALID
t_{CS}
t_{CS}
$\overline{CS}$

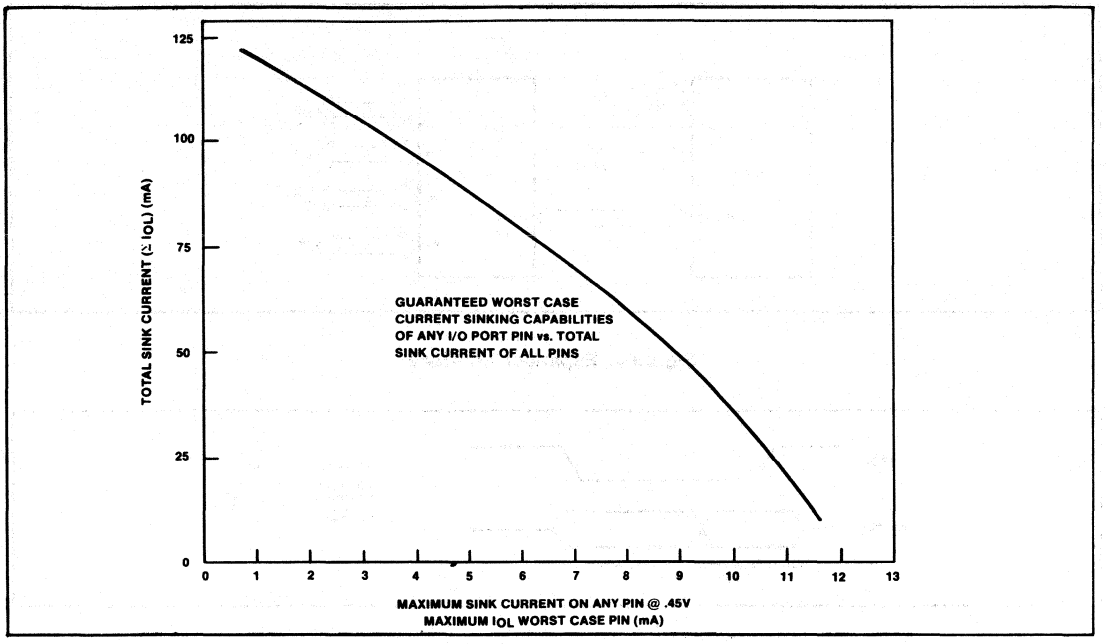

Figure 3

Sink Capability

The 8243 can sink 5 mA @ .45V on each of its 16 I/O lines simultaneously. If, however, all lines are not sinking simultaneously or all lines are not fully loaded, the drive capability of any individual line increases as is shown by the accompanying curve.

For example, if only 5 of the 16 lines are to sink current at one time, the curve shows that each of those 5 lines is capable of sinking 9 mA @ .45V (if any lines are to sink 9 mA the total IOL must not exceed 45 mA or five 9 mA loads).

Example: How many pins can drive 5 TTL loads (1.6 mA) assuming remaining pins are unloaded?

I_{OL} = 5 x 1.6 mA = 8 mA
ϵI_{OL} = 60 mA from curve
pins = 60 mA ÷ 8 mA/pin = 7.5 = 7

In this case, 7 lines can sink 8 mA for a total of 56mA. This leaves 4 mA sink current capability which can be divided in any way among the remaining 8 I/O lines of the 8243.

Example: This example shows how the use of the 20 mA sink capability of Port 7 affects the sinking capability of the other I/O lines.

An 8243 will drive the following loads simultaneously.

2 loads—20 mA @ 1V (port 7 only)
8 loads—4 mA @ .45V
6 loads—3.2 mA @ .45V
Is this within the specified limits?

ϵI_{OL} = (2 x 20) + (8 x 4) + (6 x 3.2) = 91.2 mA.
From the curve: for I_{OL} = 4 mA, $\epsilon I_{OL} \approx$ 93 mA.
since 91.2 mA < 93 mA the loads are within specified limits.

Although the 20 mA @ 1V loads are used in calculating ϵI_{OL}, it is the largest current required @ .45V which determines the maximum allowable ϵI_{OL}.

NOTE: A10 to 50KΩ pullup resistor to +5V should be added to 8243 outputs when driving to 5V CMOS directly.

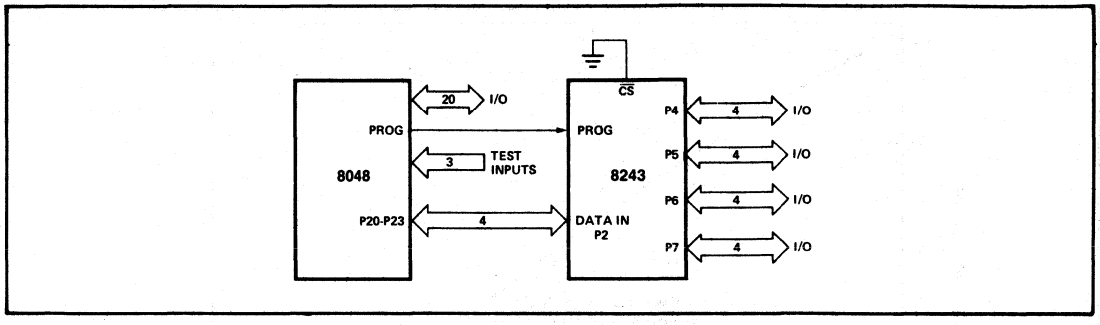

Figure 4. Expander Interface

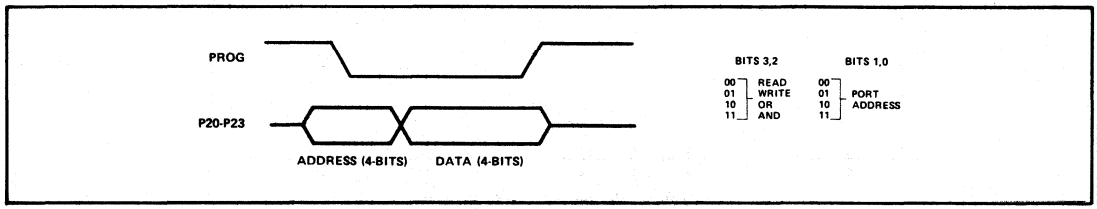

Figure 5. Output Expander Timing

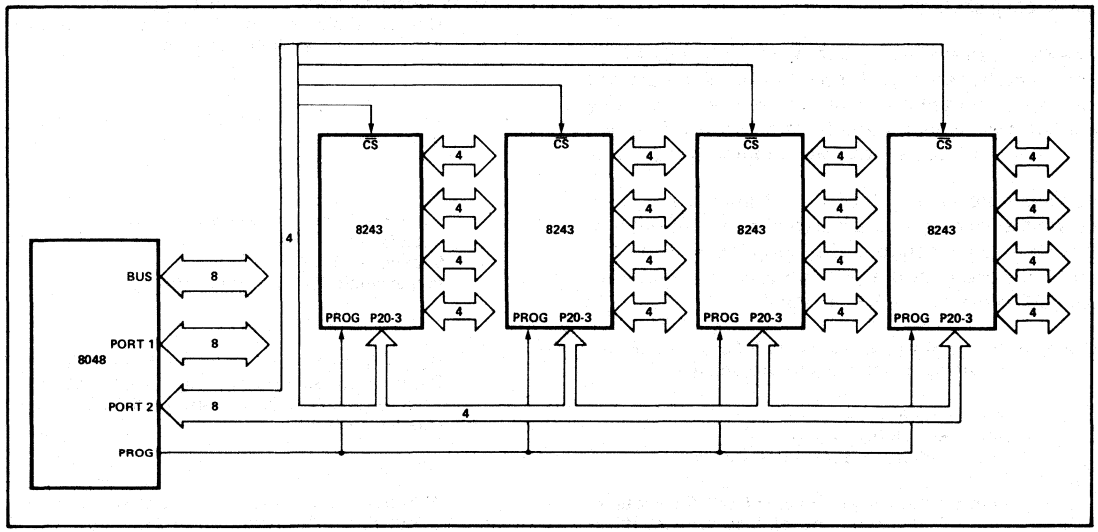

Figure 6. Using Multiple 8243's

PRELIMINARY

8050H/8040H
HMOS SINGLE COMPONENT 8-BIT MICROCOMPUTER

- **8050H 11MHz Mask Programmable ROM**
- **8040H 11MHz CPU Only with Power Down Mode**

- **8-Bit CPU, ROM, RAM, I/O in Single Package**
- **High Performance HMOS**
- **Reduced Power Consumption**
- **1.36 μsec Cycle Version All Instructions 1 or 2 Cycles.**
- **Over 90 Instructions: 70% Single Byte**
- **4K x 8 ROM 256 x 8 RAM 27 I/O Lines**
- **Interval Timer/Event Counter**
- **Easily Expandable Memory and I/O**
- **Compatible with 8080/8085 Series Peripherals**
- **Two Single Level Interrupts**

The Intel 8050H is a totally self-sufficient, 8-bit parallel computer fabricated on single silicon chips using Intel's advanced N-channel silicon gate HMOS process.

The 8050H contains a 4K x 8 non-volatile program read-only memory, a 256 x 8 RAM data memory, 27 I/O lines, and an 8-bit timer/counter in addition to on-board oscillator and clock circuits. For systems that require extra capability, the 8050H/8040H can be expanded using MCS-80®/MCS-85® peripherals. The 8040H is the equivalent of the 8050H without program memory and can be used with external ROM and RAM.

To minimize development problems and provide maximum flexibility, a logically and functionally pin-compatible version of the 8050H with UV-erasable user-programmable EPROM program memory will be available. The 8750H emulates the 8050H to 11MHz with minor differences.

These microcomputers are designed to be efficient controllers as well as arithmetic processors. They have extensive bit handling capability as well as facilities for both binary and BCD arithmetic. Efficient use of program memory results from an instruction set consisting mostly of single byte instructions and no instructions over 2 bytes in length.

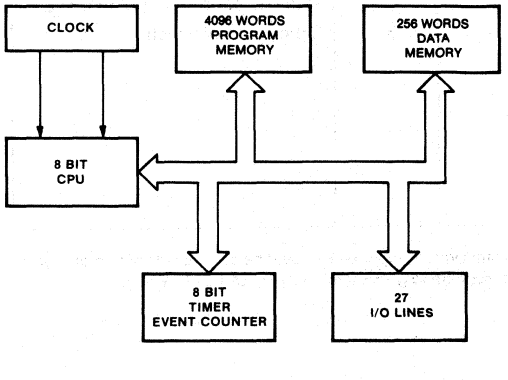

Figure 1.
Block Diagram

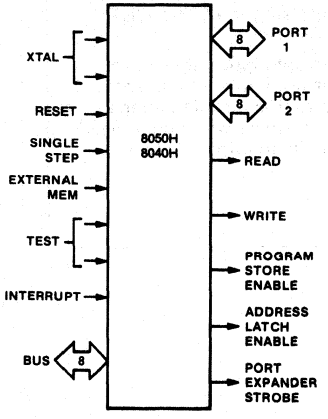

Figure 2.
Logic Symbol

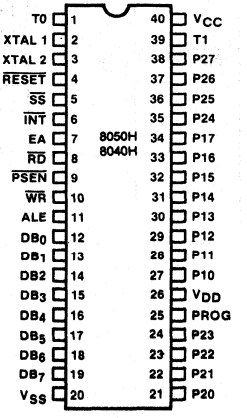

Figure 3.
Pin Configuration

The following are trademarks of Intel Corporation and its affiliates and may be used only to identify Intel products: i, Int$_e$l, INTEL, INTELLEC, MCS, Im, iCS, ICE, UPI, BXP, iSBC, iSBX, Insite, iRMX, System 2000, CREDIT, iRMX/80, MULTIBUS, PROMPT, Promware, Megachassis, Library Manager, MAIN MULTIMODULE, and the combination of MCS, ICE, iSBC, iRMX or iCS and a numerical suffix. © INTEL CORPORATION, 1981.

AFN-02030A
SEPTEMBER 1981

Table 1. Pin Description

Symbol	Pin No.	Function
V_{SS}	20	Circuit GND potential
V_{DD}	26	Low power standby pin
V_{CC}	40	Main power supply; +5V during operation.
PROG	25	Output strobe for 8243 I/O expander.
P10-P17 Port 1	27-34	8-bit quasi-bidirectional port.
P20-P27 Port 2	21-24 35-38	8-bit quasi-bidirectional port. P20-P23 contain the four high order program counter bits during an external program memory fetch and serve as a 4-bit I/O expander bus for 8243.
DB0-DB7 BUS	12-19	True bidirectional port which can be written or read synchronously using the $\overline{RD}$, $\overline{WR}$ strobes. The port can also be statically latched.
		Contains the 8 low order program counter bits during an external program memory fetch, and receives the addressed instruction under the control of $\overline{PSEN}$. Also contains the address and data during an external RAM data store instruction, under control of ALE, $\overline{RD}$, and $\overline{WR}$.
T0	1	Input pin testable using the conditional transfer instructions JT0 and JNT0. T0 can be designated as a clock output using ENT0 CLK instruction.
T1	39	Input pin testable using the JT1, and JNT1 instructions. Can be designated the timer/counter input using the STRT CNT instruction.
$\overline{INT}$	6	Interrupt input. Initiates an interrupt if interrupt is enabled. Interrupt is disabled after a reset. Also testable with conditional jump instruction. (Active low)

Symbol	Pin No.	Function
$\overline{RD}$	8	Output strobe activated during a BUS read. Can be used to enable data onto the bus from an external device.
		Used as a read strobe to external data memory. (Active low)
$\overline{RESET}$	4	Input which is used to initialize the processor. (Active low) (Non TTL V_{IH})
$\overline{WR}$	10	Output strobe during a bus write. (Active low)
		Used as write strobe to external data memory.
ALE	11	Address latch enable. This signal occurs once during each cycle and is useful as a clock output.
		The negative edge of ALE strobes address into external data and program memory.
$\overline{PSEN}$	9	Program store enable. This output occurs only during a fetch to external program memory. (Active low)
$\overline{SS}$*	5	Single step input can be used in conjunction with ALE to "single step" the processor through each instruction. (Active low)
EA*	7	External access input which forces all program memory fetches to reference external memory. Useful for emulation and debug, and essential for testing and program verification. (Active high)
XTAL1	2	One side of crystal input for internal oscillator. Also input for external source. (Non TTL V_{IH})
XTAL2	3	Other side of crystal input.

*Note: Unused input pins should be connected to V_{CC} or V_{SS} as appropriate (e.g., $\overline{SS}$ tied to V_{CC}, EA tied to V_{DD}).

Table 2. Instruction Set

Accumulator

Mnemonic	Description	Bytes	Cycles
ADD A, R	Add register to A	1	1
ADD A, @R	Add data memory to A	1	1
ADD A, # data	Add immediate to A	2	2
ADDC A, R	Add register with carry	1	1
ADDC A, @R	Add data memory with carry	1	1
ADDC A, # data	Add immediate with carry	2	2
ANL A, R	And register to A	1	1
ANL A, @R	And data memory to A	1	1
ANL A, # data	And immediate to A	2	2
ORL A, R	Or register to A	1	1
ORL A @R	Or data memory to A	1	1
ORL A, # data	Or immediate to A	2	2
XRL A, R	Exclusive or register to A	1	1
XRL A, @R	Exclusive or data memory to A	1	1
XRL, A, # data	Exclusive or immediate to A	2	2
INC A	Increment A	1	1
DEC A	Decrement A	1	1
CLR A	Clear A	1	1
CPL A	Complement A	1	1
DA A	Decimal adjust A	1	1
SWAP A	Swap nibbles of A	1	1
RL A	Rotate A left	1	1
RLC A	Rotate A left through carry	1	1
RR A	Rotate A right	1	1
RRC A	Rotate A right through carry	1	1

Input/Output

Mnemonic	Description	Bytes	Cycles
IN A, P	Input port to A	1	2
OUTL P, A	Output A to port	1	2
ANL P, # data	And immediate to port	2	2
ORL P, # data	Or immediate to port	2	2
INS A, BUS	Input BUS to A	1	2
OUTL BUS, A	Output A to BUS	1	2
ANL BUS, # data	And immediate to BUS	2	2
ORL BUS, # data	Or immediate to BUS	2	2
MOVD A,P	Input expander port to A	1	2
MOVD P, A	Output A to expander port	1	2
ANLD P, A	And A to expander port	1	2
ORLD P, A	Or A to expander port	1	2

Registers

Mnemonic	Description	Bytes	Cycles
INC R	Increment register	1	1
INC @R	Increment data memory	1	1
DEC R	Decrement register	1	1

Branch

Mnemonic	Description	Bytes	Cycles
JMP addr	Jump unconditional	2	2
JMPP @A	Jump indirect	1	2
DJNZ R, addr	Decrement register and skip	2	2
JC addr	Jump on carry = 1	2	2
JNC addr	Jump on carry = 0	2	2
JZ addr	Jump on A zero	2	2
JNZ addr	Jump on A not zero	2	2
JTO addr	Jump on TO = 1	2	2
JNTO addr	Jump on TO = 0	2	2
JT1 addr	Jump on T1 = 1	2	2
JNT1 addr	Jump on T1 = 0	2	2
JF0 addr	Jump on F0 = 1	2	2
JF1 addr	Jump on F1 = 1	2	2
JTF addr	Jump on timer flag	2	2
JN1 addr	Jump on INT = 0	2	2
JBb addr	Jump on accumulator bit	2	2

Subroutine

Mnemonic	Description	Bytes	Cycles
CALL addr	Jump to subroutine	2	2
RETR	Return	1	2
RETR	Return and restore status	1	2

Flags

Mnemonic	Description	Bytes	Cycles
CLR C	Clear carry	1	1
CPL C	Complement carry	1	1
CLR F0	CLear flag 0	1	1
CPL F0	Complement flag 0	1	1
CLR F1	Clear flag 1	1	1
CPL F1	Complement flag 1	1	1

Data Moves

Mnemonic	Description	Bytes	Cycles
MOV A, R	Move register to A	1	1
MOV A, @R	Move data memory to A	1	1
MOV A, # data	Move immediate to A	2	2
MOV R, A	Move A to register	1	1
MOV @R, A	Move A to data memory	1	1
MOV R, # data	Move immediate to register	2	2
MOV @R, #data	Move immediate to data memory	2	2
MOV A, PSW	Move PSW to A	1	1
MOV PSW, A	Move A to PSW	1	1
XCH A, R	Exchange A and register	1	1
XCH A, @R	Exchange A and data memory	1	1
XCHD A, @R	Exchange nibble of A and register	1	1
MOVX A, @R	Move external data memory to A	1	2
MOVX @R, A	Move A to external data memory	1	2
MOVP A, @A	Move to A from current page	1	2
MOVP3 A, @	Move to A from page 3	1	2

Timer/Counter

Mnemonic	Description	Bytes	Cycles
MOV A, T	Read timer/counter	1	1
MOV T, A	Load timer/counter	1	1
STRT T	Start timer	1	1
STRT CNT	Start counter	1	1
STOP TCNT	Stop timer/counter	1	1
EN TCNT1	Enable timer/counter interrupt	1	1
DIS TCNT1	Disable timer/counter interrupt	1	1

Control

Mnemonic	Description	Bytes	Cycles
EN 1	Enable external interrupt	1	1
DIS 1	Disable external interrupt	1	1
SEL RB0	Select register bank 0	1	1
SEL RB1	Select register bank 1	1	1
SEL MB0	Select memory bank 0	1	1
SEL MB1	Select memory bank 1	1	1
ENT0 CLK	Enable clock output on T0	1	1

Mnemonic	Description	Bytes	Cycles
NOP	No operation	1	1

ABSOLUTE MAXIMUM RATINGS*

Ambient Temperature Under Bias ..... 0°C to 70°C
Storage Temperature ..... -65°C to +150°C
Voltage On Any Pin With Respect to Ground ..... -0.5V to +7V
Power Dissipation ..... 1.5 Watt

**NOTICE: Stresses above those listed under "Absolute Maximum Ratings" may cause permanent damage to the device. This is a stress rating only and functional operation of device at these or any other conditions above those indicated in the operational sections of this specification is not implied. Exposure to absolute maximum rating conditions for extended periods may affect device reliability.*

D.C. CHARACTERISTICS (T_A = 0°C to 70°C, V_{CC} = V_{DD} = 5V ± 10%, V_{SS} = 0V)

Symbol	Parameter	Limits			Unit	Test Conditions
		Min	Typ	Max		
V_{IL}	Input Low Voltage (All Except $\overline{RESET}$, X1, X2)	-.5		.8	V	
V_{IL1}	Input Low Voltage ($\overline{RESET}$, X1, X2)	-.5		.6	V	
V_{IH}	Input High Voltage (All Except XTAL1, XTAL2, $\overline{RESET}$)	2.0		V_{CC}	V	
V_{IH1}	Input High Voltage (X1, X2, $\overline{RESET}$)	3.8		V_{CC}	V	
V_{OL}	Output Low Voltage (BUS)			.45	V	I_{OL} = 2.0 mA
V_{OL1}	Output Low Voltage ($\overline{RD}$, $\overline{WR}$, $\overline{PSEN}$, ALE)			.45	V	I_{OL} = 1.8 mA
V_{OL2}	Output Low Voltage (PROG)			.45	V	I_{OL} = 1.0 mA
V_{OL3}	Output Low Voltage (All Other Outputs)			.45	V	I_{OL} = 1.6 mA
V_{OH}	Output High Voltage (BUS)	2.4			V	I_{OH} = -400 μA
V_{OH1}	Output High Voltage ($\overline{RD}$, $\overline{WR}$, $\overline{PSEN}$, ALE)	2.4			V	I_{OH} = -100 μA
V_{OH2}	Output High Voltage (All Other Outputs)	2.4			V	I_{OH} = -40 μA
I_{L1}	Input Leakage Current (T1, $\overline{INT}$)			± 10	μA	$V_{SS} \leq V_{IN} \leq V_{CC}$
I_{LI1}	Input Leakage Current (P10-P17, P20-P27, EA, $\overline{SS}$)			-500	μA	V_{SS} + .45 ≤ $V_{IN} \leq V_{CC}$
I_{L0}	Output Leakage Current (BUS, T0) (High Impedance State)			± 10	μA	V_{SS} + .45 ≤ $V_{IN} \leq V_{CC}$
I_{DD}	V_{DD} Supply Current		10	20	mA	
I_{DD}+ I_{CC}	Total Supply Current		40	80	mA	
V_{DD}	RAM Standby Voltage	2.2		V_{CC}	V	Standby Mode, Reset ≤ V_{IL1}

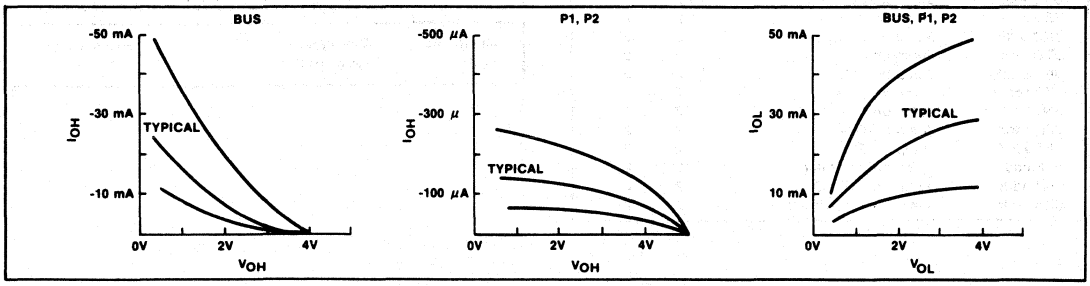

A.C. CHARACTERISTICS (T_A = 0°C to 70°C, V_{CC} = V_{DD} = 5V ± 10%, V_{SS} = 0V)

Symbol	Parameter	f (t_{CY}) (Note 4)	11 MHz		Unit	Conditions (Note 1)
			Min	Max		
t_{LL}	ALE Pulse Width	7/30 t_{CY} -170	150		ns	
t_{AL}	Addr Setup to ALE	1/5 t_{CY} -110	160		ns	
t_{LA}	Addr Hold from ALE	1/15 t_{CY} -40	50		ns	
t_{CC1}	Control Pulse Width ($\overline{RD}$, $\overline{WR}$)	1/2 t_{CY} -200	480		ns	
t_{CC2}	Control Pulse Width ($\overline{PSEN}$)	2/5 t_{CY} -200	350		ns	
t_{DW}	Data Setup before $\overline{WR}$	13/30 t_{CY} -200	390		ns	
t_{WD}	Data Hold after $\overline{WR}$	1/15 t_{CY} -50	40		ns	(Note 2)
t_{DR}	Data Hold ($\overline{RD}$, $\overline{PSEN}$)	1/10 t_{CY} -30	0	110	ns	
t_{RD1}	$\overline{RD}$ to Data in	2/5 t_{CY} -200		350	ns	
t_{RD2}	$\overline{PSEN}$ to Data in	3/10 t_{CY} -200		210	ns	
t_{AW}	Addr Setup to $\overline{WR}$	2/5 t_{CY} -150	400		ns	
t_{AD1}	Addr Setup to Data ($\overline{RD}$)	23/30 t_{CY} -250		800	ns	
t_{AD2}	Addr Setup to Data ($\overline{PSEN}$)	3/5 t_{CY} -250		570	ns	
t_{AFC1}	Addr Float to $\overline{RD}$, $\overline{WR}$	2/15 t_{CY} -40	140		ns	
t_{AFC2}	Addr Float to $\overline{PSEN}$	1/30 t_{CY} -40	10		ns	
t_{LAFC1}	ALE to Control, ($\overline{RD}$, $\overline{WR}$)	1/5 t_{CY} -75	200		ns	
t_{LAFC2}	ALE to Control ($\overline{PSEN}$)	1/10 t_{CY} -75	60		ns	
t_{CA1}	Control to ALE ($\overline{RD}$, $\overline{WR}$, $\overline{PROG}$)	1/15 t_{CY} -40	50		ns	
t_{CA2}	Control to ALE ($\overline{PSEN}$)	4/15 t_{CY} -40	320		ns	
t_{CP}	Port Control Setup to $\overline{PROG}$	2/15 t_{CY} -80	100		ns	
t_{PC}	Port Control Hold to $\overline{PROG}$	4/15 t_{CY} -200	160		ns	
t_{PR}	$\overline{PROG}$ to P2 Input Valid	6/10 t_{CY} -120		700	ns	
t_{PF}	Input Data Hold from $\overline{PROG}$	1/10 t_{CY}	0	140	ns	
t_{DP}	Output Data Setup	2/5 t_{CY} -150	400		ns	
t_{PD}	Output Data Hold	1/10 t_{CY} -50	90		ns	
t_{PP}	$\overline{PROG}$ Pulse Width	7/10 t_{CY} -250	700		ns	
tPL	Port 2 I/O Setup to ALE	4/15 t_{CY} -200	160		ns	
t_{LP}	Port 2 I/O Hold to ALE	1/10 t_{CY} -100	40		ns	
t_{PV}	Port Output from ALE	3/10 t_{CY} +100		510	ns	
t_{CY}	Cycle Time	1/(15/f_{XTAL})	1.36*		µs	(Note 3)
t_{0PRR}	T0 Rep Rate	3/15 t_{CY}	270		ns	

Notes:

1. Control Outputs CL = 80 pF
   BUS Outputs CL = 150 pF
2. BUS High Impedance Load 20pf
3. Interrupt pin must remain low for at least 3 t_{cy} to ensure proper operation.
4. f(t_{cy}) assumes 50% duty cycle on X1 and X2.

WAVEFORMS

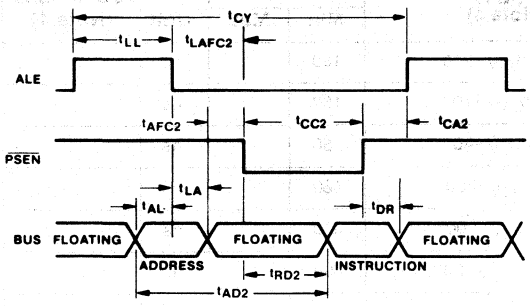

Instruction Fetch From External Program Memory

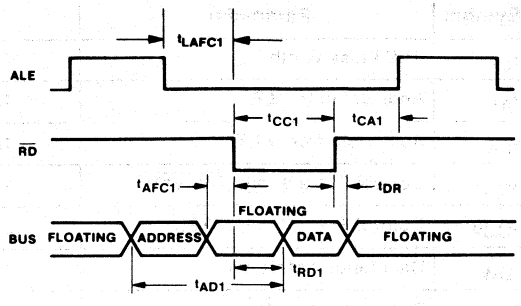

Read From External Data Memory

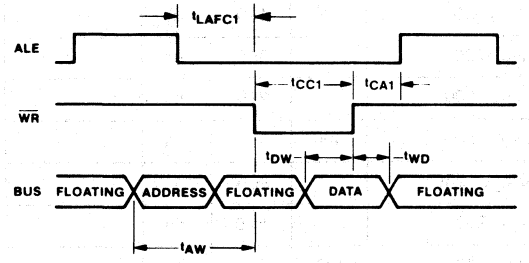

Write to External Data Memory

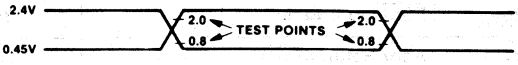

A.C. TESTING: INPUTS ARE DRIVEN AT 2.4V FOR A LOGIC "1" AND 0.45V FOR A LOGIC "0." OUTPUT TIMING MEASUREMENTS ARE MADE AT 2.0V FOR A LOGIC "1" AND 0.8V FOR A LOGIC "0."

Input and Output for A.C. Tests

PORT 2 EXPANDER TIMING

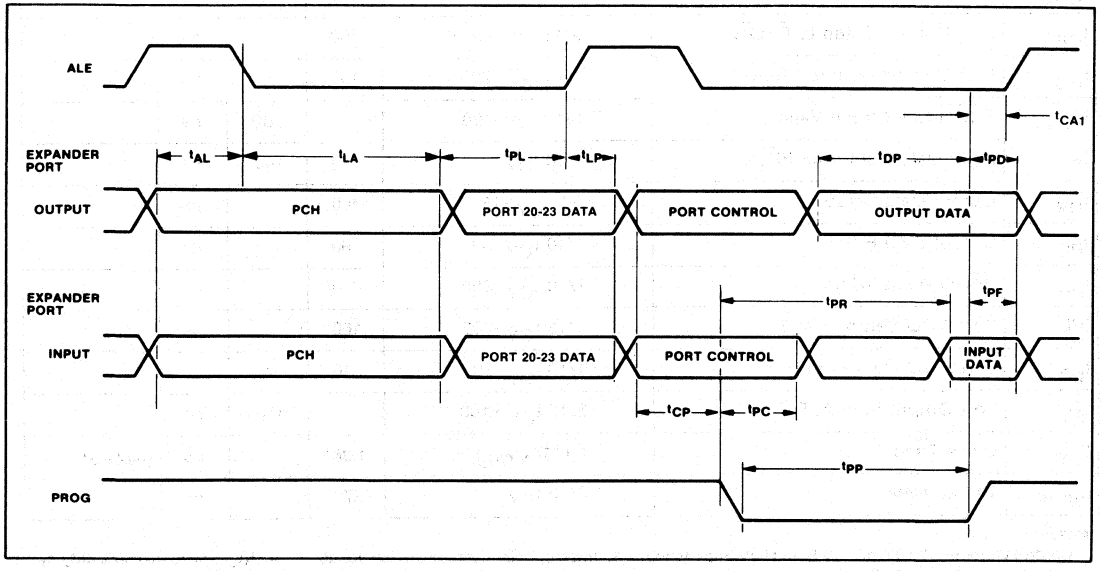

I/O PORT TIMING

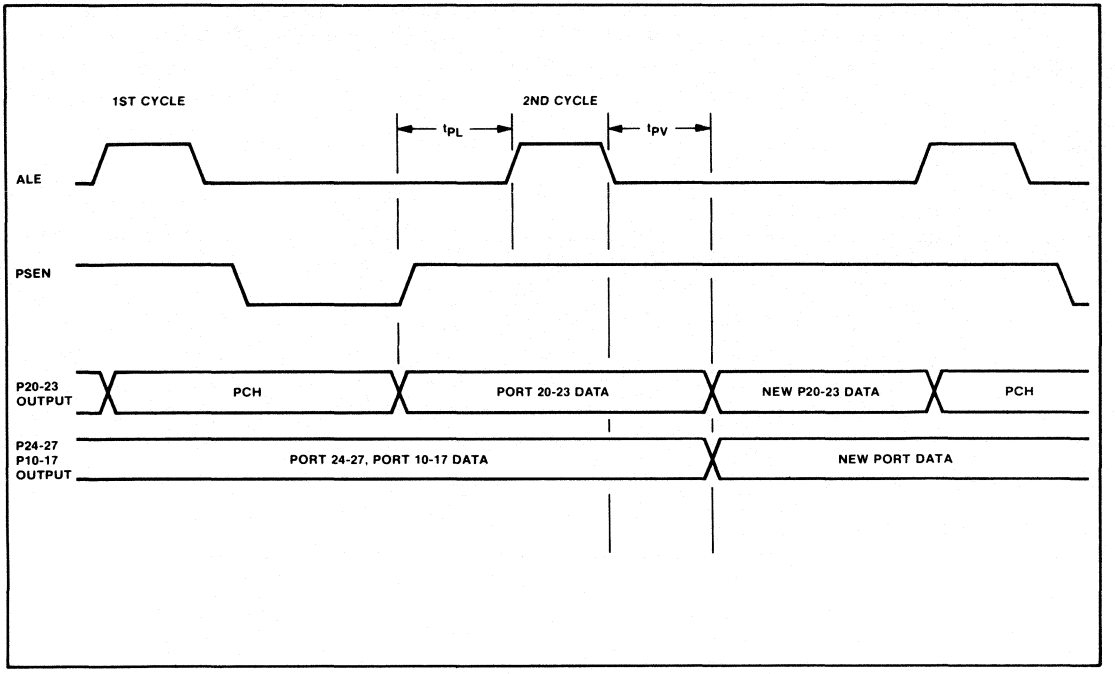

SUGGESTED CIRCUITS

OSCILLATOR MODE

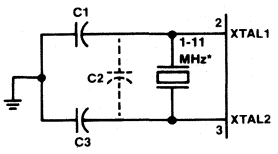

C1 = 5pF ± 1/2pF + STRAY < 5pF
C2 = CRYSTAL + STRAY < 8pF
C3 = 20pF ± 1pF + STRAY < 5pF

CRYSTAL SERIES RESISTANCE SHOULD BE LESS THAN 75 Ω AT 6MHz; LESS THAN 180 Ω AT 3.6MHz.

LC OSCILLATOR MODE

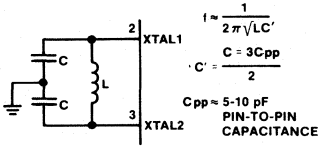

L	C	NOMINAL f
45 μH	20pF	5.2 MHz
120 μH	20pF	3.2 MHz

EACH C SHOULD BE APPROXIMATELY 20pF, INCLUDING STRAY CAPACITANCE.

DRIVING FROM EXTERNAL SOURCE

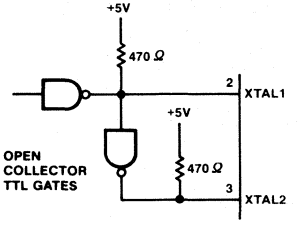

FOR THE 8050H, XTAL1 MUST BE HIGH 35-65% OF THE PERIOD AND XTAL2 MUST BE HIGH 35-65% OF THE PERIOD.

RISE AND FALL TIMES MUST NOT EXCEED 20ns.

Intel Corporation Assumes No Responsibility for the Use of Any Circuitry Other Than Circuitry Embodied in an Intel Product. No Other Circuit Patent Licenses are Implied.

MCS-80/85™ Microprocessors

7

8080A/8080A-1/8080A-2
8-BIT N-CHANNEL MICROPROCESSOR

- **TTL Drive Capability**
- **2 μs (−1:1.3 μs, −2:1.5 μs) Instruction Cycle**
- **Powerful Problem Solving Instruction Set**
- **6 General Purpose Registers and an Accumulator**
- **16-Bit Program Counter for Directly Addressing up to 64K Bytes of Memory**
- **16-Bit Stack Pointer and Stack Manipulation Instructions for Rapid Switching of the Program Environment**
- **Decimal, Binary, and Double Precision Arithmetic**
- **Ability to Provide Priority Vectored Interrupts**
- **512 Directly Addressed I/O Ports**

The Intel® 8080A is a complete 8-bit parallel central processing unit (CPU). It is fabricated on a single LSI chip using Intel's n-channel silicon gate MOS process. This offers the user a high performance solution to control and processing applications.

The 8080A contains 6 8-bit general purpose working registers and an accumulator. The 6 general purpose registers may be addressed individually or in pairs providing both single and double precision operators. Arithmetic and logical instructions set or reset 4 testable flags. A fifth flag provides decimal arithmetic operation.

The 8080A has an external stack feature wherein any portion of memory may be used as a last in/first out stack to store/retrieve the contents of the accumulator, flags, program counter, and all of the 6 general purpose registers. The 16-bit stack pointer controls the addressing of this external stack. This stack gives the 8080A the ability to easily handle multiple level priority interrupts by rapidly storing and restoring processor status. It also provides almost unlimited subroutine nesting.

This microprocessor has been designed to simplify systems design. Separate 16-line address and 8-line bidirectional data busses are used to facilitate easy interface to memory and I/O. Signals to control the interface to memory and I/O are provided directly by the 8080A. Ultimate control of the address and data busses resides with the HOLD signal. It provides the ability to suspend processor operation and force the address and data busses into a high impedance state. This permits OR-tying these busses with other controlling devices for (DMA) direct memory access or multi-processor operation.

NOTE:
The 8080A is functionally and electrically compatible with the Intel® 8080.

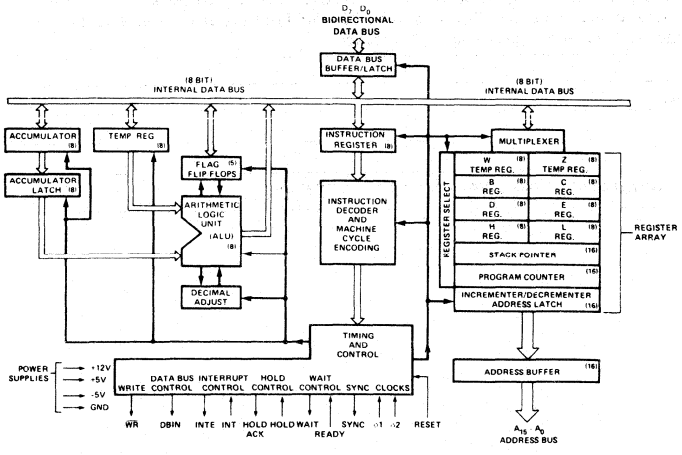

Figure 1. Block Diagram

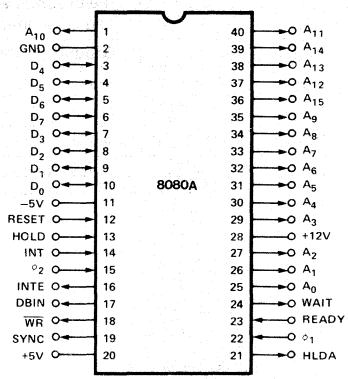

Figure 2. Pin Configuration

Table 1. Pin Description

Symbol	Type	Name and Function
A_{15}-A_0	O	**Address Bus:** The address bus provides the address to memory (up to 64K 8-bit words) or denotes the I/O device number for up to 256 input and 256 output devices. A_0 is the least significant address bit.
D_7-D_0	I/O	**Data Bus:** The data bus provides bi-directional communication betweeen the CPU, memory, and I/O devices for instructions and data transfers. Also, during the first clock cycle of each machine cycle, the 8080A outputs a status word on the data bus that describes the current machine cycle. D_0 is the least significant bit.
SYNC	O	**Synchronizing Signal:** The SYNC pin provides a signal to indicate the beginning of each machine cycle.
DBIN	O	**Data Bus In:** The DBIN signal indicates to external circuits that the data bus is in the input mode. This signal should be used to enable the gating of data onto the 8080A data bus from memory or I/O.
READY	I	**Ready:** The READY signal indicates to the 8080A that valid memory or input data is available on the 8080A data bus. This signal is used to synchronize the CPU with slower memory or I/O devices. If after sending an address out the 8080A does not receive a READY input, the 8080A will enter a WAIT state for as long as the READY line is low. READY can also be used to single step the CPU.
WAIT	O	**Wait:** The WAIT signal acknowledges that the CPU is in a WAIT state.
$\overline{WR}$	O	**Write:** The $\overline{WR}$ signal is used for memory WRITE or I/O output control. The data on the data bus is stable while the $\overline{WR}$ signal is active low ($\overline{WR}$ = 0).
HOLD	I	**Hold:** The HOLD signal requests the CPU to enter the HOLD state. The HOLD state allows an external device to gain control of the 8080A address and data bus as soon as the 8080A has completed its use of these busses for the current machine cycle. It is recognized under the following conditions: • the CPU is in the HALT state. • the CPU is in the T2 or TW state and the READY signal is active. As a result of entering the HOLD state the CPU ADDRESS BUS (A_{15}-A_0) and DATA BUS (D_7-D_0) will be in their high impedance state. The CPU acknowledges its state with the HOLD ACKNOWLEDGE (HLDA) pin.
HLDA	O	**Hold Acknowledge:** The HLDA signal appears in response to the HOLD signal and indicates that the data and address bus will go to the high impedance state. The HLDA signal begins at: • T3 for READ memory or input. • The Clock Period following T3 for WRITE memory or OUTPUT operation. In either case, the HLDA signal appears after the rising edge of ϕ_2.
INTE	O	**Interrupt Enable:** Indicates the content of the internal interrupt enable flip/flop. This flip/flop may be set or reset by the Enable and Disable Interrupt instructions and inhibits interrupts from being accepted by the CPU when it is reset. It is automatically reset (disabling further interrupts) at time T1 of the instruction fetch cycle (M1) when an interrupt is accepted and is also reset by the RESET signal.
INT	I	**Interrupt Request:** The CPU recognizes an interrupt request on this line at the end of the current instruction or while halted. If the CPU is in the HOLD state or if the Interrupt Enable flip/flop is reset it will not honor the request.
RESET[1]	I	**Reset:** While the RESET signal is activated, the content of the program counter is cleared. After RESET, the program will start at location 0 in memory. The INTE and HLDA flip/flops are also reset. Note that the flags, accumulator, stack pointer, and registers are not cleared.
V_{SS}		**Ground:** Reference.
V_{DD}		**Power:** +12 ±5% Volts.
V_{CC}		**Power:** +5 ±5% Volts.
V_{BB}		**Power:** −5 ±5% Volts.
ϕ_1, ϕ_2		**Clock Phases:** 2 externally supplied clock phases. (non TTL compatible)

ABSOLUTE MAXIMUM RATINGS*

Temperature Under Bias . . . . . 0°C to +70° C
Storage Temperature . . . . . -65°C to +150°C
All Input or Output Voltages
With Respect to V_{BB} . . . . . -0.3V to +20V
V_{CC}, V_{DD} and V_{SS} With Respect to V_{BB} -0.3V to +20V
Power Dissipation 1.5W

NOTICE: Stresses above those listed under "Absolute Maximum Ratings" may cause permanent damage to the device. This is a stress rating only and functional operation of the device at these or any other conditions above those indicated in the operational sections of this specification is not implied. Exposure to absolute maximum rating conditions for extended periods may affect device reliability.

D.C. CHARACTERISTICS (T_A = 0°C to 70°C, V_{DD} = +12V ±5%, V_{CC} = +5V ±5%, V_{BB} = −5V ±5%, V_{SS} =0V; unless otherwise noted)

Symbol	Parameter	Min.	Typ.	Max.	Unit	Test Condition
V_{ILC}	Clock Input Low Voltage	V_{SS}−1		V_{SS}+0.8	V	
V_{IHC}	Clock Input High Voltage	9.0		V_{DD}+1	V	
V_{IL}	Input Low Voltage	V_{SS}−1		V_{SS}+0.8	V	
V_{IH}	Input High Voltage	3.3		V_{CC}+1	V	
V_{OL}	Output Low Voltage			0.45	V	I_{OL} = 1.9mA on all outputs,
V_{OH}	Output High Voltage	3.7			V	I_{OH} = -150μA.
$I_{DD\,(AV)}$	Avg. Power Supply Current (V_{DD})		40	70	mA	Operation
$I_{CC\,(AV)}$	Avg. Power Supply Current (V_{CC})		60	80	mA	T_{CY} = .48 μsec
$I_{BB\,(AV)}$	Avg. Power Supply Current (V_{BB})		.01	1	mA	
I_{IL}	Input Leakage			±10	μA	$V_{SS} \leq V_{IN} \leq V_{CC}$
I_{CL}	Clock Leakage			±10	μA	$V_{SS} \leq V_{CLOCK} \leq V_{DD}$
I_{DL} [2]	Data Bus Leakage in Input Mode			-100 -2.0	μA mA	$V_{SS} \leq V_{IN} \leq V_{SS}$ +0.8V V_{SS} +0.8V $\leq V_{IN} \leq V_{CC}$
I_{FL}	Address and Data Bus Leakage During HOLD			+10 -100	μA	$V_{ADDR/DATA} = V_{CC}$ $V_{ADDR/DATA} = V_{SS}$ + 0.45V

CAPACITANCE (T_A = 25°C, V_{CC} = V_{DD} =V_{SS} = 0V, V_{BB} = −5V)

Symbol	Parameter	Typ.	Max.	Unit	Test Condition
C_ϕ	Clock Capacitance	17	25	pf	f_c = 1 MHz
C_{IN}	Input Capacitance	6	10	pf	Unmeasured Pins
C_{OUT}	Output Capacitance	10	20	pf	Returned to V_{SS}

NOTES:

1. The RESET signal must be active for a minimum of 3 clock cycles.
2. ΔI supply / ΔT_A = -0.45%/°C.

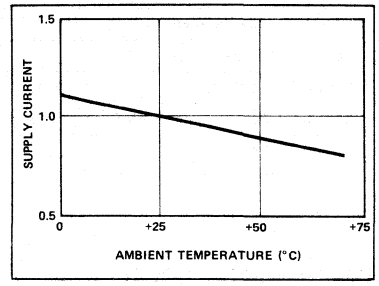

Typical Supply Current vs. Temperature, Normalized[3]

A.C. CHARACTERISTICS (8080A) (T_A = 0°C to 70°C, V_{DD} = +12V ±5%, V_{CC} = +5V ±5%, V_{BB} = −5V ±5%, V_{SS} = 0V; unless otherwise noted)

Symbol	Parameter	Min.	Max.	-1 Min.	-1 Max.	-2 Min.	-2 Max.	Unit	Test Condition
t_{CY}[3]	Clock Period	0.48	2.0	0.32	2.0	0.38	2.0	μsec	
t_r t_f	Clock Rise and Fall Time	0	50	0	25	0	50	nsec	
$t_{\phi 1}$	ϕ_1 Pulse Width	60		50		60		nsec	
$t_{\phi 2}$	ϕ_2 Pulse Width	220		145		175		nsec	
t_{D1}	Delay ϕ_1 to ϕ_2	0		0		0		nsec	
t_{D2}	Delay ϕ_2 to ϕ_1	70		60		70		nsec	
t_{D3}	Delay ϕ_1 to ϕ_2 Leading Edges	80		60		70		nsec	
t_{DA}	Address Output Delay From ϕ_2		200		150		175	nsec	C_L = 100 pF
t_{DD}	Data Output Delay From ϕ_2		220		180		200	nsec	
t_{DC}	Signal Output Delay From ϕ_2 or ϕ_2 (SYNC, WR, WAIT, HLDA)		120		110		120	nsec	C_L = 50 pF
t_{DF}	DBIN Delay From ϕ_2	25	140	25	130	25	140	nsec	
t_{DI}[1]	Delay for Input Bus to Enter Input Mode		t_{DF}		t_{DF}		t_{DF}	nsec	
t_{DS1}	Data Setup Time During ϕ_1 and DBIN	30		10		20		nsec	
t_{DS2}	Data Setup Time to ϕ_2 During DBIN	150		120		130		nsec	
t_{DH}[1]	Data Holt time From ϕ_2 During DBIN	[1]		[1]		[1]		nsec	
t_{IE}	INTE Output Delay From ϕ_2		200		200		200	nsec	C_L = 50 pF
t_{RS}	READY Setup Time During ϕ_2	120		90		90		nsec	
t_{HS}	HOLD Setup Time to ϕ_2	140		120		120		nsec	
t_{IS}	INT Setup Time During ϕ_2	120		100		100		nsec	
t_H	Hold Time From ϕ_2 (READY, INT, HOLD)	0		0		0		nsec	
t_{FD}	Delay to Float During Hold (Address and Data Bus)		120		120		120	nsec	
t_{AW}	Address Stable Prior to WR	[5]		[5]		[5]		nsec	C_L = 100 pF: Address, Data C_L = 50 pF: $\overline{WR}$,HLDA,DBIN
t_{DW}	Output Data Stable Prior to WR	[6]		[6]		[6]		nsec	
t_{WD}	Output Data Stable From WR	[7]		[7]		[7]		nsec	
t_{WA}	Address Stable From WR	[7]		[7]		[7]		nsec	
t_{HF}	HLDA to Float Delay	[8]		[8]		[8]		nsec	
t_{WF}	WR to Float Delay	[9]		[9]		[9]		nsec	
t_{AH}	Address Hold Time After DBIN During HLDA	−20		−20		−20		nsec	

A.C. TESTING LOAD CIRCUIT

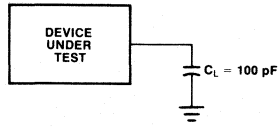

C_L = 100 pF
C_L INCLUDES JIG CAPACITANCE

WAVEFORMS

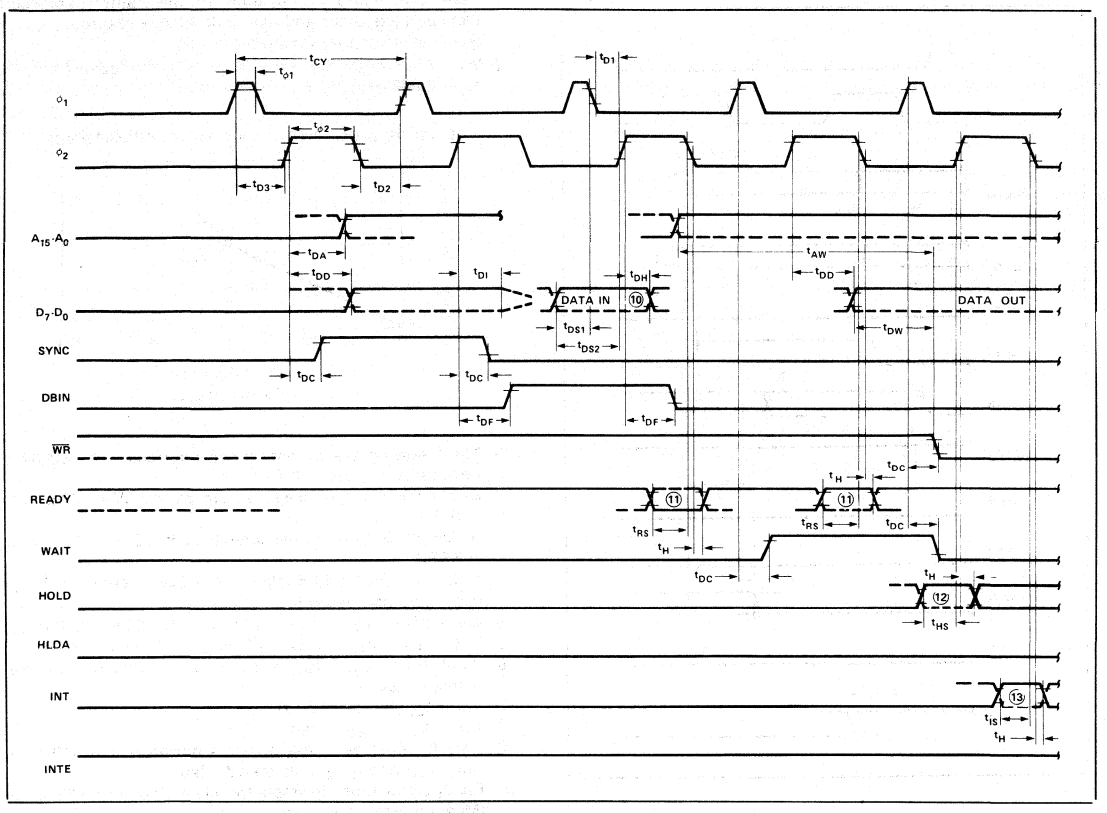

NOTE:
Timing measurements are made at the following reference voltages: CLOCK "1" = 8.0V, "0" = 1.0V; INPUTS "1" = 3.3V, "0" = 0.8V; OUTPUTS "1" = 2.0V, "0" = 0.8V.

WAVEFORMS (Continued)

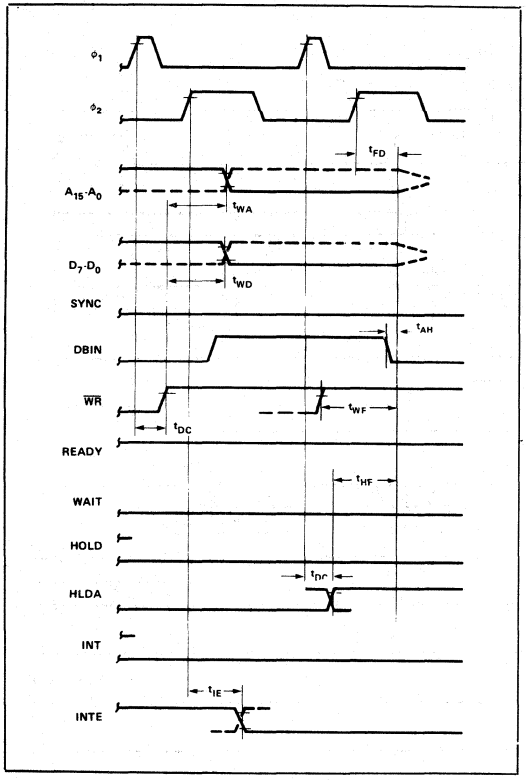

NOTES: (Parenthesis gives -1, -2 specifications, respectively)

1. Data input should be enabled with DBIN status. No bus conflict can then occur and data hold time is assured. t_{DH} = 50 ns or t_{DF}, whichever is less.
2. $t_{CY} = t_{D3} + t_{r\phi 2} + t_{\phi 2} + t_{f\phi 2} + t_{D2} + t_{r\phi 1} \geq 480$ ns (− 1:320 ns, − 2:380 ns).

TYPICAL Δ OUTPUT DELAY VS. Δ CAPACITANCE

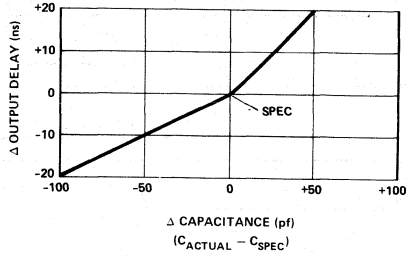

3. The following are relevant when interfacing the 8080A to devices having V_{IH} = 3.3V:
   a) Maximum output rise time from .8V to 3.3V = 100ns @ C_L = SPEC.
   b) Output delay when measured to 3.0V = SPEC +60ns @ C_L = SPEC.
   c) If C_L = SPEC, add .6ns/pF if $C_L > C_{SPEC}$, subtract .3ns/pF (from modified delay) if $C_L < C_{SPEC}$.
4. $t_{AW} = 2\,t_{CY} - t_{D3} - t_{r\phi 2} - 140$ ns (− 1:110 ns, − 2:130 ns).
5. $t_{DW} = t_{CY} - t_{D3} - t_{r\phi 2} - 170$ ns (− 1:150 ns, − 2:170 ns).
6. If not HLDA, $t_{WD} = t_{WA} = t_{D3} + t_{r\phi 2} + 10$ ns. If HLDA, $t_{WD} = t_{WA} = t_{WF}$.
7. $t_{HF} = t_{D3} + t_{r\phi 2} - 50$ ns).
8. $t_{WF} = t_{D3} + t_{r\phi 2} - 10$ns.
9. Data in must be stable for this period during DBIN T_3. Both t_{DS1} and t_{DS2} must be satisfied.
10. Ready signal must be stable for this period during T_2 or T_W. (Must be externally synchronized.)
11. Hold signal must be stable for this period during T_2 or T_W when entering hold mode, and during T_3, T_4, T_5 and T_{WH} when in hold mode. (External synchronization is not required.)
12. Interrupt signal must be stable during this period of the last clock cycle of any instruction in order to be recognized on the following instruction. (External synchronization is not required.)
13. This timing diagram shows timing relationships only; it does not represent any specific machine cycle.

INSTRUCTION SET

The accumulator group instructions include arithmetic and logical operators with direct, indirect, and immediate addressing modes.

Move, load, and store instruction groups provide the ability to move either 8 or 16 bits of data between memory, the six working registers and the accumulator using direct, indirect, and immediate addressing modes.

The ability to branch to different portions of the program is provided with jump, jump conditional, and computed jumps. Also the ability to call to and return from subroutines is provided both conditionally and unconditionally. The RESTART (or single byte call instruction) is useful for interrupt vector operation.

Double precision operators such as stack manipulation and double add instructions extend both the arithmetic and interrupt handling capability of the 8080A. The ability to increment and decrement memory, the six general registers and the accumulator is provided as well as extended increment and decrement instructions to operate on the register pairs and stack pointer. Further capability is provided by the ability to rotate the accumulator left or right through or around the carry bit.

Input and output may be accomplished using memory addresses as I/O ports or the directly addressed I/O provided for in the 8080A instruction set.

The following special instruction group completes the 8080A instruction set: the NOP instruction, HALT to stop processor execution and the DAA instructions provide decimal arithmetic capability. STC allows the carry flag to be directly set, and the CMC instruction allows it to be complemented. CMA complements the contents of the accumulator and XCHG exchanges the contents of two 16-bit register pairs directly.

Data and Instruction Formats

Data in the 8080A is stored in the form of 8-bit binary integers. All data transfers to the system data bus will be in the same format.

D_7	D_6	D_5	D_4	D_3	D_2	D_1	D_0

DATA WORD

The program instructions may be one, two, or three bytes in length. Multiple byte instructions must be stored in successive words in program memory. The instruction formats then depend on the particular operation executed.

One Byte Instructions

D_7	D_6	D_5	D_4	D_3	D_2	D_1	D_0	OP CODE

TYPICAL INSTRUCTIONS

Register to register, memory reference, arithmetic or logical, rotate, return, push, pop, enable or disable Interrupt instructions

Two Byte Instructions

D_7	D_6	D_5	D_4	D_3	D_2	D_1	D_0	OP CODE
D_7	D_6	D_5	D_4	D_3	D_2	D_1	D_0	OPERAND

Immediate mode or I/O instructions

Three Byte Instructions

D_7	D_6	D_5	D_4	D_3	D_2	D_1	D_0	OP CODE
D_7	D_6	D_5	D_4	D_3	D_2	D_1	D_0	LOW ADDRESS OR OPERAND 1
D_7	D_6	D_5	D_4	D_3	D_2	D_1	D_0	HIGH ADDRESS OR OPERAND 2

Jump, call or direct load and store instructions

For the 8080A a logic "1" is defined as a high level and a logic "0" is defined as a low level.

Table 2. Instruction Set Summary

Mnemonic	Instruction Code [1] D_7	D_6	D_5	D_4	D_3	D_2	D_1	D_0	Operations Description	Clock Cycles [2]
MOVE, LOAD, AND STORE										
MOVr1,r2	0	1	D	D	D	S	S	S	Move register to register	5
MOV M,r	0	1	1	1	0	S	S	S	Move register to memory	7
MOV r,M	0	1	D	D	D	1	1	0	Move memory to register	7
MVI r	0	0	D	D	D	1	1	0	Move immediate register	7
MVI M	0	0	1	1	0	1	1	0	Move immediate memory	10
LXI B	0	0	0	0	0	0	0	1	Load immediate register Pair B & C	10
LXI D	0	0	0	1	0	0	0	1	Load immediate register Pair D & E	10
LXI H	0	0	1	0	0	0	0	1	Load immediate register Pair H & L	10
STAX B	0	0	0	0	0	0	1	0	Store A indirect	7
STAX D	0	0	0	1	0	0	1	0	Store A indirect	7
LDAX B	0	0	0	0	1	0	1	0	Load A indirect	7
LDAX D	0	0	0	1	1	0	1	0	Load A indirect	7
STA	0	0	1	1	0	0	1	0	Store A direct	13
LDA	0	0	1	1	1	0	1	0	Load A direct	13
SHLD	0	0	1	0	0	0	1	0	Store H & L direct	16
LHLD	0	0	1	0	1	0	1	0	Load H & L direct	16
XCHG	1	1	1	0	1	0	1	1	Exchange D & E, H & L Registers	4
STACK OPS										
PUSH B	1	1	0	0	0	1	0	1	Push register Pair B & C on stack	11
PUSH D	1	1	0	1	0	1	0	1	Push register Pair D & E on stack	11
PUSH H	1	1	1	0	0	1	0	1	Push register Pair H & L on stack	11
PUSH PSW	1	1	1	1	0	1	0	1	Push A and Flags on stack	11
POP B	1	1	0	0	0	0	0	1	Pop register Pair B & C off stack	10
POP D	1	1	0	1	0	0	0	1	Pop register Pair D & E off stack	10
POP H	1	1	1	0	0	0	0	1	Pop register Pair H & L off stack	10
POP PSW	1	1	1	1	0	0	0	1	Pop A and Flags off stack	10
XTHL	1	1	1	0	0	0	1	1	Exchange top of stack, H & L	18
SPHL	1	1	1	1	1	0	0	1	H & L to stack pointer	5
LXI SP	0	0	1	1	0	0	0	1	Load immediate stack pointer	10
INX SP	0	0	1	1	0	0	1	1	Increment stack pointer	5
DCX SP	0	0	1	1	1	0	1	1	Decrement stack pointer	5
JUMP										
JMP	1	1	0	0	0	0	1	1	Jump unconditional	10
JC	1	1	0	1	1	0	1	0	Jump on carry	10
JNC	1	1	0	1	0	0	1	0	Jump on no carry	10
JZ	1	1	0	0	1	0	1	0	Jump on zero	10
JNZ	1	1	0	0	0	0	1	0	Jump on no zero	10
JP	1	1	1	1	0	0	1	0	Jump on positive	10
JM	1	1	1	1	1	0	1	0	Jump on minus	10
JPE	1	1	1	0	1	0	1	0	Jump on parity even	10
JPO	1	1	1	0	0	0	1	0	Jump on parity odd	10
PCHL	1	1	1	0	1	0	0	1	H & L to program counter	5
CALL										
CALL	1	1	0	0	1	1	0	1	Call unconditional	17
CC	1	1	0	1	1	1	0	0	Call on carry	11/17
CNC	1	1	0	1	0	1	0	0	Call on no carry	11/17
CZ	1	1	0	0	1	1	0	0	Call on zero	11/17
CNZ	1	1	0	0	0	1	0	0	Call on no zero	11/17
CP	1	1	1	1	0	1	0	0	Call on positive	11/17
CM	1	1	1	1	1	1	0	0	Call on minus	11/17
CPE	1	1	1	0	1	1	0	0	Call on parity even	11/17
CPO	1	1	1	0	0	1	0	0	Call on parity odd	11/17
RETURN										
RET	1	1	0	0	1	0	0	1	Return	10
RC	1	1	0	1	1	0	0	0	Return on carry	5/11
RNC	1	1	0	1	0	0	0	0	Return on no carry	5/11
RZ	1	1	0	0	1	0	0	0	Return on zero	5/11
RNZ	1	1	0	0	0	0	0	0	Return on no zero	5/11
RP	1	1	1	1	0	0	0	0	Return on positive	5/11
RM	1	1	1	1	1	0	0	0	Return on minus	5/11
RPE	1	1	1	0	1	0	0	0	Return on parity even	5/11
RPO	1	1	1	0	0	0	0	0	Return on parity odd	5/11
RESTART										
RST	1	1	A	A	A	1	1	1	Restart	11
INCREMENT AND DECREMENT										
INR r	0	0	D	D	D	1	0	0	Increment register	5
DCR r	0	0	D	D	D	1	0	1	Decrement register	5
INR M	0	0	1	1	0	1	0	0	Increment memory	10
DCR M	0	0	1	1	0	1	0	1	Decrement memory	10
INX B	0	0	0	0	0	0	1	1	Increment B & C registers	5
INX D	0	0	0	1	0	0	1	1	Increment D & E registers	5
INX H	0	0	1	0	0	0	1	1	Increment H & L registers	5
DCX B	0	0	0	0	1	0	1	1	Decrement B & C	5
DCX D	0	0	0	1	1	0	1	1	Decrement D & E	5
DCX H	0	0	1	0	1	0	1	1	Decrement H & L	5
ADD										
ADD r	1	0	0	0	0	S	S	S	Add register to A	4
ADC r	1	0	0	0	1	S	S	S	Add register to A with carry	4
ADD M	1	0	0	0	0	1	1	0	Add memory to A	7
ADC M	1	0	0	0	1	1	1	0	Add memory to A with carry	7
ADI	1	1	0	0	0	1	1	0	Add immediate to A	7
ACI	1	1	0	0	1	1	1	0	Add immediate to A with carry	7
DAD B	0	0	0	0	1	0	0	1	Add B & C to H & L	10
DAD D	0	0	0	1	1	0	0	1	Add D & E to H & L	10
DAD H	0	0	1	0	1	0	0	1	Add H & L to H & L	10
DAD SP	0	0	1	1	1	0	0	1	Add stack pointer to H & L	10

Summary of Processor Instructions (Cont.)

Mnemonic	Instruction Code [1] D_7	D_6	D_5	D_4	D_3	D_2	D_1	D_0	Operations Description	Clock Cycles [2]
SUBTRACT										
SUB r	1	0	0	1	0	S	S	S	Subtract register from A	4
SBB r	1	0	0	1	1	S	S	S	Subtract register from A with borrow	4
SUB M	1	0	0	1	0	1	1	0	Subtract memory from A	7
SBB M	1	0	0	1	1	1	1	0	Subtract memory from A with borrow	7
SUI	1	1	0	1	0	1	1	0	Subtract immediate from A	7
SBI	1	1	0	1	1	1	1	0	Subtract immediate from A with borrow	7
LOGICAL										
ANA r	1	0	1	0	0	S	S	S	And register with A	4
XRA r	1	0	1	0	1	S	S	S	Exclusive Or register with A	4
ORA r	1	0	1	1	0	S	S	S	Or register with A	4
CMP r	1	0	1	1	1	S	S	S	Compare register with A	4
ANA M	1	0	1	0	0	1	1	0	And memory with A	7
XRA M	1	0	1	0	1	1	1	0	Exclusive Or memory with A	7
ORA M	1	0	1	1	0	1	1	0	Or memory with A	7
CMP M	1	0	1	1	1	1	1	0	Compare memory with A	7
ANI	1	1	1	0	0	1	1	0	And immediate with A	7
XRI	1	1	1	0	1	1	1	0	Exclusive Or immediate with A	7
ORI	1	1	1	1	0	1	1	0	Or immediate with A	7
CPI	1	1	1	1	1	1	1	0	Compare immediate with A	7

Mnemonic	Instruction Code [1] D_7	D_6	D_5	D_4	D_3	D_2	D_1	D_0	Operations Description	Clock Cycles [2]
ROTATE										
RLC	0	0	0	0	0	1	1	1	Rotate A left	4
RRC	0	0	0	0	1	1	1	1	Rotate A right	4
RAL	0	0	0	1	0	1	1	1	Rotate A left through carry	4
RAR	0	0	0	1	1	1	1	1	Rotate A right through carry	4
SPECIALS										
CMA	0	0	1	0	1	1	1	1	Complement A	4
STC	0	0	1	1	0	1	1	1	Set carry	4
CMC	0	0	1	1	1	1	1	1	Complement carry	4
DAA	0	0	1	0	0	1	1	1	Decimal adjust A	4
INPUT/OUTPUT										
IN	1	1	0	1	1	0	1	1	Input	10
OUT	1	1	0	1	0	0	1	1	Output	10
CONTROL										
EI	1	1	1	1	1	0	1	1	Enable Interrupts	4
DI	1	1	1	1	0	0	1	1	Disable Interrupt	4
NOP	0	0	0	0	0	0	0	0	No-operation	4
HLT	0	1	1	1	0	1	1	0	Halt	7

NOTES:

1. DDD or SSS: B=000, C=001, D=010, E=011, H=100, L=101, Memory=110, A=111.
2. Two possible cycle times (6/12) indicate instruction cycles dependent on condition flags.

*All mnemonics copyright ©Intel Corporation 1977

8085AH/8085AH-2/8085AH-1
8-BIT HMOS MICROPROCESSORS

- **Single +5V Power Supply with 10% Voltage Margins**
- **3 MHz, 5 MHz and 6 MHz Selections Available**
- **20% Lower Power Consumption than 8085A for 3 MHz and 5 MHz**
- **1.3 μs Instruction Cycle (8085AH); 0.8 μs (8085AH-2); 0.67 μs (8085AH-1)**
- **100% Compatible with 8085A**
- **100% Software Compatible with 8080A**
- **On-Chip Clock Generator (with External Crystal, LC or RC Network)**
- **On-Chip System Controller; Advanced Cycle Status Information Available for Large System Control**
- **Four Vectored Interrupt Inputs (One is Non-Maskable) Plus an 8080A-Compatible Interrupt**
- **Serial In/Serial Out Port**
- **Decimal, Binary and Double Precision Arithmetic**
- **Direct Addressing Capability to 64K Bytes of Memory**

The Intel® 8085AH is a complete 8 bit parallel Central Processing Unit (CPU) implemented in N-channel, depletion load, silicon gate technology (HMOS). Its instruction set is 100% software compatible with the 8080A microprocessor, and it is designed to improve the present 8080A's performance by higher system speed. Its high level of system integration allows a minimum system of three IC's [8085AH (CPU), 8156H (RAM/IO) and 8355/8755A (ROM/PROM/IO)] while maintaining total system expandability. The 8085AH-2 and 8085AH-1 are faster versions of the 8085AH.

The 8085AH incorporates all of the features that the 8224 (clock generator) and 8228 (system controller) provided for the 8080A, thereby offering a high level of system integration.

The 8085AH uses a multiplexed data bus. The address is split between the 8 bit address bus and the 8 bit data bus. The on-chip address latches of 8155H/8156H/8355/8755A memory products allow a direct interface with the 8085AH.

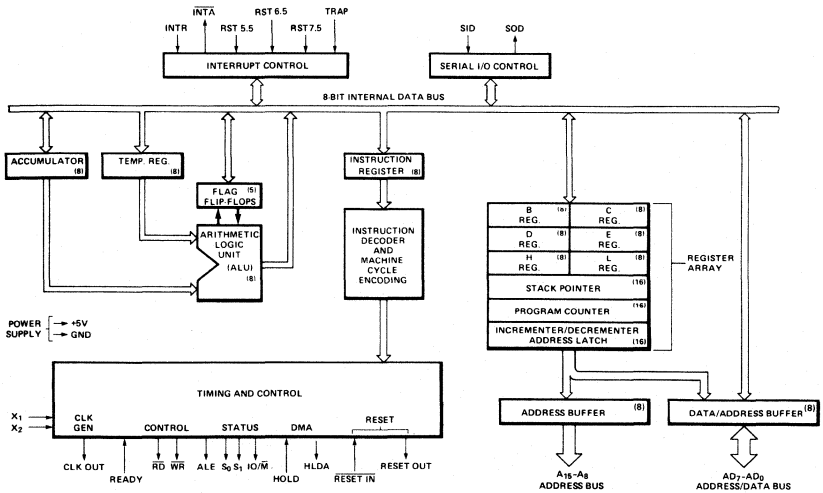

Figure 1. 8085AH CPU Functional Block Diagram

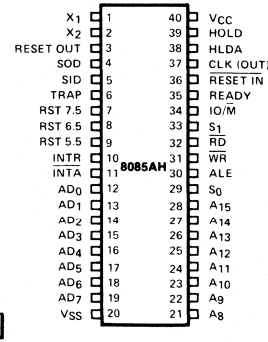

Figure 2. 8085AH Pin Configuration

Intel Corporation Assumes No Responsibilty for the Use of Any Circuitry Other Than Circuitry Embodied in an Intel Product. No Other Circuit Patent Licenses are Implied.
©INTEL CORPORATION, 1981.

Table 1. Pin Description

Symbol	Type	Name and Function
A_8–A_{15}	O	**Address Bus:** The most significant 8 bits of the memory address or the 8 bits of the I/O address, 3-stated during Hold and Halt modes and during RESET.
$AD_{0—7}$	I/O	**Multiplexed Address/Data Bus:** Lower 8 bits of the memory address (or I/O address) appear on the bus during the first clock cycle (T state) of a machine cycle. It then becomes the data bus during the second and third clock cycles.
ALE	O	**Address Latch Enable:** It occurs during the first clock state of a machine cycle and enables the address to get latched into the on-chip latch of peripherals. The falling edge of ALE is set to guarantee setup and hold times for the address information. The falling edge of ALE can also be used to strobe the status information. ALE is never 3-stated.
S_0, S_1, and IO/$\overline{M}$	O	**Machine Cycle Status:** IO/$\overline{M}$ S_1 S_0 Status 0 0 1 Memory write 0 1 0 Memory read 1 0 1 I/O write 1 1 0 I/O read 0 1 1 Opcode fetch 1 1 1 Opcode fetch 1 1 1 Interrupt Acknowledge * 0 0 Halt * X X Hold * X X Reset * = 3-state (high impedance) X = unspecified S_1 can be used as an advanced R/$\overline{W}$ status. IO/$\overline{M}$, S_0 and S_1 become valid at the beginning of a machine cycle and remain stable throughout the cycle. The falling edge of ALE may be used to latch the state of these lines.
$\overline{RD}$	O	**Read Control:** A low level on $\overline{RD}$ indicates the selected memory or I/O device is to be read and that the Data Bus is available for the data transfer, 3-stated during Hold and Halt modes and during RESET.
$\overline{WR}$	O	**Write Control:** A low level on $\overline{WR}$ indicates the data on the Data Bus is to be written into the selected memory or I/O location. Data is set up at the trailing edge of $\overline{WR}$. 3-stated during Hold and Halt modes and during RESET.

Symbol	Type	Name and Function
READY	I	**Ready:** If READY is high during a read or write cycle, it indicates that the memory or peripheral is ready to send or receive data. If READY is low, the cpu will wait an integral number of clock cycles for READY to go high before completing the read or write cycle. READY must conform to specified setup and hold times.
HOLD	I	**Hold:** Indicates that another master is requesting the use of the address and data buses. The cpu, upon receiving the hold request, will relinquish the use of the bus as soon as the completion of the current bus transfer. Internal processing can continue. The processor can regain the bus only after the HOLD is removed. When the HOLD is acknowledged, the Address, Data $\overline{RD}$, $\overline{WR}$, and IO/$\overline{M}$ lines are 3-stated.
HLDA	O	**Hold Acknowledge:** Indicates that the cpu has received the HOLD request and that it will relinquish the bus in the next clock cycle. HLDA goes low after the Hold request is removed. The cpu takes the bus one half clock cycle after HLDA goes low.
INTR	I	**Interrupt Request:** Is used as a general purpose interrupt. It is sampled only during the next to the last clock cycle of an instruction and during Hold and Halt states. If it is active, the Program Counter (PC) will be inhibited from incrementing and an $\overline{INTA}$ will be issued. During this cycle a RESTART or CALL instruction can be inserted to jump to the interrupt service routine. The INTR is enabled and disabled by software. It is disabled by Reset and immediately after an interrupt is accepted.
$\overline{INTA}$	O	**Interrupt Acknowledge:** Is used instead of (and has the same timing as) $\overline{RD}$ during the Instruction cycle after an INTR is accepted. It can be used to activate an 8259A Interrupt chip or some other interrupt port.
RST 5.5 RST 6.5 RST 7.5	I	**Restart Interrupts:** These three inputs have the same timing as INTR except they cause an internal RESTART to be automatically inserted. The priority of these interrupts is ordered as shown in Table 2. These interrupts have a higher priority than INTR. In addition, they may be individually masked out using the SIM instruction.

Table 1. Pin Description (Continued)

Symbol	Type	Name and Function
TRAP	I	**Trap:** Trap interrupt is a non-maskable RESTART interrupt. It is recognized at the same time as INTR or RST 5.5-7.5. It is unaffected by any mask or Interrupt Enable. It has the highest priority of any interrupt. (See Table 2.)
$\overline{\text{RESET IN}}$	I	**Reset In:** Sets the Program Counter to zero and resets the Interrupt Enable and HLDA flip-flops. The data and address buses and the control lines are 3-stated during RESET and because of the asynchronous nature of RESET, the processor's internal registers and flags may be altered by RESET with unpredictable results. $\overline{\text{RESET IN}}$ is a Schmitt-triggered input, allowing connection to an R-C network for power-on RESET delay (see Figure 3). Upon power-up, $\overline{\text{RESET IN}}$ must remain low for at least 10 ms after minimum V_{CC} has been reached. For proper reset operation after the power-up duration, $\overline{\text{RESET IN}}$ should be kept low a minimum of three clock periods. The CPU is held in the reset condition as long as $\overline{\text{RESET IN}}$ is applied.
RESET OUT	O	**Reset Out:** Reset Out indicates cpu is being reset. Can be used as a system reset. The signal is synchronized to the processor clock and lasts an integral number of clock periods.
X_1, X_2	I	**X_1 and X_2:** Are connected to a crystal, LC, or RC network to drive the internal clock generator. X_1 can also be an external clock input from a logic gate. The input frequency is divided by 2 to give the processor's internal operating frequency.
CLK	O	**Clock:** Clock output for use as a system clock. The period of CLK is twice the X_1, X_2 input period.
SID	I	**Serial Input Data Line:** The data on this line is loaded into accumulator bit 7 whenever a RIM instruction is executed.
SOD	O	**Serial Output Data Line:** The output SOD is set or reset as specified by the SIM instruction.
V_{CC}		**Power:** +5 volt supply.
V_{SS}		**Ground:** Reference.

Table 2. Interrupt Priority, Restart Address, and Sensitivity

Name	Priority	Address Branched To (1) When Interrupt Occurs	Type Trigger
TRAP	1	24H	Rising edge AND high level until sampled.
RST 7.5	2	3CH	Rising edge (latched).
RST 6.5	3	34H	High level until sampled.
RST 5.5	4	2CH	High level until sampled.
INTR	5	See Note (2).	High level until sampled.

NOTES:
1. The processor pushes the PC on the stack before branching to the indicated address.
2. The address branched to depends on the instruction provided to the cpu when the interrupt is acknowledged.

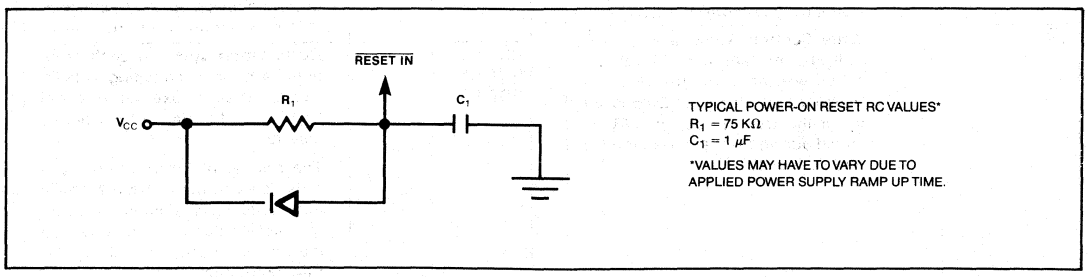

Figure 3. Power-On Reset Circuit

FUNCTIONAL DESCRIPTION

The 8085AH is a complete 8-bit parallel central processor. It is designed with N-channel, depletion load, silicon gate technology (HMOS), and requires a single +5 volt supply. Its basic clock speed is 3 MHz (8085AH), 5 MHz (8085AH-2), or 6 MHz (8085AH-1), thus improving on the present 8080A's performance with higher system speed. Also it is designed to fit into a minimum system of three IC's: The CPU (8085AH), a RAM/IO (8156H), and a ROM or EPROM/IO chip (8355 or 8755A).

The 8085AH has twelve addressable 8-bit registers. Four of them can function only as two 16-bit register pairs. Six others can be used interchangeably as 8-bit registers or as 16-bit register pairs. The 8085AH register set is as follows:

Mnemonic	Register	Contents
ACC or A	Accumulator	8 bits
PC	Program Counter	16-bit address
BC,DE,HL	General-Purpose Registers; data pointer (HL)	8 bits x 6 or 16 bits x 3
SP	Stack Pointer	16-bit address
Flags or F	Flag Register	5 flags (8-bit space)

The 8085AH uses a multiplexed Data Bus. The address is split between the higher 8-bit Address Bus and the lower 8-bit Address/Data Bus. During the first T state (clock cycle) of a machine cycle the low order address is sent out on the Address/Data bus. These lower 8 bits may be latched externally by the Address Latch Enable signal (ALE). During the rest of the machine cycle the data bus is used for memory or I/O data.

The 8085AH provides $\overline{RD}$, $\overline{WR}$, S_0, S_1, and IO/$\overline{M}$ signals for bus control. An Interrupt Acknowledge signal ($\overline{INTA}$) is also provided. HOLD and all Interrupts are synchronized with the processor's internal clock. The 8085AH also provides Serial Input Data (SID) and Serial Output Data (SOD) lines for simple serial interface.

In addition to these features, the 8085AH has three maskable, vector interrupt pins, one nonmaskable TRAP interrupt, and a bus vectored interrupt, INTR.

INTERRUPT AND SERIAL I/O

The 8085AH has 5 interrupt inputs: INTR, RST 5.5, RST 6.5, RST 7.5, and TRAP. INTR is identical in function to the 8080A INT. Each of the three RESTART inputs, 5.5, 6.5, and 7.5, has a programmable mask. TRAP is also a RESTART interrupt but it is nonmaskable.

The three maskable interrupts cause the internal execution of RESTART (saving the program counter in the stack and branching to the RESTART address) if the interrupts are enabled and if the interrupt mask is not set. The nonmaskable TRAP causes the internal execution of a RESTART vector independent of the state of the interrupt enable or masks. (See Table 2.)

There are two different types of inputs in the restart interrupts. RST 5.5 and RST 6.5 are *high level-sensitive* like INTR (and INT on the 8080) and are recognized with the same timing as INTR. RST 7.5 is *rising edge-sensitive.*

For RST 7.5, only a pulse is required to set an internal flip-flop which generates the internal interrupt request (a normally high level signal with a low going pulse is recommended for highest system noise immunity). The RST 7.5 request flip-flop remains set until the request is serviced. Then it is reset automatically. This flip-flop may also be reset by using the SIM instruction or by issuing a $\overline{RESET\ IN}$ to the 8085AH. The RST 7.5 internal flip-flop will be set by a pulse on the RST 7.5 pin even when the RST 7.5 interrupt is masked out.

The status of the three RST interrupt masks can only be affected by the SIM instruction and $\overline{RESET\ IN}$. (See SIM, Chapter 5 of the MCS-80/85 User's Manual.)

The interrupts are arranged in a fixed priority that determines which interrupt is to be recognized if more than one is pending as follows: TRAP—highest priority, RST 7.5, RST 6.5, RST 5.5, INTR—lowest priority. This priority scheme does not take into account the priority of a routine that was started by a higher priority interrupt. RST 5.5 can interrupt an RST 7.5 routine if the interrupts are re-enabled before the end of the RST 7.5 routine.

The TRAP interrupt is useful for catastrophic events such as power failure or bus error. The TRAP input is recognized just as any other interrupt but has the highest priority. It is not affected by any flag or mask. The TRAP input is both *edge and level sensitive*. The TRAP input must go high and remain high until it is acknowledged. It will not be recognized again until it goes low, then high again. This avoids any false triggering due to noise or logic glitches. Figure 4 illustrates the TRAP interrupt request circuitry within the 8085AH. Note that the servicing of any interrupt (TRAP, RST 7.5, RST 6.5, RST 5.5, INTR) disables all future interrupts (except TRAPs) until an EI instruction is executed.

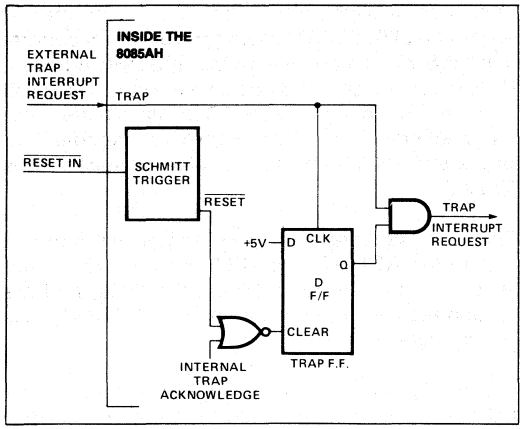

Figure 4. TRAP and RESET IN Circuit

The TRAP interrupt is special in that it disables interrupts, but preserves the previous interrupt enable status. Performing the first RIM instruction following a TRAP interrupt allows you to determine whether interrupts were enabled or disabled prior to the TRAP. All subsequent RIM instructions provide current interrupt enable status. Performing a RIM instruction following INTR, or RST 5.5–7.5 will provide current Interrupt Enable status, revealing that Interrupts are disabled. See the description of the RIM instruction in the MCS-80/85 Family User's Manual.

The serial I/O system is also controlled by the RIM and SIM instructions. SID is read by RIM, and SIM sets the SOD data.

DRIVING THE X_1 AND X_2 INPUTS

You may drive the clock inputs of the 8085AH, 8085AH-2, or 8085AH-1 with a crystal, an LC tuned circuit, an RC network, or an external clock source. The crystal frequency must be at least 1 MHz, and must be twice the desired internal clock frequency; hence, the 8085AH is operated with a 6 MHz crystal (for 3 MHz clock), the 8085AH-2 operated with a 10 MHz crystal (for 5 MHz clock), and the 8085AH-1 can be operated with a 12 MHz crystal (for 6 MHz clock). If a crystal is used, it must have the following characteristics:

Parallel resonance at twice the clock frequency desired
C_L (load capacitance) $\leq$ 30 pF
C_S (shunt capacitance) $\leq$ 7 pF
R_S (equivalent shunt resistance) $\leq$ 75 Ohms
Drive level: 10 mW
Frequency tolerance: $\pm$.005% (suggested)

Note the use of the 20 pF capacitor between X_2 and ground. This capacitor is required with crystal frequencies below 4 MHz to assure oscillator startup at the correct frequency. A parallel-resonant LC circuit may be used as the frequency-determining network for the 8085AH, providing that its frequency tolerance of approximately $\pm$10% is acceptable. The components are chosen from the formula:

$$f = \frac{1}{2\pi\sqrt{L(C_{ext} + C_{int})}}$$

To minimize variations in frequency, it is recommended that you choose a value for C_{ext} that is at least twice that of C_{int}, or 30 pF. The use of an LC circuit is not recommended for frequencies higher than approximately 5 MHz.

An RC circuit may be used as the frequency-determining network for the 8085AH if maintaining a precise clock frequency is of no importance. Variations in the on-chip timing generation can cause a wide variation in frequency when using the RC mode. Its advantage is its low component cost. The driving frequency generated by the circuit shown is approximately 3 MHz. It is not recommended that frequencies greatly higher or lower than this be attempted.

Figure 5 shows the recommended clock driver circuits. Note in D and E that pullup resistors are required to assure that the high level voltage of the input is at least 4V and maximum low level voltage of 0.8V.

For driving frequencies up to and including 6 MHz you may supply the driving signal to X_1 and leave X_2 open-circuited (Figure 5D). If the driving frequency is from 6 MHz to 12 MHz, stability of the clock generator will be improved by driving both X_1 and X_2 with a push-pull source (Figure 5E). To prevent self-oscillation of the 8085AH, be sure that X_2 is not coupled back to X_1 through the driving circuit.

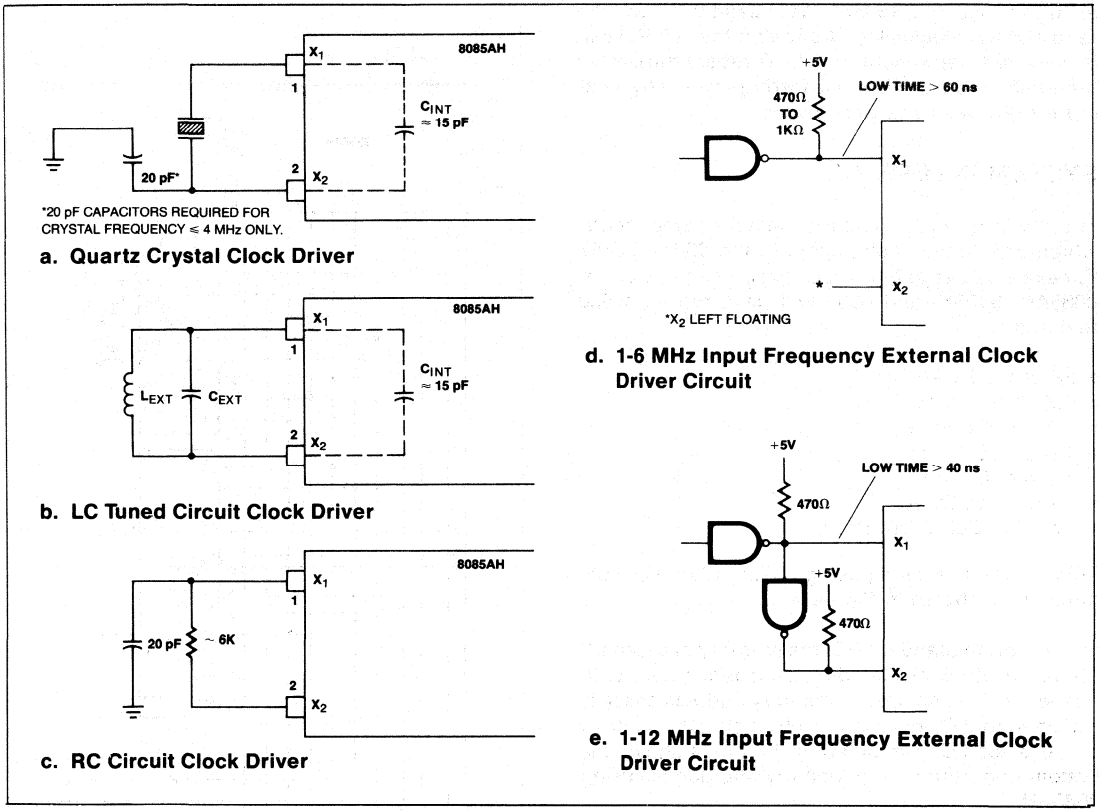

Figure 5. Clock Driver Circuits

GENERATING AN 8085AH WAIT STATE

If your system requirements are such that slow memories or peripheral devices are being used, the circuit shown in Figure 6 may be used to insert one WAIT state in each 8085AH machine cycle.

The D flip-flops should be chosen so that
- CLK is rising edge-triggered
- CLEAR is low-level active.

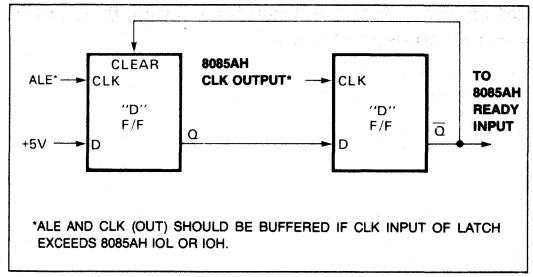

Figure 6. Generation of a Wait State for 8085AH CPU

As in the 8080, the READY line is used to extend the read and write pulse lengths so that the 8085AH can be used with slow memory. HOLD causes the CPU to relinquish the bus when it is through with it by floating the Address and Data Buses.

SYSTEM INTERFACE

The 8085AH family includes memory components, which are directly compatible to the 8085AH CPU. For example, a system consisting of the three chips, 8085AH, 8156H, and 8355 will have the following features:

- 2K Bytes ROM
- 256 Bytes RAM
- 1 Timer/Counter
- 4 8-bit I/O Ports
- 1 6-bit I/O Port
- 4 Interrupt Levels
- Serial In/Serial Out Ports

This minimum system, using the standard I/O technique is as shown in Figure 7.

In addition to standard I/O, the memory mapped I/O offers an efficient I/O addressing technique. With this technique, an area of memory address space is assigned for I/O address, thereby, using the memory address for I/O manipulation. Figure 8 shows the system configuration of Memory Mapped I/O using 8085AH.

The 8085AH CPU can also interface with the standard memory that does *not* have the multiplexed address/data bus. It will require a simple 8212 (8-bit latch) as shown in Figure 9.

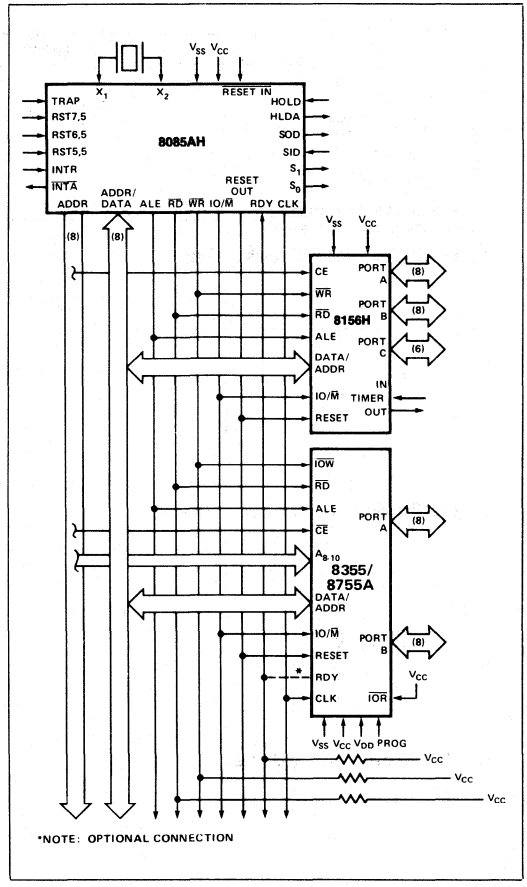

Figure 7. 8085AH Minimum System (Standard I/O Technique)

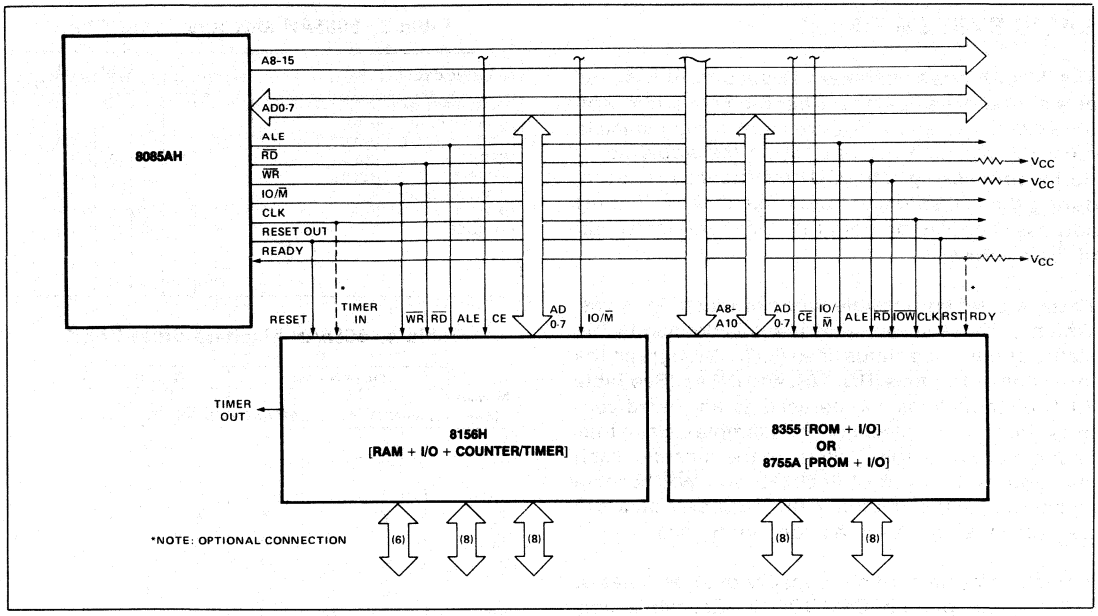

Figure 8. MCS-85® Minimum System (Memory Mapped I/O)

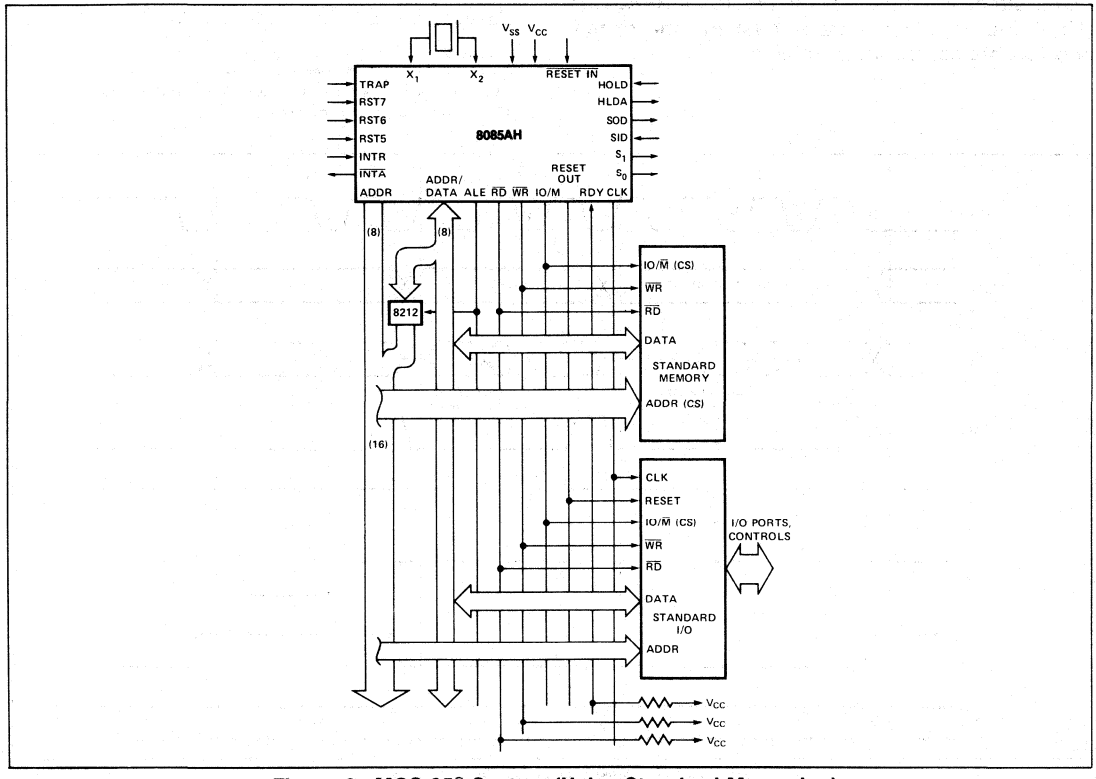

Figure 9. MCS-85® System (Using Standard Memories)

BASIC SYSTEM TIMING

The 8085AH has a multiplexed Data Bus. ALE is used as a strobe to sample the lower 8-bits of address on the Data Bus. Figure 10 shows an instruction fetch, memory read and I/O write cycle (as would occur during processing of the OUT instruction). Note that during the I/O write and read cycle that the I/O port address is copied on both the upper and lower half of the address.

There are seven possible types of machine cycles. Which of these seven takes place is defined by the status of the three status lines ($IO/\overline{M}$, S_1, S_0) and the three control signals ($\overline{RD}$, $\overline{WR}$, and $\overline{INTA}$). (See Table 3.) The status lines can be used as advanced controls (for device selection, for example), since they become active at the T_1 state, at the outset of each machine cycle. Control lines $\overline{RD}$ and $\overline{WR}$ become active later, at the time when the transfer of data is to take place, so are used as command lines.

A machine cycle normally consists of three T states, with the exception of OPCODE FETCH, which normally has either four or six T states (unless WAIT or HOLD states are forced by the receipt of $\overline{READY}$ or HOLD inputs). Any T state must be one of ten possible states, shown in Table 4.

Table 3. 8085AH Machine Cycle Chart

MACHINE CYCLE		STATUS			CONTROL		
		$IO/\overline{M}$	S1	S0	$\overline{RD}$	$\overline{WR}$	$\overline{INTA}$
OPCODE FETCH	(OF)	0	1	1	0	1	1
MEMORY READ	(MR)	0	1	0	0	1	1
MEMORY WRITE	(MW)	0	0	1	1	0	1
I/O READ	(IOR)	1	1	0	0	1	1
I/O WRITE	(IOW)	1	0	1	1	0	1
ACKNOWLEDGE OF INTR	(INA)	1	1	1	1	1	0
BUS IDLE	(BI): DAD	0	1	0	1	1	1
	ACK. OF RST,TRAP	1	1	1	1	1	1
	HALT	TS	0	0	TS	TS	1

Table 4. 8085AH Machine State Chart

Machine State	Status & Buses				Control		
	S1,S0	$IO/\overline{M}$	A_8-A_{15}	AD_0-AD_7	$\overline{RD}$,$\overline{WR}$	$\overline{INTA}$	ALE
T_1	X	X	X	X	1	1	1*
T_2	X	X	X	X	X	X	0
T_{WAIT}	X	X	X	X	X	X	0
T_3	X	X	X	X	X	X	0
T_4	1	0†	X	TS	1	1	0
T_5	1	0†	X	TS	1	1	0
T_6	1	0†	X	TS	1	1	0
T_{RESET}	X	TS	TS	TS	TS	1	0
T_{HALT}	0	TS	TS	TS	TS	1	0
T_{HOLD}	X	TS	TS	TS	TS	1	0

0 = Logic "0" TS = High Impedance
1 = Logic "1" X = Unspecified

* ALE not generated during 2nd and 3rd machine cycles of DAD instruction.
† IO/M = 1 during T_4-T_6 of INA machine cycle.

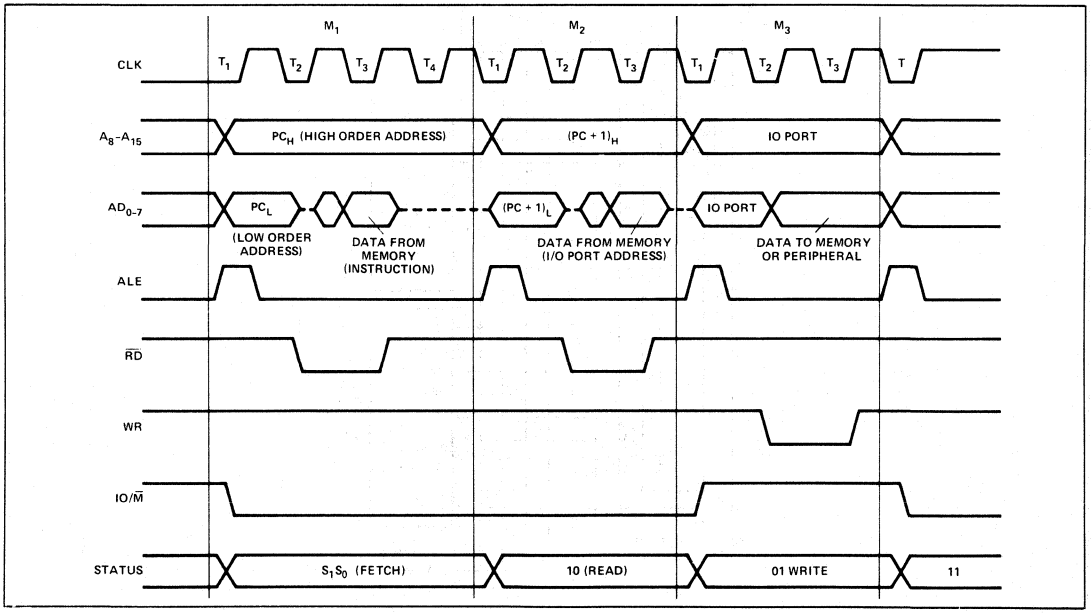

Figure 10. 8085AH Basic System Timing

ABSOLUTE MAXIMUM RATINGS*

Ambient Temperature Under Bias ..... 0°C to 70°C
Storage Temperature ..... −65°C to +150°C
Voltage on Any Pin
With Respect to Ground ..... −0.5V to +7V
Power Dissipation ..... 1.5 Watt

NOTICE: Stresses above those listed under "Absolute Maximum Ratings" may cause permanent damage to the device. This is a stress rating only and functional operation of the device at these or any other conditions above those indicated in the operational sections of this specification is not implied. Exposure to absolute maximum rating conditions for extended periods may affect device reliability.

D.C. CHARACTERISTICS

8085AH, 8085AH-2: (T_A = 0°C to 70°C, V_{CC} = 5V ±10%, V_{SS} =0V; unless otherwise specified)
8085AH-1: (T_A = 0°C to 70°C, V_{CC} = 5V ±5%, V_{SS} = 0V; unless otherwise specified)

Symbol	Parameter	Min.	Max.	Units	Test Conditions
V_{IL}	Input Low Voltage	−0.5	+0.8	V	
V_{IH}	Input High Voltage	2.0	V_{CC} +0.5	V	
V_{OL}	Output Low Voltage		0.45	V	I_{OL} = 2mA
V_{OH}	Output High Voltage	2.4		V	I_{OH} = −400μA
I_{CC}	Power Supply Current		135	mA	8085AH, 8085AH-2
			200	mA	8085AH-1 (Preliminary)
I_{IL}	Input Leakage		±10	μA	$0 \leq V_{IN} \leq V_{CC}$
I_{LO}	Output Leakage		±10	μA	$0.45V \leq V_{OUT} \leq V_{CC}$
V_{ILR}	Input Low Level, RESET	−0.5	+0.8	V	
V_{IHR}	Input High Level, RESET	2.4	V_{CC} +0.5	V	
V_{HY}	Hysteresis, RESET	0.25		V	

A.C. CHARACTERISTICS

8085AH, 8085AH-2: (T_A = 0°C to 70°C, V_{CC} = 5V ±10%, V_{SS} = 0V)
8085AH-1: (T_A = 0°C to 70°C, V_{CC} = 5V ±5%, V_{SS} = 0V)

Symbol	Parameter	8085AH[2] (Final)		8085AH-2[2] (Final)		8085AH-1 (Preliminary)		Units
		Min.	Max.	Min.	Max.	Min.	Max.	
t_{CYC}	CLK Cycle Period	320	2000	200	2000	167	2000	ns
t_1	CLK Low Time (Standard CLK Loading)	80		40		20		ns
t_2	CLK High Time (Standard CLK Loading)	120		70		50		ns
t_r, t_f	CLK Rise and Fall Time		30		30		30	ns
t_{XKR}	X_1 Rising to CLK Rising	25	120	25	100	20	100	ns
t_{XKF}	X_1 Rising to CLK Falling	30	150	30	110	25	110	ns
t_{AC}	A_{8-15} Valid to Leading Edge of Control[1]	270		115		70		ns
t_{ACL}	A_{0-7} Valid to Leading Edge of Control	240		115		60		ns
t_{AD}	A_{0-15} Valid to Valid Data In		575		350		225	ns
t_{AFR}	Address Float After Leading Edge of $\overline{READ}$ ($\overline{INTA}$)		0		0		0	ns
t_{AL}	A_{8-15} Valid Before Trailing Edge of ALE[1]	115		50		25		ns

A.C. CHARACTERISTICS (Continued)

Symbol	Parameter	8085AH[2] (Final)		8085AH-2[2] (Final)		8085AH-1 (Preliminary)		Units
		Min.	Max.	Min.	Max.	Min.	Max.	
t_{ALL}	A_{0-7} Valid Before Trailing Edge of ALE	90		50		25		ns
t_{ARY}	READY Valid from Address Valid		220		100		40	ns
t_{CA}	Address (A_{8-15}) Valid After Control	120		60		30		ns
t_{CC}	Width of Control Low ($\overline{RD}$, $\overline{WR}$, $\overline{INTA}$) Edge of ALE	400		230		150		ns
t_{CL}	Trailing Edge of Control to Leading Edge of ALE	50		25		0		ns
t_{DW}	Data Valid to Trailing Edge of $\overline{WRITE}$	420		230		140		ns
t_{HABE}	HLDA to Bus Enable		210		150		150	ns
t_{HABF}	Bus Float After HLDA		210		150		150	ns
t_{HACK}	HLDA Valid to Trailing Edge of CLK	110		40		0		ns
t_{HDH}	HOLD Hold Time	0		0		0		ns
t_{HDS}	HOLD Setup Time to Trailing Edge of CLK	170		120		120		ns
t_{INH}	INTR Hold Time	0		0		0		ns
t_{INS}	INTR, RST, and TRAP Setup Time to Falling Edge of CLK	160		150		150		ns
t_{LA}	Address Hold Time After ALE	100		50		20		ns
t_{LC}	Trailing Edge of ALE to Leading Edge of Control	130		60		25		ns
t_{LCK}	ALE Low During CLK High	100		50		15		ns
t_{LDR}	ALE to Valid Data During Read		460		270		175	ns
t_{LDW}	ALE to Valid Data During Write		200		120		110	ns
t_{LL}	ALE Width	140		80		50		ns
t_{LRY}	ALE to READY Stable		110		30		10	ns
t_{RAE}	Trailing Edge of $\overline{READ}$ to Re-Enabling of Address	150		90		50		ns
t_{RD}	$\overline{READ}$ (or $\overline{INTA}$) to Valid Data		300		150		75	ns
t_{RV}	Control Trailing Edge to Leading Edge of Next Control	400		220		160		ns
t_{RDH}	Data Hold Time After $\overline{READ}$ $\overline{INTA}$	0		0		0		ns
t_{RYH}	READY Hold Time	0		0		5		ns
t_{RYS}	READY Setup Time to Leading Edge of CLK	110		100		100		ns
t_{WD}	Data Valid After Trailing Edge of $\overline{WRITE}$	100		60		30		ns
t_{WDL}	LEADING Edge of $\overline{WRITE}$ to Data Valid		40		20		30	ns

NOTES:
1. A_8–A_{15} address Specs apply IO/$\overline{M}$, S_0, and S_1 except A_8–A_{15} are undefined during T_4–T_6 of OF cycle whereas IO/$\overline{M}$, S_0, and S_1 are stable.
2. *Test Conditions:* t_{CYC} = 320 ns (8085AH)/200 ns (8085AH-2);/ 167 ns (8085AH-1); C_L = 150 pF.
3. For all output timing where $C_L \neq 150$ pF use the following correction factors:
   25 pF ≤ C_L < 150 pF: −0.10 ns/pF
   150 pF < C_L ≤ 300 pF: +0.30 ns/pF
4. Output timings are measured with purely capacitive load.
5. To calculate timing specifications at other values of t_{CYC} use Table 5.

A.C. TESTING INPUT, OUTPUT WAVEFORM

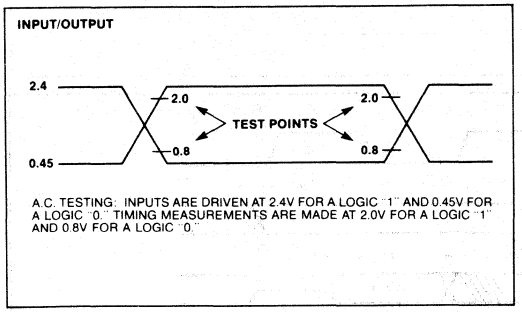

A.C. TESTING LOAD CIRCUIT

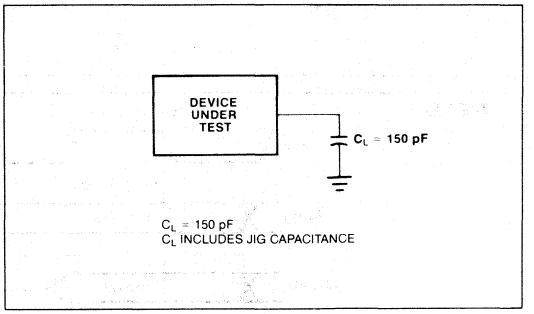

Table 5. Bus Timing Specification as a T_{CYC} Dependent

Symbol	8085AH	8085AH-2	8085AH-1	
t_{AL}	(1/2) T − 45	(1/2) T − 50	(1/2) T − 58	Minimum
t_{LA}	(1/2) T − 60	(1/2) T − 50	(1/2) T − 63	Minimum
t_{LL}	(1/2) T − 20	(1/2) T − 20	(1/2) T − 33	Minimum
t_{LCK}	(1/2) T − 60	(1/2) T − 50	(1/2) T − 68	Minimum
t_{LC}	(1/2) T − 30	(1/2) T − 40	(1/2) T − 58	Minimum
t_{AD}	(5/2 + N) T − 225	(5/2 + N) T − 150	(5/2 + N) T − 192	Maximum
t_{RD}	(3/2 + N) T − 180	(3/2 + N) T − 150	(3/2 + N) T − 175	Maximum
t_{RAE}	(1/2) T − 10	(1/2) T − 10	(1/2) T − 33	Minimum
t_{CA}	(1/2) T − 40	(1/2) T − 40	(1/2) T − 53	Minimum
t_{DW}	(3/2 + N) T − 60	(3/2 + N) T − 70	(3/2 + N) T − 110	Minimum
t_{WD}	(1/2) T − 60	(1/2) T − 40	(1/2) T − 53	Minimum
t_{CC}	(3/2 + N) T − 80	(3/2 + N) T − 70	(3/2 + N) T − 100	Minimum
t_{CL}	(1/2) T − 110	(1/2) T − 75	(1/2) T − 83	Minimum
t_{ARY}	(3/2) T − 260	(3/2) T − 200	(3/2) T − 210	Maximum
t_{HACK}	(1/2) T − 50	(1/2) T − 60	(1/2) T − 83	Minimum
t_{HABF}	(1/2) T + 50	(1/2) T + 50	(1/2) T + 67	Maximum
t_{HABE}	(1/2) T + 50	(1/2) T + 50	(1/2) T + 67	Maximum
t_{AC}	(2/2) T − 50	(2/2) T − 85	(2/2) T − 97	Minimum
t_1	(1/2) T − 80	(1/2) T − 60	(1/2) T − 63	Minimum
t_2	(1/2) T − 40	(1/2) T − 30	(1/2) T − 33	Minimum
t_{RV}	(3/2) T − 80	(3/2) T− 80	(3/2) T − 90	Minimum
t_{LDR}	(4/2) T − 180	(4/2) T − 130	(4/2) T − 159	Maximum

NOTE: N is equal to the total WAIT states. T = t_{CYC}.

WAVEFORMS

CLOCK

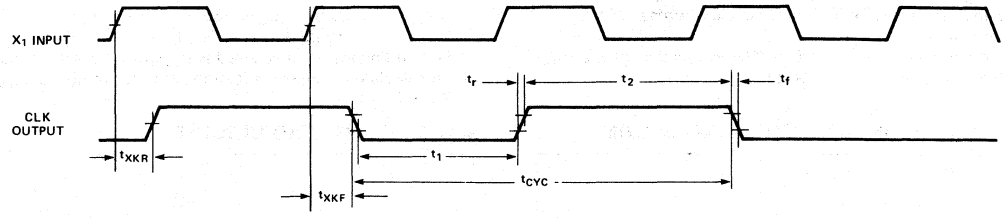

READ

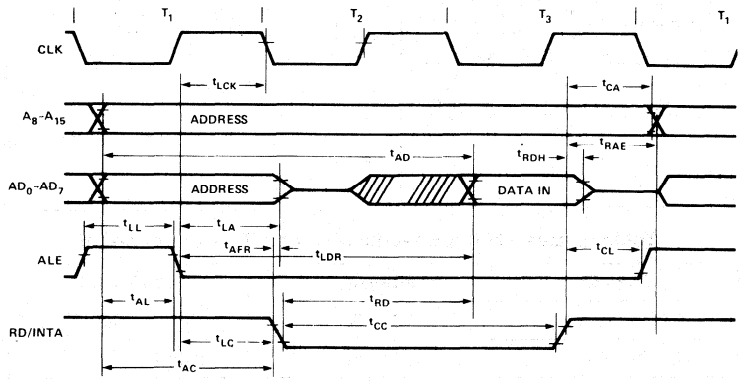

WRITE

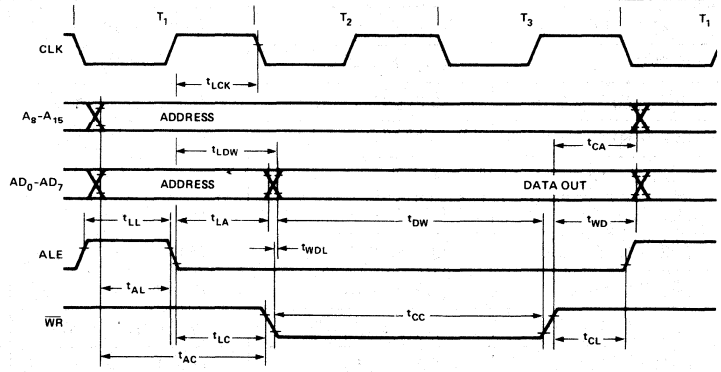

HOLD

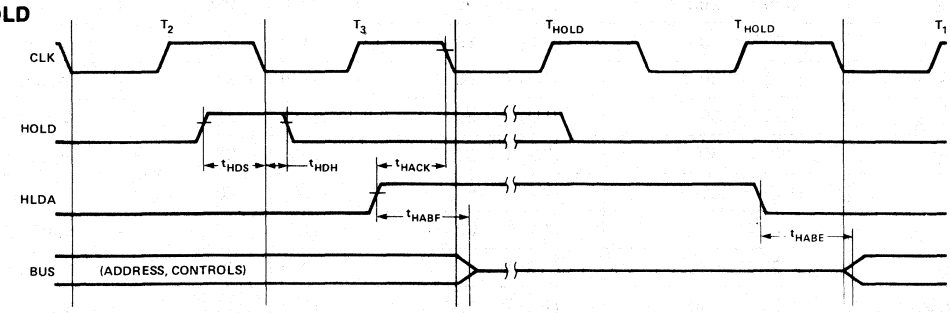

AFN-01835B

WAVEFORMS (Continued)

READ OPERATION WITH WAIT CYCLE (TYPICAL) — SAME READY TIMING APPLIES TO WRITE

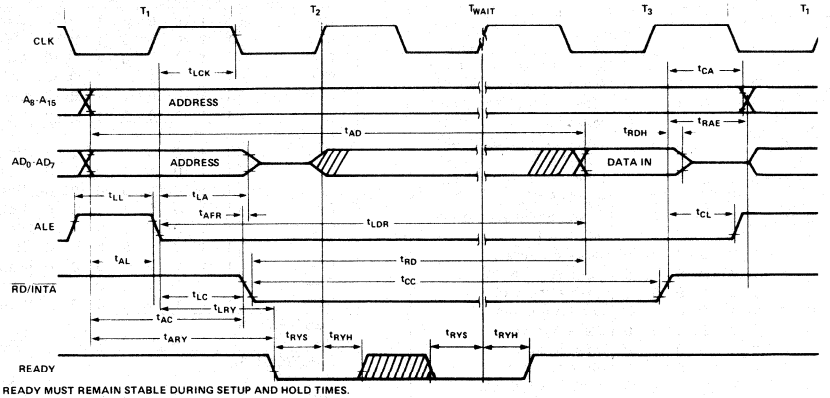

NOTE 1: READY MUST REMAIN STABLE DURING SETUP AND HOLD TIMES.

INTERRUPT AND HOLD

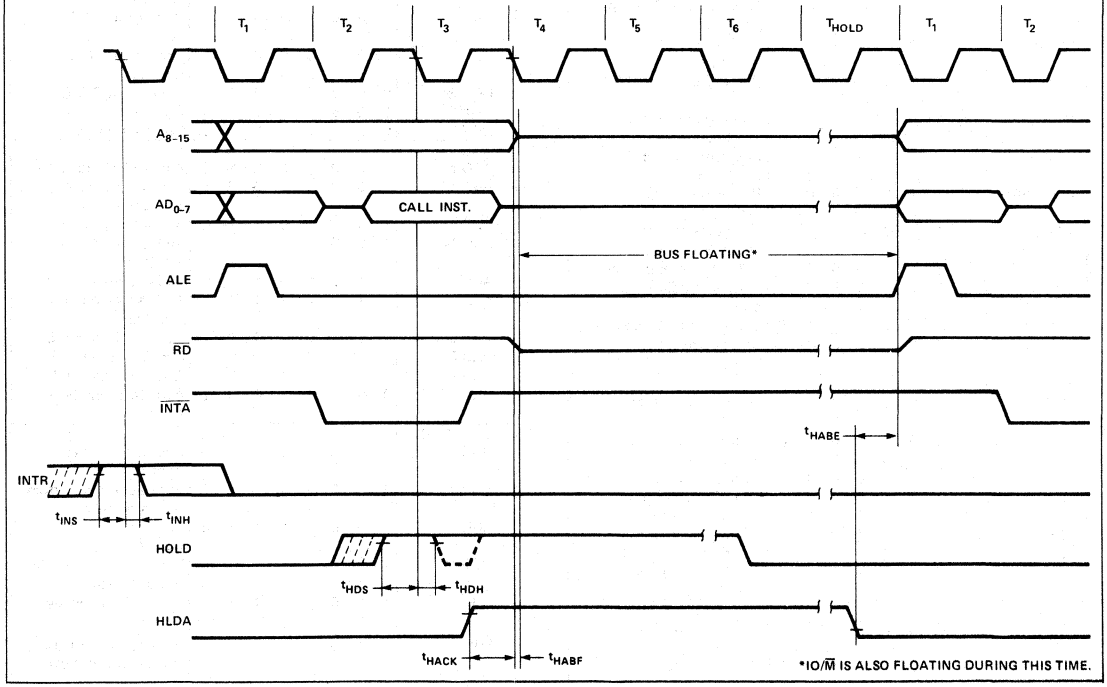

*IO/M IS ALSO FLOATING DURING THIS TIME.

Table 6. Instruction Set Summary

Mnemonic	D_7	D_6	D_5	D_4	D_3	D_2	D_1	D_0	Operations Description
MOVE, LOAD, AND STORE									
MOVr1 r2	0	1	D	D	D	S	S	S	Move register to register
MOV M,r	0	1	1	1	0	S	S	S	Move register to memory
MOV r,M	0	1	D	D	D	1	1	0	Move memory to register
MVI r	0	0	D	D	D	1	1	0	Move immediate register
MVI M	0	0	1	1	0	1	1	0	Move immediate memory
LXI B	0	0	0	0	0	0	0	1	Load immediate register Pair B & C
LXI D	0	0	0	1	0	0	0	1	Load immediate register Pair D & E
LXI H	0	0	1	0	0	0	0	1	Load immediate register Pair H & L
STAX B	0	0	0	0	0	0	1	0	Store A indirect
STAX D	0	0	0	1	0	0	1	0	Store A indirect
LDAX B	0	0	0	0	1	0	1	0	Load A indirect
LDAX D	0	0	0	1	1	0	1	0	Load A indirect
STA	0	0	1	1	0	0	1	0	Store A direct
LDA	0	0	1	1	1	0	1	0	Load A direct
SHLD	0	0	1	0	0	0	1	0	Store H & L direct
LHLD	0	0	1	0	1	0	1	0	Load H & L direct
XCHG	1	1	1	0	1	0	1	1	Exchange D & E, H & L Registers
STACK OPS									
PUSH B	1	1	0	0	0	1	0	1	Push register Pair B & C on stack
PUSH D	1	1	0	1	0	1	0	1	Push register Pair D & E on stack
PUSH H	1	1	1	0	0	1	0	1	Push register Pair H & L on stack
PUSH PSW	1	1	1	1	0	1	0	1	Push A and Flags on stack
POP B	1	1	0	0	0	0	0	1	Pop register Pair B & C off stack
POP D	1	1	0	1	0	0	0	1	Pop register Pair D & E off stack
POP H	1	1	1	0	0	0	0	1	Pop register Pair H & L off stack
POP PSW	1	1	1	1	0	0	0	1	Pop A and Flags off stack
XTHL	1	1	1	0	0	0	1	1	Exchange top of stack, H & L
SPHL	1	1	1	1	1	0	0	1	H & L to stack pointer
LXI SP	0	0	1	1	0	0	0	1	Load immediate stack pointer
INX SP	0	0	1	1	0	0	1	1	Increment stack pointer
DCX SP	0	0	1	1	1	0	1	1	Decrement stack pointer
JUMP									
JMP	1	1	0	0	0	0	1	1	Jump unconditional
JC	1	1	0	1	1	0	1	0	Jump on carry
JNC	1	1	0	1	0	0	1	0	Jump on no carry
JZ	1	1	0	0	1	0	1	0	Jump on zero
JNZ	1	1	0	0	0	0	1	0	Jump on no zero
JP	1	1	1	1	0	0	1	0	Jump on positive
JM	1	1	1	1	1	0	1	0	Jump on minus
JPE	1	1	1	0	1	0	1	0	Jump on parity even
JPO	1	1	1	0	0	0	1	0	Jump on parity odd
PCHL	1	1	1	0	1	0	0	1	H & L to program counter
CALL									
CALL	1	1	0	0	1	1	0	1	Call unconditional
CC	1	1	0	1	1	1	0	0	Call on carry
CNC	1	1	0	1	0	1	0	0	Call on no carry
CZ	1	1	0	0	1	1	0	0	Call on zero
CNZ	1	1	0	0	0	1	0	0	Call on no zero
CP	1	1	1	1	0	1	0	0	Call on positive
CM	1	1	1	1	1	1	0	0	Call on minus
CPE	1	1	1	0	1	1	0	0	Call on parity even
CPO	1	1	1	0	0	1	0	0	Call on parity odd
RETURN									
RET	1	1	0	0	1	0	0	1	Return
RC	1	1	0	1	1	0	0	0	Return on carry
RNC	1	1	0	1	0	0	0	0	Return on no carry
RZ	1	1	0	0	1	0	0	0	Return on zero
RNZ	1	1	0	0	0	0	0	0	Return on no zero
RP	1	1	1	1	0	0	0	0	Return on positive
RM	1	1	1	1	1	0	0	0	Return on minus
RPE	1	1	1	0	1	0	0	0	Return on parity even
RPO	1	1	1	0	0	0	0	0	Return on parity odd
RESTART									
RST	1	1	A	A	A	1	1	1	Restart
INPUT/OUTPUT									
IN	1	1	0	1	1	0	1	1	Input
OUT	1	1	0	1	0	0	1	1	Output
INCREMENT AND DECREMENT									
INR r	0	0	D	D	D	1	0	0	Increment register
DCR r	0	0	D	D	D	1	0	1	Decrement register
INR M	0	0	1	1	0	1	0	0	Increment memory
DCR M	0	0	1	1	0	1	0	1	Decrement memory
INX B	0	0	0	0	0	0	1	1	Increment B & C registers
INX D	0	0	0	1	0	0	1	1	Increment D & E registers
INX H	0	0	1	0	0	0	1	1	Increment H & L registers
DCX B	0	0	0	0	1	0	1	1	Decrement B & C
DCX D	0	0	0	1	1	0	1	1	Decrement D & E
DCX H	0	0	1	0	1	0	1	1	Decrement H & L
ADD									
ADD r	1	0	0	0	0	S	S	S	Add register to A
ADC r	1	0	0	0	1	S	S	S	Add register to A with carry
ADD M	1	0	C	0	0	1	1	0	Add memory to A
ADC M	1	0	0	0	1	1	1	0	Add memory to A with carry
ADI	1	1	0	0	0	1	1	0	Add immediate to A
ACI	1	1	0	0	1	1	1	0	Add immediate to A with carry
DAD B	0	0	0	0	1	0	0	1	Add B & C to H & L
DAD D	0	0	0	1	1	0	0	1	Add D & E to H & L
DAD H	0	0	1	0	1	0	0	1	Add H & L to H & L
DAD SP	0	0	1	1	1	0	0	1	Add stack pointer to H & L
SUBTRACT									
SUB r	1	0	0	1	0	S	S	S	Subtract register from A
SBB r	1	0	0	1	1	S	S	S	Subtract register from A with borrow
SUB M	1	0	0	1	0	1	1	0	Subtract memory from A
SBB M	1	0	0	1	1	1	1	0	Subtract memory from A with borrow
SUI	1	1	0	1	0	1	1	0	Subtract immediate from A
SBI	1	1	0	1	1	1	1	0	Subtract immediate from A with borrow

Table 6. Instruction Set Summary (Continued)

Mnemonic	Instruction Code D_7	D_6	D_5	D_4	D_3	D_2	D_1	D_0	Operations Description
LOGICAL									
ANA r	1	0	1	0	0	S	S	S	And register with A
XRA r	1	0	1	0	1	S	S	S	Exclusive OR register with A
ORA r	1	0	1	1	0	S	S	S	OR register with A
CMP r	1	0	1	1	1	S	S	S	Compare register with A
ANA M	1	0	1	0	0	1	1	0	And memory with A
XRA M	1	0	1	0	1	1	1	0	Exclusive OR memory with A
ORA M	1	0	1	1	0	1	1	0	OR memory with A
CMP M	1	0	1	1	1	1	1	0	Compare memory with A
ANI	1	1	1	0	0	1	1	0	And immediate with A
XRI	1	1	1	0	1	1	1	0	Exclusive OR immediate with A
ORI	1	1	1	1	0	1	1	0	OR immediate with A
CPI	1	1	1	1	1	1	1	0	Compare immediate with A
ROTATE									
RLC	0	0	0	0	0	1	1	1	Rotate A left
RRC	0	0	0	0	1	1	1	1	Rotate A right
RAL	0	0	0	1	0	1	1	1	Rotate A left through carry
RAR	0	0	0	1	1	1	1	1	Rotate A right through carry

Mnemonic	Instruction Code D_7	D_6	D_5	D_4	D_3	D_2	D_1	D_0	Operations Description
SPECIALS									
CMA	0	0	1	0	1	1	1	1	Complement A
STC	0	0	1	1	0	1	1	1	Set carry
CMC	0	0	1	1	1	1	1	1	Complement carry
DAA	0	0	1	0	0	1	1	1	Decimal adjust A
CONTROL									
EI	1	1	1	1	1	0	1	1	Enable Interrupts
DI	1	1	1	1	0	0	1	1	Disable Interrupt
NOP	0	0	0	0	0	0	0	0	No-operation
HLT	0	1	1	1	0	1	1	0	Halt
NEW 8085A INSTRUCTIONS									
RIM	0	0	1	0	0	0	0	0	Read Interrupt Mask
SIM	0	0	1	1	0	0	0	0	Set Interrupt Mask

NOTES:
1. DDS or SSS: B 000, C 001, D 010, E011, H 100, L 101, Memory 110, A 111.
2. Two possible cycle times (6/12) indicate instruction cycles dependent on condition flags.

*All mnemonics copyrighted ©Intel Corporation 1976.

8085A/8085A-2
SINGLE CHIP 8-BIT N-CHANNEL MICROPROCESSORS

- **Single +5V Power Supply**
- **100% Software Compatible with 8080A**
- **1.3 μs Instruction Cycle (8085A); 0.8 μs (8085A-2)**
- **On-Chip Clock Generator (with External Crystal, LC or RC Network)**
- **On-Chip System Controller; Advanced Cycle Status Information Available for Large System Control**
- **Four Vectored Interrupt Inputs (One is Non-Maskable) Plus an 8080A-Compatible Interrupt**
- **Serial In/Serial Out Port**
- **Decimal, Binary and Double Precision Arithmetic**
- **Direct Addressing Capability to 64k Bytes of Memory**

The Intel® 8085A is a complete 8 bit parallel Central Processing Unit (CPU). Its instruction set is 100% software compatible with the 8080A microprocessor, and it is designed to improve the present 8080A's performance by higher system speed. Its high level of system integration allows a minimum system of three IC's [8085A (CPU), 8156 (RAM/IO) and 8355/8755A (ROM/PROM/IO)] while maintaining total system expandability. The 8085A-2 is a faster version of the 8085A.

The 8085A incorporates all of the features that the 8224 (clock generator) and 8228 (system controller) provided for the 8080A, thereby offering a high level of system integration.

The 8085A uses a multiplexed data bus. The address is split between the 8 bit address bus and the 8 bit data bus. The on-chip address latches of 8155/8156/8355/8755A memory products allow a direct interface with the 8085A.

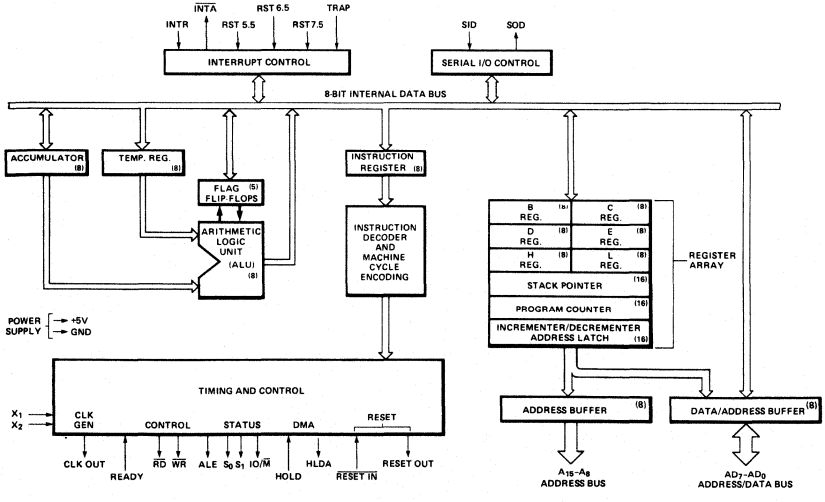

Figure 1. 8085A CPU Functional Block Diagram

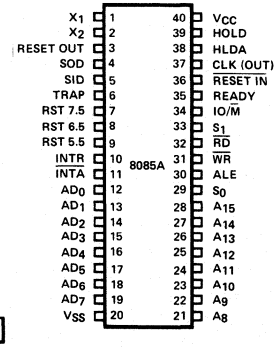

Figure 2. 8085A Pin Configuration

ABSOLUTE MAXIMUM RATINGS*

Ambient Temperature Under Bias. . . . . 0°C to 70°C
Storage Temperature . . . . . –65°C to +150°C
Voltage on Any Pin
With Respect to Ground . . . . . –0.5V to +7V
Power Dissipation . . . . . 1.5 Watt

**NOTICE: Stresses above those listed under "Absolute Maximum Ratings" may cause permanent damage to the device. This is a stress rating only and functional operation of the device at these or any other conditions above those indicated in the operational sections of this specification is not implied. Exposure to absolute maximum rating conditions for extended periods may affect device reliability.*

D.C. CHARACTERISTICS (T_A = 0°C to 70°C, V_{CC} = 0V ±5%, V_{SS} = 0V; unless otherwise specified)

Symbol	Parameter	Min.	Max.	Units	Test Conditions
V_{IL}	Input Low Voltage	-0.5	+0.8	V	
V_{IH}	Input High Voltage	2.0	V_{CC}+0.5	V	
V_{OL}	Output Low Voltage		0.45	V	I_{OL} = 2mA
V_{OH}	Output High Voltage	2.4		V	I_{OH} = -400μA
I_{CC}	Power Supply Current		170	mA	
I_{IL}	Input Leakage		±10	μA	$0 \leqslant V_{IN} \leqslant V_{CC}$
I_{LO}	Output Leakage		±10	μA	$0.45V \leqslant V_{out} \leqslant V_{CC}$
V_{ILR}	Input Low Level, RESET	-0.5	+0.8	V	
V_{IHR}	Input High Level, RESET	2.4	V_{CC} +0.5	V	
V_{HY}	Hysteresis, RESET	0.25		V	

A.C. CHARACTERISTICS (T_A = 0°C to 70°C, V_{CC} = 0V ±5%, V_{SS} = 0V)

Symbol	Parameter	8085A[2]		8085A-2[2]		Units
		Min.	Max.	Min.	Max.	
t_{CYC}	CLK Cycle Period	320	2000	200	2000	ns
t_1	CLK Low Time (Standard CLK Loading)	80		40		ns
t_2	CLK High Time (Standard CLK Loading)	120		70		ns
t_r, t_f	CLK Rise and Fall Time		30		30	ns
t_{XKR}	X_1 Rising to CLK Rising	30	120	30	100	ns
t_{XKF}	X_1 Rising to CLK Falling	30	150	30	110	ns
t_{AC}	A_{8-15} Valid to Leading Edge of Control[1]	270		115		ns
t_{ACL}	A_{0-7} Valid to Leading Edge of Control	240		115		ns
t_{AD}	A_{0-15} Valid to Valid Data In		575		350	ns
t_{AFR}	Address Float After Leading Edge of $\overline{READ}$ ($\overline{INTA}$)		0		0	ns
t_{AL}	A_{8-15} Valid Before Trailing Edge of ALE[1]	115		50		ns
t_{ALL}	A_{0-7} Valid Before Trailing Edge of ALE	90		50		ns
t_{ARY}	READY Valid from Address Valid		220		100	ns
t_{CA}	Address (A_{8-15}) Valid After Control	120		60		ns
t_{CC}	Width of Control Low ($\overline{RD}$, $\overline{WR}$, $\overline{INTA}$) Edge of ALE	400		230		ns
t_{CL}	Trailing Edge of Control to Leading Edge of ALE	50		25		ns
t_{DW}	Data Valid to Trailing Edge of $\overline{WRITE}$	420		230		ns
t_{HABE}	HLDA to Bus Enable		210		150	ns
t_{HABF}	Bus Float After HLDA		210		150	ns
t_{HACK}	HLDA Valid to Trailing Edge of CLK	110		40		ns
t_{HDH}	HOLD Hold Time	0		0		ns
t_{HDS}	HOLD Setup Time to Trailing Edge of CLK	170		120		ns
t_{INH}	INTR Hold Time	0		0		ns
t_{INS}	INTR, RST, and TRAP Setup Time to Falling Edge of CLK	160		150		ns
t_{LA}	Address Hold Time After ALE	100		50		ns
t_{LC}	Trailing Edge of ALE to Leading Edge of Control	130		60		ns
t_{LCK}	ALE Low During CLK High	100		50		ns
t_{LDR}	ALE to Valid Data During Read		460		270	ns
t_{LDW}	ALE to Valid Data During Write		200		120	ns
t_{LL}	ALE Width	140		80		ns
t_{LRY}	ALE to READY Stable		110		30	ns

A.C. CHARACTERISTICS (Continued)

Symbol	Parameter	8085A[2]		8085A-2[2]		Units
		Min.	Max.	Min.	Max.	
t_{RAE}	Trailing Edge of $\overline{READ}$ to Re-Enabling of Address	150		90		ns
t_{RD}	$\overline{READ}$ (or $\overline{INTA}$) to Valid Data		300		150	ns
t_{RV}	Control Trailing Edge to Leading Edge of Next Control	400		220		ns
t_{RDH}	Data Hold Time After $\overline{READ}$ $\overline{INTA}$[7]	0		0		ns
t_{RYH}	READY Hold Time	0		0		ns
t_{RYS}	READY Setup Time to Leading Edge of CLK	110		100		ns
t_{WD}	Data Valid After Trailing Edge of $\overline{WRITE}$	100		60		ns
t_{WDL}	LEADING Edge of WRITE to Data Valid		40		20	ns

NOTES:

1. A_8-A_{15} address Specs apply to IO/$\overline{M}$, S_0, and S_1 except A_8-A_{15} are undefined during T_4-T_6 of OF cycle whereas IO/$\overline{M}$, S_0, andS_1 are stable.
2. Test conditions: t_{CYC} = 320 ns (8085A)/200 ns (8085A-2); C_L = 150 pF.
3. For all output timing where C_L = 150 pF use the following correction factors:
   25 pF ≤ C_L < 150 pF: −0.10 ns/pF
   150 pF < C_L ≤ 300 pF: +0.30 ns/pF
4. Output timings are measured with purely capacitive load.
5. All timings are measured at output votage V_L = 0.8V, V_H = 2.0V, and 1.5V with 20 ns rise and fall time on inputs.
6. To calculate timing specifications at other values of t_{CYC} use Table 7.
7. Data hold time is guaranteed under all loading conditions.

A.C. TESTING INPUT, OUTPUT WAVEFORM

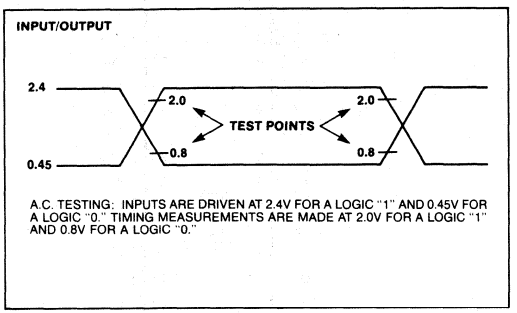

A.C. TESTING LOAD CIRCUIT

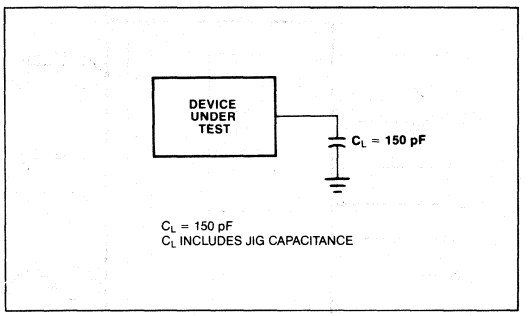

8155H/8156H/8155H-2/8156H-2
2048-BIT STATIC HMOS RAM WITH I/O PORTS AND TIMER

- **Single +5V Power Supply with 10% Voltage Margins**
- **30% Lower Power Consumption than the 8155 and 8156**
- **100% Compatible with 8155 and 8156**
- **256 Word x 8 Bits**
- **Completely Static Operation**
- **Internal Address Latch**
- **2 Programmable 8-Bit I/O Ports**
- **1 Programmable 6-Bit I/O Port**
- **Programmable 14-Bit Binary Counter/ Timer**
- **Compatible with 8085AH, 8085A and 8088 CPU**
- **Multiplexed Address and Data Bus**

The Intel® 8155H and 8156H are RAM and I/O chips implemented in N-Channel, depletion load, silicon gate technology (HMOS), to be used in the 8085AH and 8088 microprocessor systems. The RAM portion is designed with 2048 static cells organized as 256 x 8. They have a maximum access time of 400 ns to permit use with no wait states in 8085AH CPU.The 8155H-2 and 8156H-2 have maximum access times of 330 ns for use with the 8085AH-2 and the 5 MHz 8088 CPU.

The I/O portion consists of three general purpose I/O ports. One of the three ports can be programmed to be status pins, thus allowing the other two ports to operate in handshake mode.

A 14-bit programmable counter/timer is also included on chip to provide either a square wave or terminal count pulse for the CPU system depending on timer mode.

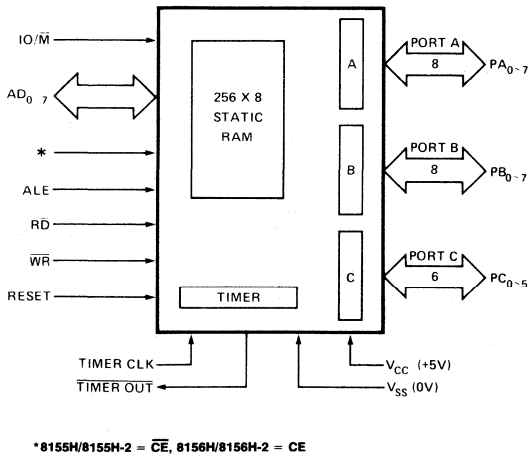

*8155H/8155H-2 = $\overline{CE}$, 8156H/8156H-2 = CE

Figure 1. Block Diagram

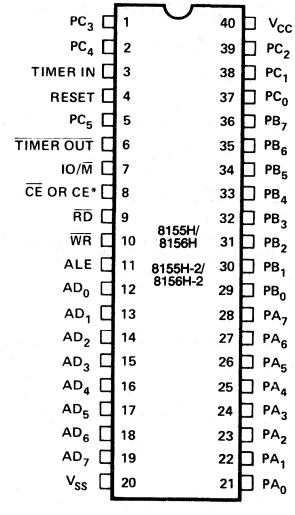

Figure 2. Pin Configuration

Intel Corporation Assumes No Responsibilty for the Use of Any Circuitry Other Than Circuitry Embodied in an Intel Product. No Other Circuit Patent Licenses are Implied.
© INTEL CORPORATION, 1981.

Table 1. Pin Description

Symbol	Type	Name and Function
RESET	I	**Reset:** Pulse provided by the 8085AH to initialize the system (connect to 8085AH RESET OUT). Input high on this line resets the chip and initializes the three I/O ports to input mode. The width of RESET pulse should typically be two 8085AH clock cycle times.
AD_{0-7}	I/O	**Address/Data:** 3-state Address/Data lines that interface with the CPU lower 8-bit Address/Data Bus. The 8-bit address is latched into the address latch inside the 8155H/56H on the falling edge of ALE. The address can be either for the memory section or the I/O section depending on the IO/$\overline{M}$ input. The 8-bit data is either written into the chip or read from the chip, depending on the $\overline{WR}$ or $\overline{RD}$ input signal.
CE or $\overline{CE}$	I	**Chip Enable:** On the 8155H, this pin is $\overline{CE}$ and is ACTIVE LOW. On the 8156H, this pin is CE and is ACTIVE HIGH.
$\overline{RD}$	I	**Read Control:** Input low on this line with the Chip Enable active enables and AD_{0-7} buffers. If IO/$\overline{M}$ pin is low, the RAM content will be read out to the AD bus. Otherwise the content of the selected I/O port or command/status registers will be read to the AD bus.
$\overline{WR}$	I	**Write Control:** Input low on this line with the Chip Enable active causes the data on the Address/Data bus to be written to the RAM or I/O ports and command/status register, depending on IO/$\overline{M}$.
ALE	I	**Address Latch Enable:** This control signal latches both the address on the AD_{0-7} lines and the state of the Chip Enable and IO/$\overline{M}$ into the chip at the falling edge of ALE.
IO/$\overline{M}$	I	**I/O Memory:** Selects memory if low and I/O and command/status registers if high.
PA_{0-7}(8)	I/O	**Port A:** These 8 pins are general purpose I/O pins. The in/out direction is selected by programming the command register.
PB_{0-7}(8)	I/O	**Port B:** These 8 pins are general purpose I/O pins. The in/out direction is selected by programming the command register.
PC_{0-5}(6)	I/O	**Port C:** These 6 pins can function as either input port, output port, or as control signals for PA and PB. Programming is done through the command register. When PC_{0-5} are used as control signals, they will provide the following: PC_0 — A INTR (Port A Interrupt) PC_1 — $\overline{ABF}$ (Port A Buffer Full) PC_2 — $\overline{A\ STB}$ (Port A Strobe) PC_3 — B INTR (Port B Interrupt) PC_4 — $\overline{B\ BF}$ (Port B Buffer Full) PC_5 — $\overline{B\ STB}$ (Port B Strobe)
TIMER IN	I	**Timer Input:** Input to the counter-timer.
$\overline{TIMER\ OUT}$	O	**Timer Output:** This output can be either a square wave or a pulse, depending on the timer mode.
V_{CC}		**Voltage:** +5 volt supply.
V_{SS}		**Ground:** Ground reference.

FUNCTIONAL DESCRIPTION

The 8155H/8156H contains the following:

- 2k Bit Static RAM organized as 256 x 8
- Two 8-bit I/O ports (PA & PB) and one 6-bit I/O port (PC)
- 14-bit timer-counter

The IO/$\overline{M}$ (IO/Memory Select) pin selects either the five registers (Command, Status, PA_{0-7}, PB_{0-7}, PC_{0-5}) or the memory (RAM) portion.

The 8-bit address on the Address/Data lines, Chip Enable input CE or $\overline{CE}$, and IO/$\overline{M}$ are all latched on-chip at the falling edge of ALE.

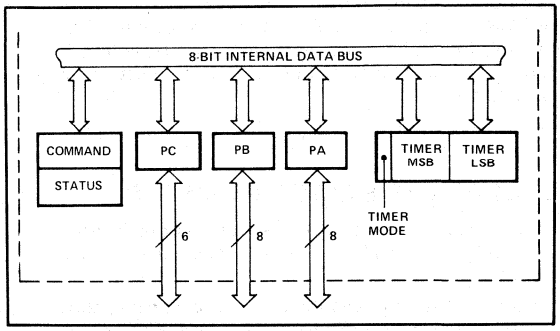

Figure 3. 8155H/8156H Internal Registers

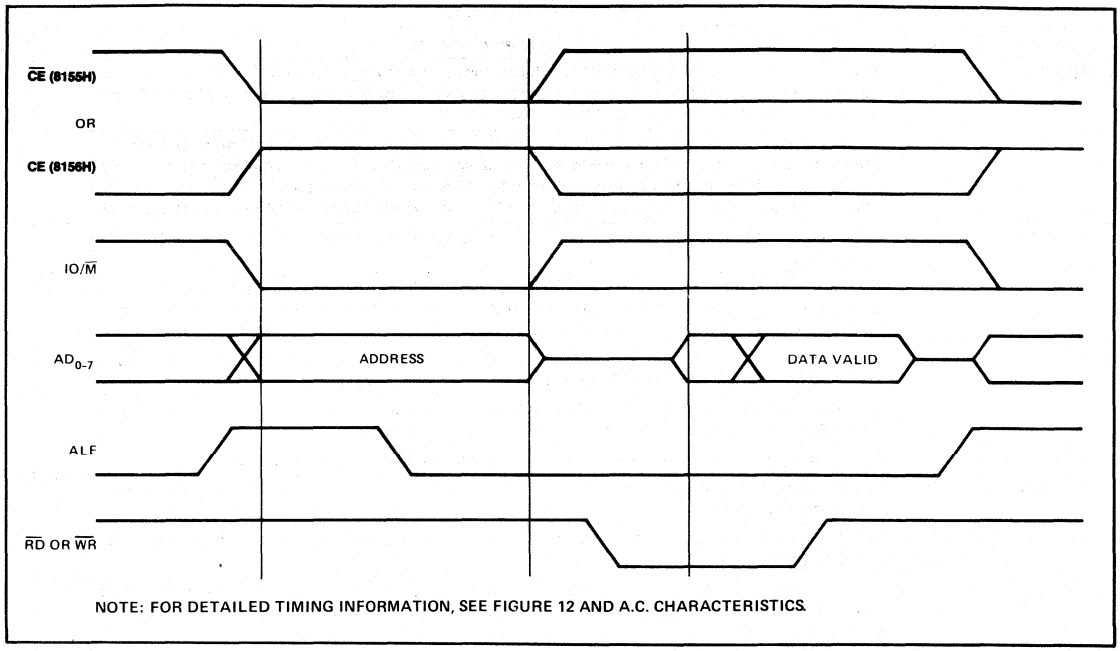

Figure 4. 8155H/8156H On-Board Memory Read/Write Cycle

PROGRAMMING OF THE COMMAND REGISTER

The command register consists of eight latches. Four bits (0-3) define the mode of the ports, two bits (4-5) enable or disable the interrupt from port C when it acts as control port, and the last two bits (6-7) are for the timer.

The command register contents can be altered at any time by using the I/O address XXXXX000 during a WRITE operation with the Chip Enable active and IO/$\overline{M}$ = 1. The meaning of each bit of the command byte is defined in Figure 5. The contents of the command register may never be read.

READING THE STATUS REGISTER

The status register consists of seven latches, one for each bit; six (0-5) for the status of the ports and one (6) for the status of the timer.

The status of the timer and the I/O section can be polled by reading the Status Register (Address XXXXX000). Status word format is shown in Figure 6. Note that you may never write to the status register since the command register shares the same I/O address and the command register is selected when a write to that address is issued.

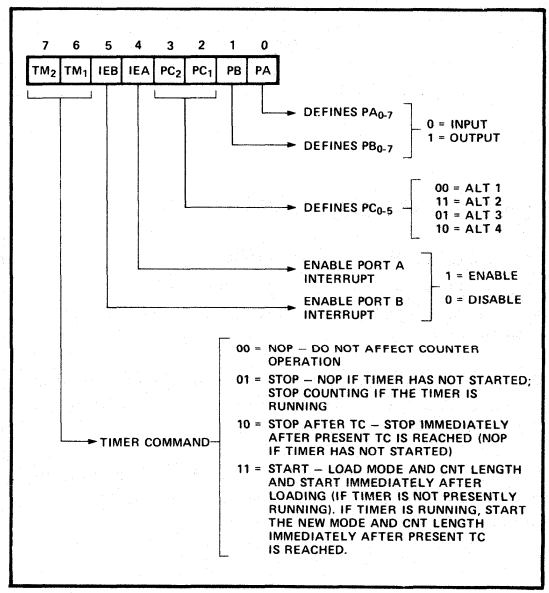

Figure 5. Command Register Bit Assignment

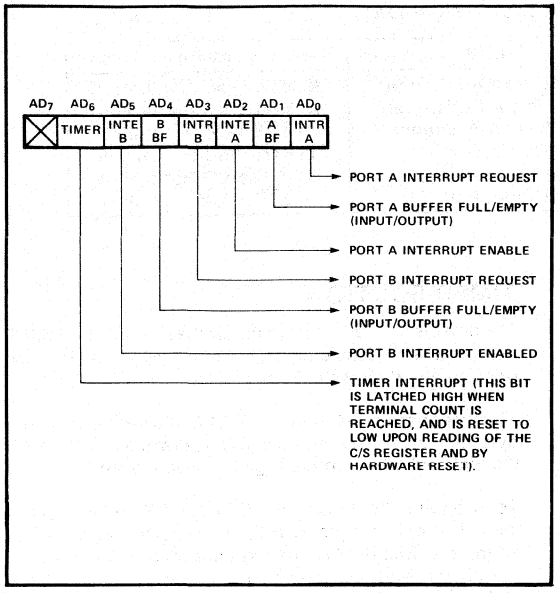

Figure 6. Status Register Bit Assignment

INPUT/OUTPUT SECTION

The I/O section of the 8155H/8156H consists of five registers: (See Figure 7.)

- **Command/Status Register (C/S)** — Both registers are assigned the address XXXXX000. The C/S address serves the dual purpose.

  When the C/S registers are selected during WRITE operation, a command is written into the command register. The contents of this register are *not* accessible through the pins.

  When the C/S (XXXXX000) is selected during a READ operation, the status information of the I/O ports and the timer becomes available on the AD_{0-7} lines.

- **PA Register** — This register can be programmed to be either input or output ports depending on the status of the contents of the C/S Register. Also depending on the command, this port can operate in either the basic mode or the strobed mode (See timing diagram). The I/O pins assigned in relation to this register are PA_{0-7}. The address of this register is XXXXX001.

- **PB Register** — This register functions the same as PA Register. The I/O pins assigned are PB_{0-7}. The address of this register is XXXXX010.

- **PC Register** — This register has the address XXXXX011 and contains only 6 bits. The 6 bits can be programmed to be either input ports, output ports or as control signals for PA and PB by properly programming the AD_2 and AD_3 bits of the C/S register.

  When PC_{0-5} is used as a control port, 3 bits are assigned for Port A and 3 for Port B. The first bit is an interrupt that the 8155H sends out. The second is an output signal indicating whether the buffer is full or empty, and the third is an input pin to accept a strobe for the strobed input mode. (See Table 2.)

When the 'C' port is programmed to either ALT3 or ALT4, the control signals for PA and PB are initialized as follows:

CONTROL	INPUT MODE	OUTPUT MODE
BF	Low	Low
INTR	Low	High
STB	Input Control	Input Control

I/O ADDRESS†								SELECTION
A7	A6	A5	A4	A3	A2	A1	A0	
X	X	X	X	X	0	0	0	Interval Command/Status Register
X	X	X	X	X	0	0	1	General Purpose I/O Port A
X	X	X	X	X	0	1	0	General Purpose I/O Port B
X	X	X	X	X	0	1	1	Port C — General Purpose I/O or Control
X	X	X	X	X	1	0	0	Low-Order 8 bits of Timer Count
X	X	X	X	X	1	0	1	High 6 bits of Timer Count and 2 bits of Timer Mode

X: Don't Care.

†: I/O Address must be qualified by CE = 1 (8156H) or $\overline{CE}$ = 0 (8155H) and IO/$\overline{M}$ = 1 in order to select the appropriate register.

Figure 7. I/O Port and Timer Addressing Scheme

Figure 8 shows how I/O PORTS A and B are structured within the 8155H and 8156H:

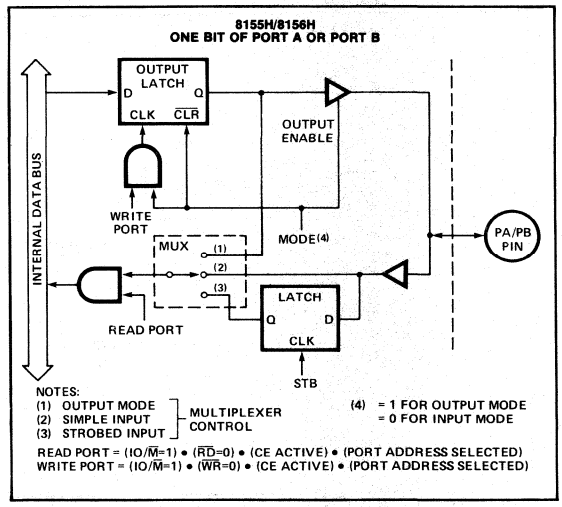

Figure 8. 8155H/8156H Port Functions

Table 2. Port Control Assignment

Pin	ALT 1	ALT 2	ALT 3	ALT 4
PC0	Input Port	Output Port	A INTR (Port A Interrupt)	A INTR (Port A Interrupt)
PC1	Input Port	Output Port	A BF (Port A Buffer Full)	A BF (Port A Buffer Full)
PC2	Input Port	Output Port	A $\overline{STB}$ (Port A Strobe)	A $\overline{STB}$ (Port A Strobe)
PC3	Input Port	Output Port	Output Port	B INTR (Port B Interrupt)
PC4	Input Port	Output Port	Output Port	B BF (Port B Buffer Full)
PC5	Input Port	Output Port	Output Port	B $\overline{STB}$ (Port B Strobe)

Note in the diagram that when the I/O ports are programmed to be output ports, the contents of the output ports can still be read by a READ operation when appropriately addressed.

The outputs of the 8155H/8156H are "glitch-free" meaning that you can write a "1" to a bit position that was previously "1" and the level at the output pin will not change.

Note also that the output latch is cleared when the port enters the input mode. The output latch cannot be loaded by writing to the port if the port is in the input mode. The result is that each time a port mode is changed from input to output, **the output pins will go low. When the 8155H/56H is RESET, the output latches are all cleared and all 3 ports enter the input mode.**

When in the ALT 1 or ALT 2 modes, the bits of PORT C are structured like the diagram above in the simple input or output mode, respectively.

Reading from an input port with nothing connected to the pins will provide unpredictable results.

Figure 9 shows how the 8155H/8156H I/O ports might be configured in a typical MCS-85 system.

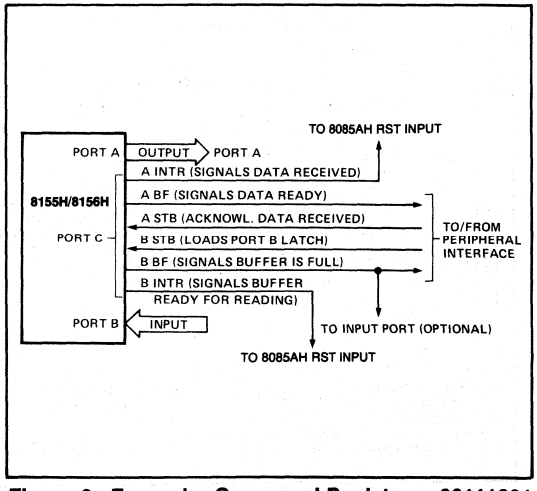

Figure 9. Example: Command Register = 00111001

TIMER SECTION

The timer is a 14-bit down-counter that counts the TIMER IN pulses and provides either a square wave or pulse when terminal count (TC) is reached.

The timer has the I/O address XXXXX100 for the low order byte of the register and the I/O address XXXXX101 for the high order byte of the register. (See Figure 7.)

To program the timer, the COUNT LENGTH REG is loaded first, one byte at a time, by selecting the timer addresses. Bits 0-13 of the high order count register will specify the length of the next count and bits 14-15 of the high order register will specify the timer output mode (see Figure 10). The value loaded into the count length register can have any value from 2H through 3FFH in Bits 0–13.

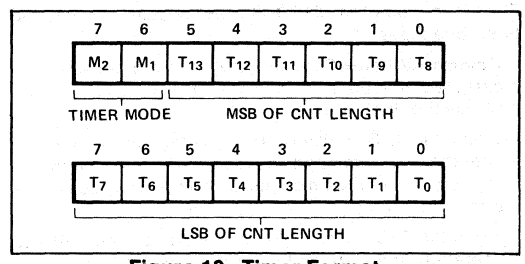

Figure 10. Timer Format

There are four modes to choose from: M2 and M1 define the timer mode, as shown in Figure 11.

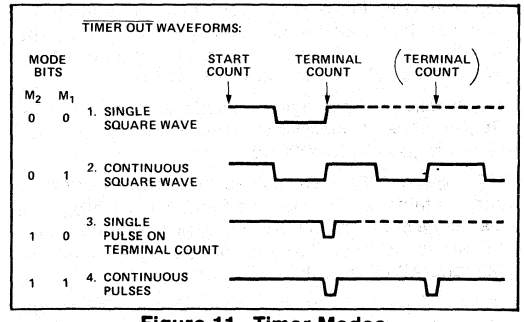

Figure 11. Timer Modes

Bits 6-7 (TM_2 and TM_1) of command register contents are used to start and stop the counter. There are four commands to choose from:

TM_2	TM_1	
0	0	NOP — Do not affect counter operation.
0	1	STOP — NOP if timer has not started; stop counting if the timer is running.
1	0	STOP AFTER TC — Stop immediately after present TC is reached (NOP if timer has not started)
1	1	START — Load mode and CNT length and start immediately after loading (if timer is not presently running). If timer is running, start the new mode and CNT length immediately after present TC is reached.

Note that while the counter is counting, you may load a new count and mode into the count length registers. Before the new count and mode will be used by the counter, you must issue a START command to the counter. This applies even though you may only want to change the count and use the previous mode.

In case of an odd-numbered count, the first half-cycle of the squarewave output, which is high, is one count longer than the second (low) half-cycle, as shown in Figure 12.

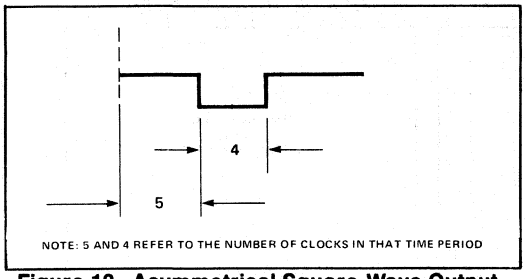

Figure 12. Asymmetrical Square-Wave Output Resulting from Count of 9

The counter in the 8155H is not initialized to any particular mode or count when hardware RESET occurs, but RESET does *stop* the counting. Therefore, counting cannot begin following RESET until a START command is issued via the C/S register.

Please note that the timer circuit on the 8155H/8156H chip is designed to be a square-wave timer, not an event counter. To achieve this, it counts down by twos twice in completing one cycle. Thus, its registers do not contain values directly representing the number of TIMER IN pulses received. You cannot load an initial value of 1 into the count register and cause the timer to operate, as its terminal count value is 10 (binary) or 2 (decimal). (For the detection of single pulses, it is suggested that one **of the hardware interrupt pins on the 8085AH be used.)** After the timer has started counting down, the values residing in the count registers can be used to calculate the actual number of TIMER IN pulses required to complete the timer cycle if desired. To obtain the remaining count, perform the following operations in order:

1. Stop the count
2. Read in the 16-bit value from the count length registers
3. Reset the upper two mode bits
4. Reset the carry and rotate right one position all 16 bits through carry
5. If carry is set, add 1/2 of the full original count (1/2 full count — 1 if full count is odd).

Note: If you started with an odd count and you read the count length register before the third count pulse occurs, you will not be able to discern whether one or two counts has occurred. Regardless of this, the 8155H/56H always counts out the right number of pulses in generating the $\overline{\text{TIMER OUT}}$ waveforms.

8085A MINIMUM SYSTEM CONFIGURATION

Figure 13a shows a minimum system using three chips, containing:

- 256 Bytes RAM
- 2K Bytes ROM
- 38 I/O Pins
- 1 Interval Timer
- 4 Interrupt Levels

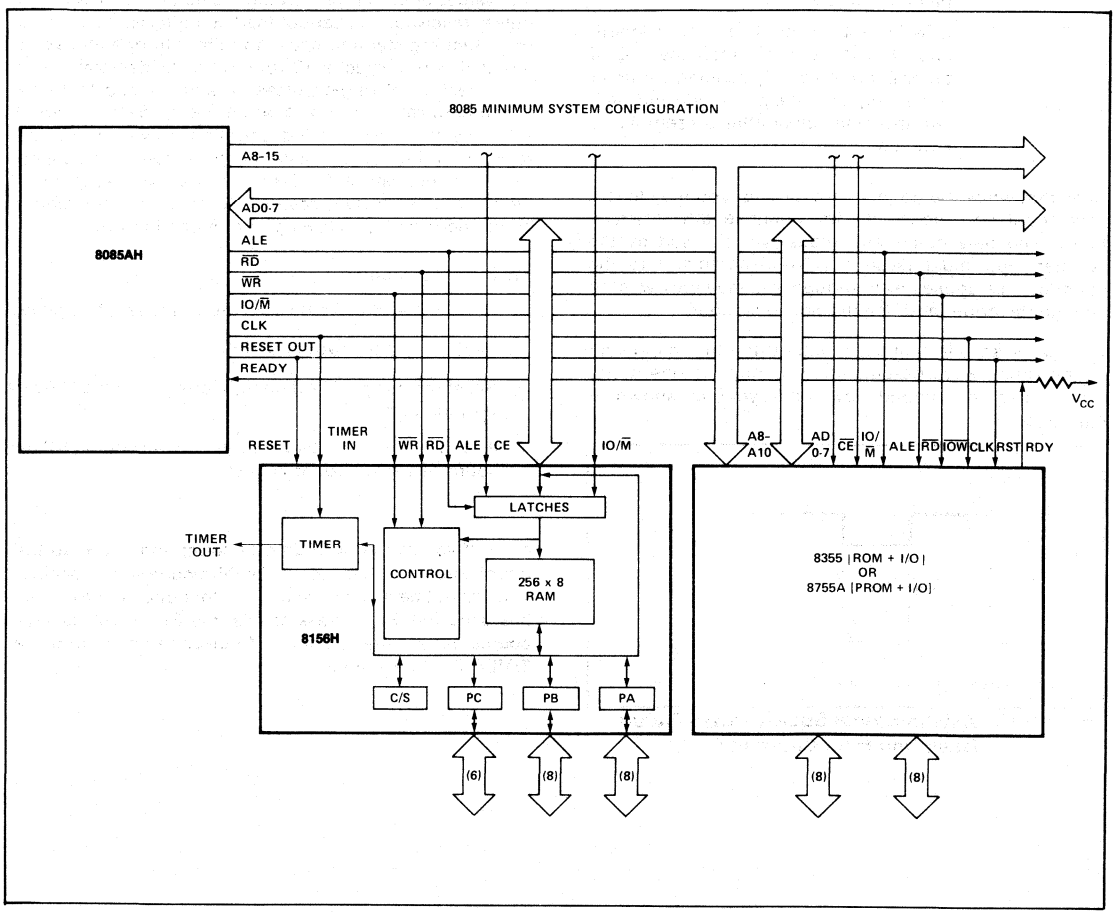

Figure 13a. 8085AH Minimum System Configuration (Memory Mapped I/O)

8088 FIVE CHIP SYSTEM

Figure 13b shows a five chip system containing:

- 1.25K Bytes RAM
- 2K Bytes ROM
- 38 I/O Pins
- 1 Interval Timer
- 2 Interrupt Levels

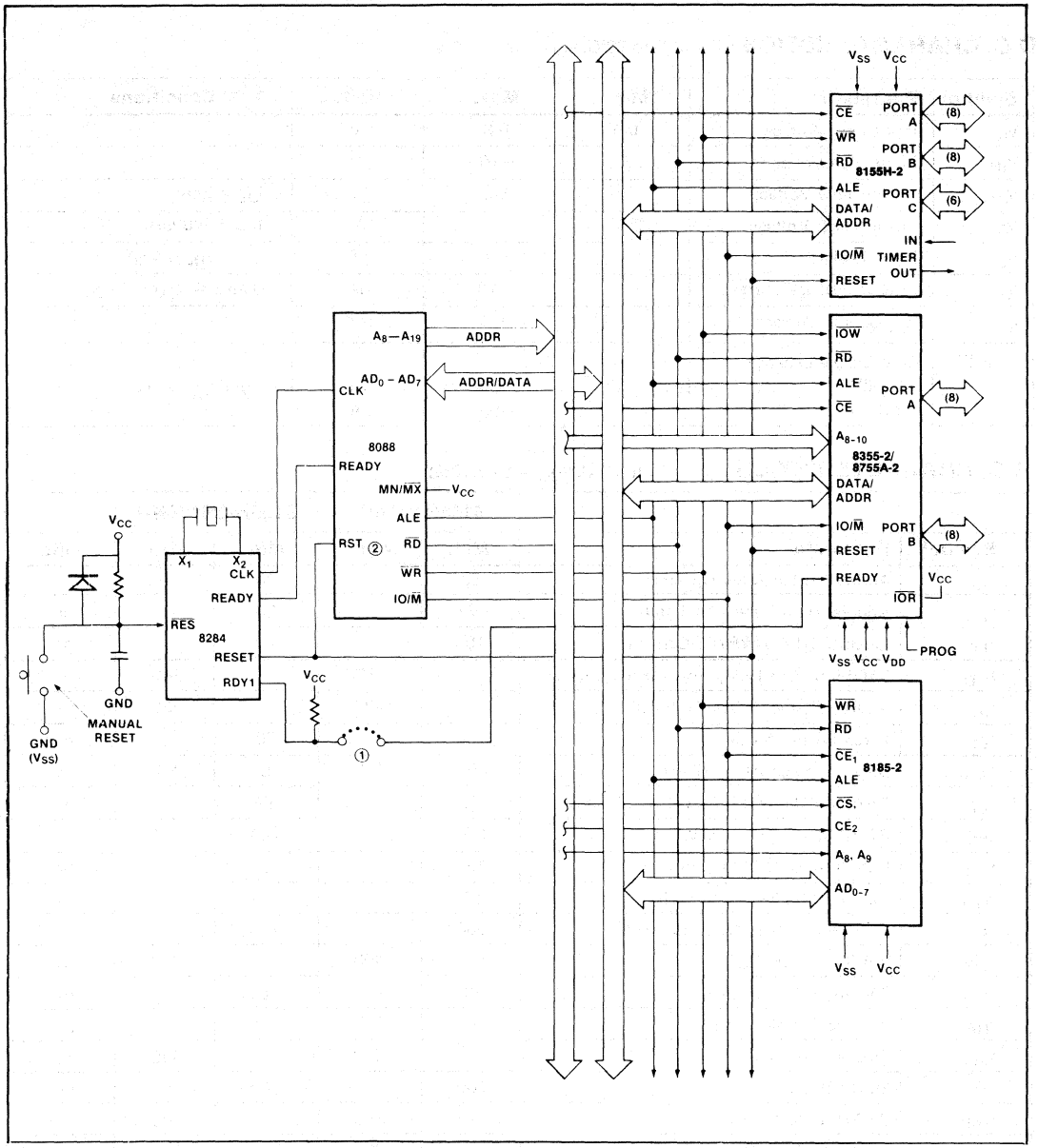

Figure 13b. 8088 Five Chip System Configuration

ABSOLUTE MAXIMUM RATINGS*

Temperature Under Bias ..... 0°C to +70°C
Storage Temperature ..... -65°C to +150°C
Voltage on Any Pin
With Respect to Ground ..... -0.5V to +7V
Power Dissipation 1.5W

NOTICE: Stresses above those listed under "Absolute Maximum Ratings" may cause permanent damage to the device. This is a stress rating only and functional operation of the device at these or any other conditions above those indicated in the operational sections of this specification is not implied. Exposure to absolute maximum rating conditions for extended periods may affect device reliability.

D.C. CHARACTERISTICS (T_A = 0°C to 70°C, V_{CC} = 5V ± 10%)

Symbol	Parameter	Min.	Max.	Units	Test Conditions
V_{IL}	Input Low Voltage	-0.5	0.8	V	
V_{IH}	Input High Voltage	2.0	V_{CC}+0.5	V	
V_{OL}	Output Low Voltage		0.45	V	I_{OL} = 2mA
V_{OH}	Output High Voltage	2.4		V	I_{OH} = -400μA
I_{IL}	Input Leakage		±10	μA	$0V \leq V_{IN} \leq V_{CC}$
I_{LO}	Output Leakage Current		± 10	μA	$0.45V \leq V_{OUT} \leq V_{CC}$
I_{CC}	V_{CC} Supply Current		125	mA	
I_{IL}(CE)	Chip Enable Leakage 8155H 8156H		 +100 -100	 μA μA	$0V \leq V_{IN} \leq V_{CC}$

A.C. CHARACTERISTICS (T_A = 0°C to 70°C, V_{CC} = 5V ±10%)

		8155H/8156H		8155H-2/8156H-2		
Symbol	Parameter	Min.	Max.	Min.	Max.	Units
t_{AL}	Address to Latch Set Up Time	50		30		ns
t_{LA}	Address Hold Time after Latch	80		30		ns
t_{LC}	Latch to READ/WRITE Control	100		40		ns
t_{RD}	Valid Data Out Delay from READ Control		170		140	ns
t_{AD}	Address Stable to Data Out Valid		400		330	ns
t_{LL}	Latch Enable Width	100		70		ns
t_{RDF}	Data Bus Float After READ	0	100	0	80	ns
t_{CL}	READ/WRITE Control to Latch Enable	20		10		ns
t_{CC}	READ/WRITE Control Width	250		200		ns
t_{DW}	Data In to WRITE Set Up Time	150		100		ns
t_{WD}	Data In Hold Time After WRITE	25		25		ns
t_{RV}	Recovery Time Between Controls	300		200		ns
t_{WP}	WRITE to Port Output		400		300	ns
t_{PR}	Port Input Setup Time	70		50		ns
t_{RP}	Port Input Hold Time	50		10		ns
t_{SBF}	Strobe to Buffer Full		400		300	ns
t_{SS}	Strobe Width	200		150		ns
t_{RBE}	READ to Buffer Empty		400		300	ns
t_{SI}	Strobe to INTR On		400		300	ns

A.C. CHARACTERISTICS (Continued) (T_A = 0°C to 70°C, V_{CC} = 5V ±10%)

		8155H/8156H		8155H-2/8156H-2		
Symbol	**Parameter**	**Min.**	**Max.**	**Min.**	**Max.**	**Units**
t_{RDI}	READ to INTR Off		400		300	ns
t_{PSS}	Port Setup Time to Strobe Strobe	50		0		ns
t_{PHS}	Port Hold Time After Strobe	120		100		ns
t_{SBE}	Strobe to Buffer Empty		400		300	ns
t_{WBF}	WRITE to Buffer Full		400		300	ns
t_{WI}	WRITE to INTR Off		400		300	ns
t_{TL}	TIMER-IN to $\overline{\text{TIMER-OUT}}$ Low		400		300	ns
t_{TH}	TIMER-IN to $\overline{\text{TIMER-OUT}}$ High		400		300	ns
t_{RDE}	Data Bus Enable from READ Control	10		10		ns
t_1	TIMER-IN Low Time	80		40		ns
t_2	TIMER-IN High Time	120		70		ns

A.C. TESTING INPUT, OUTPUT WAVEFORM

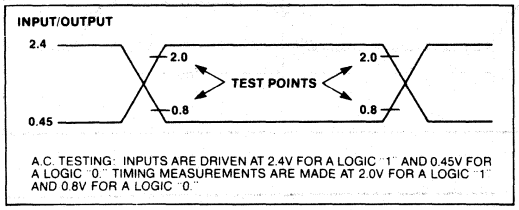

A.C. TESTING: INPUTS ARE DRIVEN AT 2.4V FOR A LOGIC "1" AND 0.45V FOR A LOGIC "0." TIMING MEASUREMENTS ARE MADE AT 2.0V FOR A LOGIC "1" AND 0.8V FOR A LOGIC "0."

A.C. TESTING LOAD CIRCUIT

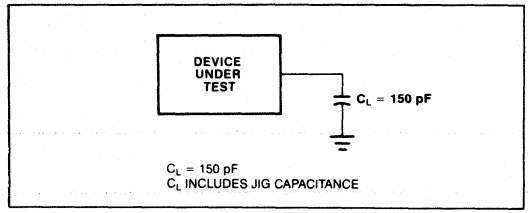

C_L = 150 pF
C_L INCLUDES JIG CAPACITANCE

WAVEFORMS

READ

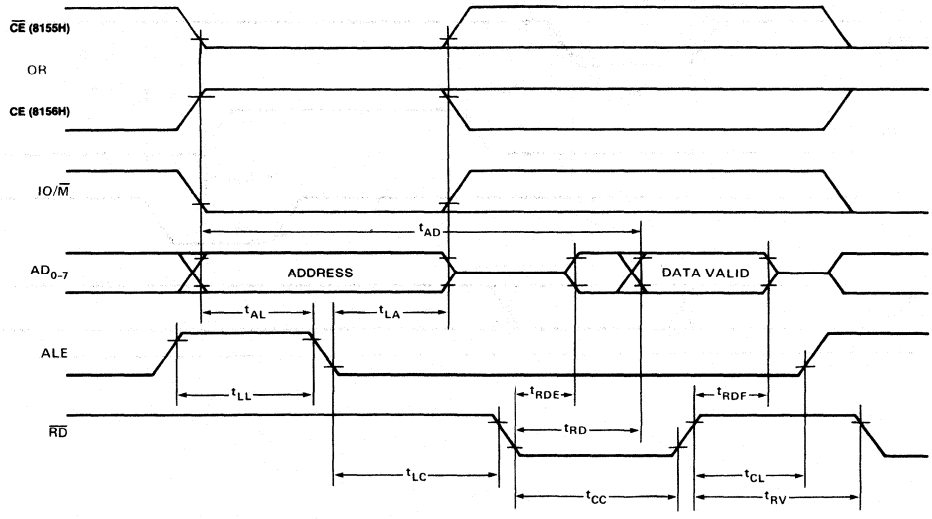

WAVEFORMS (Continued)

WRITE

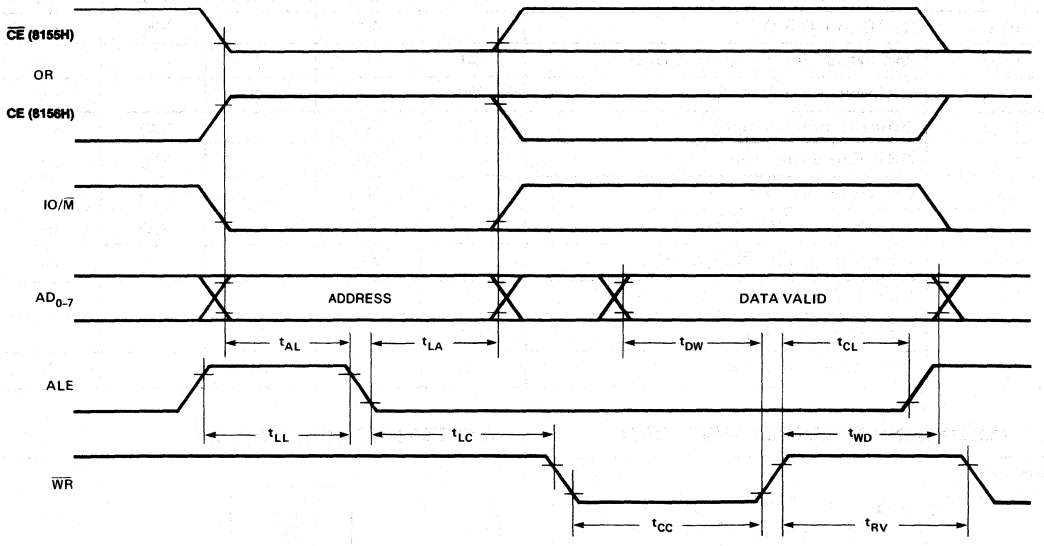

STROBED INPUT

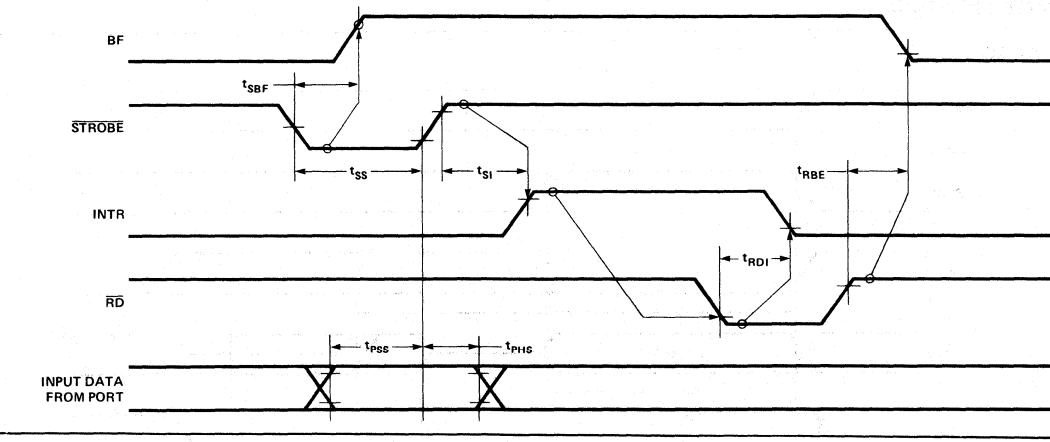

WAVEFORMS (Continued)

STROBED OUTPUT

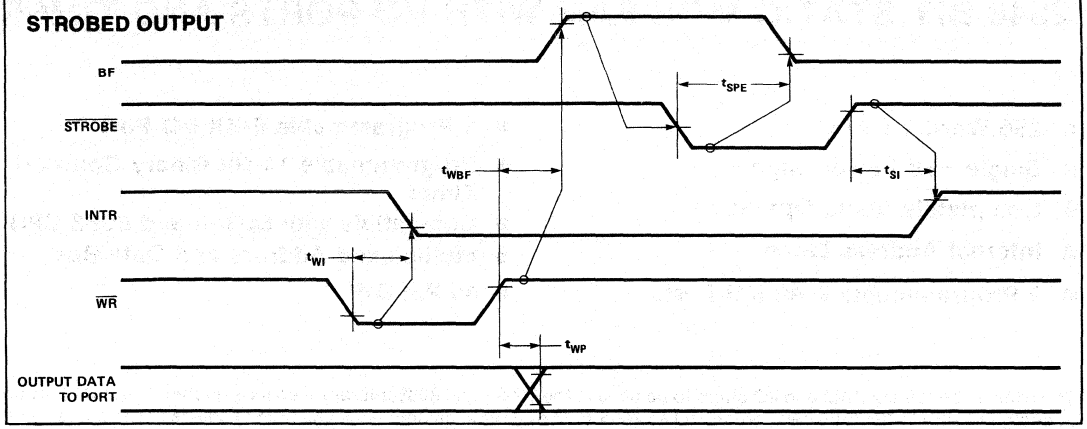

BASIC INPUT

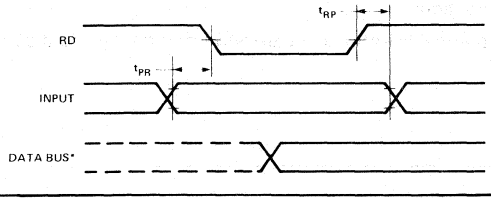

BASIC OUTPUT

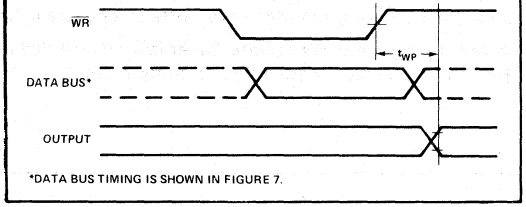

*DATA BUS TIMING IS SHOWN IN FIGURE 7.

TIMER OUTPUT COUNTDOWN FROM 5 TO 1

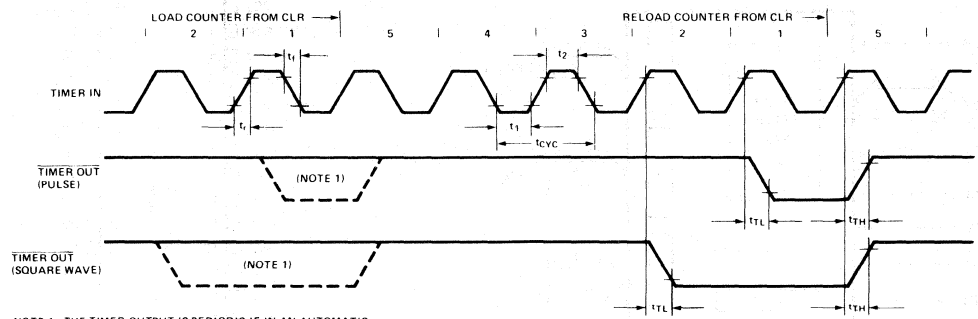

NOTE 1: THE TIMER OUTPUT IS PERIODIC IF IN AN AUTOMATIC RELOAD MODE (M_1 MODE BIT = 1)

8155/8156/8155-2/8156-2
2048 BIT STATIC MOS RAM WITH I/O PORTS AND TIMER

- 256 Word x 8 Bits
- Single +5V Power Supply
- Completely Static Operation
- Internal Address Latch
- 2 Programmable 8 Bit I/O Ports
- 1 Programmable 6-Bit I/O Port
- Programmable 14-Bit Binary Counter/Timer
- Compatible with 8085A and 8088 CPU
- Multiplexed Address and Data Bus
- 40 Pin DIP

The 8155 and 8156 are RAM and I/O chips to be used in the 8085A and 8088 microprocessor systems. The RAM portion is designed with 2048 static cells organized as 256 x 8. They have a maximum access time of 400 ns to permit use with no wait states in 8085A CPU. The 8155-2 and 8156-2 have maximum access times of 330 ns for use with the 8085A-2 and the 5 MHz 8088 CPU.

The I/O portion consists of three general purpose I/O ports. One of the three ports can be programmed to be status pins, thus allowing the other two ports to operate in handshake mode.

A 14-bit programmable counter/timer is also included on chip to provide either a square wave or terminal count pulse for the CPU system depending on timer mode.

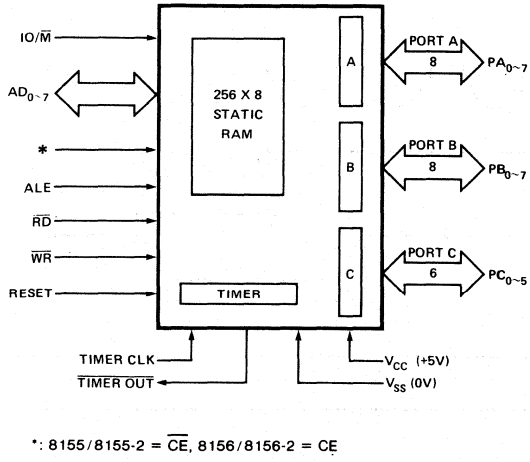

*: 8155/8155-2 = $\overline{CE}$, 8156/8156-2 = CE

Figure 1. Block Diagram

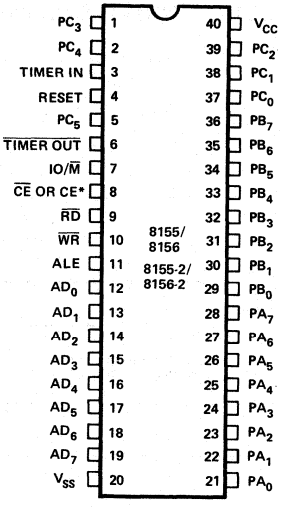

Figure 2. Pin Configuration

ABSOLUTE MAXIMUM RATINGS*

Temperature Under Bias ..... 0°C to +70°C
Storage Temperature ..... -65°C to +150°C
Voltage on Any Pin
With Respect to Ground ..... -0.5V to +7V
Power Dissipation 1.5W

**NOTICE: Stresses above those listed under "Absolute Maximum Ratings" may cause permanent damage to the device. This is a stress rating only and functional operation of the device at these or any other conditions above those indicated in the operational sections of this specification is not implied. Exposure to absolute maximum rating conditions for extended periods may affect device reliability.*

D.C. CHARACTERISTICS (T_A = 0°C to 70°C; V_{CC} = 5V ± 5%)

SYMBOL	PARAMETER	MIN.	MAX.	UNITS	TEST CONDITIONS
V_{IL}	Input Low Voltage	-0.5	0.8	V	
V_{IH}	Input High Voltage	2.0	V_{CC}+0.5	V	
V_{OL}	Output Low Voltage		0.45	V	I_{OL} = 2mA
V_{OH}	Output High Voltage	2.4		V	I_{OH} = -400μA
I_{IL}	Input Leakage		±10	μA	$0V \leq V_{IN} \leq V_{CC}$
I_{LO}	Output Leakage Current		± 10	μA	$0.45V \leq V_{OUT} \leq V_{CC}$
I_{CC}	V_{CC} Supply Current		180	mA	
I_{IL}(CE)	Chip Enable Leakage 8155 8156		 +100 -100	 μA μA	$0V \leq V_{IN} \leq V_{CC}$

A.C. CHARACTERISTICS (T_A = 0°C to 70°C; V_{CC} = 5V ± 5%)

		8155/8156		8155-2/8156-2		
SYMBOL	PARAMETER	MIN.	MAX.	MIN.	MAX.	UNITS
t_{AL}	Address to Latch Set Up Time	50		30		ns
t_{LA}	Address Hold Time after Latch	80		30		ns
t_{LC}	Latch to READ/WRITE Control	100		40		ns
t_{RD}	Valid Data Out Delay from READ Control		170		140	ns
t_{AD}	Address Stable to Data Out Valid		400		330	ns
t_{LL}	Latch Enable Width	100		70		ns
t_{RDF}	Data Bus Float After READ	0	100	0	80	ns
t_{CL}	READ/WRITE Control to Latch Enable	20		10		ns
t_{CC}	READ/WRITE Control Width	250		200		ns
t_{DW}	Data In to WRITE Set Up Time	150		100		ns
t_{WD}	Data In Hold Time After WRITE	25		25		ns
t_{RV}	Recovery Time Between Controls	300		200		ns
t_{WP}	WRITE to Port Output		400		300	ns
t_{PR}	Port Input Setup Time	70		50		ns
t_{RP}	Port Input Hold Time	50		10		ns
t_{SBF}	Strobe to Buffer Full		400		300	ns
t_{SS}	Strobe Width	200		150		ns
t_{RBE}	READ to Buffer Empty		400		300	ns
t_{SI}	Strobe to INTR On		400		300	ns
t_{RDI}	READ to INTR Off		400		300	ns
t_{PSS}	Port Setup Time to Strobe Strobe	50		0		ns
t_{PHS}	Port Hold Time After Strobe	120		100		ns
t_{SBE}	Strobe to Buffer Empty		400		300	ns
t_{WBF}	WRITE to Buffer Full		400		300	ns
t_{WI}	WRITE to INTR Off		400		300	ns
t_{TL}	TIMER-IN to $\overline{\text{TIMER-OUT}}$ Low		400		300	ns
t_{TH}	TIMER-IN to $\overline{\text{TIMER-OUT}}$ High		400		300	ns
t_{RDE}	Data Bus Enable from READ Control	10		10		ns
t_1	TIMER-IN Low Time	80		40		ns
t_2	TIMER-IN High Time	120		70		ns

A.C. TESTING INPUT, OUTPUT WAVEFORM

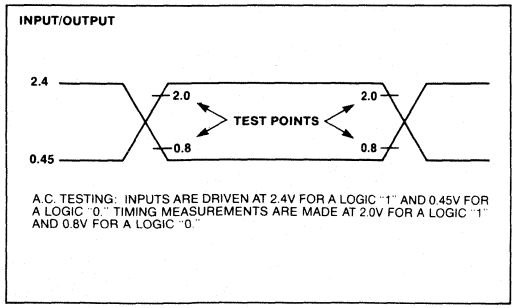

A.C. TESTING LOAD CIRCUIT

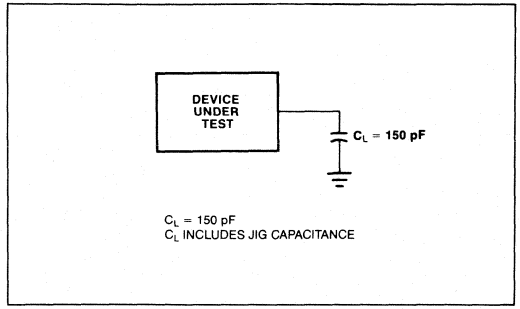

8185/8185-2
1024 x 8-BIT STATIC RAM FOR MCS-85®

- **Multiplexed Address and Data Bus**
- **Directly Compatible with 8085A and iAPX 88 Microprocessors**
- **Low Operating Power Dissipation**
- **Low Standby Power Dissipation**
- **Single +5V Supply**
- **High Density 18-Pin Package**

The Intel® 8185 is an 8192-bit static random access memory (RAM) organized as 1024 words by 8-bits using N-channel Silicon-Gate MOS technology. The multiplexed address and data bus allows the 8185 to interface directly to the 8085A and iAPX 88 microprocessors to provide a maximum level of system integration.

The low standby power dissipation minimizes system power requirements when the 8185 is disabled.

The 8185-2 is a high-speed selected version of the 8185 that is compatible with the 5 MHz 8085A-2 and the 5 MHz iAPX 88.

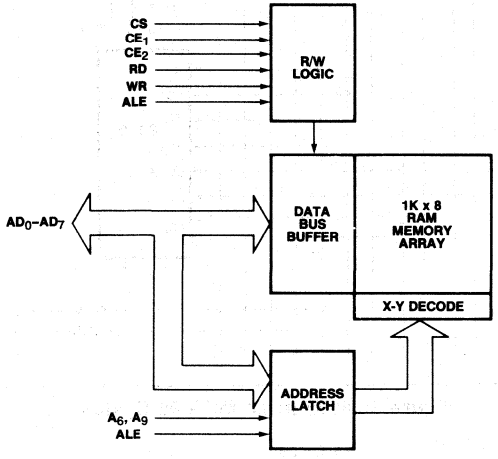

Figure 1. Block Diagram

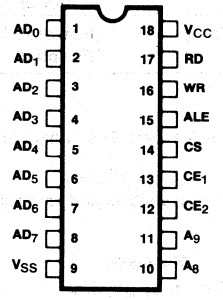

AD_0–AD_7	ADDRESS/DATA LINES
A_8, A_9	ADDRESS LINES
CS	CHIP SELECT
CE_1	CHIP ENABLE (IO/M)
CE_2	CHIP ENABLE
ALE	ADDRESS LATCH ENABLE
WR	WRITE ENABLE

Figure 2. Pin Configuration

Intel Corporation Assumes No Responsibilty for the Use of Any Circuitry Other Than Circuitry Embodied in an Intel Product. No Other Circuit Patent Licenses are Implied.
©INTEL CORPORATION, 1980

FUNCTIONAL DESCRIPTION

The 8185 has been designed to provide for direct interface to the multiplexed bus structure and bus timing of the 8085A microprocessor.

At the beginning of an 8185 memory access cycle, the 8-bit address on AD_{0-7}, A_8 and A_9, and the status of $\overline{CE}_1$ and CE_2 are all latched internally in the 8185 by the falling edge of ALE. If the latched status of both $\overline{CE}_1$ and CE_2 are active, the 8185 powers itself up, but no action occurs until the $\overline{CS}$ line goes low and the appropriate $\overline{RD}$ or $\overline{WR}$ control signal input is activated.

The $\overline{CS}$ input is not latched by the 8185 in order to allow the maximum amount of time for address decoding in selecting the 8185 chip. Maximum power consumption savings will occur, however, only when $\overline{CE}_1$ and CE_2 are activated selectively to power down the 8185 when it is not in use. A possible connection would be to wire the 8085A's IO/$\overline{M}$ line to the 8185's $\overline{CE}_1$ input, thereby keeping the 8185 powered down during I/O and interrupt cycles.

Table 1.
Truth Table for
Power Down and Function Enable

$\overline{CE}_1$	CE_2	$\overline{CS}$	(CS*)[2]	8185 Status
1	X	X	0	Power Down and Function Disable[1]
X	0	X	0	Power Down and Function Disable[1]
0	1	1	0	Powered Up and Function Disable[1]
0	1	0	1	Powered Up and Enabled

NOTES:
X: Don't Care.
1: Function Disable implies Data Bus in high impedance state and not writing.
2: CS* = $(\overline{CE}_1 = 0) \cdot (CE_2 = 1) \cdot (\overline{CS} = 0)$
CS* = 1 signifies all chip enables and chip select active

Table 2.
Truth Table for
Control and Data Bus Pin Status

(CS*)	$\overline{RD}$	$\overline{WR}$	AD_{0-7} During Data Portion of Cycle	8185 Function
0	X	X	Hi-Impedance	No Function
1	0	1	Data from Memory	Read
1	1	0	Data to Memory	Write
1	1	1	Hi-Impedance	Reading, but not Driving Data Bus

NOTE:
X: Don't Care.

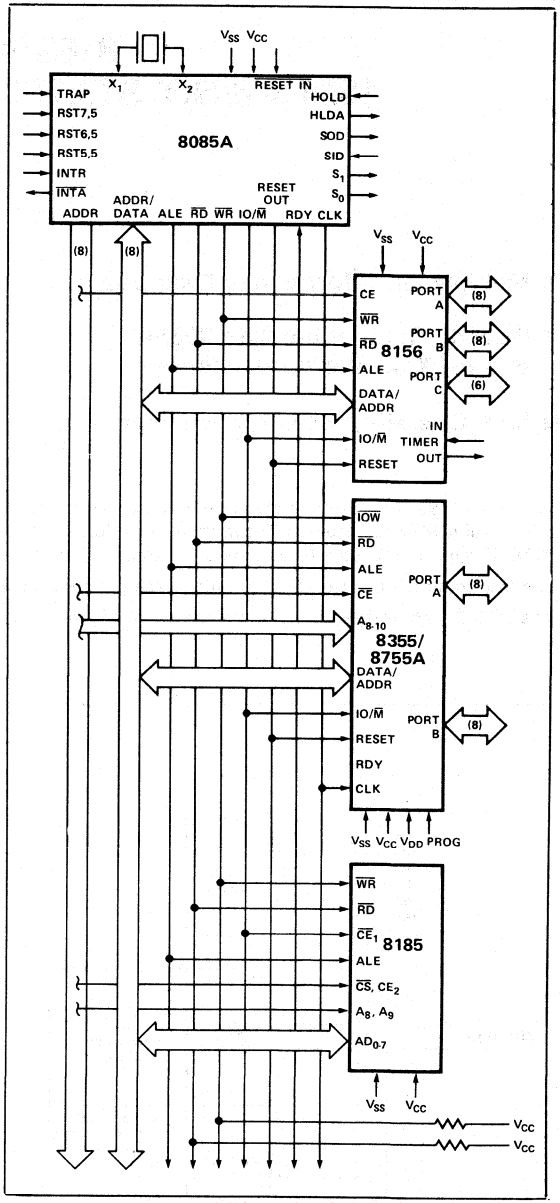

Figure 3. 8185 in an MCS-85 System

4 Chips:
2K Bytes ROM
1.25K Bytes RAM
38 I/O Lines
1 Counter/Timer
2 Serial I/O Lines
5 Interrupt Inputs

iAPX 88 FIVE CHIP SYSTEM:

- 1.25 K Bytes RAM
- 2 K Bytes ROM
- 38 I/O Pins
- 1 Internal Timer
- 2 Interrupt Levels

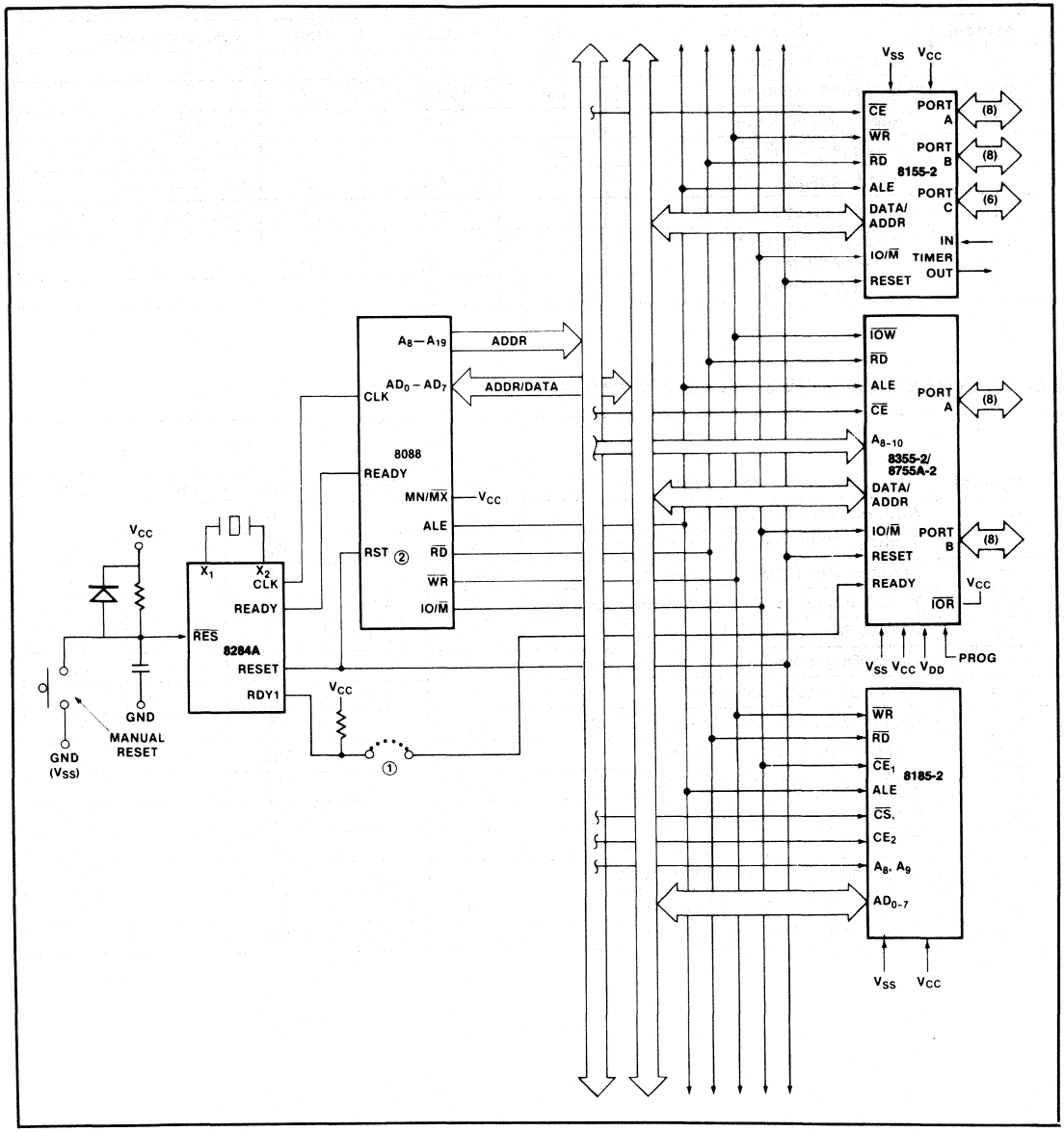

Figure 4. iAPX 88 Five Chip System Configuration

ABSOLUTE MAXIMUM RATINGS*

Temperature Under Bias ..... 0°C to +70°C
Storage Temperature ..... -65°C to +150°C
Voltage on Any Pin
with Respect to Ground ..... -0.5V to +7V
Power Dissipation 1.5W

**NOTICE: Stresses above those listed under "Absolute Maximum Ratings" may cause permanent damage to the device. This is a stress rating only and functional operation of the device at these or any other conditions above those indicated in the operational sections of this specification is not implied. Exposure to absolute maximum rating conditions for extended periods may affect device reliability.*

D.C. CHARACTERISTICS (T_A = 0°C to 70°C, V_{CC} = 5V ± 5%)

Symbol	Parameter	Min.	Max.	Units	Test Conditions
V_{IL}	Input Low Voltage	-0.5	0.8	V	
V_{IH}	Input High Voltage	2.0	V_{CC}+0.5	V	
V_{OL}	Output Low Voltage		0.45	V	I_{OL} = 2mA
V_{OH}	Output High Voltage	2.4			I_{OH} = – 400μA
I_{IL}	Input Leakage		±10	μA	0V ≤V_{IN} ≤V_{CC}
I_{LO}	Output Leakage Current		±10	μA	0.45V ≤ V_{OUT} ≤ V_{CC}
I_{CC}	V_{CC} Supply Current Powered Up		100	mA	
	Powered Down		35	mA	

A.C. CHARACTERISTICS (T_A = 0°C to 70°C, V_{CC} = 5V ± 5%)

		8185		8185-2		
Symbol	Parameter	Min.	Max.	Min.	Max.	Units
t_{AL}	Address to Latch Set Up Time	50		30		ns
t_{LA}	Address Hold Time After Latch	80		30		ns
t_{LC}	Latch to READ/WRITE Control	100		40		ns
t_{RD}	Valid Data Out Delay from READ Control		170		140	ns
t_{LD}	ALE to Data Out Valid		300		200	ns
t_{LL}	Latch Enable Width	100		70		ns
t_{RDF}	Data Bus Float After READ	0	100	0	80	ns
t_{CL}	READ/WRITE Control to Latch Enable	20		10		ns
t_{CC}	READ/WRITE Control Width	250		200		ns
t_{DW}	Data In to WRITE Set Up Time	150		150		ns
t_{WD}	Data In Hold Time After WRITE	20		20		ns
t_{SC}	Chip Select Set Up to Control Line	10		10		ns
t_{CS}	Chip Select Hold Time After Control	10		10		ns
t_{ALCE}	Chip Enable Set Up to ALE Falling	30		10		ns
t_{LACE}	Chip Enable Hold Time After ALE	50		30		ns

A.C. TESTING INPUT, OUTPUT WAVEFORM

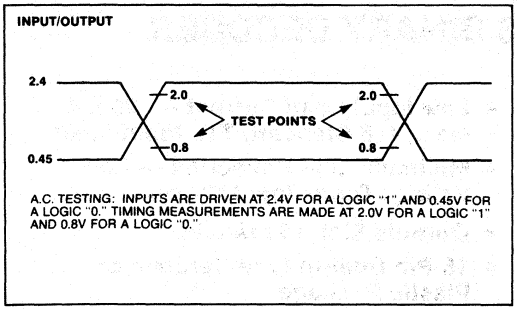

A.C. TESTING: INPUTS ARE DRIVEN AT 2.4V FOR A LOGIC "1" AND 0.45V FOR A LOGIC "0." TIMING MEASUREMENTS ARE MADE AT 2.0V FOR A LOGIC "1" AND 0.8V FOR A LOGIC "0."

A.C. TESTING LOAD CIRCUIT

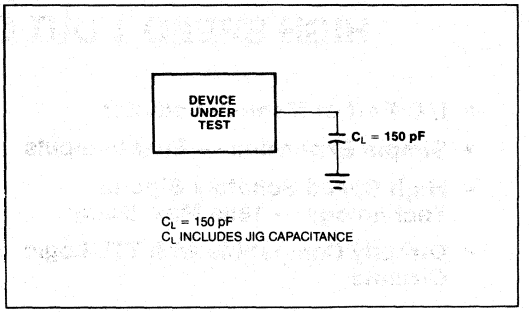

C_L = 150 pF
C_L INCLUDES JIG CAPACITANCE

WAVEFORM

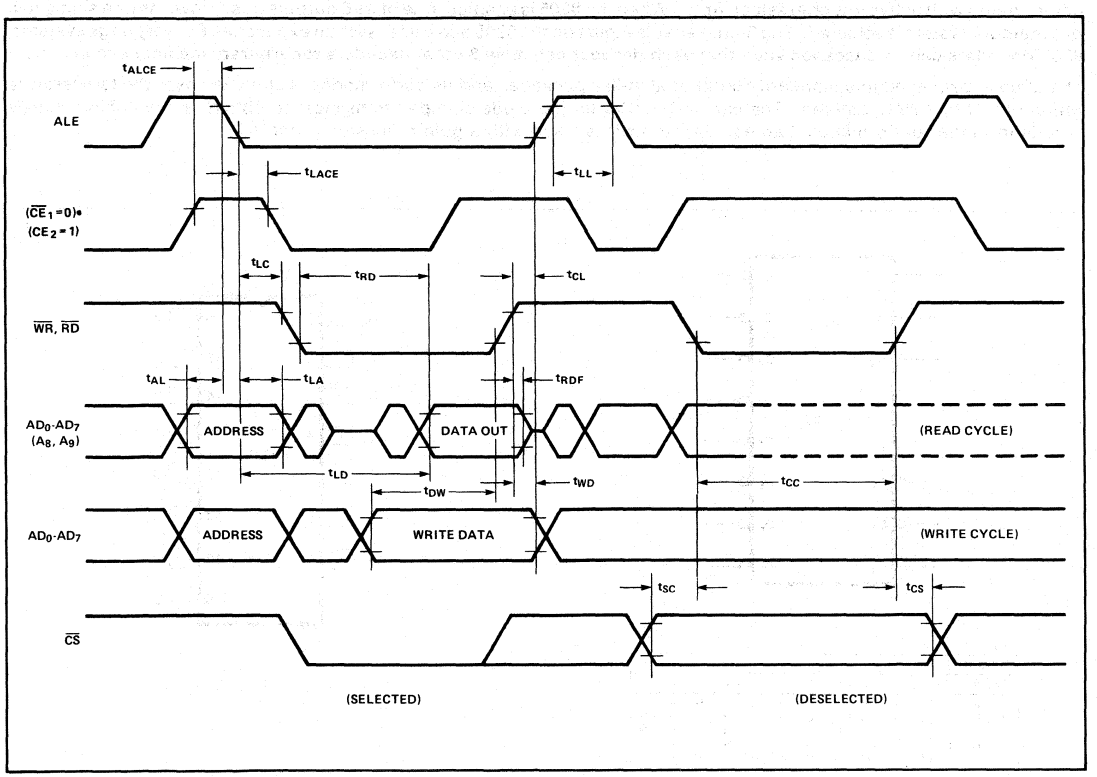

8205
HIGH SPEED 1 OUT OF 8 BINARY DECODER

- **I/O Port or Memory Selector**
- **Simple Expansion — Enable Inputs**
- **High Speed Schottky Bipolar Technology — 18ns Max. Delay**
- **Directly Compatible with TTL Logic Circuits**
- **Low Input Load Current — .25 mA max., 1/6 Standard TTL Input Load**
- **Minimum Line Reflection — Low Voltage Diode Input Clamp**
- **Outputs Sink 10 mA min.**
- **16-Pin Dual-In-Line Ceramic or Plastic Package**

The Intel® 8205 decoder can be used for expansion of systems which utilize input ports, output ports, and memory components with active low chip select input. When the 8205 is enabled, one of its 8 outputs goes "low," thus a single row of a memory system is selected. The 3-chip enable inputs on the 8205 allow easy system expansion. For very large systems, 8205 decoders can be cascaded such that each decoder can drive 8 other decoders for arbitrary memory expansions.

The 8205 is packaged in a standard 16-pin dual in-line package, and its performance is specified over the temperature range of 0°C to +75°C, ambient. The use of Schottky barrier diode clamped transistors to obtain fast switching speeds results in higher performance than equivalent devices made with a gold diffussion process.

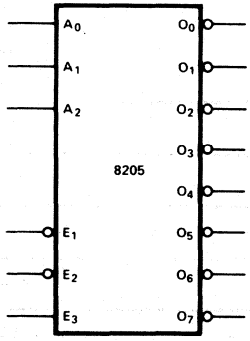

ADDRESS			ENABLE			OUTPUTS							
A_0	A_1	A_2	E_1	E_2	E_3	0	1	2	3	4	5	6	7
L	L	L	L	L	H	L	H	H	H	H	H	H	H
H	L	L	L	L	H	H	L	H	H	H	H	H	H
L	H	L	L	L	H	H	H	L	H	H	H	H	H
H	H	L	L	L	H	H	H	H	L	H	H	H	H
L	L	H	L	L	H	H	H	H	H	L	H	H	H
H	L	H	L	L	H	H	H	H	H	H	L	H	H
L	H	H	L	L	H	H	H	H	H	H	H	L	H
H	H	H	L	L	H	H	H	H	H	H	H	H	L
X	X	X	L	L	L	H	H	H	H	H	H	H	H
X	X	X	H	L	L	H	H	H	H	H	H	H	H
X	X	X	L	H	L	H	H	H	H	H	H	H	H
X	X	X	H	H	L	H	H	H	H	H	H	H	H
X	X	X	H	L	H	H	H	H	H	H	H	H	H
X	X	X	L	H	H	H	H	H	H	H	H	H	H
X	X	X	H	H	H	H	H	H	H	H	H	H	H

Figure 1. Logic Symbol

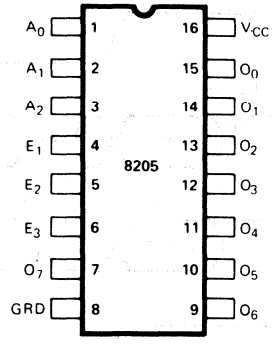

A_0-A_2	ADDRESS INPUTS
$\overline{E_1}$, $\overline{E_2}$, E_3	ENABLE INPUTS
$\overline{O_0}$-$\overline{O_7}$	DECODED OUTPUTS

Figure 2. Pin Configuration

FUNCTIONAL DESCRIPTION

Decoder

The 8205 contains a one out of eight binary decoder. It accepts a three bit binary code and by gating this input, creates an exclusive output that represents the value of the input code.

For example, if a binary code of 101 was present on the A0, A1 and A2 address input lines, and the device was enabled, an active low signal would appear on the $\overline{O5}$ output line. Note that all of the other output pins are sitting at a logic high, thus the decoded output is said to be exclusive. The decoders outputs will follow the truth table shown below in the same manner for all other input variations.

Enable Gate

When using a decoder it is often necessary to gate the outputs with timing or enabling signals so that the exclusive output of the decoded value is synchronous with the overall system.

The 8205 has a built-in function for such gating. The three enable inputs ($\overline{E1}$, $\overline{E2}$, E3) are ANDed together and create a single enable signal for the decoder. The combination of both active "high" and active "low" device enable inputs provides the designer with a powerfully flexible gating function to help reduce package count in his system.

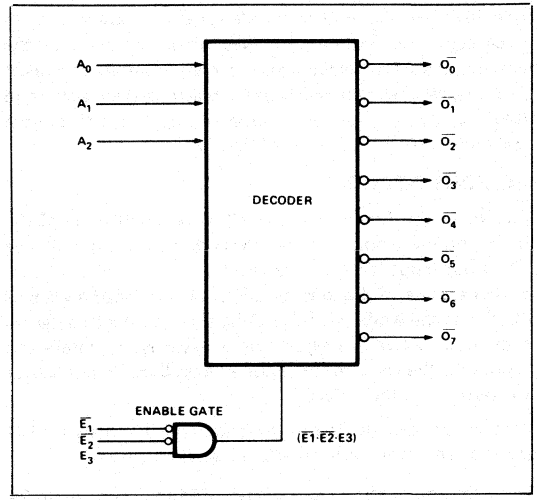

Figure 3. Enable Gate

ADDRESS			ENABLE			OUTPUTS							
A_0	A_1	A_2	E_1	E_2	E_3	0	1	2	3	4	5	6	7
L	L	L	L	L	H	L	H	H	H	H	H	H	H
H	L	L	L	L	H	H	L	H	H	H	H	H	H
L	H	L	L	L	H	H	H	L	H	H	H	H	H
H	H	L	L	L	H	H	H	H	L	H	H	H	H
L	L	H	L	L	H	H	H	H	H	L	H	H	H
H	L	H	L	L	H	H	H	H	H	H	L	H	H
L	H	H	L	L	H	H	H	H	H	H	H	L	H
H	H	H	L	L	H	H	H	H	H	H	H	H	L
X	X	X	L	L	L	H	H	H	H	H	H	H	H
X	X	X	H	L	L	H	H	H	H	H	H	H	H
X	X	X	L	H	L	H	H	H	H	H	H	H	H
X	X	X	H	H	L	H	H	H	H	H	H	H	H
X	X	X	H	L	H	H	H	H	H	H	H	H	H
X	X	X	L	H	H	H	H	H	H	H	H	H	H
X	X	X	H	H	H	H	H	H	H	H	H	H	H

Applications of the 8205

The 8205 can be used in a wide variety of applications in microcomputer systems. I/O ports can be decoded from the address bus, chip select signals can be generated to select memory devices and the type of machine state such as in 8008 systems can be derived from a simple decoding of the state lines (S0, S1, S2) of the 8008 CPU.

I/O PORT DECODER

Shown in the figure below is a typical application of the 8205. Address input lines are decoded by a group of 8205s (3). Each input has a binary weight. For example, A0 is assigned a value of 1 and is the LSB; A4 is assigned a value of 16 and is the MSB. By connecting them to the decoders as shown, an active low signal that is exclusive in nature and represents the value of the input address lines, is available at the outputs of the 8205s.

This circuit can be used to generate enable signals for I/O ports or any other decoder related application.

Note that no external gating is required to decode up to 24 exclusive devices and that a simple addition of an inverter or two will allow expansion to even larger decoder networks.

CHIP SELECT DECODER

Using a very similar circuit to the I/O port decoder, an array of 8205s can be used to create a simple interface to a 24K memory system.

The memory devices used can be either ROM or RAM and are 1K in storage capacity. 2708s and 2114As are devices typically used for this application. This type of memory device has ten (10) address inputs and an active "low" chip select ($\overline{CS}$). The lower order address bits A0–A9 which come from the microprocessor are "bussed" to all memory elements and the chip select to enable a specific device or group of devices comes from the array of 8205s. The output of the 8205 is active low so it is directly compatible with the memory components.

Basic operation is that the CPU issues an address to identify a specific memory location in which it wishes to "write" or "read" data. The most significant address bits A10-A14 are decoded by the array of 8205s and an exclusive, active low, chip select is generated that enables a specific memory device. The least significant address bits A0-A9 identify a specific location within the selected device. Thus, all addresses throughout the entire memory array are exclusive in nature and are non-redundant.

This technique can be expanded almost indefinitely to support even larger systems with the addition of a few inverters and an extra decoder (8205).

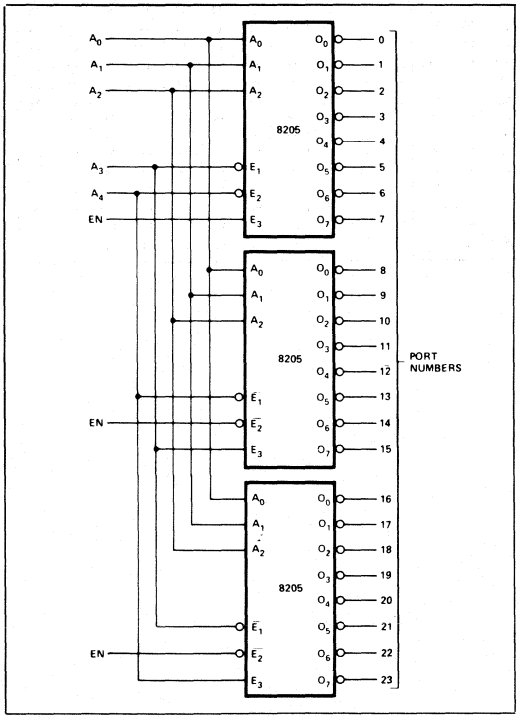

Figure 4. I/O Port Decoder

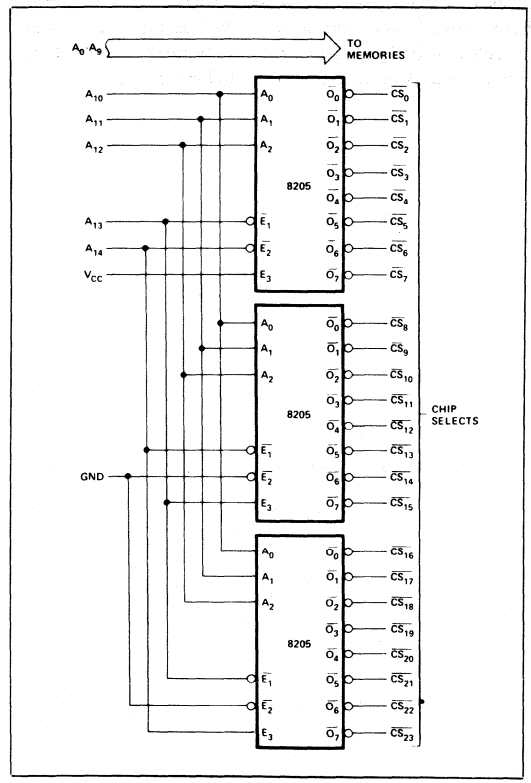

Figure 5. 24K Memory Interface

ABSOLUTE MAXIMUM RATINGS*

Temperature Under Bias:
- Ceramic ..... −65°C to +125°C
- Plastic ..... −65°C to +75°C

Storage Temperature ..... −65°C to +160°C
All Output or Supply Voltages ..... −0.5 to +7 Volts
All Input Voltages ..... −1.0 to +5.5 Volts
Output Currents ..... 125 mA

**NOTICE: Stresses above those listed under "Absolute Maximum Ratings" may cause permanent damage to the device. This is a stress rating only and functional operation of the device at these or at any other condition above those indicated in the operational sections of this specification is not implied. Exposure to absolute maximum rating conditions for extended periods may affect device reliability.*

D.C. CHARACTERISTICS (T_A = 0°C to +75°C, V_{CC} = 5V ±5%)

Symbol	Parameter	Limit		Unit	Test Conditions
		Min.	Max.		
I_F	INPUT LOAD CURRENT		−0.25	mA	V_{CC} = 5.25V, V_F = 0.45V
I_R	INPUT LEAKAGE CURRENT		10	μA	V_{CC} = 5.25V, V_R = 5.25V
V_C	INPUT FORWARD CLAMP VOLTAGE		−1.0	V	V_{CC} = 4.75V, I_C = −5.0 mA
V_{OL}	OUTPUT "LOW" VOLTAGE		0.45	V	V_{CC} = 4.75V, I_{OL} = 10.0 mA
V_{OH}	OUTPUT HIGH VOLTAGE	2.4		V	V_{CC} = 4.75V, I_{OH} = −1.5 mA
V_{IL}	INPUT "LOW" VOLTAGE		0.85	V	V_{CC} = 5.0V
V_{IH}	INPUT "HIGH" VOLTAGE	2.0		V	V_{CC} = 5.0V
I_{SC}	OUTPUT HIGH SHORT CIRCUIT CURRENT	−40	−120	mA	V_{CC} = 5.0V, V_{OUT} = 0V
V_{OX}	OUTPUT "LOW" VOLTAGE @ HIGH CURRENT		0.8	V	V_{CC} = 5.0V, I_{OX} = 40 mA
I_{CC}	POWER SUPPLY CURRENT		70	mA	V_{CC} = 5.25V

A.C. CHARACTERISTICS (T_A = 0°C to +75°C, V_{CC} = 5V ±5%; unless otherwise specified)

Symbol	Parameter		Max. Limit	Unit	Test Conditions
t_{++}	ADDRESS OR ENABLE TO OUTPUT DELAY		18	ns	
t_{-+}			18	ns	
t_{+-}			18	ns	
t_{--}			18	ns	
C_{IN} (1)	INPUT CAPACITANCE	P8205	4(typ.)	pF	f = 1 MHz, V_{CC} = 0V
		C8205	5(typ.)	pF	V_{BIAS} = 2.0V, T_A = 25°C

1. This parameter is periodically sampled and is not 100% tested.

TYPICAL CHARACTERISTICS

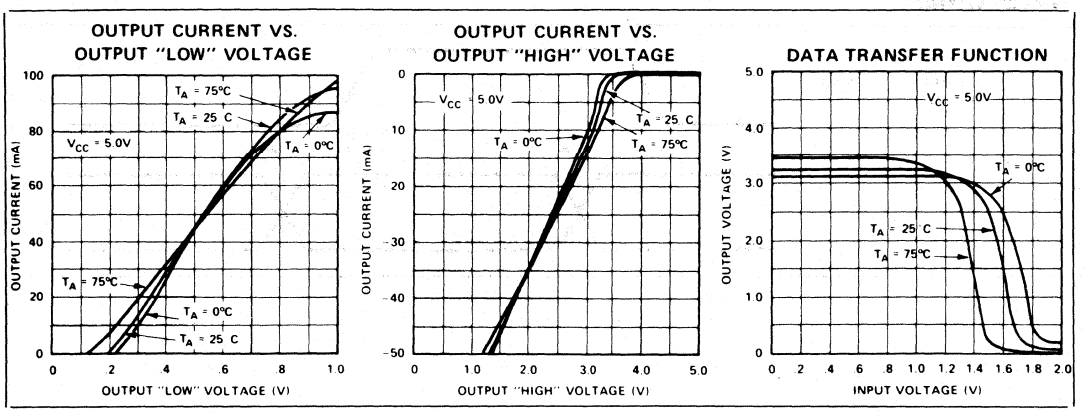

TYPICAL CHARACTERISTICS (Continued)

ADDRESS OR ENABLE TO OUTPUT DELAY VS. LOAD CAPACITANCE

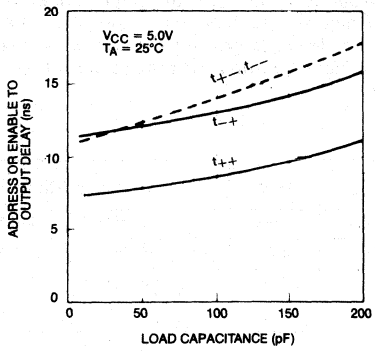

ADDRESS OR ENABLE TO OUTPUT DELAY VS. AMBIENT TEMPERATURE

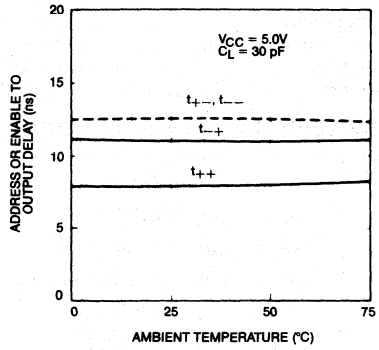

SWITCHING CHARACTERISTICS

CONDITIONS OF TEST:

Input pulse amplitudes: 2.5V

Input rise and fall times: 5 nsec between 1V and 2V

Measurements are made at 1.5V

TEST LOAD

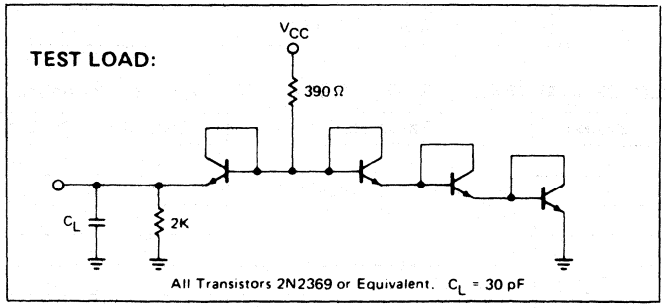

WAVEFORMS

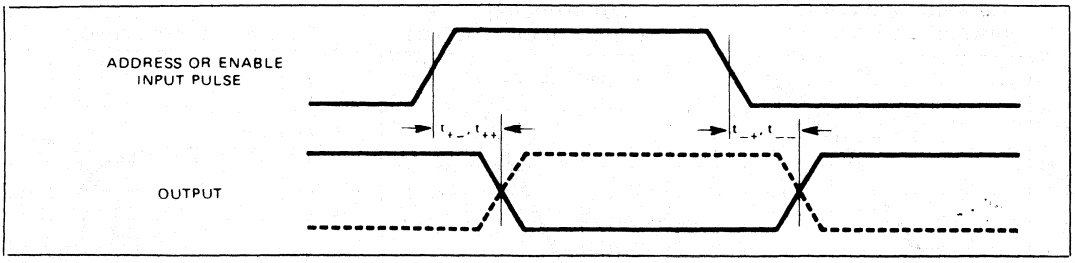

8212
8-BIT INPUT/OUTPUT PORT

- **Fully Parallel 8-Bit Data Register and Buffer**
- **Service Request Flip-Flop for Interrupt Generation**
- **Low Input Load Current — .25mA Max.**
- **Three State Outputs**
- **Outputs Sink 15mA**
- **3.65V Output High Voltage for Direct Interface to 8008, 8080A, or 8085A CPU**
- **Asynchronous Register Clear**
- **Replaces Buffers, Latches and Multiplexers in Microcomputer Systems**
- **Reduces System Package Count**

The 8212 input/output port consists of an 8-bit latch with 3-state output buffers along with control and device selection logic. Also included is a service request flip-flop for the generation and control of interrupts to the microprocessor.

The device is multimode in nature. It can be used to implement latches, gated buffers or multiplexers. Thus, all of the principal peripheral and input/output functions of a microcomputer system can be implemented with this device.

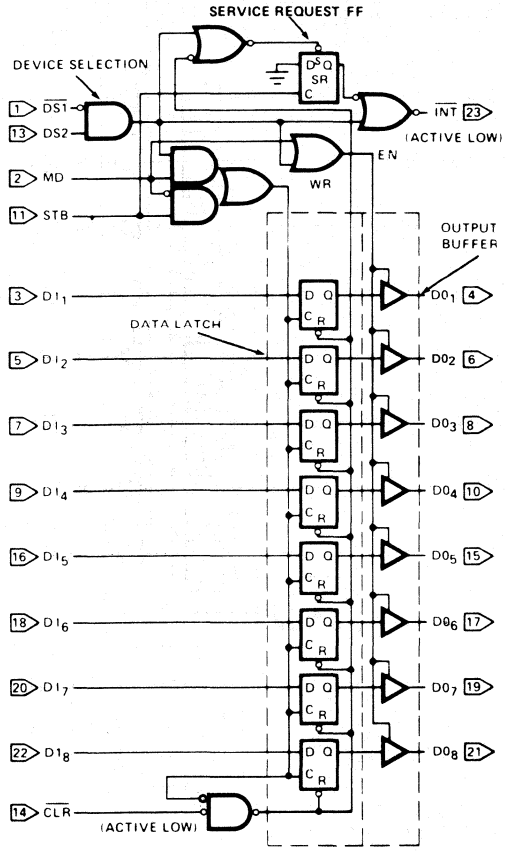

Figure 1. Logic Diagram

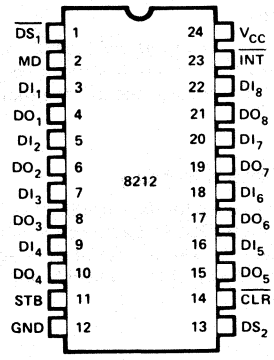

DI_1-DI_8	DATA IN
DO_1-DO_8	DATA OUT
$\overline{DS_1}$-DS_2	DEVICE SELECT
MD	MODE
STB	STROBE
$\overline{INT}$	INTERRUPT (ACTIVE LOW)
$\overline{CLR}$	CLEAR (ACTIVE LOW)

Figure 2. Pin Configuration

FUNCTIONAL DESCRIPTION

Data Latch

The 8 flip-flops that make up the data latch are of a "D" type design. The output (Q) of the flip-flop will follow the data input (D) while the clock input (C) is high. Latching will occur when the clock (C) returns low.

The latched data is cleared by an asynchronous reset input ($\overline{CLR}$). (Note: Clock (C) Overrides Reset ($\overline{CLR}$).)

Output Buffer

The outputs of the data latch (Q) are connected to 3-state, non-inverting output buffers. These buffers have a common control line (EN); this control line either enables the buffer to transmit the data from the outputs of the data latch (Q) or disables the buffer, forcing the output into a high impedance state. (3-state)

The high-impedance state allows the designer to connect the 8212 directly onto the microprocessor bi-directional data bus.

Control Logic

The 8212 has control inputs $\overline{DS1}$, DS2, MD and STB. These inputs are used to control device selection, data latching, output buffer state and service request flip-flop.

$\overline{DS1}$, DS2 (Device Select)

These 2 inputs are used for device selection. When $\overline{DS1}$ is low and DS2 is high ($\overline{DS1} \cdot DS2$) the device is selected. In the selected state the output buffer is enabled and the service request flip-flop (SR) is asynchronously set.

MD (Mode)

This input is used to control the state of the output buffer and to determine the source of the clock input (C) to the data latch.

When MD is high (output mode) the output buffers are enabled and the source of clock (C) to the data latch is from the device selection logic ($\overline{DS1} \cdot DS2$).

When MD is low (input mode) the output buffer state is determined by the device selection logic ($\overline{DS1} \cdot DS2$) and the source of clock (C) to the data latch is the STB (Strobe) input.

STB (Strobe)

This input is used as the clock (C) to the data latch for the input mode MD = 0) and to synchronously reset the service request flip-flop (SR).

Note that the SR flip-flop is negative edge triggered.

Service Request Flip-Flop

The (SR) flip-flop is used to generate and control interrupts in microcomputer systems. It is asynchronously set by the $\overline{CLR}$ input (active low). When the (SR) flip-flop is set it is in the non-interrupting state.

The output of the (SR) flip-flop (Q) is connected to an inverting input of a "NOR" gate. The other input to the "NOR" gate is non-inverting and is connected to the device selection logic ($\overline{DS1} \cdot DS2$). The output of the "NOR" gate ($\overline{INT}$) is active low (interrupting state) for connection to active low input priority generating circuits.

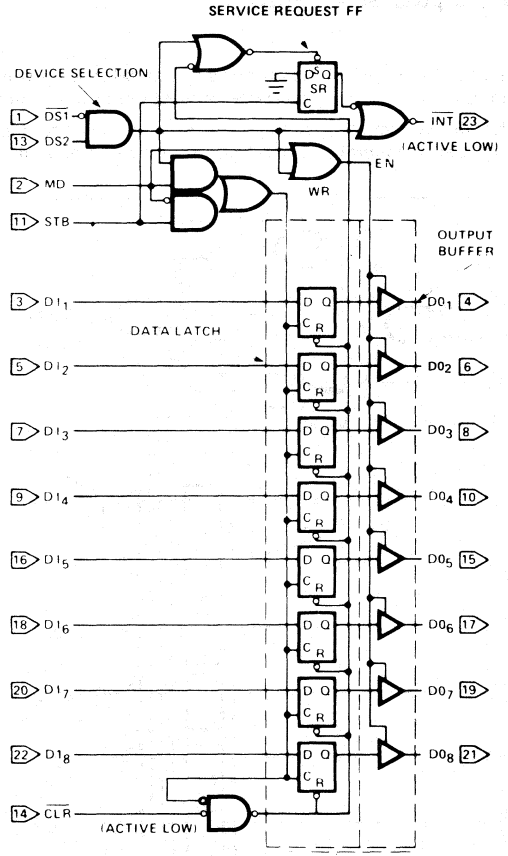

STB	MD	($DS_1 \cdot DS_2$)	DATA OUT EQUALS
0	0	0	3-STATE
1	0	0	3-STATE
0	1	0	DATA LATCH
1	1	0	DATA LATCH
0	0	1	DATA LATCH
1	0	1	DATA IN
0	1	1	DATA IN
1	1	1	DATA IN

$\overline{CLR}$ – RESETS DATA LATCH
SETS SR FLIP-FLOP
(NO EFFECT ON OUTPUT BUFFER)

CLR	($\overline{DS_1} \cdot DS_2$)	STB	*SR	INT
0	0	0	1	1
0	1	0	1	0
1	1	↓	0	0
1	1	0	1	0
1	0	0	1	1
1	1	↓	1	0

*INTERNAL SR FLIP-FLOP

ABSOLUTE MAXIMUM RATINGS*

Temperature Under Bias Plastic ..... 0°C to +70°C
Storage Temperature ..... -65°C to +160°C
All Output or Supply Voltages ..... -0.5 to +7 Volts
All Input Voltages ..... -1.0 to 5.5 Volts
Output Currents 100mA

NOTICE: Stresses above those listed under "Absolute Maximum Ratings" may cause permanent damage to the device. This is a stress rating only and functional operation of the device at these or any other conditions above those indicated in the operational sections of this specification is not implied. Exposure to absolute maximum rating conditions for extended periods may affect device reliability.

D.C. CHARACTERISTICS (T_A=0°C to +75°C, V_{CC}= +5V ± 5%)

Symbol	Parameter	Limits			Unit	Test Conditions
		Min.	Typ.	Max.		
I_F	Input Load Current, ACK, DS_2, CR, DI_1-DI_8 Inputs			-.25	mA	V_F = .45V
I_F	Input Load Current MD Input			-.75	mA	V_F = .45V
I_F	Input Load Current DS_1 Input			-1.0	mA	V_F = .45V
I_R	Input Leakage Current, ACK, DS, CR, DI_1-DI_8 Inputs			10	μA	$V_R \leq V_{CC}$
I_R	Input Leakage Current MO Input			30	μA	$V_R \leq V_{CC}$
I_R	Input Leakage Current DS_1 Input			40	μA	$V_R \leq V_{CC}$
V_C	Input Forward Voltage Clamp			-1	V	I_C = -5mA
V_{IL}	Input "Low" Voltage			.85	V	
V_{IH}	Input "High" Voltage	2.0			V	
V_{OL}	Output "Low" Voltage			.45	V	I_{OL} = 15mA
V_{OH}	Output "High" Voltage	3.65	4.0		V	I_{OH} = -1mA
I_{SC}	Short Circuit Output Current	-15		-75	mA	V_O = 0V, V_{CC} = 5V
$\|I_O\|$	Output Leakage Current High Impedance State			20	μA	V_O = .45V/5.25V
I_{CC}	Power Supply Current		90	130	mA	

CAPACITANCE* (F = 1MHz, V_{BIAS} = 2.5V, V_{CC} = +5V, T_A = 25°C)

Symbol	Test	Limits	
		Typ.	Max.
C_{IN}	DS_1 MD Input Capacitance	9pF	12pF
C_{IN}	DS_2, $\overline{CLR}$, STB, DI_1-DI_8 Input Capacitance	5pF	9pF
C_{OUT}	DO_1-DO_8 Output Capacitance	8pF	12pF

*This parameter is sampled and not 100% tested.

A.C. TESTING LOAD CIRCUIT

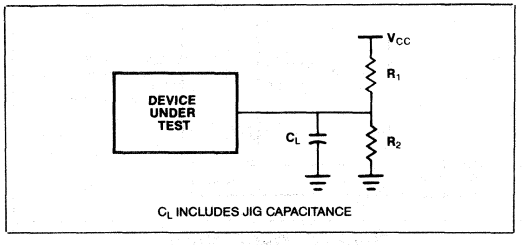

SWITCHING CHARACTERISTICS

Conditions of Test

Input Pulse Amplitude = 2.5V
Input Rise and Fall Times 5ns
Between 1V and 2V Measurements made at 1.5V
with 15mA and 30pF Test Load

NOTE:
1.

Test	C_L*	R_1	R_2
t_{PD}, t_{WE}, t_R, t_S, t_C	30pF	300Ω	600Ω
t_E, ENABLE↑	30pF	10KΩ	1KΩ
t_E, ENABLE ↓	30pF	300Ω	600Ω
t_E, DISABLE↑	5pF	300Ω	600Ω
t_E, DISABLE↓	5pF	10KΩ	1KΩ

*Includes probe and jig capacitance.

A.C. CHARACTERISTICS (T_A = 0°C to +70°C, V_{CC} = +5V ± 5%)

Symbol	Parameter	Limits			Unit	Test Conditions
		Min.	Typ.	Max.		
t_{PW}	Pulse Width	30			ns	
t_{PD}	Data to Output Delay			30	ns	Note 1
t_{WE}	Write Enable to Output Delay			40	ns	Note 1
t_{SET}	Data Set Up Time	15			ns	
t_H	Data Hold Time	20			ns	
t_R	Reset to Output Delay			40	ns	Note 1
t_S	Set to Output Delay			30	ns	Note 1
t_E	Output Enable/Disable Time			45	ns	Note 1
t_C	Clear to Output Delay			55	ns	Note 1

APPLICATIONS

Basic Schematic Symbols

Two examples of ways to draw the 8212 on system schematics—(1) the top being the detailed view showing pin numbers, and (2) the bottom being the symbolic view showing the system input or output as a system bus (bus containing 8 parallel lines). The output to the data bus is symbolic in referencing 8 parallel lines.

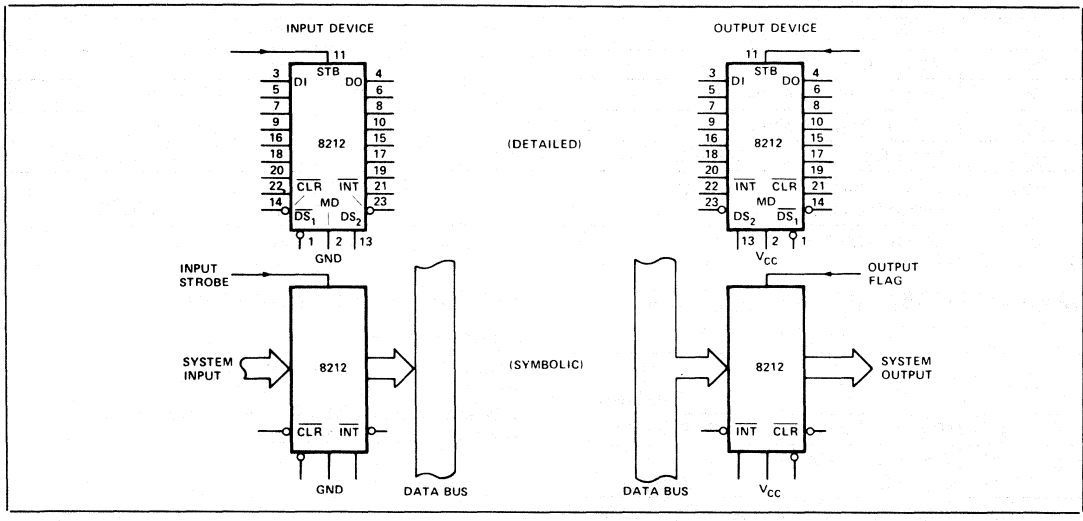

Figure 3. Basic Schematic Symbols

Gated Buffer (3-State)

The simplest use of the 8212 is that of a gated buffer. By tying the mode signal low and the strobe input high, the data latch is acting as a straight through gate. The output buffers are then enabled from the device selection logic $\overline{DS1}$ and DS2.

When the device selection logic is false, the outputs are 3-state.

When the device selection logic is true, the input data from the system is directly transferred to the output. The input data load is 250 micro amps. The output data can sink 15 milli amps. The minimum high output is 3.65 volts.

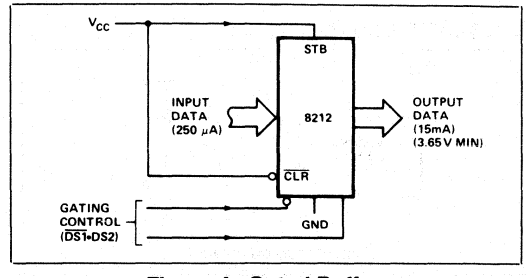

Figure 4. Gated Buffer

Bi-Directional Bus Driver

A pair of 8212's wired (back-to-back) can be used as a symmetrical drive, bi-directional bus driver. The devices are controlled by the data bus input control which is connected to $\overline{DS1}$ on the first 8212 and to DS2 on the second. One device is active, and acting as a straight through buffer the other is in 3-state mode. This is a very useful circuit in small system design.

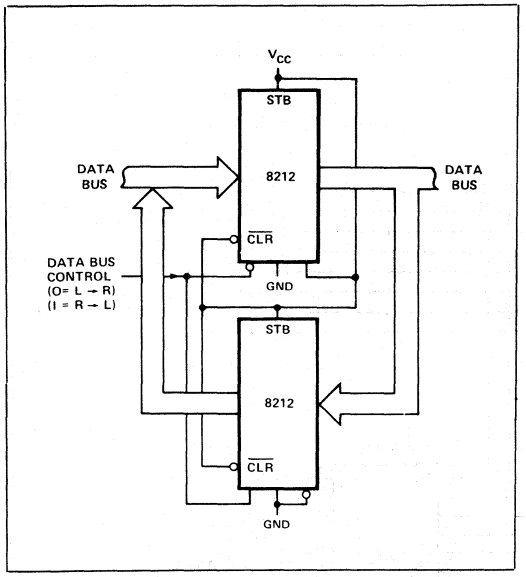

Figure 5. Bidirectional Bus Driver

Interrupting Input Port

This use of an 8212 is that of a system input port that accepts a strobe from the system input source, which in turn clears the service request flip-flop and interrupts the processor. The processor then goes through a service routine, identifies the port, and causes the device selection logic to go true — enabling the system input data onto the data bus.

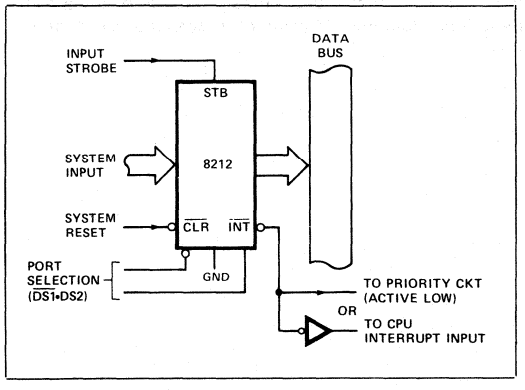

Figure 6. Interrupting Input Port

Interrupt Instruction Port

The 8212 can be used to gate the interrupt instruction, normally RESTART instructions, onto the data bus. The device is enabled from the interrupt acknowledge signal from the microprocessor and from a port selection signal. This signal is normally tied to ground. ($\overline{DS1}$ could be used to multiplex a variety of interrupt instruction ports onto a common bus).

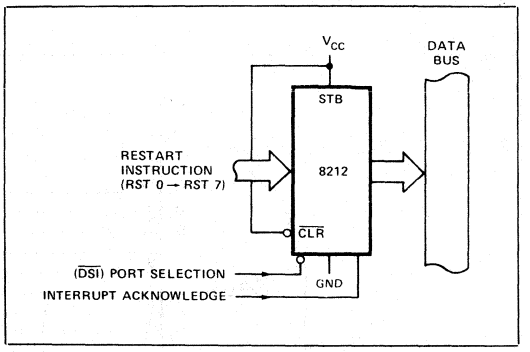

Figure 7. Interrupt Instruction Port

Output Port (With Hand-Shaking)

The 8212 can be used to transmit data from the data bus to a system output. The output strobe could be a hand-shaking signal such as "reception of data" from the device that the system is outputting to. It in turn, can interrupt the system signifying the reception of data. The selection of the port comes from the device selection logic.($\overline{DS1}$ · DS2)

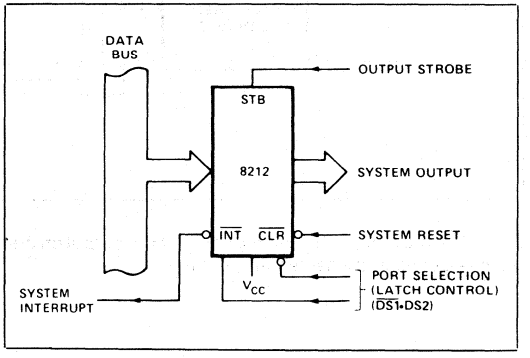

Figure 8. Output Port

808A Status Latch

Here the 8212 is used as the status latch for an 8080A microcomputer system. The input to the 8212 latch is directly from the 8080A data bus. Timing shows that when the SYNC signal is true, which is connected to the DS2 input and the phase 1 signal is true, which is a TTL level coming from the clock generator; then, the status data will be latched into the 8212.

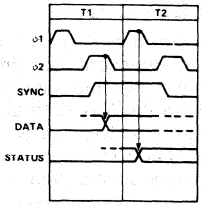

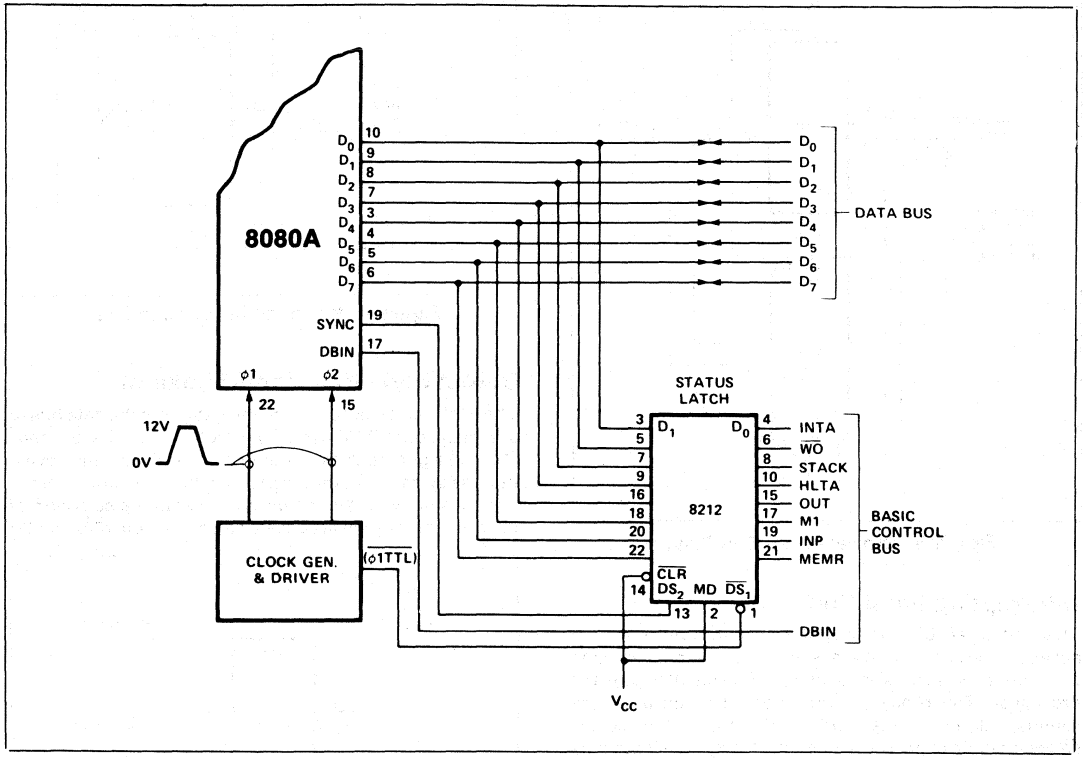

Note: The mode signal is tied high so that the output on the latch is active and enabled all the time.

It is shown that the two areas of concern are the bi-directional data bus of the microprocessor and the control bus.

TYPICAL CHARACTERISTICS

INPUT CURRENT VS. INPUT VOLTAGE

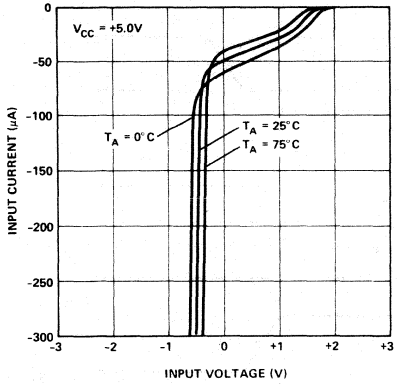

OUTPUT CURRENT VS. OUTPUT "LOW" VOLTAGE

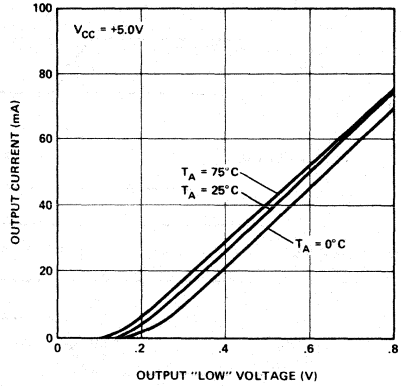

OUTPUT CURRENT VS. OUTPUT "HIGH" VOLTAGE

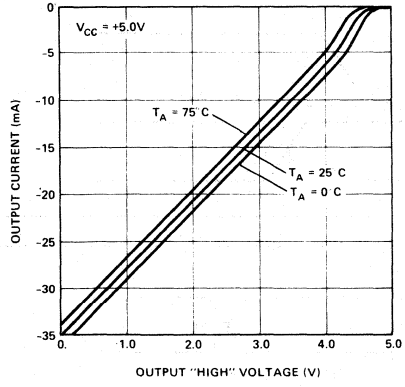

DATA TO OUTPUT DELAY VS. LOAD CAPACITANCE

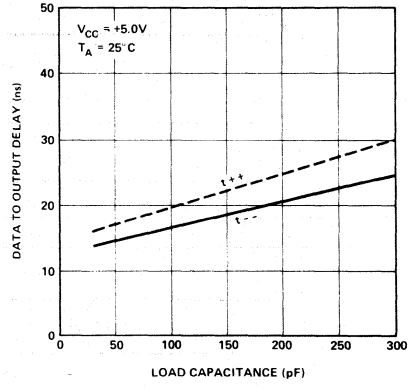

DATA TO OUTPUT DELAY VS. TEMPERATURE

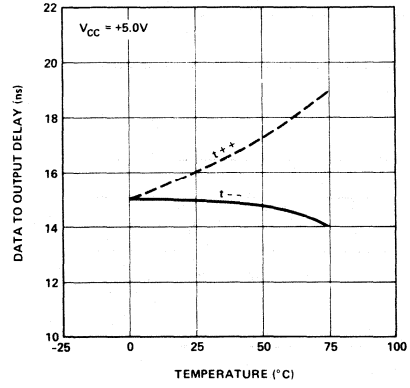

WRITE ENABLE TO OUTPUT DELAY VS. TEMPERATURE

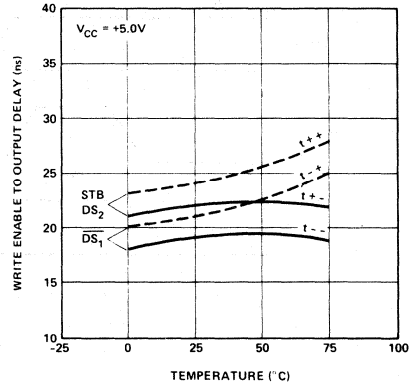

WAVEFORMS

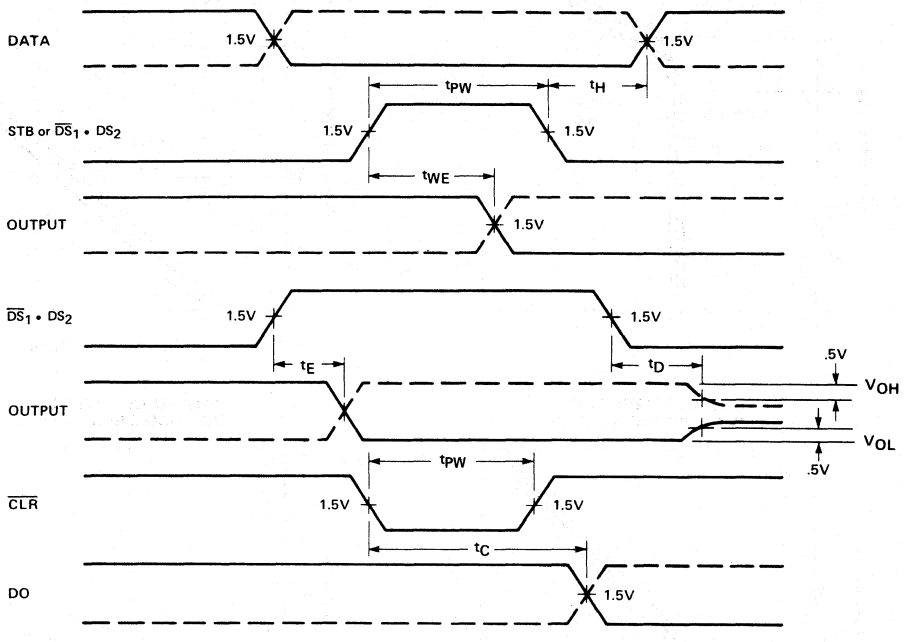
DATA
1.5V
1.5V
tPW
tH
STB or $\overline{DS_1}$ • DS_2
1.5V
1.5V
tWE
OUTPUT
1.5V
$\overline{DS_1}$ • DS_2
1.5V
1.5V
tE
tD
.5V
V_{OH}
OUTPUT
V_{OL}
.5V
tPW
$\overline{CLR}$
1.5V
1.5V
tC
DO
1.5V

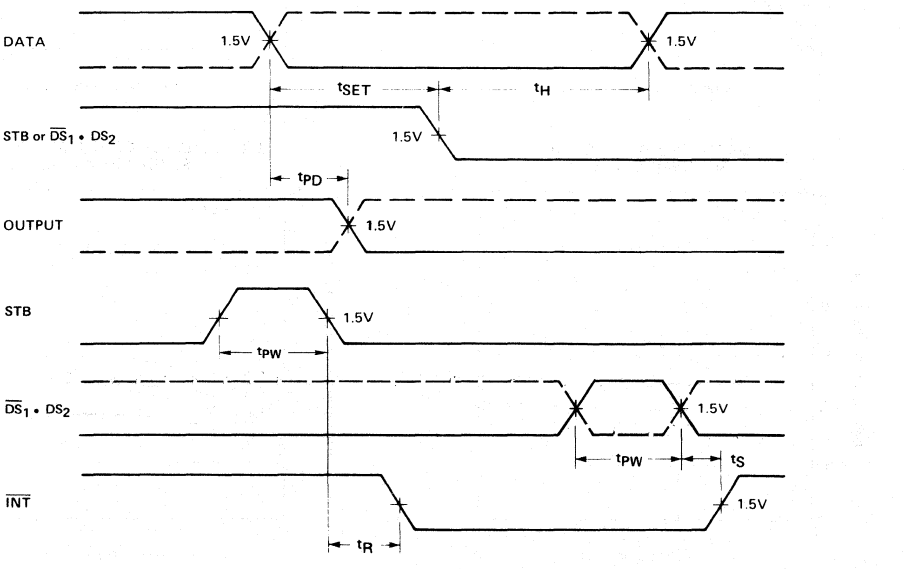
DATA
1.5V
1.5V
tSET
tH
STB or $\overline{DS_1}$ • DS_2
1.5V
tPD
OUTPUT
1.5V
STB
1.5V
tPW
$\overline{DS_1}$ • DS_2
1.5V
tPW
tS
$\overline{INT}$
1.5V
tR

8216/8226
4-BIT PARALLEL BIDIRECTIONAL BUS DRIVER

- **Data Bus Buffer Driver for 8080 CPU**
- **Low Input Load Current — 0.25 mA Maximum**
- **High Output Drive Capability for Driving System Bus**
- **3.65V Output High Voltage for Direct Interface to 8080 CPU**
- **3-State Outputs**
- **Reduces System Package Count**

The 8216/8226 is a 4-bit bidirectional bus driver/receiver. All inputs are low power TTL compatible. For driving MOS, the DO outputs provide a high 3.65V V_{OH}, and for high capacitance terminated bus structures, the DB outputs provide a high 50 mA I_{OL} capability. A non-inverting (8216) and an inverting (8226) are available to meet a wide variety of applications for buffering in microcomputer systems.

*Note: The specifications for the 3216/3226 are identical with those for the 8216/8226.

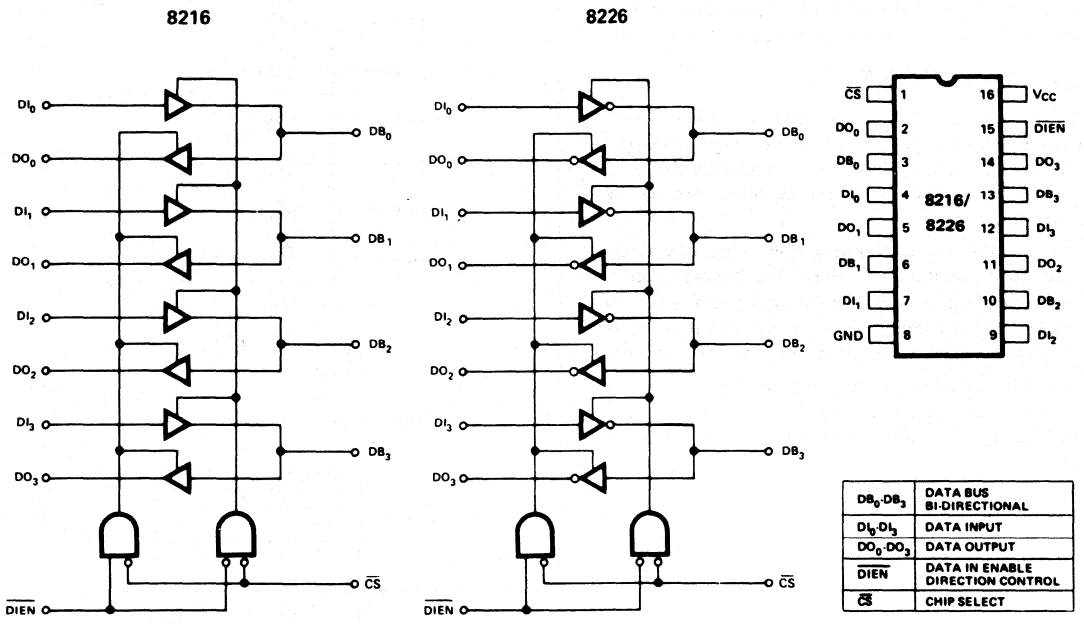

Figure 1. Block Diagrams

Figure 2. Pin Configuration

FUNCTIONAL DESCRIPTION

Microprocessors like the 8080 are MOS devices and are generally capable of driving a single TTL load. The same is true for MOS memory devices. While this type of drive is sufficient in small systems with few components, quite often it is necessary to buffer the microprocessor and memories when adding components or expanding to a multi-board system.

The 8216/8226 is a four bit bi-directional bus driver specifically designed to buffer microcomputer system components.

Bidirectional Driver

Each buffered line of the four bit driver consists of two separate buffers that are tri-state in nature to achieve direct bus interface and bi-directional capability. On one side of the driver the output of one buffer and the input of another are tied together (DB), this side is used to interface to the system side components such as memories, I/O, etc., because its interface is direct TTL compatible and it has high drive (50mA). On the other side of the driver the inputs and outputs are separated to provide maximum flexibility. Of course, they can be tied together so that the driver can be used to buffer a true bi-directional bus such as the 8080 Data Bus. The DO outputs on this side of the driver have a special high voltage output drive capability (3.65V) so that direct interface to the 8080 and 8008 CPUs is achieved with an adequate amount of noise immunity (350mV worst case).

Control Gating $\overline{DIEN}$, $\overline{CS}$

The $\overline{CS}$ input is actually a device select. When it is "high" the output drivers are all forced to their high-impedance state. When it is at "zero" the device is selected (enabled) and the direction of the data flow is determined by the $\overline{DIEN}$ input.

The $\overline{DIEN}$ input controls the direction of data flow (see Figure 3) for complete truth table. This direction control is accomplished by forcing one of the pair of buffers into its high impedance state and allowing the other to transmit its data. A simple two gate circuit is used for this function.

The 8216/8226 is a device that will reduce component count in microcomputer systems and at the same time enhance noise immunity to assure reliable, high performance operation.

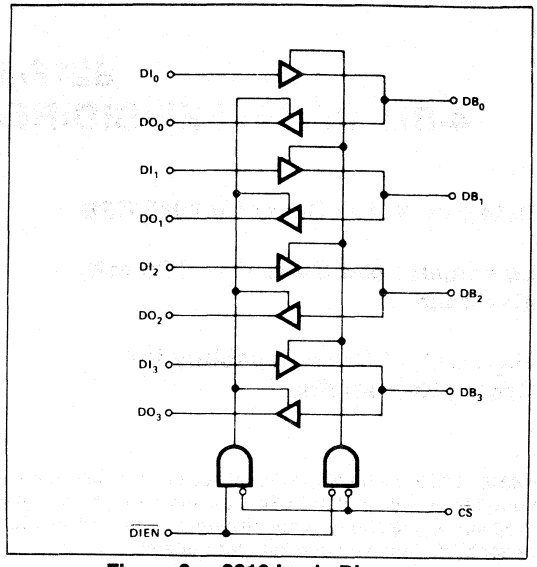

Figure 3a. 8216 Logic Diagram

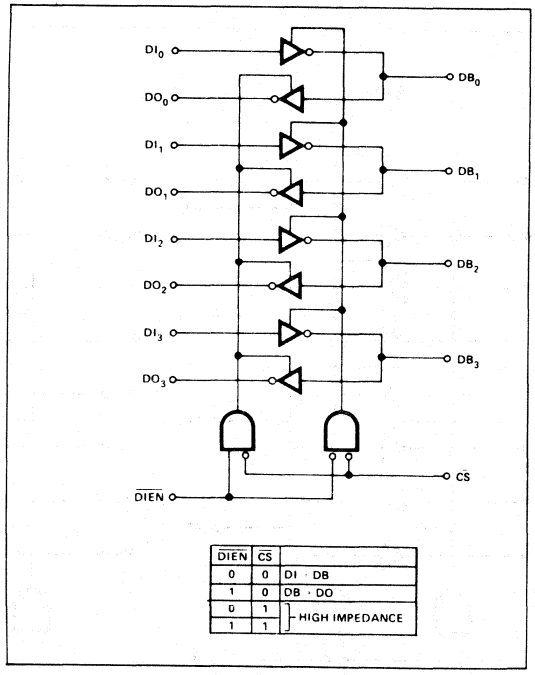

$\overline{DIEN}$	$\overline{CS}$	
0	0	DI → DB
1	0	DB → DO
0	1	HIGH IMPEDANCE
1	1	

Figure 3b. 8226 Logic Diagram

ABSOLUTE MAXIMUM RATINGS*

Temperature Under Bias . . . . . 0°C to 70°C
Storage Temperature . . . . . -65°C to +150°C
All Output and Supply Voltages . . . . . -0.5V to +7V
All Input Voltages . . . . . -1.0V to +5.5V
Output Currents . . . . . 125 mA

NOTICE: Stresses above those listed under "Absolute Maximum Ratings" may cause permanent damage to the device. This is a stress rating only and functional operation of the device at these or any other conditions above those indicated in the operational sections of this specification is not implied. Exposure to absolute maximum rating conditions for extended periods may affect device reliability.

D.C. CHARACTERISTICS (T_A = 0°C to +70°C, V_{CC} = +5V ± 5%)

Symbol	Parameter		Limits Min.	Typ.	Max.	Unit	Conditions
I_{F1}	Input Load Current $\overline{DIEN}$, $\overline{CS}$			-0.15	-.5	mA	V_F = 0.45
I_{F2}	Input Load Current All Other Inputs			-0.08	-.25	mA	V_F = 0.45
I_{R1}	Input Leakage Current $\overline{DIEN}$, $\overline{CS}$				80	μA	V_R = 5.25V
I_{R2}	Input Leakage Current DI Inputs				40	μA	V_R = 5.25V
V_C	Input Forward Voltage Clamp				-1	V	I_C = -5mA
V_{IL}	Input "Low" Voltage				.95	V	
V_{IH}	Input "High" Voltage		2.0			V	
$\|I_O\|$	Output Leakage Current (3-State)	DO DB			20 100	μA	V_O = 0.45V/5.25V
I_{CC}	Power Supply Current	8216		95	130	mA	
		8226		85	120	mA	
V_{OL1}	Output "Low" Voltage			0.3	.45	V	DO Outputs I_{OL}=15mA DB Outputs I_{OL}=25mA
V_{OL2}	Output "Low" Voltage	8216		0.5	.6	V	DB Outputs I_{OL}=55mA
		8226		0.5	.6	V	DB Outputs I_{OL}=50mA
V_{OH1}	Output "High" Voltage		3.65	4.0		V	DO Outputs I_{OH} = -1mA
V_{OH2}	Output "High" Voltage		2.4	3.0		V	DB Outputs I_{OH} = -10mA
I_{OS}	Output Short Circuit Current		-15 -30	-35 -75	-65 -120	mA mA	DO Outputs $V_O \cong 0V$, DB Outputs V_{CC}=5.0V

NOTE:

Typical values are for T_A = 25°C, V_{CC} = 5.0V.

CAPACITANCE[5] (V_{BIAS} = 2.5V, V_{CC} = 5.0V, T_A = 25°C, f = 1 MHz)

Symbol	Parameter	Limits			Unit
		Min.	Typ.[1]	Max.	
C_{IN}	Input Capacitance		4	8	pF
C_{OUT1}	Output Capacitance		6	10	pF
C_{OUT2}	Output Capacitance		13	18	pF

A.C. CHARACTERISTICS (T_A = 0°C to +70°C, V_{CC} = +5V ± 5%)

Symbol	Parameter	Limits			Unit	Conditions
		Min.	Typ.[1]	Max.		
T_{PD1}	Input to Output Delay DO Outputs		15	25	ns	C_L=30pF, R_1=300Ω R_2=600Ω
T_{PD2}	Input to Output Delay DB Outputs					
	8216		19	30	ns	C_L=300pF, R_1=90Ω
	8226		16	25	ns	R_2 = 180Ω
T_E	Output Enable Time					
	8216		42	65	ns	(Note 2)
	8226		36	54	ns	(Note 3)
T_D	Output Disable Time		16	35	ns	(Note 4)

NOTE:
Input pulse amplitude of 2.5V.
Input rise and fall times of 5 ns between 1 and 2 volts.
Output loading is 5 mA and 10 pF.
Speed measurements are made at 1.5 volt levels.

NOTES:
1. Typical values are for T_A = 25°C, V_{CC} = 5.0V.
2. DO Outputs, C_L = 30pF, R_1 = 300/10 KΩ, R_2 = 180/1KΩ; DB Outputs, C_L = 300pF, R_1 = 90/10 KΩ, R_2 = 180/1 KΩ.
3. DO Outputs, C_L = 30pF, R_1 = 300/10 KΩ, R_2 = 600/1K; DB Outputs, C_L = 300pF, R_1 = 90/10 KΩ, R_2 = 180/1 KΩ.
4. DO Outputs, C_L = 5pF, R_1 = 300/10 KΩ, R_2 = 600/1 KΩ; DB Outputs, C_L = 5pF, R_1 = 90/10 KΩ, R_2 = 180/1 KΩ.
5. This parameter is periodically sampled and not 100% tested.

A.C. TESTING LOAD CIRCUIT

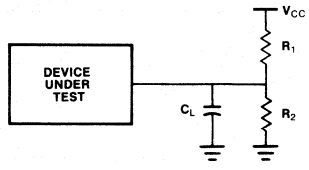

WAVEFORM

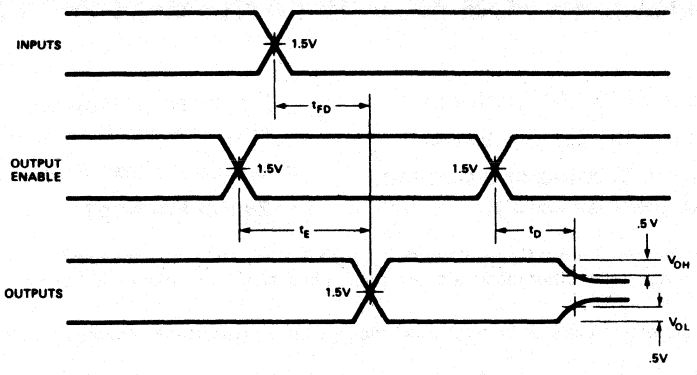
INPUTS
1.5V
t_{FD}
OUTPUT ENABLE
1.5V
1.5V
t_E
t_D
.5 V
V_{OH}
OUTPUTS
1.5V
V_{OL}
.5V

8218/8219
BIPOLAR MICROCOMPUTER BUS CONTROLLERS FOR MCS-80® AND MCS-85® FAMILIES

- **8218 for Use in MCS-80® Systems**
- **8219 for Use inMCS-85® Systems**
- **Coordinates the Sharing of a Common Bus Between Several CPU's**
- **Reduces Component Count in Multimaster Bus Arbitration Logic**
- **Single +5 Volt Power Supply**
- **28 Pin Package**

The 8218 and 8219 Microcomputer Bus Controllers consist of control logic which allows a bus master device such as a CPU or DMA channel to interface with other masters on a common bus, sharing memory and I/O devices. The 8218 and 8219 consist of:

1. Bus Arbitration Logic which operates from the Bus Clock ($\overline{BCLK}$) and resolves bus contention between devices sharing a common bus.
2. Timing Logic which when initiated by the bus arbitration logic generates timing signals for the memory and I/O command lines to guarantee set-up and hold times of the address/data lines onto the bus. The timing logic also signals to the bus arbitration logic when the current data transfer is completed and the bus is no longer needed.
3. Output Drive Logic which contains the logic and output drivers for the memory and I/O command lines.

An external RC time constant is used with the timing logic to generate the guaranteed address set-up and hold times on the bus. The 8219 can interface directly to the 8085A CPU and the 8218 interfaces to the 8080A CPU chip and the 8257 DMA controller.

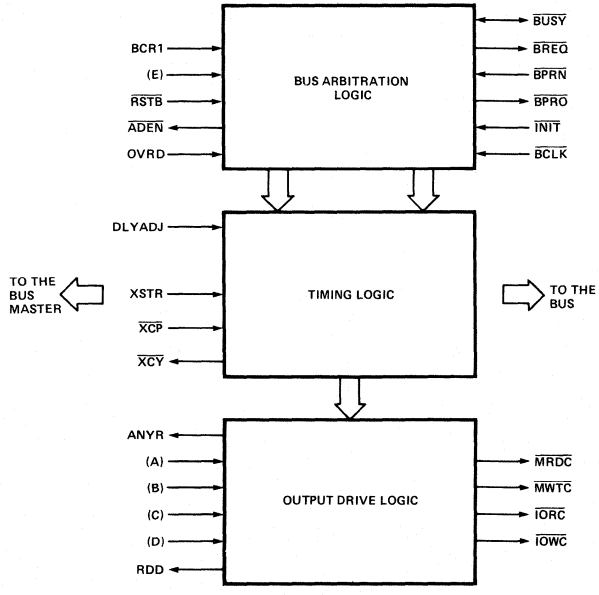

Figure 1. Block Diagram

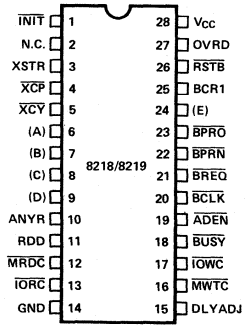

	8218	8219
(A)	$\overline{IOWR}$	IO/$\overline{M}$
(B)	$\overline{MWTR}$	$\overline{WR}$
(C)	$\overline{IORR}$	$\overline{RD}$
(D)	$\overline{MRDR}$	$\overline{ASRQ}$
(E)	$\overline{BCR2}$	BCR2

N.C. = NO CONNECT

Figure 2. Pin Configuration

Table 1. Pin Description

Signals Interfaced Directly to the System Bus		
Symbol	**Type**	**Name and Function**
$\overline{BREQ}$	O	**Bus Request:** The Bus Request is used with a central parallel priority resolution circuit. It indicates that the device needs to access the bus for one or more data transfers. It is synchronized with the Bus Clock.
$\overline{BUSY}$	I/O	**Bus Busy:** Bus Busy indicates to all master devices on the bus that the bus is in use. It inhibits any other device from getting the bus. It is synchronized with Bus Clock.
$\overline{BCLK}$	I	**Bus Clock:** The negative edge of Bus Clock is used to synchronize the bus contention resolution circuit asynchronously to the CPU clock. It has 100ns min. period, 35%–65% duty cycle. It may be slowed, single stepped or stopped.
$\overline{BPRN}$	I	**Bus Priority In:** The Bus Priority In indicates to a device that no device of a higher priority is requesting the bus. It is synchronous with the Bus clock.
$\overline{BPRO}$	O	**Bus Priority Out:** The Bus Priority Out is used with serial priority resolution circuits. Priority may be transferred to the next lower in priority as $\overline{BPRN}$.
$\overline{INIT}$	I	**Initialize:** The Initialize resets the 8218/8219 to a known internal state.
$\overline{MRDC}$	O	**Memory Read Control:** The Memory Read Control indicates that the Master is requesting a read operation from the addressed location. It is asynchronous to the Bus Clock.
$\overline{MWTC}$	O	**Memory Write Control:** The Memory Write Control indicates that data and an address have been placed on the bus by the Master and the data is to be deposited at that location. It is asynchronous to the Bus Clock.
$\overline{IORC}$	O	**I/O Read Control:** The I/O Read Control indicates that the Master is requesting a read operation from the I/O device addressed. It is asynchronous to the Bus Clock.
$\overline{IOWC}$	O	**I/O Write Control:** The I/O Write Control indicates that Data and an I/O device address has been placed on the bus by the Master and the data is to be deposited to the I/O device. It is asynchronous to the Bus Clock.
Signals Generated or Received by the Bus Master		
BCR1/$\overline{BCR2}$	I	**Bus Control Request:** Bus Control Request 1 or Bus Control Request 2 indicate to the 8218/8219 that the Master device is making a request to control the bus. BCR2 is active low in the 8218 ($\overline{BCR2}$). BCR2 is active high in the 8219.
RSTB	I	**Request Strobe:** Request Strobe latches the status of BCR1 and BCR2 into the 8218/8219. The strobe is active low in the 8218 and negative edge triggered in the 8219.

Signals Generated or Received by the Bus Master (Continued)		
Symbol	**Type**	**Name and Function**
$\overline{ADEN}$	O	**Address and Data Enable:** Address and Data Enable indicates the Master has control of the bus. It is often used to enable Address and Data Buffers on the bus. It is synchronous with Bus Clock.
RDD	O	**Read Data:** Read Data controls the direction of the bi-directional data bus drivers. It is asynchronous to the Bus Clock. A high on RDD indicates a read mode by the master.
OVRD	I	**Override:** Override inhibits automatic deselect between transfers caused by a higher priority bus request. May be used for consecutive data transfers such as read-modify-write operations. It is asynchronous to the Bus Clock.
XSTR	I	**Transfer Start Request:** Transfer Start Request indicates to the 8218/8219 that a new data transfer cycle is requested to start. It is raised for each new word transfer in a multiple data word transfer. It is asynchronous to the Bus Clock.
$\overline{XCP}$	I	**Transfer Complete:** Transfer Complete indicates to the 8218/8219 that the data has been received by the slave device in a write cycle or transmitted by the slave and received by master in a read cycle. It is asynchronous to the Bus Clock.
$\overline{XCY}$	O	**Data Transfer:** Indicates that a data transfer is in progress. It is asynchronous to the Bus Clock.
$\overline{WR}$, $\overline{RD}$, IO/$\overline{M}$	I	**Write, Read, IO/$\overline{Memory}$:** WRITE, READ, IO/Memory are the control request inputs used by the 8085 and are internally decoded by the 8219 to produce the request signals $\overline{MRDR}$, $\overline{MWTR}$, $\overline{IORR}$, $\overline{IOWR}$. They are asynchronous to the Bus Clock. (8219 only)
$\overline{ASRQ}$	I	**Asynchronous Bus Request:** Can be used for interrupt status from the 8085. Acts like a level sensitive asynchronous bus request—no RSTB needed. It is asynchronous to the Bus Clock. (8219 only)
$\overline{MRDR}$, $\overline{MWTR}$, $\overline{IORR}$, $\overline{IOWR}$	I	**Memory Read Request, Memory Write Request, I/O Read Request, or I/O Write Request:** Indicate that address and data have been placed on the bus and the appropriate request is being made to the addressed device. Only one of these inputs should be active at any one time. They are synchronous to the Bus Clock. (8218 only)
ANYR	O	**Any Request:** Any Request is the logical OR of the active state of $\overline{MRDR}$, $\overline{MWTR}$, $\overline{IORR}$, $\overline{IOWR}$. It may be tied to XSTR when the rising edge of ANYR is used to initiate a transfer.
DLYADJ	I	**Delay Adjust:** Delay Adjust is used for connection of an external capacitor and resistor to ground to adjust the required set-up and hold time of address to control signal.

FUNCTIONAL DESCRIPTION

The 8218/8219 is a bipolar Bus Control Chip which reduces component count in the interface between a master device and the system Bus. (Master device: 8080, 8085, 8257 (DMA).)

The 8218 and 8219 serve three major functions:

1. Resolve bus contention.
2. Guarantee set-up and hold time of address/data lines to I/O and Memory read/write control signals (adjustable by external capacitor).
3. Provide sufficient drive on all bus command lines.

Bus Arbitration Logic

Bus Arbitration Logic activity begins when the Master makes a request for use of the bus on BCR1 or $\overline{BCR2}$. The request is strobed in by $\overline{RSTB}$. Following the next two falling edges of the bus clock (BCLK) the 8218/8219 outputs a bus request ($\overline{BREQ}$) and forces Bus Priority Out inactive (BPRO). See Figures 1a and 1b.

$\overline{BREQ}$ is used for requesting the bus when priority is decided by a parallel priority resolver circuit.

$\overline{BPRO}$ is used to allow lower priority devices to gain the bus when a serial priority resolving structure is used. $\overline{BPRO}$ would go to $\overline{BPRN}$ of the next lower priority Master.

When priority is granted to the Master (a low on $\overline{BPRN}$ and a high on $\overline{BUSY}$) the Master outputs a $\overline{BUSY}$ signal on the next falling edge of $\overline{BCLK}$. The $\overline{BUSY}$ signal locks the master onto the bus and prohibits the enable of any other masters onto the bus.

At the same time $\overline{BUSY}$ goes active, Address and Data Enable ($\overline{ADEN}$) goes active signifying that the Master has control of the bus. $\overline{ADEN}$ is often used to enable the bus drivers.

The Bus will be released only if the master loses priority; is not in the middle of a transfer, and Override is not active or, if the Master stops requesting the bus, is not in the middle of a data transfer, and Override is not active. $\overline{ADEN}$ then goes inactive.

Provision has been made in the 8218 to allow bus-synchronous requests. This mode is activated when BCR1, $\overline{BCR2}$ and $\overline{RSTB}$ are all low. This action asynchronously sets the synchronization flip flop (FF2) in Figure 3a.

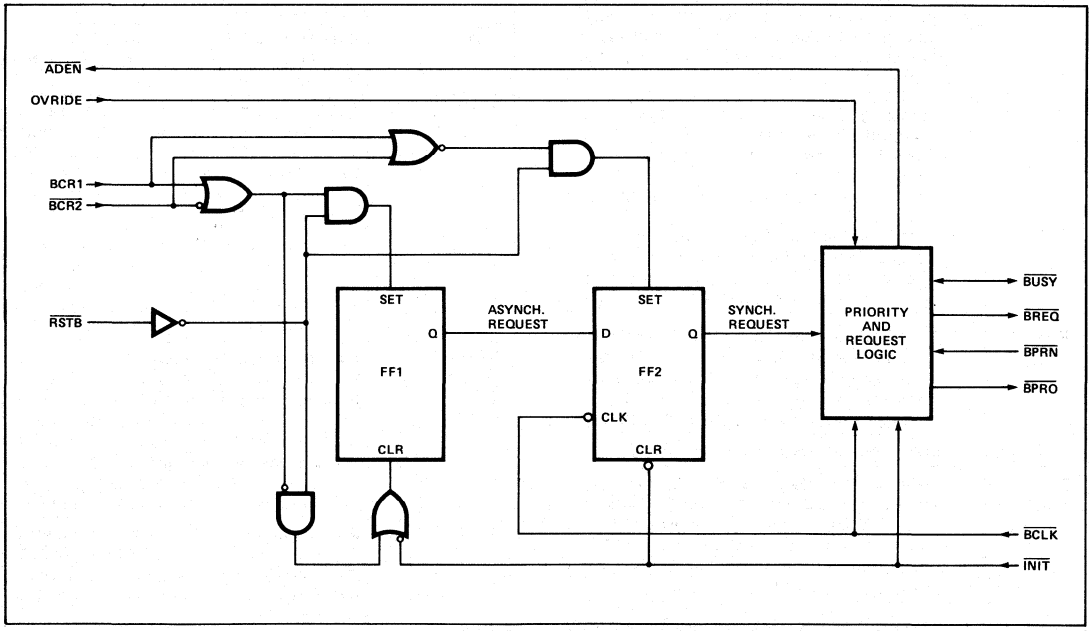

Figure 3a. 8218 Bus Arbitration Logic

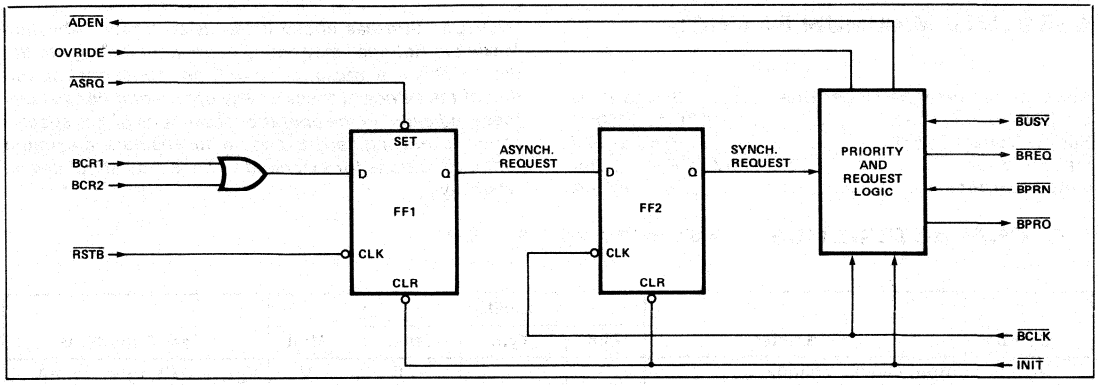

Figure 3b. 8219 Bus Arbitration Logic

Timing Logic

Timing Logic activity begins with the rising edge of XSTR (Transfer Start Request) or with $\overline{ADEN}$ going active, whichever occurs second. This action causes $\overline{XCY}$ (Transfer Cycle) to go active. 50-200ns later (depending on resistance and capacitance at DLYADJ) the appropriate Control Outputs will go active if the control input is active.

XSTR can be raised after the command goes active in the current transfer cycle so that a new transfer can be initiated immediately after the current transfer is complete.

A negative going edge on $\overline{XCP}$ (Transfer Complete) will cause the Control Outputs ($\overline{MRDC}$, etc.) to go inactive. 50-200ns later (depending on capacitance at DLYADJ) $\overline{XCY}$ will go inactive indicating the transfer cycle is completed.

Additional logic within the 8218/8219 guarantees that if a transfer cycle is started ($\overline{XCY}$ is active), but the bus is not requested ($\overline{BREQ}$ is inactive) and there is no command request input (ANYR is output low), then the transfer cycle will be cleared. This allows the bus to be released in applications where advanced bus requests are generated but the processor enters a HALT mode.

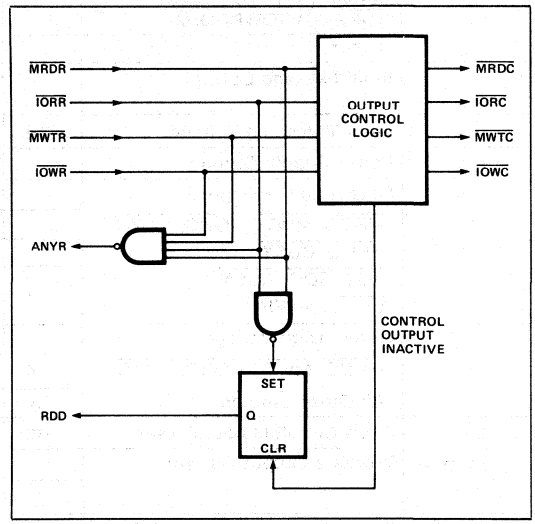

Figure 4a. 8218 Control Logic

Control Logic

The control outputs are generated in the 8219 by decoding the 8085 system control outputs (i.e., RD, WR, IO/$\overline{M}$) or in the 8218 by directly buffering the control inputs to the control outputs for use in an 8080 or DMA system (see Figures 4a and 4b). The control outputs may be held high (inactive) by the Timing Logic. Also the control outputs are enabled when the Master gains control of the bus and disabled when control is relinquished.

The Control Logic also has two other outputs, ANYR (Any Request) and RDD (Read Data). ANYR goes high (active) if any control requests (IOWR, etc.) are active. RDD controls the direction of the Masters Bi-directional Data Bus Drivers. The Bus Driver will always be in the Write mode (RDD = Low) except from the start of a Read Control Request to 25 to 70ns after $\overline{XCP}$ is activated.

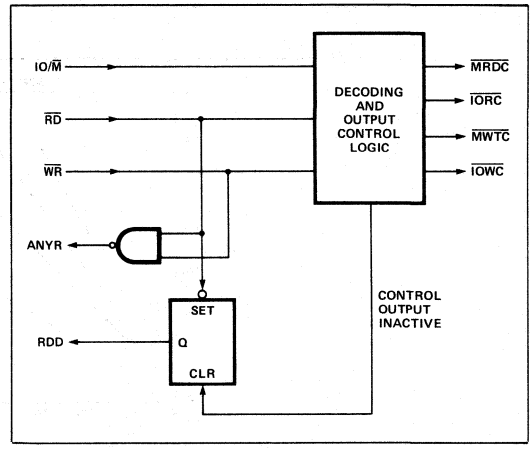

Figure 4b. 8219 Control Logic

ABSOLUTE MAXIMUM RATINGS*

Ambient Temperature Under Bias ..... 0°C to 70°C
Storage Temperature ..... -65°C to +150°C
Supply Voltage (V_{CC}) ..... -0.5V to +7V
Input Voltage ..... -1.0V to V_{CC} + 0.25V
Output Current 100mA

**NOTICE: Stresses above those listed under "Absolute Maximum Ratings" may cause permanent damage to the device. This is a stress rating only and functional operation of the device at these or any other conditions above those indicated in the operational sections of this specification is not implied. Exposure to absolute maximum rating conditions for extended periods may affect device reliability.*

D.C. CHARACTERISTICS (T_A = 0°C to 70°C; V_{CC} = 5V ± 5%)

Symbol	Parameter	Limits			Unit	Test Conditions
		Min.	Typ.	Max.		
V_C	Input Clamp Voltage			-1.0	V	V_{CC} = 0.0V, I_C = −5 mA
I_F	Input Load Current $\overline{MRDR}/\overline{INTA}/MWTR/\overline{WR}$ $\overline{IORR}/\overline{RD}$, IOWR/IO/$\overline{M}$			-0.5	mA	V_{CC} = 5.25V V_F = 0.45V
	Other			-0.5	mA	
I_R	Input Leakage Current			100	μA	V_{CC} = 5.25 V_R = 5.25
V_{TH}	Input Threshold Voltage	0.8		2.0	V	V_{CC} = 5V
I_{CC}	Power Supply Current		200	240	mA	V_{CC} = 5.25V
V_{OL}	Output Low Voltage					V_{CC} = 4.75
	$\overline{MRDC}$, $\overline{MWTC}$, $\overline{IORC}$, $\overline{IOWC}$			0.45	V	I_{OL} = 32mA
	$\overline{BREQ}$, $\overline{BUSY}$			0.45	V	I_{OL} = 20mA
	$\overline{XCY}$, $\overline{RDD}$, $\overline{ADEN}$			0.45	V	I_{OL} = 16mA
	$\overline{BPRO}$, ANYR			0.45	V	I_{OL} = 3.2mA
V_{OH}	Output High Voltage					V_{CC} = 4.75V
	$\overline{MRDC}$, $\overline{MWTC}$, $\overline{IORC}$, $\overline{IOWC}$	2.4				I_{OH} = -2mA
	All Other Outputs	2.4				I_{OH} = -400μA
I_{OS}	Short Circuit Output Current	-10		-90	mA	V_{CC} = 5.25V, V_O = 0V
$I_{O\ (OFF)}$	Tri-State Output Current			-100	μA	V_{CC} = 5.25V, V_O = 0.45V
				+100	μA	V_{CC} = 5.25V, V_O = 5.25V
C_{IN}	Input Capacitance Except Busy		10	20	pF	
C_{IO}	Input Capacitance Busy		25	35	pF	

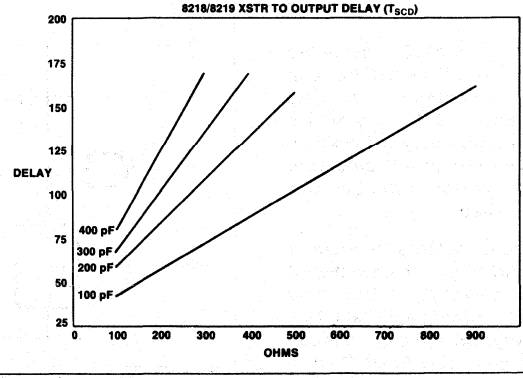

One Shot Delay Versus Delay Adjust Capacitance And Resistance

A.C. CHARACTERISTICS (T_A = 0°C to 70°C; V_{CC} = 5V ± 5%)

Symbol	Parameter	Limits			Unit	Test Conditions
		Min.	Typ.	Max.		
t_{BCY}	Bus Clock Cycle Time	100			ns	35% to 65% Duty Cycle
t_{PW}	Bus Clock Pulse Width	35		0.65 t_{BCY}	ns	
t_{RQS}	$\overline{RSTB}$ to $\overline{BCLK}$ Set-Up Time	25			ns	
t_{CSS}	BCR_1 and $\overline{BCR_2}$ to $\overline{RSTB}$ Set-Up Time	15			ns	
t_{CSH}	BCR_1 and $\overline{BCR_2}$ to $\overline{RSTB}$ Hold Time	15			ns	
t_{RQD}	$\overline{BCLK}$ to $\overline{BREQ}$ Delay			35	ns	
t_{PRNS}	$\overline{BPRN}$ to $\overline{BCLK}$ Set-Up Time	23			ns	
t_{BNO}	$\overline{BRPN}$ to $\overline{BPRO}$ Delay			30	ns	
t_{BYD}	$\overline{BCLK}$ to $\overline{BUSY}$ Delay			55	ns	
t_{CAD}	$\overline{MRDR}$, $\overline{MWTR}$, $\overline{IORR}$, $\overline{IOWR}$ to ANYR Delay			30	ns	
t_{SXD}	XSTR to $\overline{XCY}$ Delay			40	ns	
t_{SCD}	XSTR to $\overline{MRDC}$, $\overline{MWTC}$, $\overline{IORC}$, $\overline{IOWC}$ Delay	50		200	ns	Adjustable by External R/C
t_{XSW}	XSTR Pulse Width	30			ns	
t_{XCD}	$\overline{XCP}$ to $\overline{MRDC}$, $\overline{MWTC}$, $\overline{IORC}$, $\overline{IOWC}$ Delay			50	ns	
t_{XCW}	$\overline{XCP}$ Pulse Width	35			ns	
t_{CCD}	$\overline{XCP}$ to $\overline{XCY}$ Delay	50		200	ns	Adjustable by External R/C
t_{CMD}	$\overline{MRDR}$, $\overline{MWTR}$, $\overline{IORR}$, $\overline{IOWR}$ to $\overline{MRDC}$, $\overline{MWTC}$, $\overline{IORC}$, $\overline{IOWC}$			35	ns	
t_{CRD}	$\overline{MRDR}$, $\overline{MWTR}$, $\overline{IORR}$, $\overline{IOWR}$ to RDD Delay			25	ns	
t_{RW}	$\overline{RSTB}$ Min. Neg. Pulse Width	30			ns	
t_{CPD}	$\overline{BCLK}$ to $\overline{BPRO}$ Delay			40	ns	
t_{XRD}	$\overline{XCP}$ to $\overline{RDD}$ Delay	25		70	ns	

A.C. TESTING INPUT, OUTPUT WAVEFORM

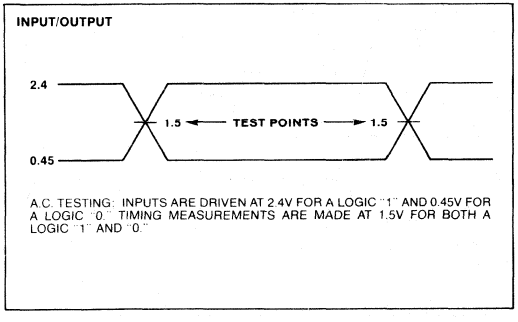

A.C. TESTING LOAD CIRCUIT

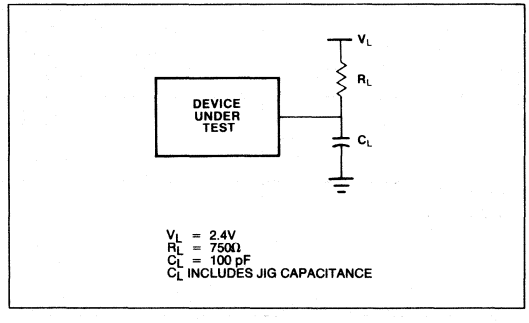

WAVEFORMS

SYNCHRONOUS BUS TIMING (System Bus Previously Not In Use)

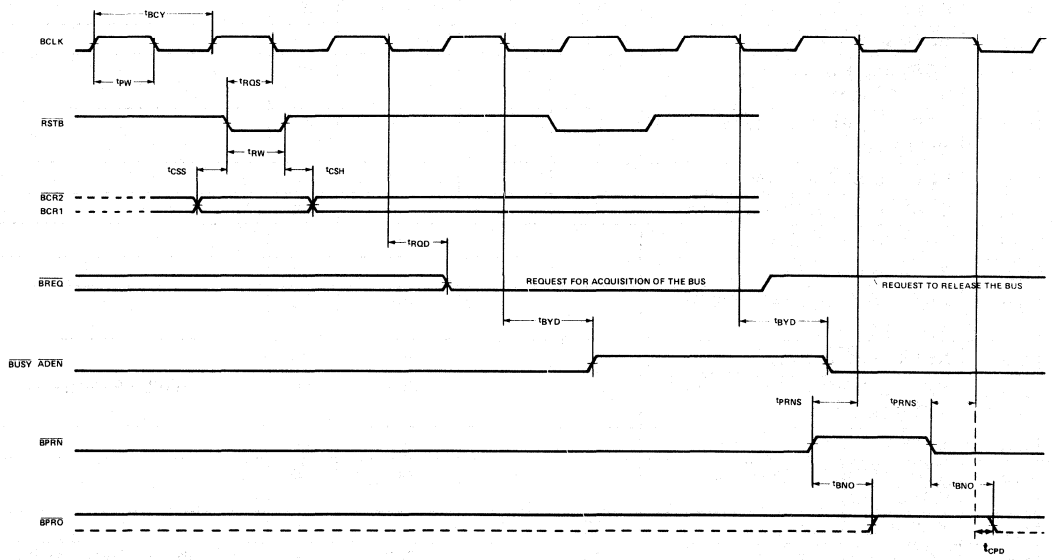

CONTROL CYCLE (System Bus Previously Not In Use)

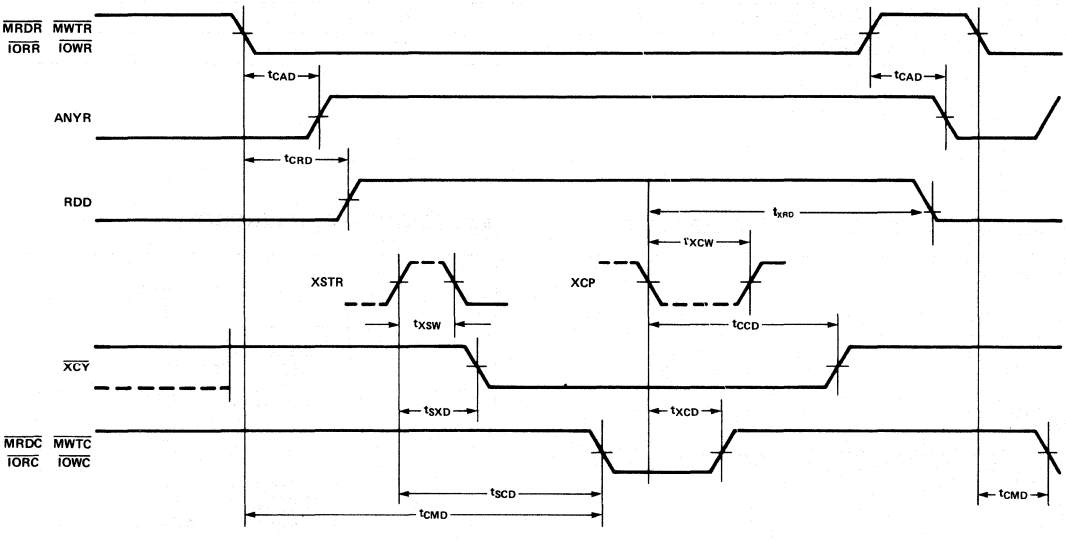

WAVEFORMS (Continued)

BUS CONTROL EXCHANGE (Master No. 1 Leaving Bus And Master No. 2 Getting On Bus)

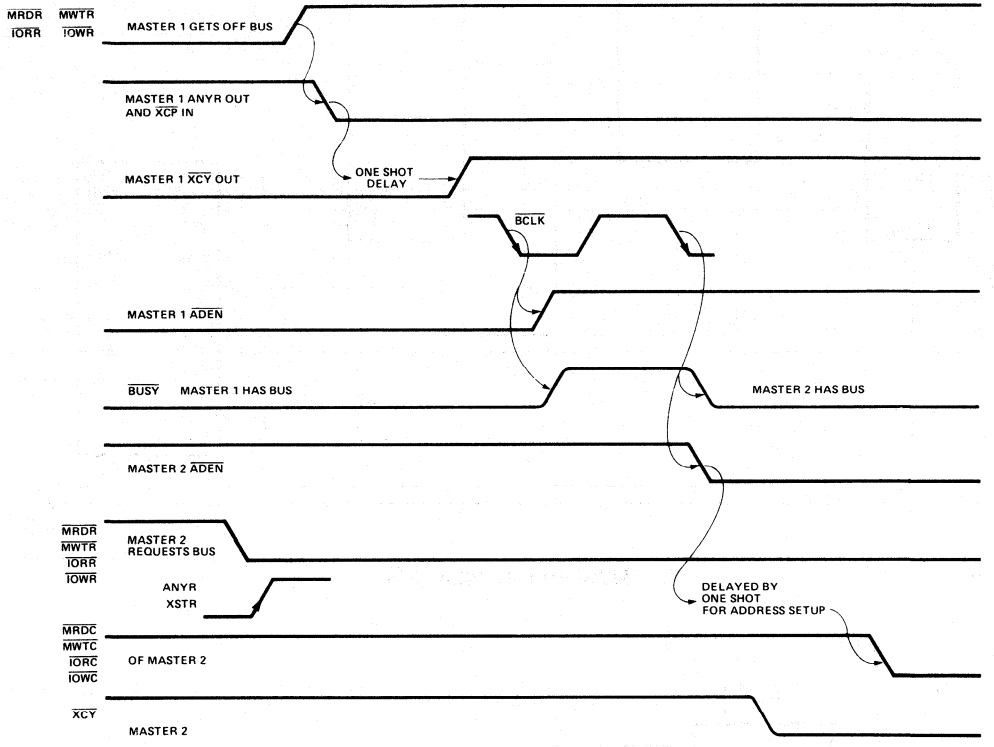

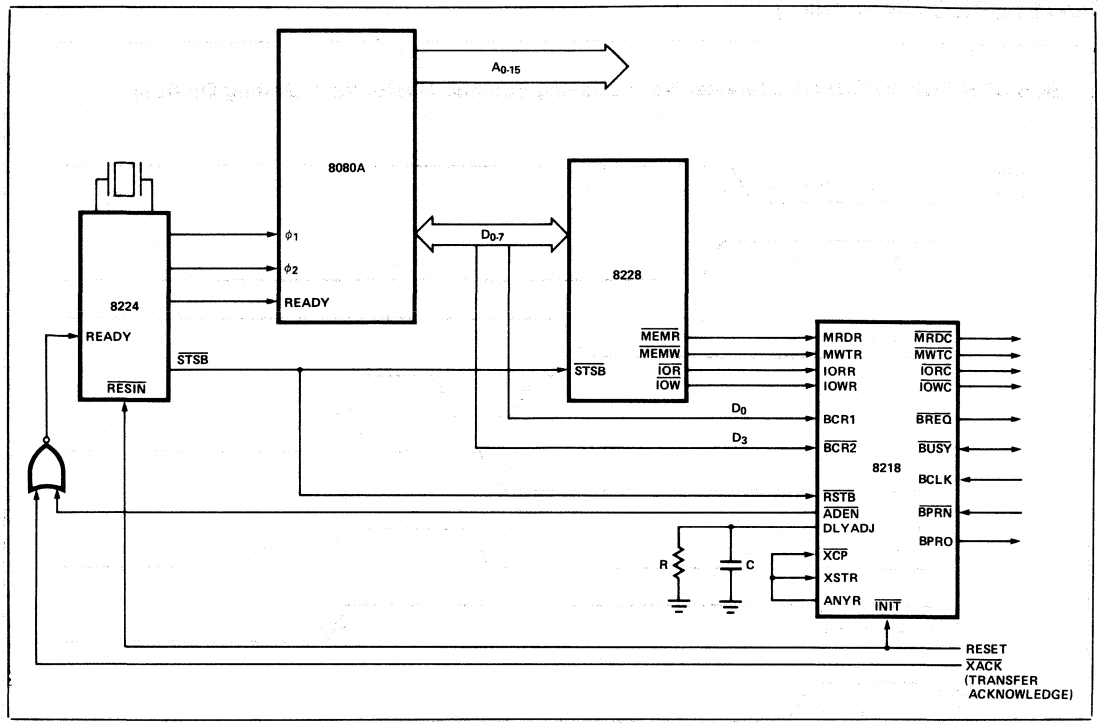

MCS-80® CPU With 8218

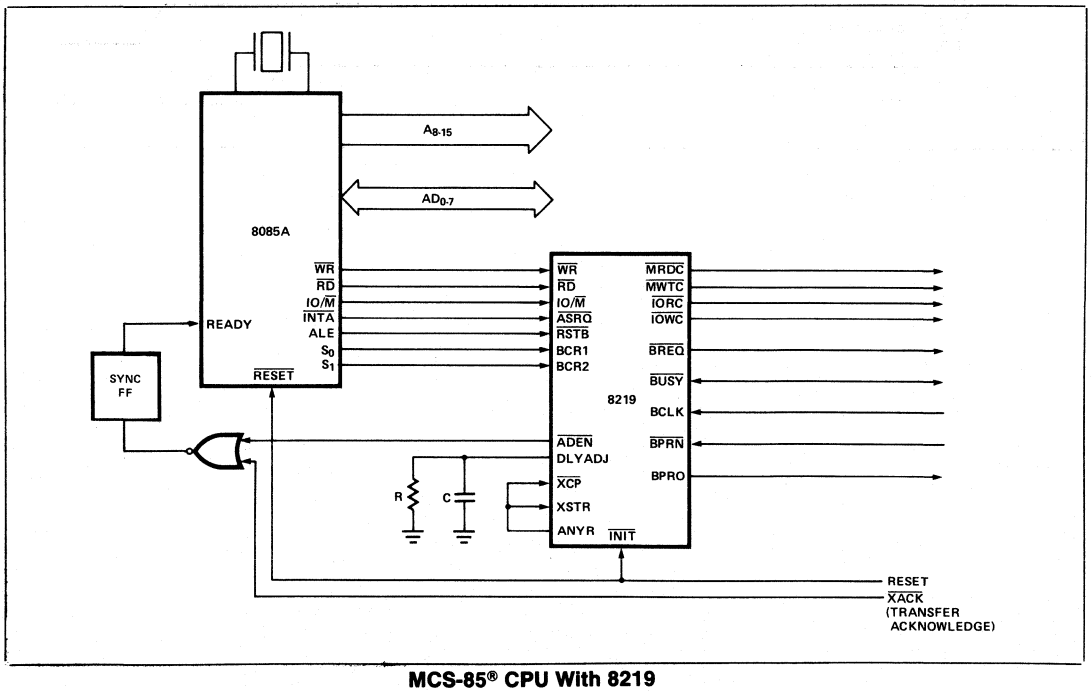

MCS-85® CPU With 8219

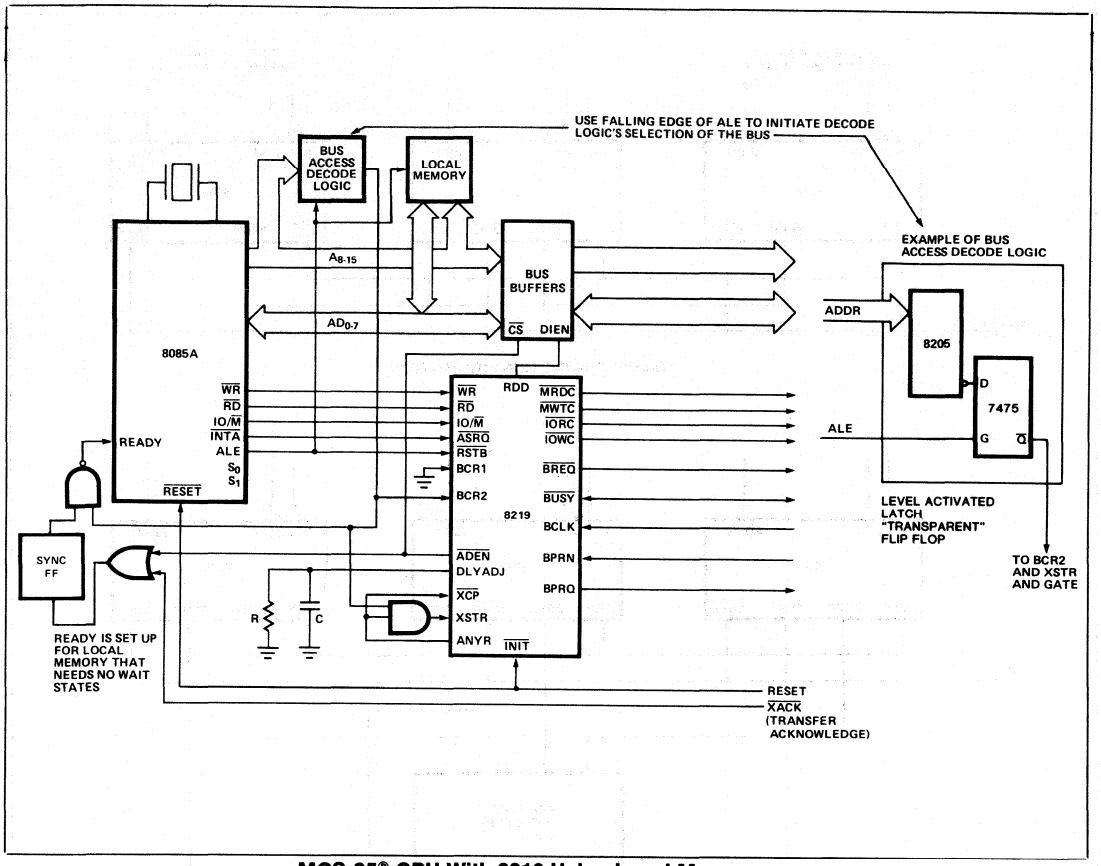

MCS-85® CPU With 8219 Using Local Memory

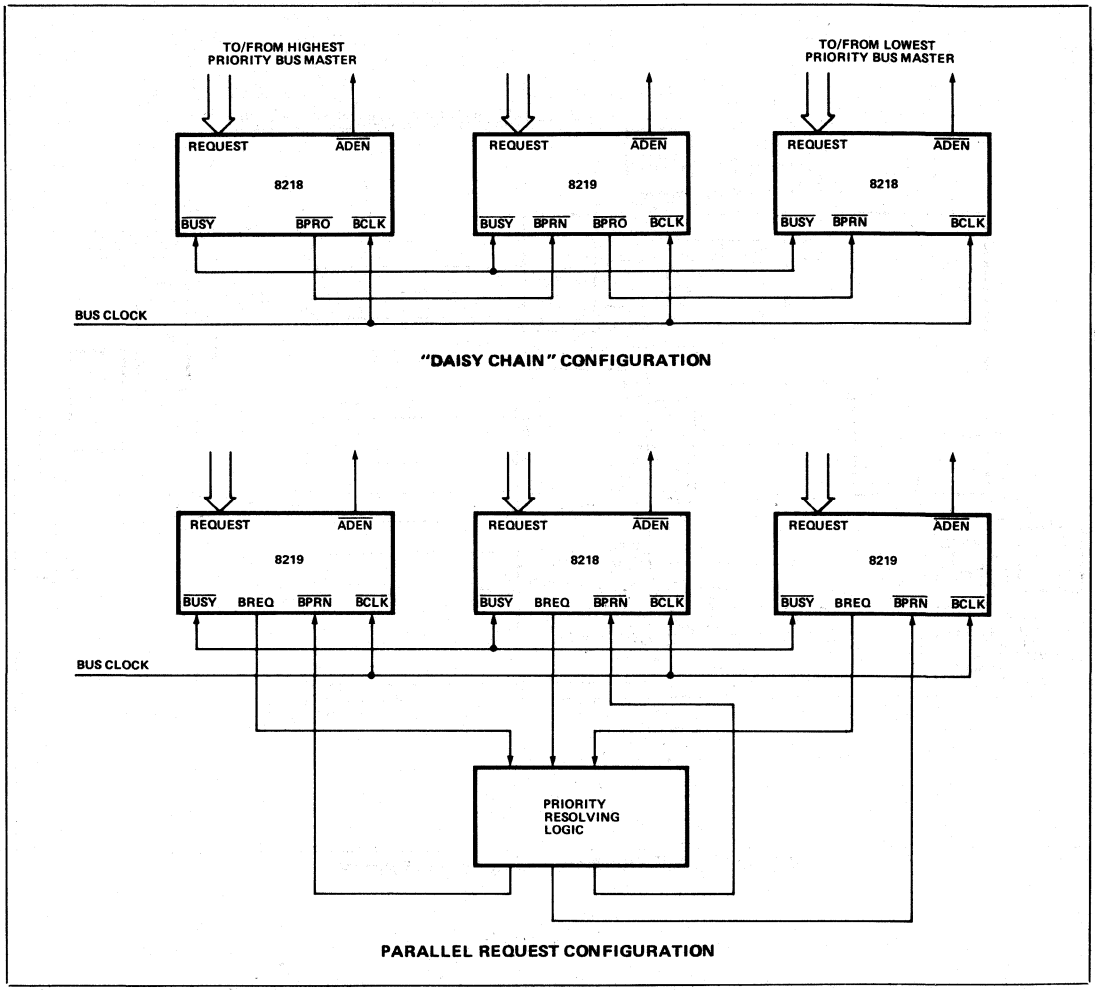

Two Methods of Connecting Multiple 8218/8219's To Resolve Bus Contention Among Multiple Masters

8224
CLOCK GENERATOR AND DRIVER FOR 8080A CPU

- **Single Chip Clock Generator/Driver for 8080A CPU**
- **Power-Up Reset for CPU**
- **Ready Synchronizing Flip-Flop**
- **Advanced Status Strobe**
- **Oscillator Output for External System Timing**
- **Crystal Controlled for Stable System Operation**
- **Reduces System Package Count**

The Intel® 8224 is a single chip clock generator/driver for the 8080A CPU. It is controlled by a crystal, selected by the designer to meet a variety of system speed requirements.

Also included are circuits to provide power-up reset, advance status strobe, and synchronization of ready.

The 8224 provides the designer with a significant reduction of packages used to generate clocks and timing for 8080A.

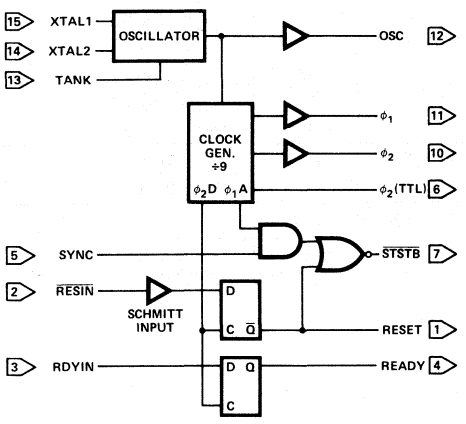

Figure 1. Block Diagram

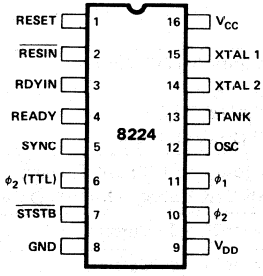

Figure 2. Pin Configuration

RESIN	RESET INPUT
RESET	RESET OUTPUT
RDYIN	READY INPUT
READY	READY OUTPUT
SYNC	SYNC INPUT
STSTB	STATUS STB (ACTIVE LOW)
ϕ_1	8080 CLOCKS
ϕ_2	

XTAL 1	CONNECTIONS FOR CRYSTAL
XTAL 2	
TANK	USED WITH OVERTONE XTAL
OSC	OSCILLATOR OUTPUT
ϕ_2 (TTL)	ϕ_2 CLK (TTL LEVEL)
V_{CC}	+5V
V_{DD}	+12V
GND	0V

ABSOLUTE MAXIMUM RATINGS*

Temperature Under Bias . . . . . 0°C to 70°C
Storage Temperature . . . . . −65°C to 150°C
Supply Voltage, V_{CC} . . . . . −0.5V to +7V
Supply Voltage, V_{DD} . . . . . −0.5V to +13.5V
Input Voltage . . . . . −1.5V to +7V
Output Current 100mA

**NOTICE: Stresses above those listed under "Absolute Maximum Ratings" may cause permanent damage to the device. This is a stress rating only and functional operation of the device at these or any other conditions above those indicated in the operational sections of this specification is not implied. Exposure to absolute maximum rating conditions for extended periods may affect device reliability.*

D.C. CHARACTERISTICS (T_A = 0°C to 70°C, V_{CC} = +5.0V ±5%, V_{DD} = +12V ±5%)

Symbol	Parameter	Limits Min.	Limits Typ.	Limits Max.	Units	Test Conditions
I_F	Input Current Loading			-.25	mA	V_F = .45V
I_R	Input Leakage Current			10	μA	V_R = 5.25V
V_C	Input Forward Clamp Voltage			1.0	V	I_C = -5mA
V_{IL}	Input "Low" Voltage			.8	V	V_{CC} = 5.0V
V_{IH}	Input "High" Voltage	2.6 2.0			V	Reset Input All Other Inputs
V_{IH}-V_{IL}	RESIN Input Hysteresis	.25			V	V_{CC} = 5.0V
V_{OL}	Output "Low" Voltage			.45 .45	V V	(ϕ_1,ϕ_2), Ready, Reset, $\overline{STSTB}$ I_{OL} =2.5mA All Other Outputs I_{OL} = 15mA
V_{OH}	Output "High" Voltage ϕ_1 , ϕ_2 READY, RESET All Other Outputs	 9.4 3.6 2.4			 V V V	 I_{OH} = -100μA I_{OH} = -100μA I_{OH} = -1mA
I_{SC}[1]	Output Short Circuit Current (All Low Voltage Outputs Only)	-10		-60	mA	V_O = 0V V_{CC} = 5.0V
I_{CC}	Power Supply Current			115	mA	
I_{DD}	Power Supply Current			12	mA	

Note: 1. Caution, ϕ_1 and ϕ_2 output drivers do not have short circuit protection

Crystal Requirements

Tolerance: 0.005% at 0°C-70°C
Resonance: Series (Fundamental)*
Load Capacitance: 20-35 pF
Equivalent Resistance: 75-20 ohms
Power Dissipation (Min): 4 mW

*With tank circuit use 3rd overtone mode.

A.C. CHARACTERISTICS (V_{CC} = +5.0V ±5%, V_{DD} = +12.0V ±5%, T_A = 0°C to 70°C)

Symbol	Parameter	Limits			Units	Test Conditions
		Min.	Typ.	Max.		
$t_{\phi 1}$	ϕ_1 Pulse Width	$\frac{2tcy}{9}$ - 20ns			ns	C_L = 20pF to 50pF
$t_{\phi 2}$	ϕ_2 Pulse Width	$\frac{5tcy}{9}$ - 35ns				
t_{D1}	ϕ_1 to ϕ_2 Delay	0				
t_{D2}	ϕ_2 to ϕ_1 Delay	$\frac{2tcy}{9}$ - 14ns				
t_{D3}	ϕ_1 to ϕ_2 Delay	$\frac{2tcy}{9}$		$\frac{2tcy}{9}$ + 20ns		
t_R	ϕ_1 and ϕ_2 Rise Time			20		
t_F	ϕ_1 and ϕ_2 Fall Time			20		
$t_{D\phi 2}$	ϕ_2 to ϕ_2 (TTL) Delay	-5		+15	ns	ϕ_2TTL,CL=30 R_1=300Ω R_2=600Ω
t_{DSS}	ϕ_2 to $\overline{STSTB}$ Delay	$\frac{6tcy}{9}$ - 30ns		$\frac{6tcy}{9}$		$\overline{STSTB}$, CL=15pF R_1 = 2K R_2 = 4K
t_{PW}	$\overline{STSTB}$ Pulse Width	$\frac{tcy}{9}$ - 15ns				
t_{DRS}	RDYIN Setup Time to Status Strobe	50ns - $\frac{4tcy}{9}$				
t_{DRH}	RDYIN Hold Time After $\overline{STSTB}$	$\frac{4tcy}{9}$				
t_{DR}	RDYIN or RESIN to ϕ_2 Delay	$\frac{4tcy}{9}$ - 25ns				Ready & Reset CL=10pF R_1=2K R_2=4K
t_{CLK}	CLK Period		$\frac{tcy}{9}$			
f_{max}	Maximum Oscillating Frequency			27	MHz	
C_{in}	Input Capacitance			8	pF	V_{CC}=+5.0V V_{DD}=+12V V_{BIAS}=2.5V f=1MHz

A.C. CHARACTERISTICS (Continued)

(For t_{CY} = 488.28 ns) (T_A = 0°C to 70°C, V_{DD} = +5V ±5%, V_{DD} = +12V ±5%)

Symbol	Parameter	Limits Min.	Typ.	Max.	Units	Test Conditions
$t_{\phi 1}$	ϕ_1 Pulse Width	89			ns	t_{CY}=488.28ns
$t_{\phi 2}$	ϕ_2 Pulse Width	236			ns	
t_{D1}	Delay ϕ_1 to ϕ_2	0			ns	
t_{D2}	Delay ϕ_2 to ϕ_1	95			ns	ϕ_1 & ϕ_2 Loaded to C_L = 20 to 50pF
t_{D3}	Delay ϕ_1 to ϕ_2 Leading Edges	109		129	ns	
t_r	Output Rise Time			20	ns	
t_f	Output Fall Time			20	ns	
t_{DSS}	ϕ_2 to $\overline{STSTB}$ Delay	296		326	ns	
$t_{D\phi 2}$	ϕ_2 to ϕ_2 (TTL) Delay	-5		+15	ns	
t_{PW}	Status Strobe Pulse Width	40			ns	Ready & Reset Loaded to 2mA/10pF
t_{DRS}	RDYIN Setup Time to $\overline{STSTB}$	-167			ns	
t_{DRH}	RDYIN Hold Time after $\overline{STSTB}$	217			ns	All measurements referenced to 1.5V unless specified otherwise.
t_{DR}	READY or RESET to ϕ_2 Delay	192			ns	
f_{MAX}	Oscillator Frequency			18.432	MHz	

A.C. TESTING INPUT, OUTPUT WAVEFORM

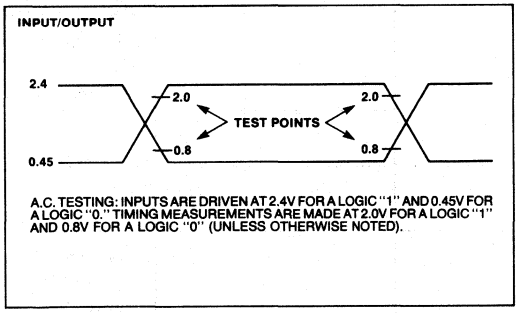

A.C. TESTING: INPUTS ARE DRIVEN AT 2.4V FOR A LOGIC "1" AND 0.45V FOR A LOGIC "0." TIMING MEASUREMENTS ARE MADE AT 2.0V FOR A LOGIC "1" AND 0.8V FOR A LOGIC "0" (UNLESS OTHERWISE NOTED).

A.C. TESTING LOAD CIRCUIT

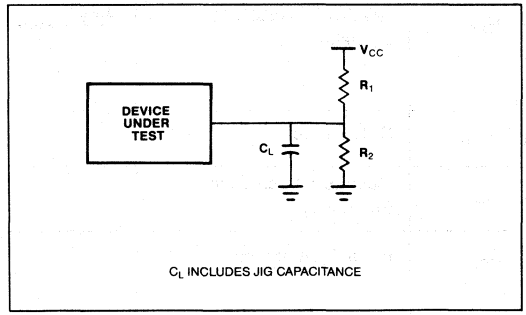

C_L INCLUDES JIG CAPACITANCE

WAVEFORMS

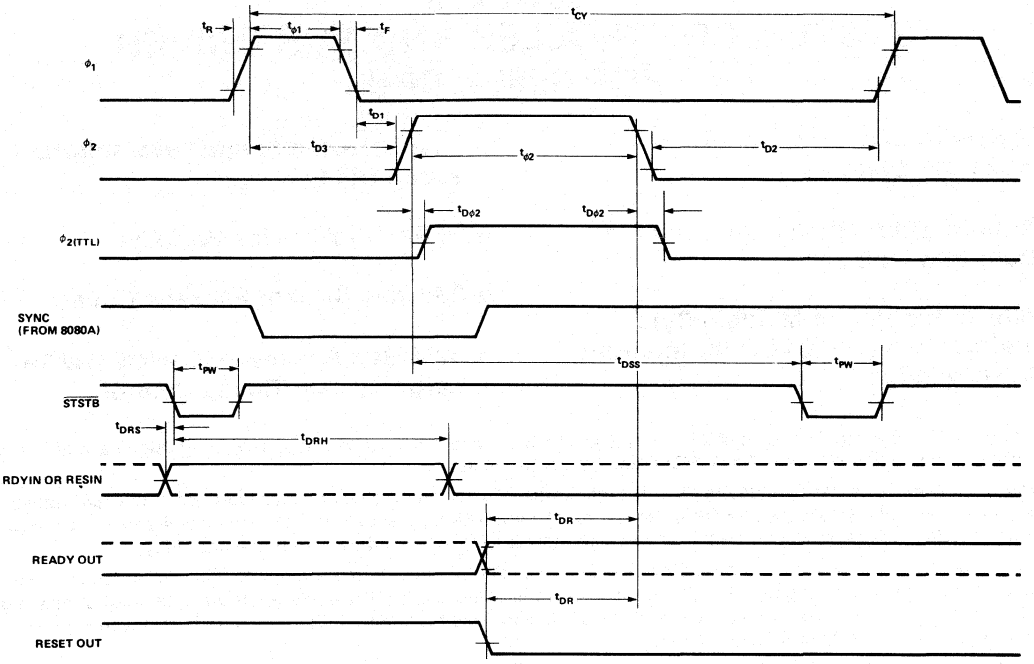

VOLTAGE MEASUREMENT POINTS: ϕ_1, ϕ_2 Logic "0" = 1.0V, Logic "1" = 8.0V. All other signals measured at 1.5V.

8228/8238
SYSTEM CONTROLLER AND BUS DRIVER FOR 8080A CPU

- **Single Chip System Control for MCS-80® Systems**
- **Built-In Bidirectional Bus Driver for Data Bus Isolation**
- **Allows the Use of Multiple Byte Instructions (e.g. CALL) for Interrupt Acknowledge**
- **User Selected Single Level Interrupt Vector (RST 7)**
- **28-Pin Dual In-Line Package**
- **Reduces System Package Count**
- **8238 Had Advanced IOW/MEMW for Large System Timing Control**

The Intel® 8228 is a single chip system controller and bus driver for MCS-80. It generates all signals required to directly interface MCS-80 family RAM, ROM, and I/O components.

A bidirectional bus driver is included to provide high system TTL fan-out. It also provides isolation of the 8080 data bus from memory and I/O. This allows for the optimization of control signals, enabling the systems designer to use slower memory and I/O. The isolation of the bus driver also provides for enhanced system noise immunity.

A user selected single level interrupt vector (RST 7) is provided to simplify real time, interrupt driven, small system requirements. The 8228 also generates the correct control signals to allow the use of multiple byte instructions (e.g., CALL) in response to an interrupt acknowledge by the 8080A. This feature permits large, interrupt driven systems to have an unlimited number of interrupt levels.

The 8228 is designed to support a wide variety of system bus structures and also reduce system package count for cost effective, reliable design of the MCS-80 systems.

Note: The specifications for the 3228/3238 are identical with those for the 8228/8238

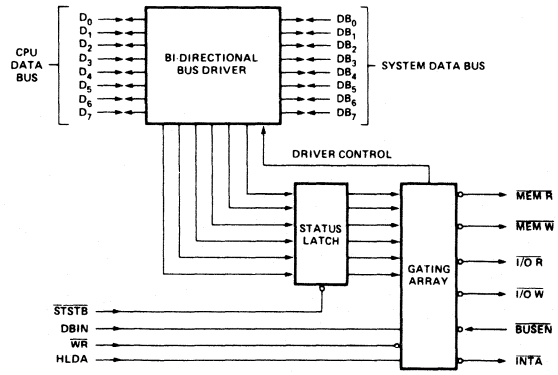

Figure 1. Block Diagram

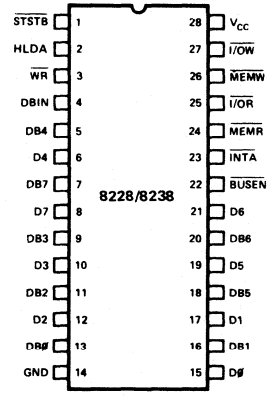

Figure 2. Pin Configuration

D7-D0	DATA BUS (8080 SIDE)
DB7-DB0	DATA BUS (SYSTEM SIDE)
$\overline{I/OR}$	I/O READ
$\overline{I/OW}$	I/O WRITE
$\overline{MEMR}$	MEMORY READ
$\overline{MEMW}$	MEMORY WRITE
DBIN	DBIN (FROM 8080)

INTA	INTERRUPT ACKNOWLEDGE
HLDA	HLDA (FROM 8080)
$\overline{WR}$	WR (FROM 8080)
$\overline{BUSEN}$	BUS ENABLE INPUT
$\overline{STSTB}$	STATUS STROBE (FROM 8224)
V_{CC}	+5V
GND	0 VOLTS

ABSOLUTE MAXIMUM RATINGS*

Temperature Under Bias ..... −0°C to 70°C
Storage Temperature ..... −65°C to 150°C
Supply Voltage, V_{CC} ..... −0.5V to +7V
Input Voltage ..... −1.5V to +7V
Output Current ..... 100 mA

**NOTICE: Stresses above those listed under "Absolute Maximum Ratings" may cause permanent damage to the device. This is a stress rating only and functional operation of the device at these or any other conditions above those indicated in the operational sections of this specification is not limited. Exposure to absolute maximum rating conditions for extended periods may affect device reliability.*

D.C. CHARACTERISTICS (T_A = 0°C to 70°C, V_{CC} = 5V ±5%)

Symbol	Parameter	Limits Min.	Typ.[1]	Max.	Unit	Test Conditions
V_C	Input Clamp Voltage, All Inputs		.75	-1.0	V	V_{CC}=4.75V; I_C=-5mA
I_F	Input Load Current, $\overline{STSTB}$			500	μA	V_{CC} = 5.25V
	D_2 & D_6			750	μA	V_F = 0.45V
	D_0, D_1, D_4, D_5, & D_7			250	μA	
	All Other Inputs			250	μA	
I_R	Input Leakage Current $\overline{STSTB}$			100	μA	V_{CC} = 5.25V
	DB_0-DB_7			20	μA	V_R = 5.25V
	All Other Inputs			100	μA	
V_{TH}	Input Threshold Voltage, All Inputs	0.8		2.0	V	V_{CC} = 5V
I_{CC}	Power Supply Current		140	190	mA	V_{CC}=5.25V
V_{OL}	Output Low Voltage, D_0-D_7			.45	V	V_{CC}=4.75V; I_{OL}=2mA
	All Other Outputs			.45	V	I_{OL} = 10mA
V_{OH}	Output High Voltage, D_0-D_7	3.6	3.8		V	V_{CC}=4.75V; I_{OH}=-10μA
	All Other Outputs	2.4			V	I_{OH} = -1mA
I_{OS}	Short Circuit Current, All Outputs	15		90	mA	V_{CC}=5V
$I_{O(off)}$	Off State Output Current, All Control Outputs			100	μA	V_{CC}=5.25V; V_O=5.25
				-100	μA	V_O=.45V
I_{INT}	INTA Current			5	mA	(See INTA Test Circuit)

Note 1: Typical values are for T_A = 25°C and nominal supply voltages.

CAPACITANCE (V_{BIAS} = 2.5V, V_{CC} = 5.0V, T_A = 25°C, f = 1 MHz)

This parameter is periodically sampled and not 100% tested.

Symbol	Parameter	Limits Min.	Typ.[1]	Max.	Unit
C_{IN}	Input Capacitance		8	12	pF
C_{OUT}	Output Capacitance Control Signals		7	15	pF
I/O	I/O Capacitance (D or DB)		8	15	pF

A.C. CHARACTERISTICS (T_A = 0°C to 70°C, V_{CC} = 5V ±5%)

Symbol	Parameter	Limits Min.	Max.	Units	Condition
t_{PW}	Width of Status Strobe	22		ns	
t_{SS}	Setup Time, Status Inputs D_0-D_7	8		ns	
t_{SH}	Hold Time, Status Inputs D_0-D_7	5		ns	
t_{DC}	Delay from $\overline{STSTB}$ to any Control Signal	20	60	ns	C_L = 100pF
t_{RR}	Delay from DBIN to Control Outputs		30	ns	C_L = 100pF
t_{RE}	Delay from DBIN to Enable/Disable 8080 Bus		45	ns	C_L = 25pF
t_{RD}	Delay from System Bus to 8080 Bus during Read		30	ns	C_L = 25pF
t_{WR}	Delay from $\overline{WR}$ to Control Outputs	5	45	ns	C_L = 100pF
t_{WE}	Delay to Enable System Bus DB_0-DB_7 after $\overline{STSTB}$		30	ns	C_L = 100pF
t_{WD}	Delay from 8080 Bus D_0-D_7 to System Bus DB_0-DB_7 during Write	5	40	ns	C_L = 100pF
t_E	Delay from $\overline{System\ Bus\ Enable}$ to System Bus DB_0-DB_7		30	ns	C_L = 100pF
t_{HD}	HLDA to Read Status Outputs		25	ns	
t_{DS}	Setup Time, System Bus Inputs to HLDA	10		ns	
t_{DH}	Hold Time, System Bus Inputs to HLDA	20		ns	C_L = 100pF

A.C. TESTING LOAD CIRCUIT

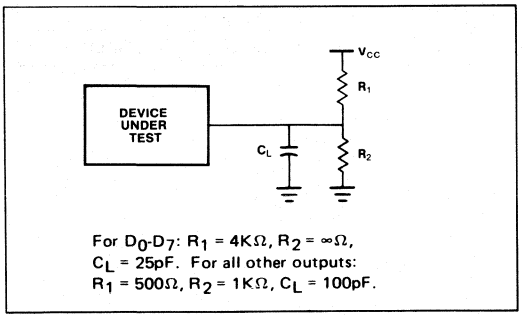

For D_0-D_7: R_1 = 4KΩ, R_2 = ∞Ω, C_L = 25pF. For all other outputs: R_1 = 500Ω, R_2 = 1KΩ, C_L = 100pF.

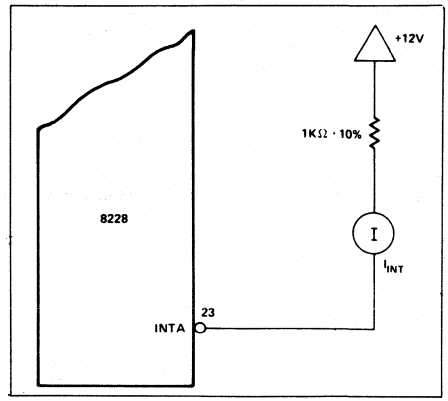

INTA Test Circuit (for RST 7)

WAVEFORM

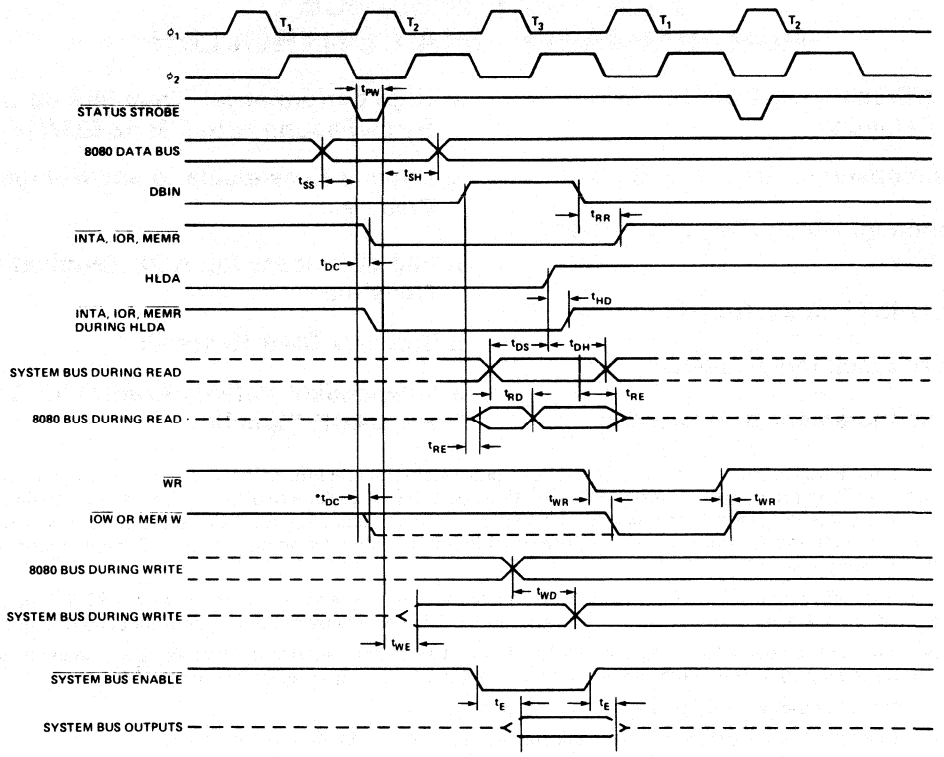

VOLTAGE MEASUREMENT POINTS: D_0-D_7 (when outputs) Logic "0" = 0.8V, Logic "1" = 3.0V. All other signals measured at 1.5V.

*ADVANCED $\overline{IOW}$/$\overline{MEMW}$ FOR 8238 ONLY.

8237A/8237A-4/8237A-5
HIGH PERFORMANCE PROGRAMMABLE DMA CONTROLLER

- **Enable/Disable Control of Individual DMA Requests**
- **Four Independent DMA Channels**
- **Independent Autoinitialization of all Channels**
- **Memory-to-Memory Transfers**
- **Memory Block Initialization**
- **Address Increment or Decrement**
- **High performance: Transfers up to 1.6M Bytes/Second with 5 MHz 8237A-5**
- **Directly Expandable to any Number of Channels**
- **End of Process Input for Terminating Transfers**
- **Software DMA Requests**
- **Independent Polarity Control for DREQ and DACK Signals**

The 8237A Multimode Direct Memory Access (DMA) Controller is a peripheral interface circuit for microprocessor systems. It is designed to improve system performance by allowing external devices to directly transfer information from the system memory. Memory-to-memory transfer capability is also provided. The 8237A offers a wide variety of programmable control features to enhance data throughput and system optimization and to allow dynamic reconfiguration under program control.

The 8237A is designed to be used in conjunction with an external 8-bit address register such as the 8282. It contains four independent channels and may be expanded to any number of channels by cascading additional controller chips.

The three basic transfer modes allow programmability of the types of DMA service by the user. Each channel can be individually programmed to Autoinitialize to its original condition following an End of Process ($\overline{EOP}$).

Each channel has a full 64K address and word count capability.

The 8237A-4 and 8237A-5 are 4 MHz and 5 MHz selected versions of the standard 3 MHz 8237A respectively.

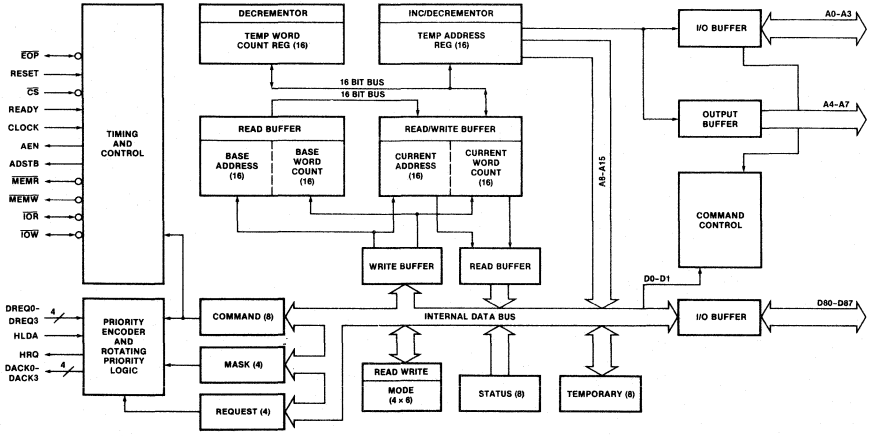

Figure 1. Block Diagram

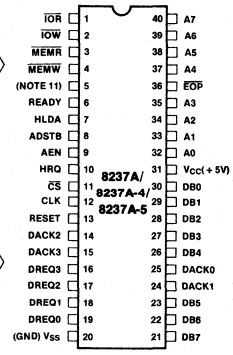

Figure 2. Pin Configuration

Table 1. Pin Description

Symbol	Type	Name and Function
V_{CC}		**Power:** +5 volt supply.
V_{SS}		**Ground:** Ground.
CLK	I	**Clock Input:** Clock Input controls the internal operations of the 8237A and its rate of data transfers. The input may be driven at up to 3 MHz for the standard 8237A and up to 5 MHz for the 8237A-5.
CS	I	**Chip Select:** Chip Select is an active low input used to select the 8237A as an I/O device during the Idle cycle. This allows CPU communication on the data bus.
RESET	I	**Reset:** Reset is an active high input which clears the Command, Status, Request and Temporary registers. It also clears the first/last flip/flop and sets the Mask register. Following a Reset the device is in the Idle cycle.
READY	I	**Ready:** Ready is an input used to extend the memory read and write pulses from the 8237A to accommodate slow memories or I/O peripheral devices. Ready must not make transitions during its specified setup/hold time.
HLDA	I	**Hold Acknowledge:** The active high Hold Acknowledge from the CPU indicates that it has relinquished control of the system busses.
DREQ0-DREQ3	I	**DMA Request:** The DMA Request lines are individual asynchronous channel request inputs used by peripheral circuits to obtain DMA service. In fixed Priority, DREQ0 has the highest priority and DREQ3 has the lowest priority. A request is generated by activating the DREQ line of a channel. DACK will acknowledge the recognition of DREQ signal. Polarity of DREQ is programmable. Reset intializes these lines to active high. DREQ must be maintained until the corresponding DACK goes active.
DB0-DB7	I/O	**Data Bus:** The Data Bus lines are bidirectional three-state signals connected to the system data bus. The outputs are enabled in the Program condition during the I/O Read to output the contents of an Address register, a Status register, the Temporary register or a Word Count register to the CPU. The outputs are disabled and the inputs are read during an I/O Write cycle when the CPU is programming the 8237A control registers. During DMA cycles the most significant 8 bits of the address are output onto the data bus to be strobed into an external latch by ADSTB. In memory-to-memory operations, data from the memory comes into the 8237A on the data bus during the read-from-memory transfer. In the write-to-memory transfer, the data bus outputs place the data into the new memory location.
$\overline{IOR}$	I/O	**I/O Read:** I/O Read is a bidirectional active low three-state line. In the Idle cycle, it is an input control signal used by the CPU to read the control registers. In the Active cycle, it is an output control signal used by the 8237A to access data from a peripheral during a DMA Write transfer.
$\overline{IOW}$	I/O	**I/O Write:** I/O Write is a bidirectional active low three-state line. In the Idle cycle, it is an input control signal used by the CPU to load information into the 8237A. In the Active cycle, it is an output control signal used by the 8237A to load data to the peripheral during a DMA Read transfer.
$\overline{EOP}$	I/O	**End of Process:** End of Process is an active low bidirectional signal. Information concerning the completion of DMA services is available at the bidirectional $\overline{EOP}$ pin. The 8237A allows an external signal to terminate an active DMA service. This is accomplished by pulling the $\overline{EOP}$ input low with an external $\overline{EOP}$ signal. The 8237A also generates a pulse when the terminal count (TC) for any channel is reached. This generates an $\overline{EOP}$ signal which is output through the $\overline{EOP}$ Line. The reception of $\overline{EOP}$, either internal or external, will cause the 8237A to terminate the service, reset the request, and, if Autoinitialize is enabled, to write the base registers to the current registers of that channel. The mask bit and TC bit in the status word will be set for the currently active channel by $\overline{EOP}$ unless the channel is programmed for Autoinitialize. In that case, the mask bit remains clear. During memory-to-memory transfers, $\overline{EOP}$ will be output when the TC for channel 1 occurs. $\overline{EOP}$ should be tied high with a pull-up resistor if it is not used to prevent erroneous end of process inputs.
A0-A3	I/O	**Address:** The four least significant address lines are bidirectional three-state signals. In the Idle cycle they are inputs and are used by the 8237A to address the control register to be loaded or read. In the Active cycle they are outputs and provide the lower 4 bits of the output address.

Table 1. Pin Description (Continued)

Symbol	Type	Name and Function
A4-A7	O	**Address:** The four most significant address lines are three-state outputs and provide 4 bits of address. These lines are enabled only during the DMA service.
HRQ	O	**Hold Request:** This is the Hold Request to the CPU and is used to request control of the system bus. If the corresponding mask bit is clear, the presence of any valid DREQ causes 8237A to issue the HRQ. After HRQ goes active at least one clock cycle (TCY) must occur before HLDA goes active.
DACK0-DACK3	O	**DMA Acknowledge:** DMA Acknowledge is used to notify the individual peripherals when one has been granted a DMA cycle. The sense of these lines is programmable. Reset initializes them to active low.
AEN	O	**Address Enable:** Address Enable enables the 8-bit latch containing the upper 8 address bits onto the system address bus. AEN can also be used to disable other system bus drivers during DMA transfers. AEN is active HIGH.
ADSTB	O	**Address Strobe:** The active high, Address Strobe is used to strobe the upper address byte into an external latch.
$\overline{MEMR}$	O	**Memory Read:** The Memory Read signal is an active low three-state output used to access data from the selected memory location during a DMA Read or a memory-to-memory transfer.
$\overline{MEMW}$	O	**Memory Write:** The Memory Write is an active low three-state output used to write data to the selected memory location during a DMA Write or a memory-to-memory transfer.

FUNCTIONAL DESCRIPTION

The 8237A block diagram includes the major logic blocks and all of the internal registers. The data interconnection paths are also shown. Not shown are the various control signals between the blocks. The 8237A contains 344 bits of internal memory in the form of registers. Figure 3 lists these registers by name and shows the size of each. A detailed description of the registers and their functions can be found under Register Description.

Name	Size	Number
Base Address Registers	16 bits	4
Base Word Count Registers	16 bits	4
Current Address Registers	16 bits	4
Current Word Count Registers	16 bits	4
Temporary Address Register	16 bits	1
Temporary Word Count Register	16 bits	1
Status Register	8 bits	1
Command Register	8 bits	1
Temporary Register	8 bits	1
Mode Registers	6 bits	4
Mask Register	4 bits	1
Request Register	4 bits	1

Figure 3. 8237A Internal Registers

The 8237A contains three basic blocks of control logic. The Timing Control block generates internal timing and external control signals for the 8237A. The Program Command Control block decodes the various commands given to the 8237A by the microprocessor prior to servicing a DMA Request. It also decodes the Mode Control word used to select the type of DMA during the servicing. The Priority Encoder block resolves priority contention between DMA channels requesting service simultaneously.

The Timing Control block derives internal timing from the clock input. In 8237A systems this input will usually be the $\phi 2$ TTL clock from an 8224 or CLK from an 8085AH or 8284A. For 8085AH-2 systems above 3.9 MHz, the 8085 CLK(OUT) does not satisfy 8237A-5 clock LOW and HIGH time requirements. In this case, an external clock should be used to drive the 8237A-5.

DMA Operation

The 8237A is designed to operate in two major cycles. These are called Idle and Active cycles. Each device cycle is made up of a number of states. The 8237A can assume seven separate states, each composed of one full clock period. State I (SI) is the inactive state. It is entered when the 8237A has no valid DMA requests pending. While in SI, the DMA controller is inactive but may be in the Program Condition, being programmed by the processor. State S0 (S0) is the first state of a DMA service. The 8237A has requested a hold but the processor has not yet returned an acknowledge. The 8237A may still be programmed until it receives HLDA from the CPU. An acknowledge from the CPU will signal that DMA transfers may begin. S1, S2, S3 and S4 are the working states of the DMA service. If more time is needed to complete a transfer than is available with normal timing, wait states (SW) can be inserted between S2 or S3 and S4 by the use of the Ready line on the 8237A. Note that the data is transferred directly from the I/O device to memory (or vice versa) with $\overline{IOR}$ and $\overline{MEMW}$ (or $\overline{MEMR}$ and $\overline{IOW}$) being active at the same time. The data is not read into or driven out of the 8237A in I/O-to-memory or memory-to-I/O DMA transfers.

Memory-to-memory transfers require a read-from and a write-to-memory to complete each transfer. The states, which resemble the normal working states, use two digit numbers for identification. Eight states are required for a single transfer. The first four states (S11, S12, S13, S14) are used for the read-from-memory half

and the last four states (S21, S22, S23, S24) for the write-to-memory half of the transfer.

IDLE CYCLE

When no channel is requesting service, the 8237A will enter the Idle cycle and perform "SI" states. In this cycle the 8237A will sample the DREQ lines every clock cycle to determine if any channel is requesting a DMA service. The device will also sample $\overline{CS}$, looking for an attempt by the microprocessor to write or read the internal registers of the 8237A. When $\overline{CS}$ is low and HLDA is low, the 8237A enters the Program Condition. The CPU can now establish, change or inspect the internal definition of the part by reading from or writing to the internal registers. Address lines A0-A3 are inputs to the device and select which registers will be read or written. The $\overline{IOR}$ and $\overline{IOW}$ lines are used to select and time reads or writes. Due to the number and size of the internal registers, an internal flip-flop is used to generate an additional bit of address. This bit is used to determine the upper or lower byte of the 16-bit Address and Word Count registers. The flip-flop is reset by Master Clear or Reset. A separate software command can also reset this flip-flop.

Special software commands can be executed by the 8237A in the Program Condition. These commands are decoded as sets of addresses with the $\overline{CS}$ and $\overline{IOW}$. The commands do not make use of the data bus. Instructions include Clear First/Last Flip-FLop and Master Clear.

ACTIVE CYCLE

When the 8237A is in the Idle cycle and a non-masked channel requests a DMA service, the device will output an HRQ to the microprocessor and enter the Active cycle. It is in this cycle that the DMA service will take place, in one of four modes:

Single Transfer Mode — In Single Transfer mode the device is programmed to make one transfer only. The word count will be decremented and the address decremented or incremented following each transfer. When the word count "rolls over" from zero to FFFFH, a Terminal Count (TC) will cause an Autoinitialize if the channel has been programmed to do so.

DREQ must be held active until DACK becomes active in order to be recognized. If DREQ is held active throughout the single transfer, HRQ will go inactive and release the bus to the system. It will again go active and, upon receipt of a new HLDA, another single transfer will be performed, in 8080A, 8085AH, 8088, or 8086 system this will ensure one full machine cycle execution between DMA transfers. Details of timing between the 8237A and other bus control protocols will depend upon the characteristics of the microprocessor involved.

Block Transfer Mode — In Block Transfer mode the device is activated by DREQ to continue making transfers during the service until a TC, caused by word count going to FFFFH, or an external End of Process ($\overline{EOP}$) is encountered. DREQ need only be held active until DACK becomes active. Again, an Autoinitialization will occur at the end of the service if the channel has been programmed for it.

Demand Transfer Mode — In Demand Transfer mode the device is programmed to continue making transfers until a TC or external $\overline{EOP}$ is encountered or until DREQ goes inactive. Thus transfers may continue until the I/O device has exhausted its data capacity. After the I/O device has had a chance to catch up, the DMA service is re-established by means of a DREQ. During the time between services when the microprocessor is allowed to operate, the intermediate values of address and word count are stored in the 8237A Current Address and Current Word Count registers. Only an $\overline{EOP}$ can cause an Autoinitialize at the end of the service. $\overline{EOP}$ is generated either by TC or by an external signal.

Cascade Mode — This mode is used to cascade more than one 8237A together for simple system expansion. The HRQ and HLDA signals from the additional 8237A are connected to the DREQ and DACK signals of a channel of the initial 8237A. This allows the DMA requests of the additional device to propagate through the priority network circuitry of the preceding device. The priority chain is preserved and the new device must wait for its turn to acknowledge requests. Since the cascade channel of the initial 8237A is used only for prioritizing the additional device, it does not output any address or control signals of its own. These could conflict with the outputs of the active channel in the added device. The 8237A will respond to DREQ and DACK but all other outputs except HRQ will be disabled.

Figure 4 shows two additional devices cascaded into an initial device using two of the previous channels. This forms a two level DMA system. More 8237As could be added at the second level by using the remaining channels of the first level. Additional devices can also be added by cascading into the channels of the second level devices, forming a third level.

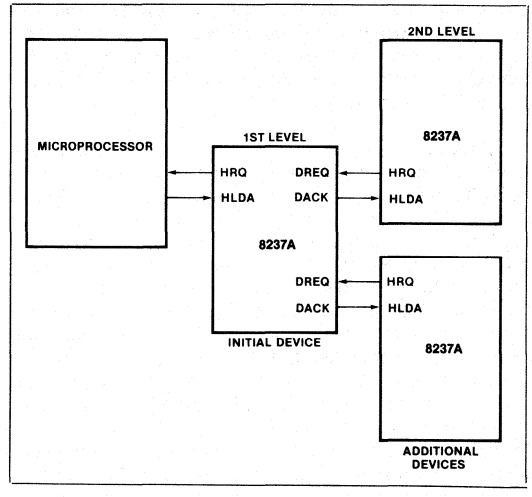

Figure 4. Cascaded 8237As

TRANSFER TYPES

Each of the three active transfer modes can perform three different types of transfers. These are Read, Write and Verify. Write transfers move data from an I/O device to the memory by activating $\overline{MEMW}$ and $\overline{IOR}$. Read transfers move data from memory to an I/O device by activating $\overline{MEMR}$ and $\overline{IOW}$. Verify transfers are pseudo transfers. The 8237A operates as in Read or Write transfers generating addresses, and responding to EOP, etc. However, the memory and I/O control lines all remain inactive. Verify mode is not permitted during memory to memory operation.

Memory-to-Memory — To perform block moves of data from one memory address space to another with a minimum of program effort and time, the 8237A includes a memory-to-memory transfer feature. Programming a bit in the Command register selects channels 0 and 1 to operate as memory-to-memory transfer channels. The transfer is initiated by setting the software DREQ for channel 0. The 8237A requests a DMA service in the normal manner. After HLDA is true, the device, using eight-state transfers in Block Transfer mode, reads data from the memory. The channel 0 Current Address register is the source for the address used and is decremented or incremented in the normal manner. The data byte read from the memory is stored in the 8237A internal Temporary register. Channel 1 then writes the data from the Temporary register to memory using the address in its Current Address register and incrementing or decrementing it in the normal manner. The channel 1 Current Word Count is decremented. When the word count of channel 1 goes to FFFFH, a TC is generated causing an $\overline{EOP}$ output terminating the service.

Channel 0 may be programmed to retain the same address for all transfers. This allows a single word to be written to a block of memory.

The 8237A will respond to external $\overline{EOP}$ signals during memory-to-memory transfers. Data comparators in block search schemes may use this input to terminate the service when a match is found. The timing of memory-to-memory transfers is found in Figure 12. Memory-to-memory operations can be detected as an active AEN with no DACK outputs.

Autoinitialize — By programming a bit in the Mode register, a channel may be set up as an Autoinitialize channel. During Autoinitialize initialization, the original values of the Current Address and Current Word Count registers are automatically restored from the Base Address and Base Word count registers of that channel following $\overline{EOP}$. The base registers are loaded simultaneously with the current registers by the microprocessor and remain unchanged throughout the DMA service. The mask bit is not set when the channel is in Autoinitialize. Following Autoinitialize the channel is ready to perform another DMA service, without CPU intervention, as soon as a valid DREQ is detected.

Priority — The 8237A has two types of priority encoding available as software selectable options. The first is Fixed Priority which fixes the channels in priority order based upon the descending value of their number. The channel with the lowest priority is 3 followed by 2, 1 and the highest priority channel, 0. After the recognition of any one channel for service, the other channels are prevented from interferring with that service until it is completed.

The second scheme is Rotating Priority. The last channel to get service becomes the lowest priority channel with the others rotating accordingly.

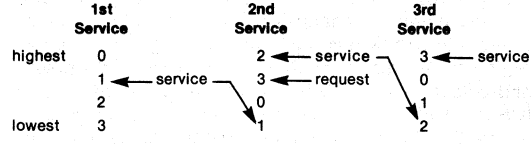

With Rotating Priority in a single chip DMA system, any device requesting service is guaranteed to be recognized after no more than three higher priority services have occurred. This prevents any one channel from monopolizing the system.

Compressed Timing — In order to achieve even greater throughput where system characteristics permit, the 8237A can compress the transfer time to two clock cycles. From Figure 11 it can be seen that state S3 is used to extend the access time of the read pulse. By removing state S3, the read pulse width is made equal to the write pulse width and a transfer consists only of state S2 to change the address and state S4 to perform the read/write. S1 states will still occur when A8–A15 need updating (see Address Generation). Timing for compressed transfers is found in Figure 14.

Address Generation — In order to reduce pin count, the 8237A multiplexes the eight higher order address bits on the data lines. State S1 is used to output the higher order address bits to an external latch from which they may be placed on the address bus. The falling edge of Address Strobe (ADSTB) is used to load these bits from the data lines to the latch. Address Enable (AEN) is used to enable the bits onto the address bus through a three-state enable. The lower order address bits are output by the 8237A directly. Lines A0–A7 should be connected to the address bus. Figure 11 shows the time relationships between CLK, AEN, ADSTB, DB0–DB7 and A0–A7.

During Block and Demand Transfer mode services, which include multiple transfers, the addresses generated will be sequential. For many transfers the data held in the external address latch will remain the same. This data need only change when a carry or borrow from A7 to A8 takes place in the normal sequence of addresses. To save time and speed transfers, the 8237A executes S1 states only when updating of A8–A15 in the latch is necessary. This means for long services, S1 states and Address Strobes may occur only once every 256 transfers, a savings of 255 clock cycles for each 256 transfers.

REGISTER DESCRIPTION

Current Address Register — Each channel has a 16-bit Current Address register. This register holds the value of the address used during DMA transfers. The address is automatically incremented or decremented after each transfer and the intermediate values of the address are stored in the Current Address register during the transfer. This register is written or read by the microprocessor in successive 8-bit bytes. It may also be reinitialized by an Autoinitialize back to its original value. Autoinitialize takes place only after an $\overline{EOP}$.

Current Word Register — Each channel has a 16-bit Current Word Count register. This register determines the number of transfers to be performed. The actual number of transfers will be one more than the number programmed in the Current Word Count register (i.e., programming a count of 100 will result in 101 transfers). The word count is decremented after each transfer. The intermediate value of the word count is stored in the register during the transfer. When the value in the register goes from zero to FFFFH, a TC will be generated. This register is loaded or read in successive 8-bit bytes by the microprocessor in the Program Condition. Following the end of a DMA service it may also be reinitialized by an Autoinitialization back to its original value. Autoinitialize can occur only when an $\overline{EOP}$ occurs. If it is not Autoinitialized, this register will have a count of FFFFH after TC.

Base Address and Base Word Count Registers — Each channel has a pair of Base Address and Base Word Count registers. These 16-bit registers store the original value of their associated current registers. During Autoinitialize these values are used to restore the current registers to their original values. The base registers are written simultaneously with their corresponding current register in 8-bit bytes in the Program Condition by the microprocessor. These registers cannot be read by the microprocessor.

Command Register — This 8-bit register controls the operation of the 8237A. It is programmed by the microprocessor in the Program Condition and is cleared by Reset or a Master Clear instruction. The following table lists the function of the command bits. See Figure 6 for address coding.

Mode Register — Each channel has a 6-bit Mode register associated with it. When the register is being written to by the microprocessor in the Program Condition, bits 0 and 1 determine which channel Mode register is to be written.

Request Register — The 8237A can respond to requests for DMA service which are initiated by software as well as by a DREQ. Each channel has a request bit associated with it in the 4-bit Request register. These are nonmaskable and subject to prioritization by the Priority Encoder network. Each register bit is set or reset separately under software control or is cleared upon generation of a TC or external $\overline{EOP}$. The entire register is cleared by a Reset. To set or reset a bit, the software loads the proper form of the data word. See Figure 5 for register address coding. In order to make a software request, the channel must be in Block Mode.

Command Register

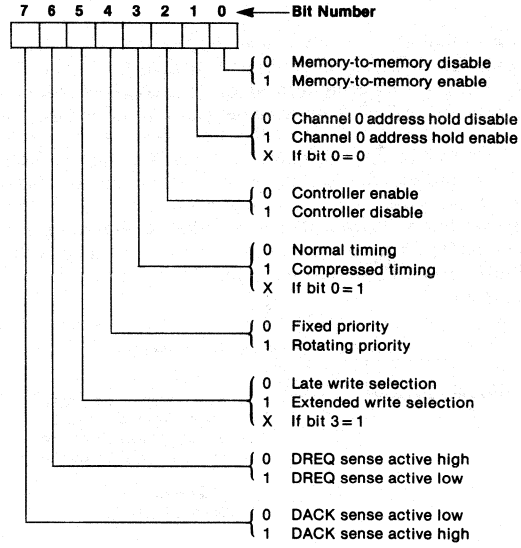

Mode Register

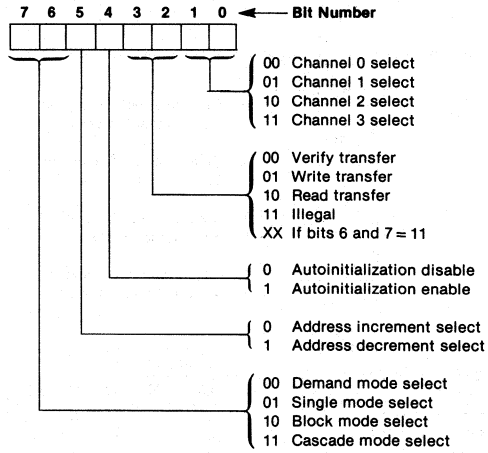

Request Register

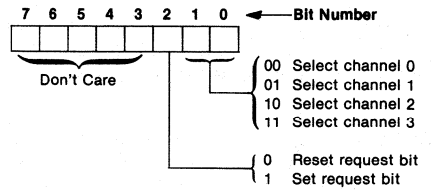

Mask Register — Each channel has associated with it a mask bit which can be set to disable the incoming DREQ. Each mask bit is set when its associated channel produces an $\overline{EOP}$ if the channel is not programmed for Autoinitialize. Each bit of the 4-bit Mask register may also be set or cleared separately under software control. The entire register is also set by a Reset. This disables all DMA requests until a clear Mask register instruction allows them to occur. The instruction to separately set or clear the mask bits is similar in form to that used with the Request register. See Figure 5 for instruction addressing.

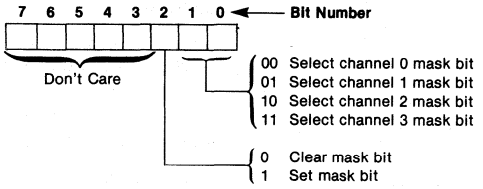

All four bits of the Mask register may also be written with a single command.

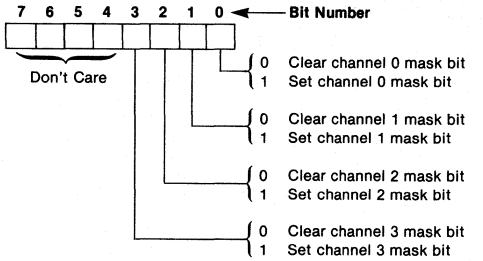

Register	Operation	Signals						
		$\overline{CS}$	$\overline{IOR}$	$\overline{IOW}$	A3	A2	A1	A0
Command	Write	0	1	0	1	0	0	0
Mode	Write	0	1	0	1	0	1	1
Request	Write	0	1	0	1	0	0	1
Mask	Set/Reset	0	1	0	1	0	1	0
Mask	Write	0	1	0	1	1	1	1
Temporary	Read	0	0	1	1	1	0	1
Status	Read	0	0	1	1	0	0	0

Figure 5. Definition of Register Codes

Status Register — The Status register is available to be read out of the 8237A by the microprocessor. It contains information about the status of the devices at this point. This information includes which channels have reached a terminal count and which channels have pending DMA requests. Bits 0-3 are set every time a TC is reached by that channel or an external $\overline{EOP}$ is applied. These bits are cleared upon Reset and on each Status Read. Bits 4-7 are set whenever their corresponding channel is requesting service.

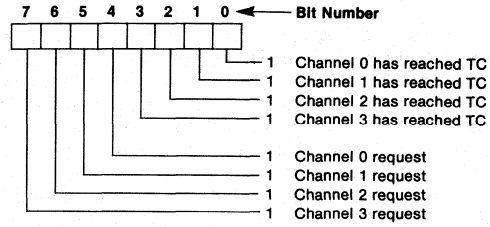

Temporary Register — The Temporary register is used to hold data during memory-to-memory transfers. Following the completion of the transfers, the last word moved can be read by the microprocessor in the Program Condition. The Temporary register always contains the last byte transferred in the previous memory-to-memory operation, unless cleared by a Reset.

Software Commands — These are additional special software commands which can be executed in the Program Condition. They do not depend on any specific bit pattern on the data bus. The two software commands are:

Clear First/Last Flip-Flop: This command is executed prior to writing or reading new address or word count information to the 8237A. This initializes the flip-flop to a known state so that subsequent accesses to register contents by the microprocessor will address upper and lower bytes in the correct sequence.

Master Clear: This software instruction has the same effect as the hardware Reset. The Command, Status, Request, Temporary, and Internal First/Last Flip-Flop registers are cleared and the Mask register is set. The 8237A will enter the Idle cycle.

Clear Mask Register: This command clears the mask bits of all four channels, enabling them to accept DMA requests.

Figure 6 lists the address codes for the software commands:

Signals						Operation
A3	A2	A1	A0	$\overline{IOR}$	$\overline{IOW}$	
1	0	0	0	0	1	Read Status Register
1	0	0	0	1	0	Write Command Register
1	0	0	1	0	1	Illegal
1	0	0	1	1	0	Write Request Register
1	0	1	0	0	1	Illegal
1	0	1	0	1	0	Write Single Mask Register Bit
1	0	1	1	0	1	Illegal
1	0	1	1	1	0	Write Mode Register
1	1	0	0	0	1	Illegal
1	1	0	0	1	0	Clear Byte Pointer Flip/Flop
1	1	0	1	0	1	Read Temporary Register
1	1	0	1	1	0	Master Clear
1	1	1	0	0	1	Illegal
1	1	1	0	1	0	Clear Mask Register
1	1	1	1	0	1	Illegal
1	1	1	1	1	0	Write All Mask Register Bits

Figure 6. Software Command Codes

Channel	Register	Operation	Signals							Internal Flip-Flop	Data Bus DB0-DB7
			$\overline{CS}$	$\overline{IOR}$	$\overline{IOW}$	A3	A2	A1	A0		
0	Base and Current Address	Write	0	1	0	0	0	0	0	0	A0-A7
			0	1	0	0	0	0	0	1	A8-A15
	Current Address	Read	0	0	1	0	0	0	0	0	A0-A7
			0	0	1	0	0	0	0	1	A8-A15
	Base and Current Word Count	Write	0	1	0	0	0	0	1	0	W0-W7
			0	1	0	0	0	0	1	1	W8-W15
	Current Word Count	Read	0	0	1	0	0	0	1	0	W)0-W7
			0	0	1	0	0	0	1	1	W8-W15
1	Base and Current Address	Write	0	1	0	0	0	1	0	0	A0-A7
			0	1	0	0	0	1	0	1	A8-A15
	Current Address	Read	0	0	1	0	0	1	0	0	A0-A7
			0	0	1	0	0	1	0	1	A8-A15
	Base and Current Word Count	Write	0	1	0	0	0	1	1	0	W0-W7
			0	1	0	0	0	1	1	1	W8-W15
	Current Word Count	Read	0	0	1	0	0	1	1	0	W0-W7
			0	0	1	0	0	1	1	1	W8-W15
2	Base and Current Address	Write	0	1	0	0	1	0	0	0	A0-A7
			0	1	0	0	1	0	0	1	A8-A15
	Current Address	Read	0	0	1	0	1	0	0	0	A0-A7
			0	0	1	0	1	0	0	1	A8-A15
	Base and Current Word Count	Write	0	1	0	0	1	0	1	0	W0-W7
			0	1	0	0	1	0	1	1	W8-W15
	Current Word Count	Read	0	0	1	0	1	0	1	0	W)0-W7
			0	0	1	0	1	0	1	1	W8-W15
3	Base and Current Address	Write	0	1	0	0	1	1	0	0	A0-A7
			0	1	0	0	1	1	0	1	A8-A15
	Current Address	Read	0	0	1	0	1	1	0	0	A0-A7
			0	0	1	0	1	1	0	1	A8-A15
	Base and Current Word Count	Write	0	1	0	0	1	1	1	0	W0-W7
			0	1	0	0	1	1	1	1	W8-W15
	Current Word Count	Read	0	0	1	0	1	1	1	0	W)0-W7
			0	0	1	0	1	1	1	1	W8-W15

Figure 7. Word Count and Address Register Command Codes

PROGRAMMING

The 8237A will accept programming from the host processor any time that HLDA is inactive; this is true even if HRQ is active. The responsibility of the host is to assure that programming and HLDA are mutually exclusive. Note that a problem can occur if a DMA request occurs, on an unmasked channel while the 8237A is being programmed. For instance, the CPU may be starting to reprogram the two byte Address register of channel 1 when channel 1 receives a DMA request. If the 8237A is enabled (bit 2 in the command register is 0) and channel 1 is unmasked, a DMA service will occur after only one byte of the Address register has been reprogrammed. This can be avoided by disabling the controller (setting bit 2 in the command register) or masking the channel before programming any other registers. Once the programming is complete, the controller can be enabled/unmasked.

After power-up it is suggested that all internal locations, especially the Mode registers, be loaded with some valid value. This should be done even if some channels are unused.

APPLICATION INFORMATION

Figure 8 shows a convenient method for configuring a DMA system with the 8237A controller and an 8080A/8085AH microprocessor system. The multimode DMA controller issues a HRQ to the processor whenever there is at least one valid DMA request from a peripheral device. When the processor replies with a HLDA signal, the 8237A takes control of the address bus, the data bus and the control bus. The address for the first transfer operation comes out in two bytes — the least significant 8 bits on the eight address outputs and the most significant 8 bits on the data bus. The contents of the data bus are then latched into the 8282 8-bit latch to complete the full 16 bits of the address bus. The 8282 is a high speed, 8-bit, three-state latch in a 20-pin package. After the initial transfer takes place, the latch is updated only after a carry or borrow is generated in the least significant address byte. Four DMA channels are provided when one 8237A is used.

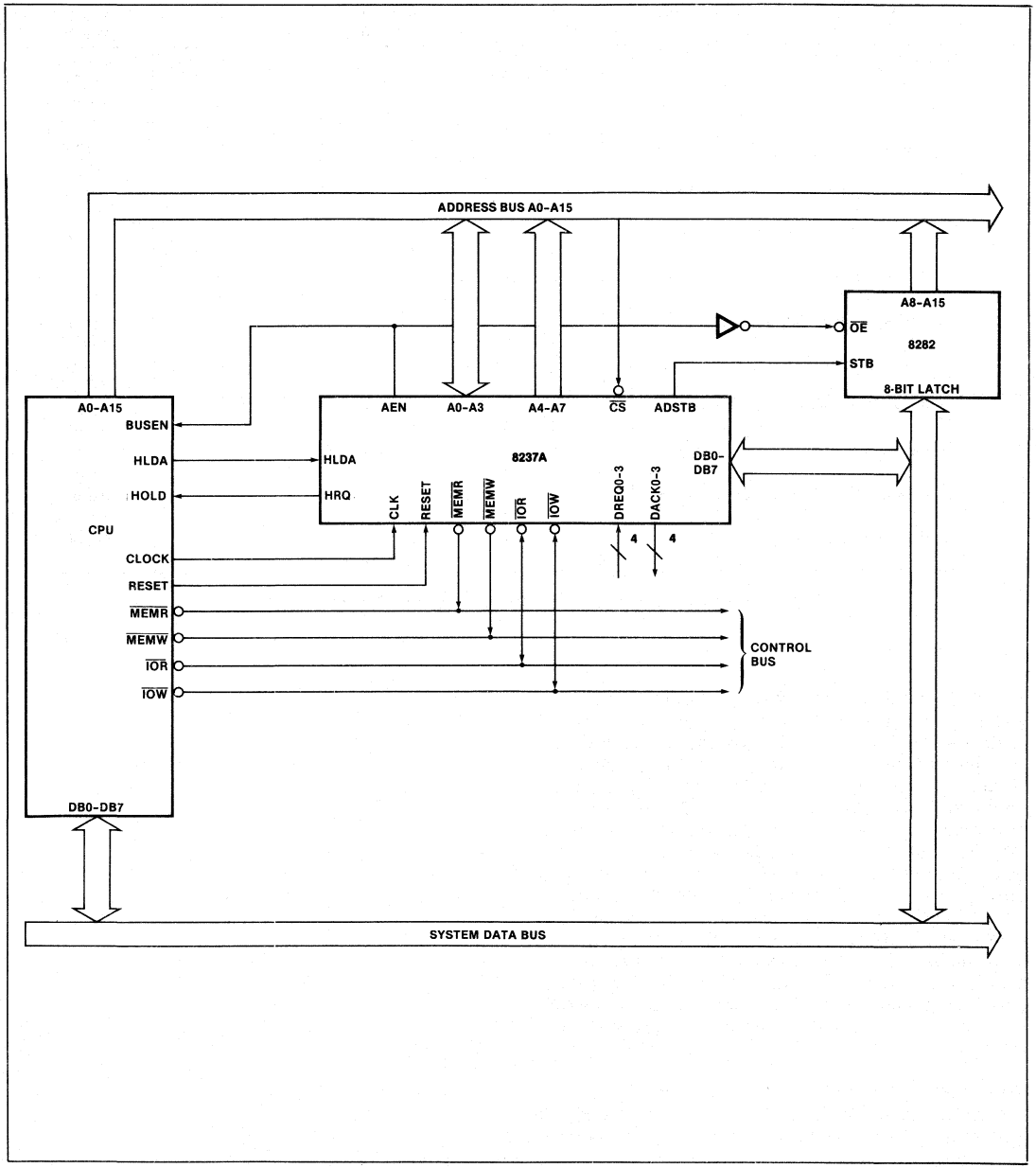

Figure 8. 8237A System Interface

ABSOLUTE MAXIMUM RATINGS*

Ambient Temperature under Bias ..... 0°C to 70°C
Storage Temperature ..... −65°C to +150°C
Voltage on any Pin with
Respect to Ground ..... −0.5 to 7V
Power Dissipation ..... 1.5 Watt

NOTICE: Stresses above those listed under "Absolute Maximum Ratings" may cause permanent damage to the device. This is a stress rating only and functional operation of the device at these or any other conditions above those indicated in the operational sections of this specification is not implied. Exposure to absolute maximum rating conditions for extended periods may affect device reliability.

D.C. CHARACTERISTICS (T_A = 0°C to 70°C, V_{CC} = 5.0V ±5%, GND = 0V)

Symbol	Parameter	Min.	Typ.(1)	Max.	Unit	Test Conditions
V_{OH}	Output HIGH Voltage	2.4			V	I_{OH} = −200 μA
		3.3			V	I_{OH} = −100 μA (HRQ Only)
V_{OL}	Output LOW Voltage			.45	V	I_{OL} = 2.0 mA (data bus) I_{OL} = 3.2 mA (other outputs)
V_{IH}	Input HIGH Voltage	2.0		V_{CC} + 0.5	V	
V_{IL}	Input LOW Voltage	−0.5		0.8	V	
I_{LI}	Input Load Current			±10	μA	0V ≤ V_{IN} ≤ V_{CC}
I_{LO}	Output Leakage Current			±10	μA	0.45V ≤ V_{OUT} ≤ V_{CC}
I_{CC}	V_{CC} Supply Current		65	130	mA	T_A = +25°C
			75	150	mA	T_A = 0°C
C_O	Output Capacitance		4	8	pF	fc = 1.0 MHz, Inputs = 0V
C_I	Input Capacitance		8	15	pF	
C_{IO}	I/O Capacitance		10	18	pF	

NOTES:

1. Typical values are for T_A = 25°C, nominal supply voltage and nominal processing parameters.
2. Input timing parameters assume transition times of 20 ns or less. Waveform measurement points for both input and output signals are 2.0V for HIGH and 0.8V for LOW, unless otherwise noted.
3. Output loading is 1 TTL gate plus 50 pF capacitance, unless otherwise noted.
4. The net $\overline{IOW}$ or $\overline{MEMW}$ Pulse width for normal write will be TCY−100 ns and for extended write will be 2TCY−100 ns. The net $\overline{IOR}$ or $\overline{MEMR}$ pulse width for normal read will be 2TCY−50 ns and for compressed read will be TCY−50 ns.
5. TDQ is specified for two different output HIGH levels. TDQ1 is measured at 2.0V. TDQ2 is measured at 3.3V. The value for TDQ2 assumes an external 3.3 kΩ pull-up resistor connected from HRQ to V_{CC}.
6. DREQ should be held active until DACK is returned.
7. DREQ and DACK signals may be active high or active low. Timing diagrams assume the active high mode.
8. Output loading on the data bus is 1 TTL gate plus 100 pF capacitance.
9. Successive read and/or write operations by the external processor to program or examine the controller must be timed to allow at least 600 ns for the 8237A, at least 500 ns for the 8237A-4 and at least 400 ns for the 8237A-5, as recovery time between active read or write pulses.
10. Parameters are listed in alphabetical order.
11. Pin 5 is an input that should always be at a logic high level. An internal pull-up resistor will establish a logic high when the pin is left floating. Alternatively, pin 5 may be tied to V_{CC}.

A.C. TESTING INPUT, OUTPUT WAVEFORM

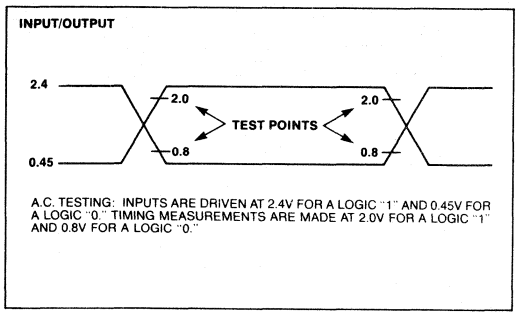

A.C. TESTING LOAD CIRCUIT

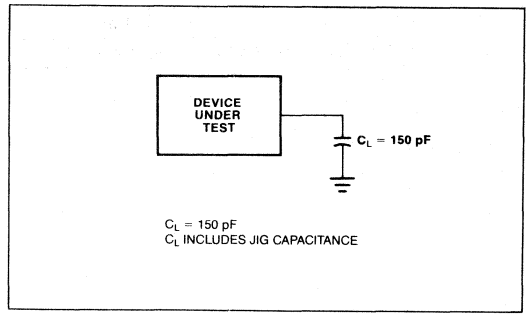

A.C. CHARACTERISTICS—DMA (MASTER) MODE ($T_A = 0°C$ to $70°C$, $V_{CC} = +5V \pm 5\%$, GND = 0V)

Symbol	Parameter	8237A		8237A-4		8237A-5		Unit
		Min.	Max.	Min.	Max.	Min.	Max.	
TAEL	AEN HIGH from CLK LOW (S1) Delay Time		300		225		200	ns
TAET	AEN LOW from CLK HIGH (S1) Delay Time		200		150		130	ns
TAFAB	ADR Active to Float Delay from CLK HIGH		150		120		90	ns
TAFC	$\overline{READ}$ or $\overline{WRITE}$ Float from CLK HIGH		150		120		120	ns
TAFDB	DB Active to Float Delay from CLK HIGH		250		190		170	ns
TAHR	ADR from $\overline{READ}$ HIGH Hold Time	TCY–100		TCY–100		TCY–100		ns
TAHS	DB from ADSTB LOW Hold Time	50		40		30		ns
TAHW	ADR from $\overline{WRITE}$ HIGH Hold Time	TCY–50		TCY–50		TCY–50		ns
TAK	DACK Valid from CLK LOW Delay Time (Note 7)		250		220		170	ns
	$\overline{EOP}$ HIGH from CLK HIGH Delay Time		250		190		170	ns
	$\overline{EOP}$ LOW to CLK HIGH Delay Time		250		190		100	ns
TASM	ADR Stable from CLK HIGH		250		190		170	ns
TASS	DB to ADSTB LOW Setup Time	100		100		100		ns
TCH	Clock High Time (Transitions $\leq$ 10 ns)	120		100		80		ns
TCL	Clock LOW Time (Transitions $\leq$ 10 ns)	150		110		68		ns
TCY	CLK Cycle Time	320		250		200		ns
TDCL	CLK HIGH to $\overline{READ}$ or $\overline{WRITE}$ LOW Delay (Note 4)		270		200		190	ns
TDCTR	$\overline{READ}$ HIGH from CLK HIGH (S4) Delay Time (Note 4)		270		210		190	ns
TDCTW	$\overline{WRITE}$ HIGH from CLK HIGH (S4) Delay Time (Note 4)		200		150		130	ns
TDQ1	HRQ Valid from CLK HIGH Delay Time (Note 5)		160		120		120	ns
TDQ2			250		190		120	ns
TEPS	$\overline{EOP}$ LOW from CLK LOW Setup Time	60		45		40		ns
TEPW	$\overline{EOP}$ Pulse Width	300		225		220		ns
TFAAB	ADR Float to Active Delay from CLK HIGH		250		190		170	ns
TFAC	$\overline{READ}$ or $\overline{WRITE}$ Active from CLK HIGH		200		150		150	ns
TFADB	DB Float to Active Delay from CLK HIGH		300		225		200	ns
THS	HLDA Valid to CLK HIGH Setup Time	100		75		75		ns
TIDH	Input Data from $\overline{MEMR}$ HIGH Hold Time	0		0		0		ns
TIDS	Input Data to $\overline{MEMR}$ HIGH Setup Time	250		190		170		ns
TODH	Output Data from $\overline{MEMW}$ HIGH Hold Time	20		20		10		ns
TODV	Output Data Valid to $\overline{MEMW}$ HIGH	200		125		125		ns
TQS	DREQ to CLK LOW (SI, S4) Setup Time (Note 7)	0		0		0		ns
TRH	CLK to READY LOW Hold Time	20		20		20		ns
TRS	READY to CLK LOW Setup Time	100		60		60		ns
TSTL	ADSTB HIGH from CLK HIGH Delay Time		200		150		130	ns
TSTT	ADSTB LOW from CLK HIGH Delay Time		140		110		90	ns

A.C. CHARACTERISTICS—PERIPHERAL (SLAVE) MODE (T_A = 0°C to 70°C, V_{CC} = 5.0V ±5%, GND = 0V)

Symbol	Parameter	8237A		8237A-4		8237A-5		Unit
		Min.	Max.	Min.	Max.	Min.	Max.	
TAR	ADR Valid or $\overline{CS}$ LOW to $\overline{READ}$ LOW	50		50		50		ns
TAW	ADR Valid to $\overline{WRITE}$ HIGH Setup Time	200		150		150		ns
TCW	CS LOW to $\overline{WRITE}$ HIGH Setup Time	200		150		150		ns
TDW	Data Valid to $\overline{WRITE}$ HIGH Setup Time	200		150		150		ns
TRA	ADR or CS Hold from $\overline{READ}$ HIGH	0		0		0		ns
TRDE	Data Access from $\overline{READ}$ LOW (Note 8)		200		200		140	ns
TRDF	DB Float Delay from $\overline{READ}$ HIGH	20	100	20	100	0	70	ns
TRSTD	Power Supply HIGH to RESET LOW Setup Time	500		500		500		ns
TRSTS	RESET to First $\overline{IOWR}$	2TCY		2TCY		2TCY		ns
TRSTW	RESET Pulse Width	300		300		300		ns
TRW	$\overline{READ}$ Width	300		250		200		ns
TWA	ADR from $\overline{WRITE}$ HIGH Hold Time	20		20		20		ns
TWC	CS HIGH from $\overline{WRITE}$ HIGH Hold Time	20		20		20		ns
TWD	Data from $\overline{WRITE}$ HIGH Hold Time	30		30		30		ns
TWWS	Write Width	200		200		160		ns

WAVEFORMS

SLAVE MODE WRITE TIMING

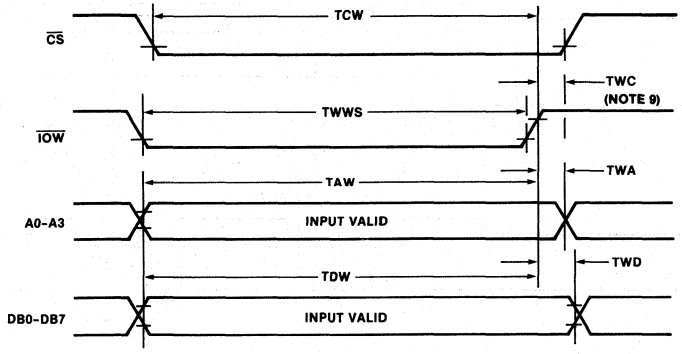

Figure 9. Slave Mode Write

SLAVE MODE READ TIMING

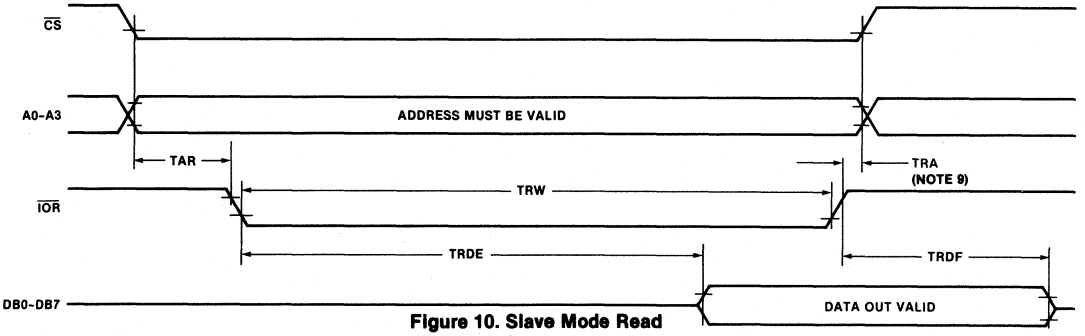

Figure 10. Slave Mode Read

WAVEFORMS (Continued)

DMA TRANSFER TIMING

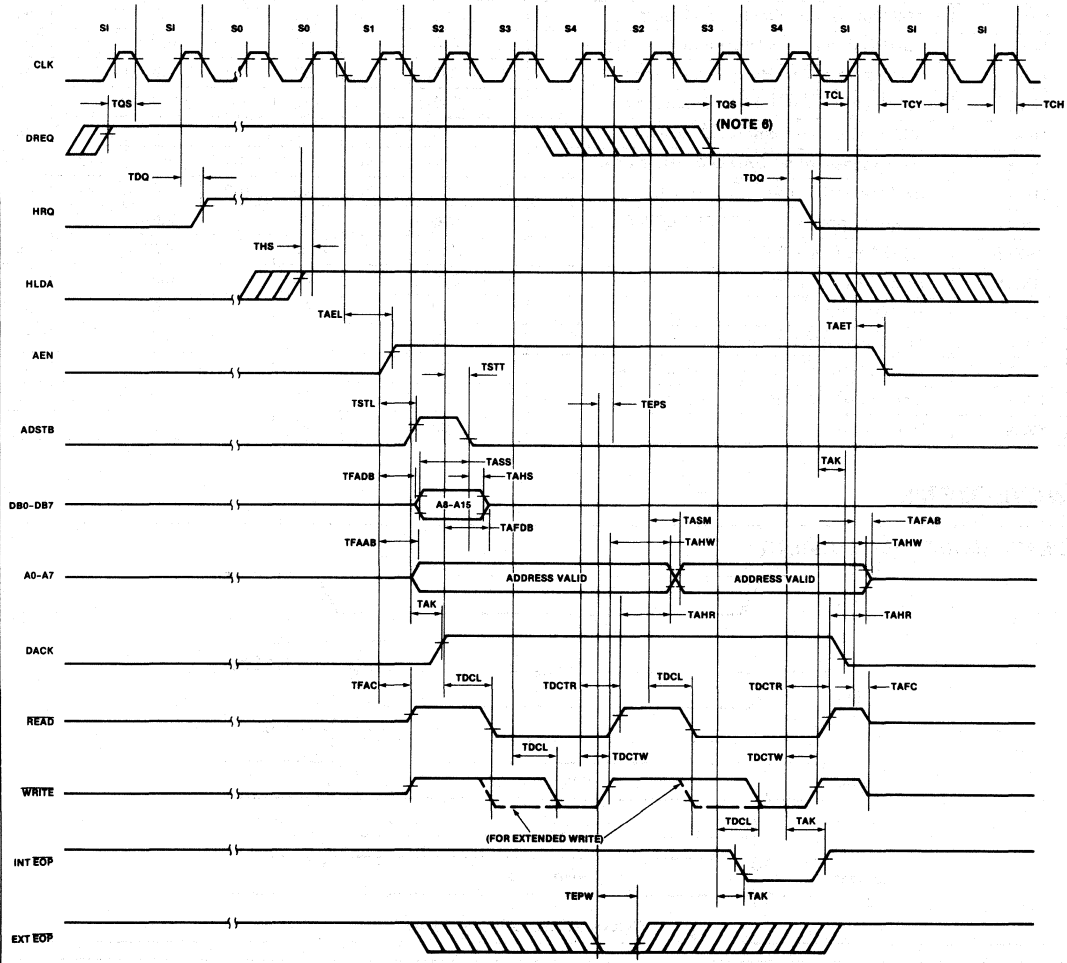

Figure 11. DMA Transfer

WAVEFORMS (Continued)

MEMORY-TO-MEMORY TRANSFER TIMING

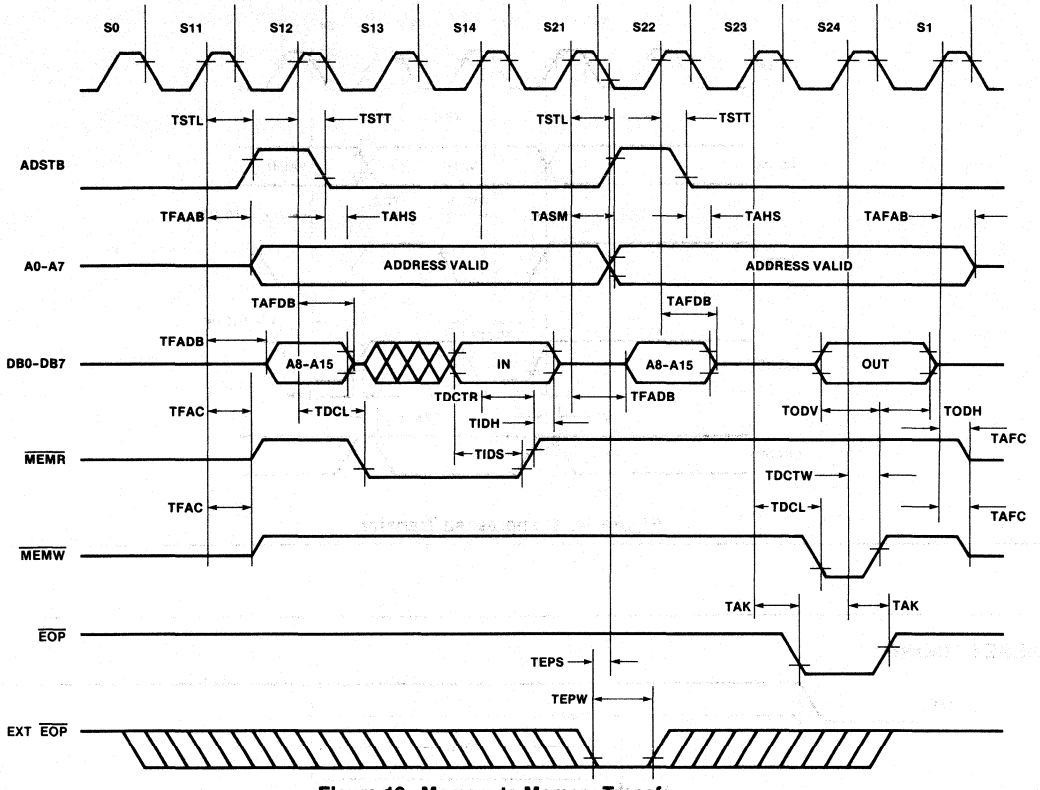

Figure 12. Memory-to-Memory Transfer

READY TIMING

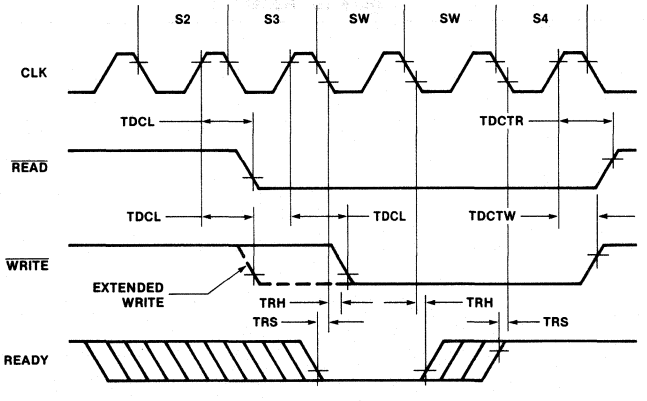

Figure 13. Ready

WAVEFORMS (Continued)

COMPRESSED TRANSFER TIMING

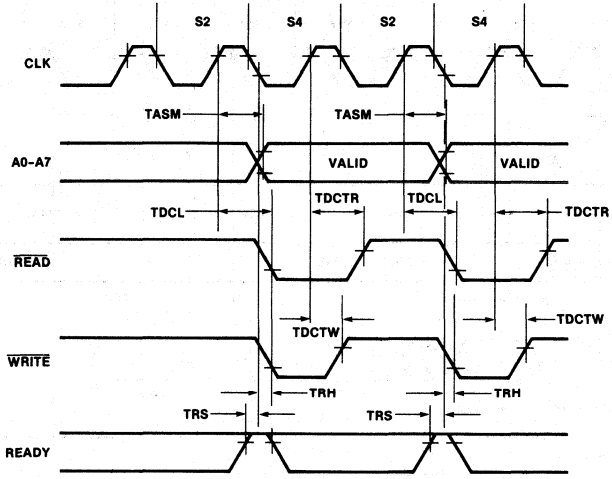

Figure 14. Compressed Transfer

RESET TIMING

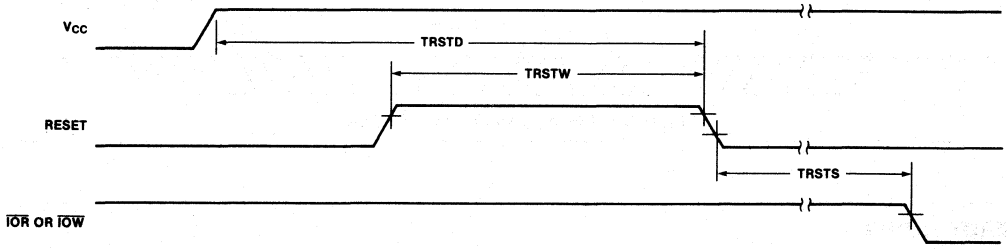

Figure 15. Reset

8257/8257-5
PROGRAMMABLE DMA CONTROLLER

- **MCS-85® Compatible 8257-5**
- **4-Channel DMA Controller**
- **Priority DMA Request Logic**
- **Channel Inhibit Logic**
- **Terminal Count and Modulo 128 Outputs**
- **Single TTL Clock**
- **Single +5V Supply**
- **Auto Load Mode**

The Intel® 8257 is a 4-channel direct memory access (DMA) controller. It is specifically designed to simplify the transfer of data at high speeds for the Intel® microcomputer systems. Its primary function is to generate, upon a peripheral request, a sequential memory address which will allow the peripheral to read or write data directly to or from memory. Acquisition of the system bus in accomplished via the CPU's hold function. The 8257 has priority logic that resolves the peripherals requests and issues a composite hold request to the CPU. It maintains the DMA cycle count for each channel and outputs a control signal to notify the peripheral that the programmed number of DMA cycles is complete. Other output control signals simplify sectored data transfers. The 8257 represents a significant savings in component count for DMA-based microcomputer systems and greatly simplifies the transfer of data at high speed between peripherals and memories.

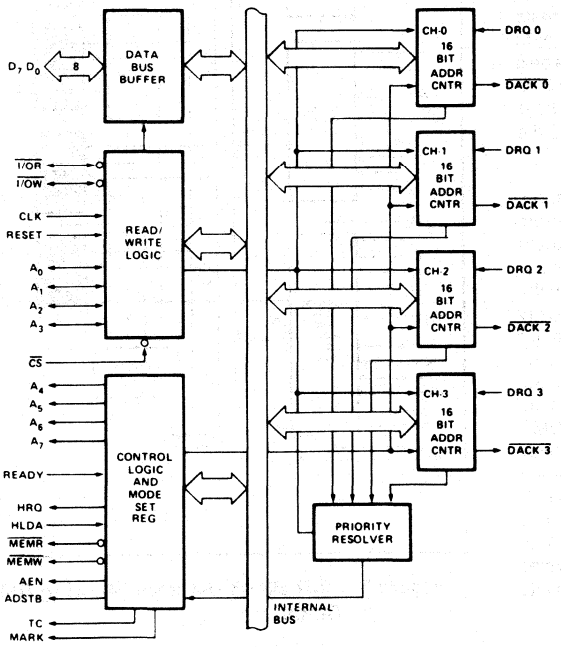

Figure 1. Block Diagram

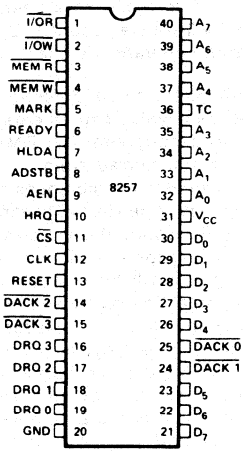

Figure 2. Pin Configuration

FUNCTIONAL DESCRIPTION

General

The 8257 is a programmable, Direct Memory Access (DMA) device which, when coupled with a single Intel® 8212 I/O port device, provides a complete four-channel DMA controller for use in Intel® microcomputer systems. After being initialized by software, the 8257 can transfer a block of data, containing up to 16,384 bytes, between memory and a peripheral device directly, without further intervention required of the CPU. Upon receiving a DMA transfer request from an enabled peripheral, the 8257:

1. Acquires control of the system bus.
2. Acknowledges that requesting peripheral which is connected to the highest priority channel.
3. Outputs the least significant eight bits of the memory address onto system address lines A_0-A_7, outputs the most significant eight bits of the memory address to the 8212 I/O port via the data bus (the 8212 places these address bits on lines A_8-A_{15}), and
4. Generates the appropriate memory and I/O read/write control signals that cause the peripheral to receive or deposit a data byte directly from or to the addressed location in memory.

The 8257 will retain control of the system bus and repeat the transfer sequence, as long as a peripheral maintains its DMA request. Thus, the 8257 can transfer a block of data to/from a high speed peripheral (e.g., a sector of data on a floppy disk) in a single "burst". When the specified number of data bytes have been transferred, the 8257 activates its Terminal Count (TC) output, informing the CPU that the operation is complete.

The 8257 offers three different modes of operation: (1) DMA read, which causes data to be transferred from memory to a peripheral; (2) DMA write, which causes data to be transferred from a peripheral to memory; and (3) DMA verify, which does not actually involve the transfer of data. When an 8257 channel is in the DMA verify mode, it will respond the same as described for transfer operations, except that no memory or I/O read/write control signals will be generated, thus preventing the transfer of data. The 8257, however, will gain control of the system bus and will acknowledge the peripheral's DMA request for each DMA cycle. The peripheral can use these acknowledge signals to enable an internal access of each byte of a data block in order to execute some verification procedure, such as the accumulation of a CRC (Cyclic Redundancy Code) checkword. For example, a block of DMA verify cycles might follow a block of DMA read cycles (memory to peripheral) to allow the peripheral to verify its newly acquired data.

Block Diagram Description

1. DMA Channels

The 8257 provides four separate DMA channels (labeled CH-0 to CH-3). Each channel includes two sixteen-bit registers: (1) a DMA address register, and (2) a terminal count register. Both registers must be initialized before a channel is enabled. The DMA address register is loaded with the address of the first memory location to be accessed. The value loaded into the low-order 14-bits of the terminal count register specifies the number of DMA cycles minus one before the Terminal Count (TC) output is activated. For instance, a terminal count of 0 would cause the TC output to be active in the first DMA cycle for that channel. In general, if N = the number of desired DMA cycles, load the value N-1 into the low-order 14-bits of the terminal count register. The most significant two bits of the terminal count register specify the type of DMA operation for that channel.

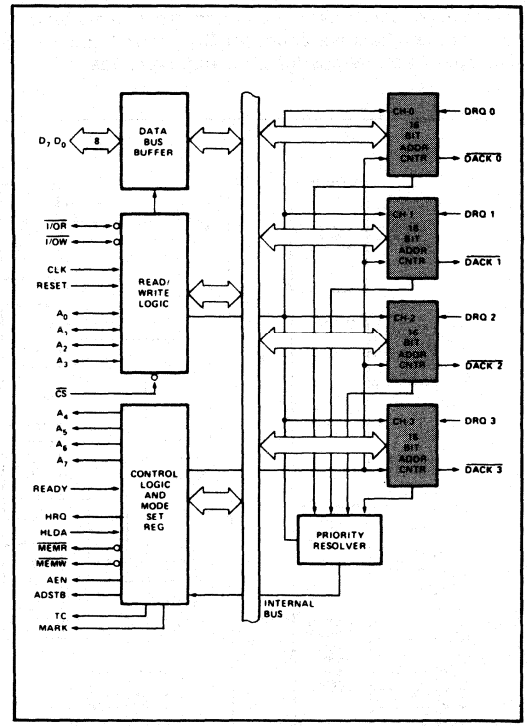

Figure 3. 8257 Block Diagram Showing DMA Channels

These two bits are not modified during a DMA cycle, but can be changed between DMA blocks.

Each channel accepts a DMA Request (DRQn) input and provides a DMA Acknowledge (DACKn) output.

(DRQ 0-DRQ 3)

DMA Request: These are individual asynchronous channel request inputs used by the peripherals to obtain a DMA cycle. If not in the rotating priority mode then DRQ 0 has the highest priority and DRQ 3 has the lowest. A request can be generated by raising the request line and holding it high until DMA acknowledge. For multiple DMA cycles (Burst Mode) the request line is held high until the DMA acknowledge of the last cycle arrives.

($\overline{\text{DACK}}$ 0 - $\overline{\text{DACK}}$ 3)

DMA Acknowledge: An active low level on the acknowledge output informs the peripheral connected to that channel that it has been selected for a DMA cycle. The $\overline{\text{DACK}}$ output acts as a "chip select" for the peripheral device requesting service. This line goes active (low) and inactive (high) once for each byte transferred even if a burst of data is being transferred.

2. Data Bus Buffer

This three-state, bi-directional, eight bit buffer interfaces the 8257 to the system data bus.

(D_0-D_7)

Data Bus Lines: These are bi-directional three-state lines. When the 8257 is being programmed by the CPU, eight-bits of data for a DMA address register, a terminal count register or the Mode Set register are received on the data bus. When the CPU reads a DMA address register, a terminal count register or the Status register, the data is sent to the CPU over the data bus. During DMA cycles (when the 8257 is the bus master), the 8257 will output the most significant eight-bits of the memory address (from one of the DMA address registers) to the 8212 latch via the data bus. These address bits will be transferred at the beginning of the DMA cycle; the bus will then be released to handle the memory data transfer during the balance of the DMA cycle.

BIT 15	BIT 14	TYPE OF DMA OPERATION
0	0	Verify DMA Cycle
0	1	Write DMA Cycle
1	0	Read DMA Cycle
1	1	(Illegal)

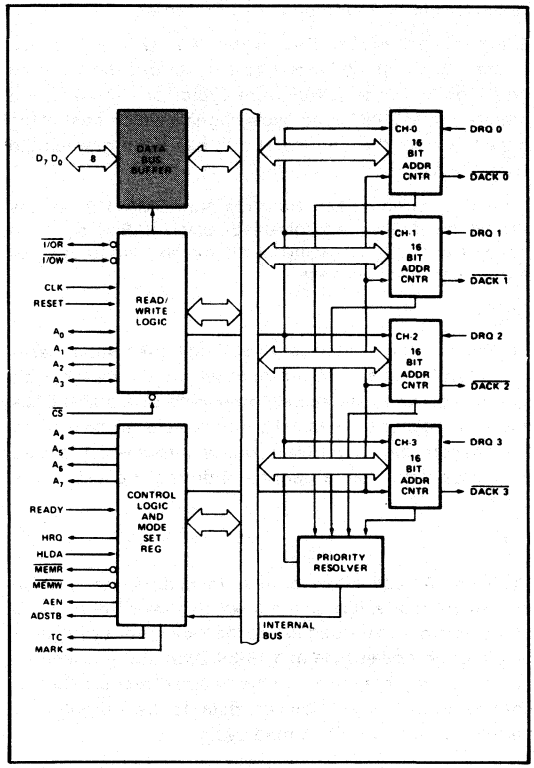

Figure 4. 8257 Block Diagram Showing Data Bus Buffer

3. Read/Write Logic

When the CPU is programming or reading one of the 8257's registers (i.e., when the 8257 is a "slave" device on the system bus), the Read/Write Logic accepts the I/O Read ($\overline{I/OR}$) or I/O Write ($\overline{I/OW}$) signal, decodes the least significant four address bits, (A_0-A_3), and either writes the contents of the data bus into the addressed register (if $\overline{I/OW}$ is true) or places the contents of the addressed register onto the data bus (if $\overline{I/OR}$ is true).

During DMA cycles (i.e., when the 8257 is the bus "master"), the Read/Write Logic generates the I/O read and memory write (DMA write cycle) or I/O Write and memory read (DMA read cycle) signals which control the data link with the peripheral that has been granted the DMA cycle.

Note that during DMA transfers Non-DMA I/O devices should be de-selected (disabled) using "AEN" signal to inhibit I/O device decoding of the memory address as an erroneous device address.

($\overline{I/OR}$)

I/O Read: An active-low, bi-directional three-state line. In the "slave" mode, it is an input which allows the 8-bit status register or the upper/lower byte of a 16-bit DMA address register or terminal count register to be read. In the "master" mode, $\overline{I/OR}$ is a control output which is used to access data from a peripheral during the DMA write cycle.

($\overline{I/OW}$)

I/O Write: An active-low, bi-directional three-state line. In the "slave" mode, it is an input which allows the contents of the data bus to be loaded into the 8-bit mode set register or the upper/lower byte of a 16-bit DMA address register or terminal count register. In the "master" mode, $\overline{I/OW}$ is a control output which allows data to be output to a peripheral during a DMA read cycle.

(CLK)

Clock Input: Generally from an Intel® 8224 Clock Generator device. (ϕ2 TTL) or Intel® 8085A CLK output.

(RESET)

Reset: An asynchronous input (generally from an 8224 or 8085 device) which disables all DMA channels by clearing the mode register and 3-states all control lines.

(A_0-A_3)

Address Lines: These least significant four address lines are bi-directional. In the "slave" mode they are inputs which select one of the registers to be read or programmed. In the "master" mode, they are outputs which constitute the least significant four bits of the 16-bit memory address generated by the 8257.

($\overline{CS}$)

Chip Select: An active-low input which enables the I/O Read or I/O Write input when the 8257 is being read or programmed in the "slave" mode. In the "master" mode, $\overline{CS}$ is automatically disabled to prevent the chip from selecting itself while performing the DMA function.

4. Control Logic

This block controls the sequence of operations during all DMA cycles by generating the appropriate control signals and the 16-bit address that specifies the memory location to be accessed.

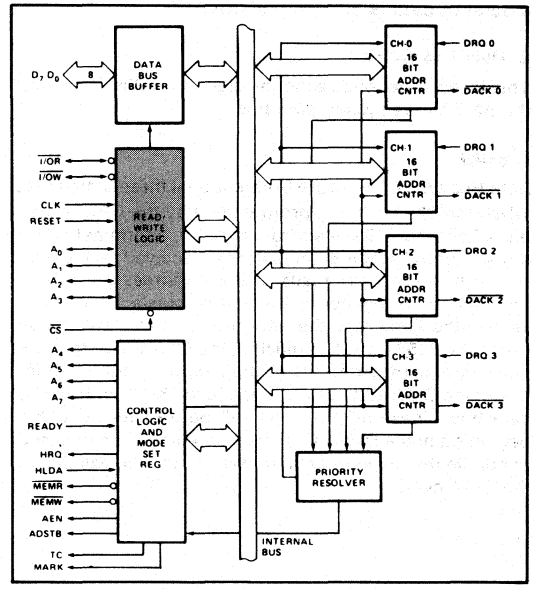

Figure 5. 8257 Block Diagram Showing Read/Write Logic Function

(A_4-A_7)

Address Lines: These four address lines are three-state outputs which constitute bits 4 through 7 of the 16-bit memory address generated by the 8257 during all DMA cycles.

(READY)

Ready: This asynchronous input is used to elongate the memory read and write cycles in the 8257 with wait states if the selected memory requires longer cycles. READY must conform to specified setup and hold times.

(HRQ)

Hold Request: This output requests control of the system bus. In systems with only one 8257, HRQ will normally be applied to the HOLD input on the CPU. HRQ must conform to specified setup and hold times.

(HLDA)

Hold Acknowledge: This input from the CPU indicates that the 8257 has acquired control of the system bus.

($\overline{MEMR}$)

Memory Read: This active-low three-state output is used to read data from the addressed memory location during DMA Read cycles.

($\overline{MEMW}$)

Memory Write: This active-low three-state output is used to write data into the addressed memory location during DMA Write cycles.

(ADSTB)

Address Strobe: This output strobes the most significant byte of the memory address into the 8212 device from the data bus.

(AEN)

Address Enable: This output is used to disable (float) the System Data Bus and the System Control Bus. It may also be used to disable (float) the System Address Bus by use of an enable on the Address Bus drivers in systems to inhibit non-DMA devices from responding during DMA cycles. It may be further used to isolate the 8257 data bus from the System Data Bus to facilitate the transfer of the 8 most significant DMA address bits over the 8257 data I/O pins without subjecting the System Data Bus to any timing constraints for the transfer. When the 8257 is used in an I/O device structure (as opposed to memory mapped), this AEN output should be used to disable the selection of an I/O device when the DMA address is on the address bus. The I/O device selection should be determined by the DMA acknowledge outputs for the 4 channels.

(TC)

Terminal Count: This output notifies the currently selected peripheral that the present DMA cycle should be the last cycle for this data block. If the TC STOP bit in the Mode Set register is set, the selected channel will be automatically disabled at the end of that DMA cycle. TC is activated when the 14-bit value in the selected channel's terminal count register equals zero. Recall that the low-order 14-bits of the terminal count register should be loaded with the values (n-1), where n = the desired number of the DMA cycles.

(MARK)

Modulo 128 Mark: This output notifies the selected peripheral that the current DMA cycle is the 128th cycle since the previous MARK output. MARK always occurs at 128 (and all multiples of 128) cycles from the end of the data block. Only if the total number of DMA cycles (n) is evenly divisable by 128 (and the terminal count register was loaded with n-1), will MARK occur at 128 (and each succeeding multiple of 128) cycles from the beginning of the data block.

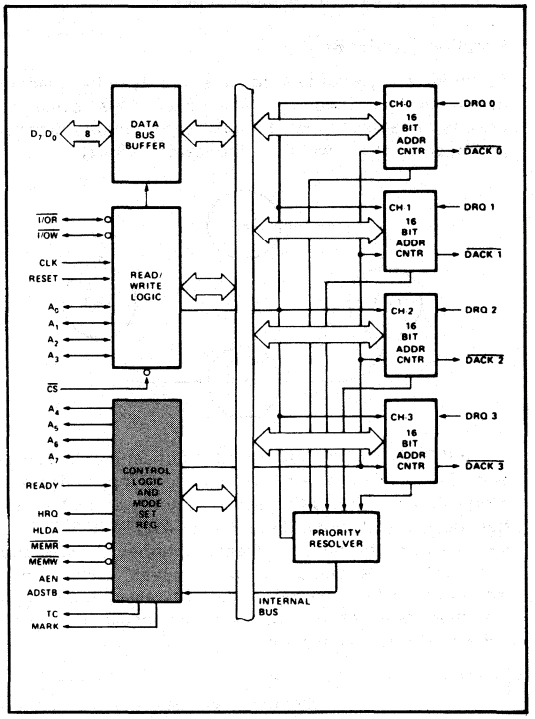

Figure 6. 8257 Block Diagram Showing Control Logic and Mode Set Register

5. Mode Set Register

When set, the various bits in the Mode Set register enable each of the four DMA channels, and allow four different options for the 8257:

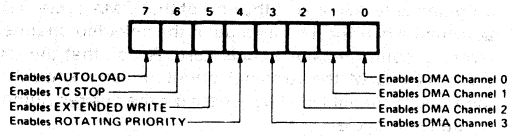

The Mode Set register is normally programmed by the CPU after the DMA address register(s) and terminal count register(s) are initialized. The Mode Set Register is cleared by the RESET input, thus disabling all options, inhibiting all channels, and preventing bus conflicts on power-up. A channel should not be left enabled unless its DMA address and terminal count registers contain valid values; otherwise, an inadvertent DMA request (DRQn) from a peripheral could initiate a DMA cycle that would destroy memory data.

The various options which can be enabled by bits in the Mode Set register are explained below:

Rotating Priority Bit 4

In the Rotating Priority Mode, the priority of the channels has a circular sequence. After each DMA cycle, the priority of each channel changes. The channel which had just been serviced will have the lowest priority.

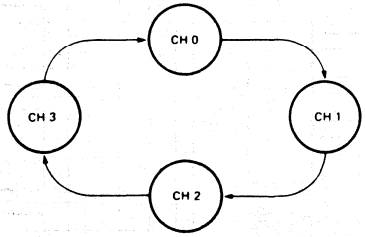

If the ROTATING PRIORITY bit is not set (set to a zero), each DMA channel has a fixed priority. In the fixed priority mode, Channel 0 has the highest priority and Channel 3 has the lowest priority. If the ROTATING PRIORITY bit is set to a one, the priority of each channel changes after each DMA cycle (not each DMA request). Each channel moves up to the next highest priority assignment, while the channel which has just been serviced moves to the lowest priority assignment:

	CHANNEL→ JUST SERVICED	CH-0	CH-1	CH-2	CH-3
Priority → Assignments	Highest	CH-1	CH-2	CH-3	CH-0
	↑	CH-2	CH-3	CH-0	CH-1
	↓	CH-3	CH-0	CH-1	CH-2
	Lowest	CH-0	CH-1	CH-2	CH-3

Note that rotating priority will prevent any one channel from monopolizing the DMA mode; consecutive DMA cycles will service different channels if more than one channel is enabled and requesting service. There is no overhead penalty associated with this mode of operation. All DMA operations began with Channel 0 initially assigned to the highest priority for the first DMA cycle.

Extended Write Bit 5

If the EXTENDED WRITE bit is set, the duration of both the $\overline{\text{MEMW}}$ and $\overline{\text{I/OW}}$ signals is extended by activating them earlier in the DMA cycle. Data transfers within microcomputer systems proceed asynchronously to allow use of various types of memory and I/O devices with different access times. If a device cannot be accessed within a specific amount of time it returns a "not ready" indication to the 8257 that causes the 8257 to insert one or more wait states in its internal sequencing. Some devices are fast enough to be accessed without the use of wait states, but if they generate their READY response with the leading edge of the $\overline{\text{I/OW}}$ or $\overline{\text{MEMW}}$ signal (which generally occurs late in the transfer sequence), they would normally cause the 8257 to enter a wait state because it does not receive READY in time. For systems with these types of devices, the Extended Write option provides alternative timing for the I/O and memory write signals which allows the devices to return an early READY and prevents the unnecessary occurrence of wait states in the 8257, thus increasing system throughput.

TC Stop Bit 6

If the TC STOP bit is set, a channel is disabled (i.e., its enable bit is reset) after the Terminal Count (TC) output goes true, thus automatically preventing further DMA operation on that channel. The enable bit for that channel must be re-programmed to continue or begin another DMA operation. If the TC STOP bit is not set, the occurrence of the TC output has no effect on the channel enable bits. In this case, it is generally the responsibility of the peripheral to cease DMA requests in order to terminate a DMA operation.

Auto Load Bit 7

The Auto Load mode permits Channel 2 to be used for repeat block or block chaining operations, without immediate software intervention between blocks. Channel 2 registers are initialized as usual for the first data block; Channel 3 registers, however, are used to store the block re-initialization parameters (DMA starting address, terminal count and DMA transfer mode). After the first block of DMA cycles is executed by Channel 2 (i.e., after the TC output goes true), the parameters stored in the Channel 3 registers are transferred to Channel 2 during an "update" cycle. Note that the TC STOP feature, described above, has no effect on Channel 2 when the Auto Load bit is set.

If the Auto Load bit is set, the initial parameters for Channel 2 are automatically duplicated in the Channel 3 registers when Channel 2 is programmed. This permits repeat block operations to be set up with the programming of a single channel. Repeat block operations can be used in applications such as CRT refreshing. Channels 2 and 3 can still be loaded with separate values if Channel 2 is loaded before loading Channel 3. Note that in the Auto Load mode, Channel 3 is still available to the user if the Channel 3 enable bit is set, but use of this channel will change the values to be auto loaded into Channel 2 at update time. All that is necessary to use the Auto Load feature for chaining operations is to reload Channel 3 registers at the conclusion of each update cycle with the new parameters for the next data block transfer.

Each time that the 8257 enters an update cycle, the update flag in the status register is set and parameters in Channel 3 are transferred to Channel 2, non-destructively for Channel 3. The actual re-initialization of Channel 2 occurs at the beginning of the next channel 2 DMA cycle after the TC cycle. This will be the first DMA cycle of the new data block for Channel 2. The update flag is cleared at the conclusion of this DMA cycle. For chaining operations, the update flag in the status register can be monitored by the CPU to determine when the re-initialization process has been completed so that the next block parameters can be safely loaded into Channel 3.

6. Status Register

The eight-bit status register indicates which channels have reached a terminal count condition and includes the update flag described previously.

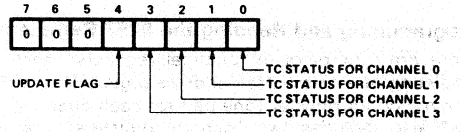

The TC status bits are set when the Terminal Count (TC) output is activated for that channel. These bits remain set until the status register is read or the 8257 is reset. The UPDATE FLAG, however, is not affected by a status register read operation. The UPDATE FLAG can be cleared by resetting the 8257, by changing to the non-auto load mode (i.e., by resetting the AUTO LOAD bit in the Mode Set register) or it can be left to clear itself at the completion of the update cycle. The purpose of the UPDATE FLAG is to prevent the CPU from inadvertently skipping a data block by overwriting a starting address or terminal count in the Channel 3 registers before those parameters are properly auto-loaded into Channel 2.

The user is cautioned against reading the TC status register and using this information to reenable channels that have not completed operation. Unless the DMA channels are inhibited a channel could reach terminal count (TC) between the status read and the mode write. DMA can be inhibited by a hardware gate on the HRQ line or by disabling channels with a mode word before reading the TC status.

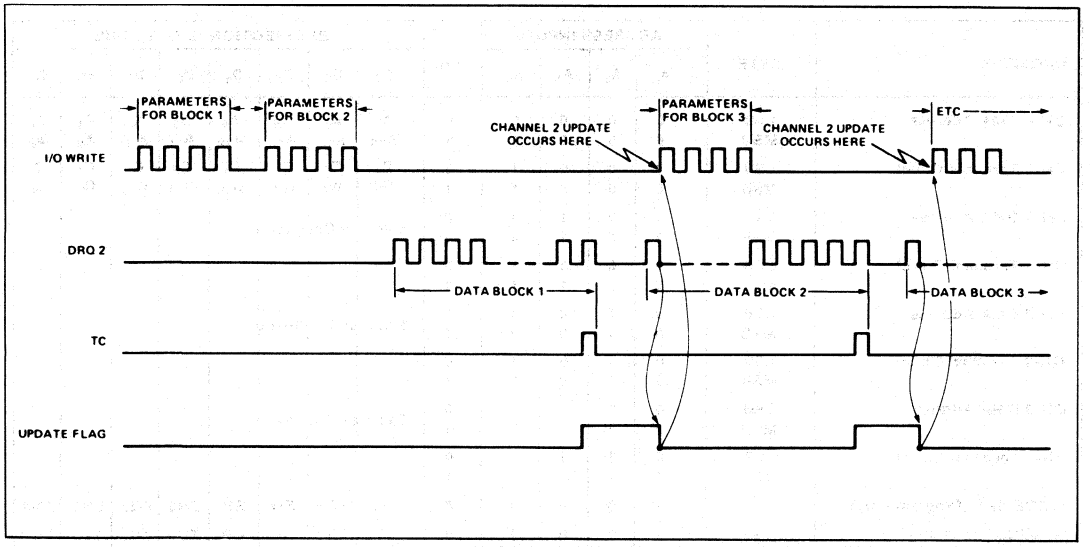

Figure 7. Autoload Timing

OPERATIONAL SUMMARY

Programming and Reading the 8257 Registers

There are four pairs of "channel registers": each pair consisting of a 16-bit DMA address register and a 16-bit terminal count register (one pair for each channel). The 8257 also includes two "general registers": one 8-bit Mode Set register and one 8-bit Status register. The registers are loaded or read when the CPU executes a write or read instruction that addresses the 8257 device and the appropriate register within the 8257. The 8228 generates the appropriate read or write control signal (generally I/OR or I/OW while the CPU places a 16-bit address on the system address bus, and either outputs the data to be written onto the system data bus or accepts the data being read from the data bus. All or some of the most significant 12 address bits A_4-A_{15} (depending on the systems memory, I/O configuration) are usually decoded to produce the chip select ($\overline{CS}$) input to the 8257. An I/O Write input (or Memory Write in memory mapped I/O configurations, described below) specifies that the addressed register is to be programmed, while an I/O Read input (or Memory Read) specifies that the addressed register is to be read. Address bit 3 specifies whether a "channel register" ($A_3 = 0$) or the Mode Set (program only)/Status (read only) register ($A_3 = 1$) is to be accessed.

The least significant three address bits, A_0-A_2, indicate the specific register to be accessed. When accessing the Mode Set or Status register, A_0-A_2 are all zero. When accessing a channel register bit A_0 differentiates between the DMA address register ($A_0 = 0$) and the terminal count register ($A_0 = 1$), while bits A_1 and A_2 specify one of the four channels. Because the "channel registers" are 16-bits, two program instruction cycles are required to load or read an entire register. The 8257 contains a first/last (F/L) flip flop which toggles at the completion of each channel program or read operation. The F/L flip flop determines whether the upper or lower byte of the register is to be accessed. The F/L flip flop is reset by the RESET input and whenever the Mode Set register is loaded. To maintain proper synchronization when accessing the "channel registers" all channel command instruction operations should occur in pairs, with the lower byte of a register always being accessed first. Do not allow $\overline{CS}$ to clock while either $\overline{I/OR}$ or $\overline{I/OW}$ is active, as this will cause an erroneous F/L flip flop state. In systems utilizing an interrupt structure, interrupts should be disabled prior to any paired programming operations to prevent an interrupt from splitting them. The result of such a split would leave the F/L F/F in the wrong state. This problem is particularly obvious when other DMA channels are programmed by an interrupt structure.

CONTROL INPUT	$\overline{CS}$	$\overline{I/OW}$	$\overline{I/OR}$	A_3
Program Half of a Channel Register	0	0	1	0
Read Half of a Channel Register	0	1	0	0
Program Mode Set Register	0	0	1	1
Read Status Register	0	1	0	1

8257 Register Selection

REGISTER	BYTE	ADDRESS INPUTS				F/L	*BI-DIRECTIONAL DATA BUS							
		A_3	A_2	A_1	A_0		D_7	D_6	D_5	D_4	D_3	D_2	D_1	D_0
CH-0 DMA Address	LSB	0	0	0	0	0	A_7	A_6	A_5	A_4	A_3	A_2	A_1	A_0
	MSB	0	0	0	0	1	A_{15}	A_{14}	A_{13}	A_{12}	A_{11}	A_{10}	A_9	A_8
CH-0 Terminal Count	LSB	0	0	0	1	0	C_7	C_6	C_5	C_4	C_3	C_2	C_1	C_0
	MSB	0	0	0	1	1	Rd	Wr	C_{13}	C_{12}	C_{11}	C_{10}	C_9	C_8
CH-1 DMA Address	LSB	0	0	1	0	0	Same as Channel 0							
	MSB	0	0	1	0	1								
CH-1 Terminal Count	LSB	0	0	1	1	0								
	MSB	0	0	1	1	1								
CH-2 DMA Address	LSB	0	1	0	0	0	Same as Channel 0							
	MSB	0	1	0	0	1								
CH-2 Terminal Count	LSB	0	1	0	1	0								
	MSB	0	1	0	1	1								
CH-3 DMA Address	LSB	0	1	1	0	0	Same as Channel 0							
	MSB	0	1	1	0	1								
CH-3 Terminal Count	LSB	0	1	1	1	0								
	MSB	0	1	1	1	1								
MODE SET (Program only)	—	1	0	0	0	0	AL	TCS	EW	RP	EN3	EN2	EN1	EN0
STATUS (Read only)	—	1	0	0	0	0	0	0	0	UP	TC3	TC2	TC1	TC0

*A_0-A_{15}: DMA Starting Address, C_0-C_{13}: Terminal Count value (N-1), Rd and Wr: DMA Verify (00), Write (01) or Read (10) cycle selection, AL: Auto Load, TCS: TC STOP, EW: EXTENDED WRITE, RP: ROTATING PRIORITY, EN3-EN0: CHANNEL ENABLE MASK, UP: UPDATE FLAG, TC3-TC0: TERMINAL COUNT STATUS BITS.

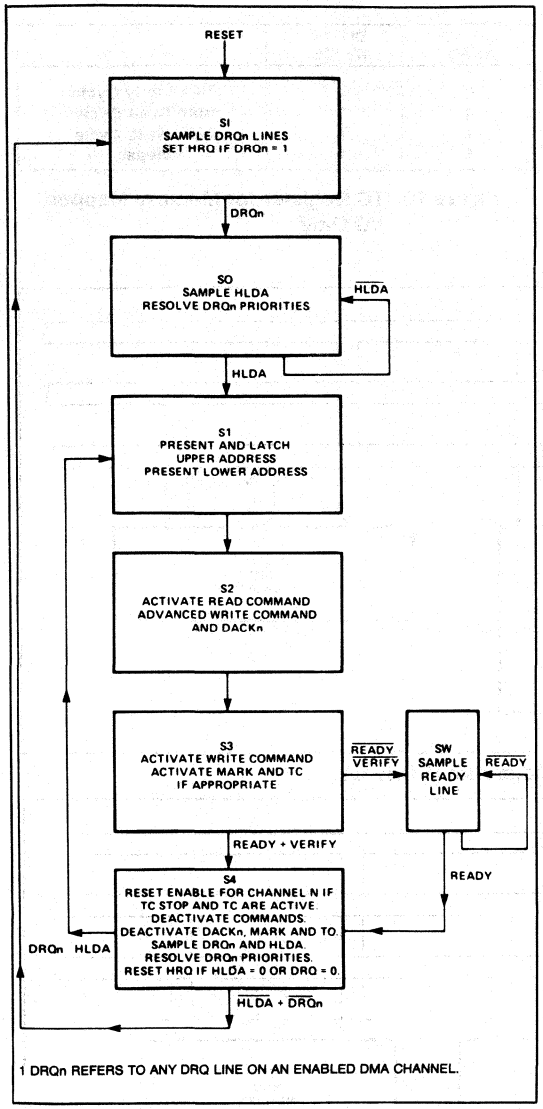

Figure 8. DMA Operation State Diagram

DMA OPERATION

Single Byte Transfers

A single byte transfer is initiated by the I/O device raising the DRQ line of one channel of the 8257. If the channel is enabled, the 8257 will output a HRQ to the CPU. The 8257 now waits until a HLDA is received insuring that the system bus is free for its use. Once HLDA is received the $\overline{DACK}$ line for the requesting channel is activated (LOW). The $\overline{DACK}$ line acts as a chip select for the requesting I/O device. The 8257 then generates the read and write commands and byte transfer occurs between the selected I/O device and memory. After the transfer is complete, the $\overline{DACK}$ line is set HIGH and the HRQ line is set LOW to indicate to the CPU that the bus is now free for use. DRQ must remain HIGH until $\overline{DACK}$ is issued to be recognized and must go LOW before S4 of the transfer sequence to prevent another transfer from occuring. (See timing diagram.)

Consecutive Transfers

If more than one channel requests service simultaneously, the transfer will occur in the same way a burst does. No overhead is incurred by switching from one channel to another. In each S4 the DRQ lines are sampled and the highest priority request is recognized during the next transfer. A burst mode transfer in a lower priority channel will be overridden by a higher priority request. Once the high priority transfer has completed control will return to the lower priority channel if its DRQ is still active. No extra cycles are needed to execute this sequence and the HRQ line remains active until all DRQ lines go LOW.

Control Override

The continuous DMA transfer mode described above can be interrupted by an external device by lowering the HLDA line. After each DMA transfer the 8257 samples the HLDA line to insure that it is still active. If it is not active, the 8257 completes the current transfer, releases the HRQ line (LOW) and returns to the idle state. If DRQ lines are still active the 8257 will raise the HRQ line in the third cycle and proceed normally. (See timing diagram.)

Not Ready

The 8257 has a Ready input similar to the 8080A and the 8085A. The Ready line is sampled in State 3. If Ready is LOW the 8257 enters a wait state. Ready is sampled during every wait state. When Ready returns HIGH the 8257 proceeds to State 4 to complete the transfer. Ready is used to interface memory or I/O devices that cannot meet the bus set up times required by the 8257.

Speed

The 8257 uses four clock cycles to transfer a byte of data. No cycles are lost in the master to master transfer maximizing bus efficiency. A 2MHz clock input will allow the 8257 to transfer at a rate of 500K bytes/second.

Memory Mapped I/O Configurations

The 8257 can be connected to the system bus as a memory device instead of as an I/O device for memory mapped I/O configurations by connecting the system memory control lines to the 8257's I/O control lines and the system I/O control lines to the 8257's memory control lines.

This configuration permits use of the 8080's considerably larger repertoire of memory instructions when reading or loading the 8257's registers. Note that with this connection, the programming of the Read (bit 15) and Write (bit 14) bits in the terminal count register will have a different meaning.

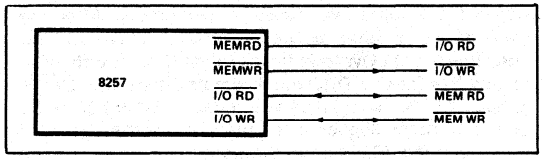

Figure 9. System Interface for Memory Mapped I/O

BIT 15 READ	BIT 14 WRITE	
0	0	DMA Verify Cycle
0	1	DMA Read Cycle
1	0	DMA Write Cycle
1	1	Illegal

Figure 10. TC Register for Memory Mapped I/O Only

SYSTEM APPLICATION EXAMPLES

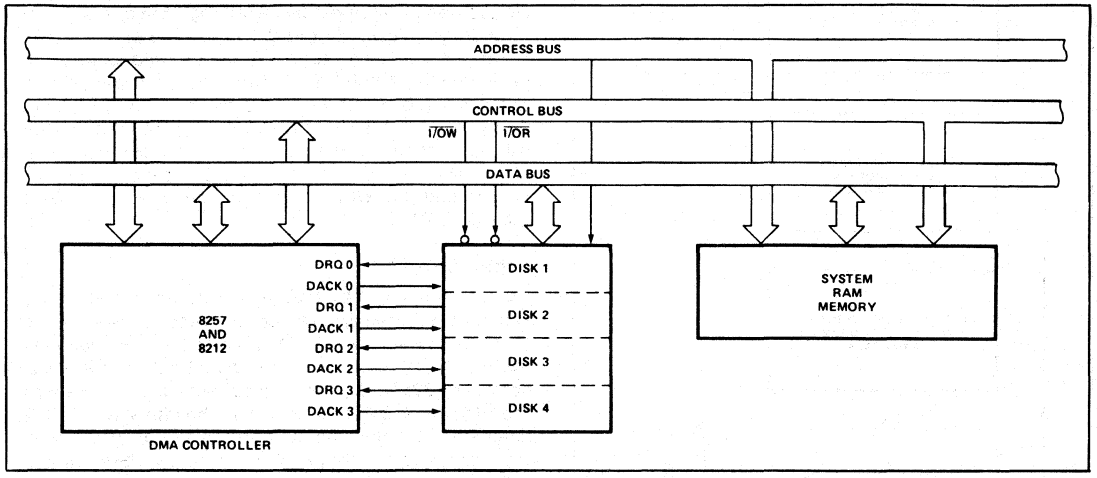

Figure 11. Floppy Disk Controller (4 Drives)

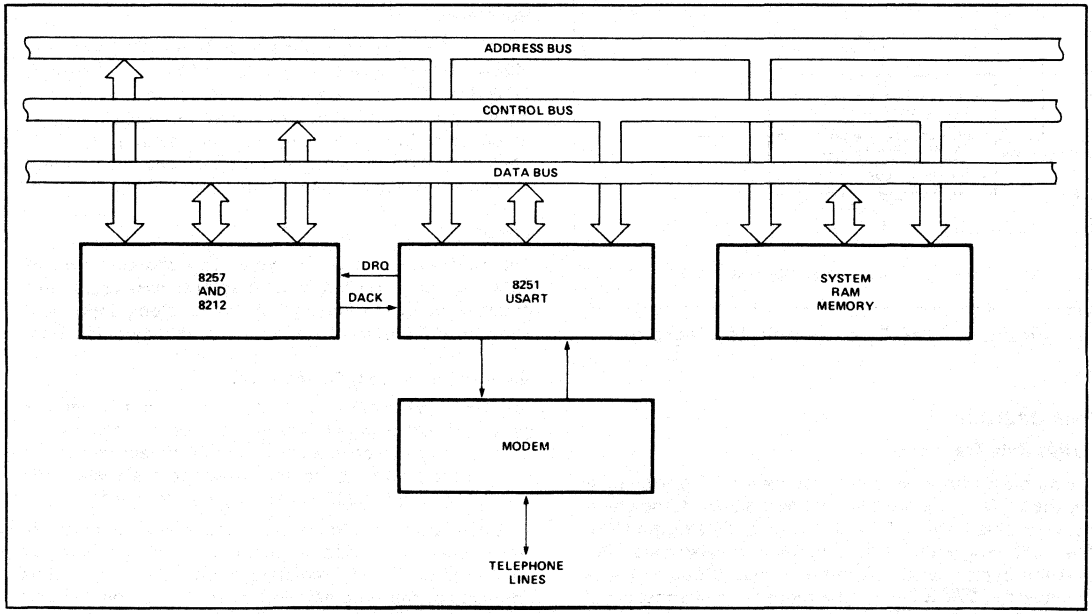

Figure 12. High-Speed Communication Controller

A.C. TESTING INPUT, OUTPUT WAVEFORM

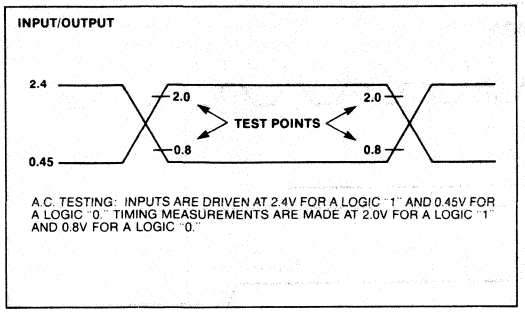

A.C. TESTING LOAD CIRCUIT

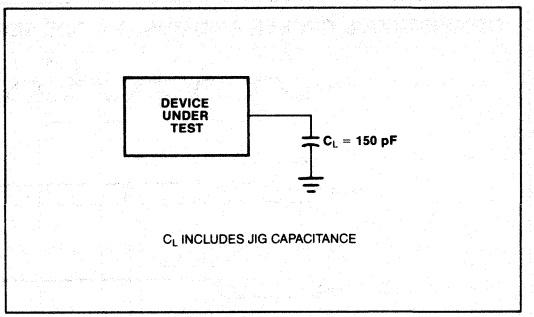

Tracking Parameters

Signals labeled as Tracking Parameters (footnotes 1 and 5-7 under A.C. Specifications) are signals that follow similar paths through the silicon die. The propagation speed of these signals varies in the manufacturing process but the relationship between all these parameters is constant. The variation is less than or equal to 50 ns.

Suppose the following timing equation is being evaluated,

$$T_{A(MIN)} + T_{B(MAX)} \leq 150 \text{ ns}$$

and only minimum specifications exist for T_A and T_B. If $T_{A(MIN)}$ is used, and if T_A and T_B are tracking parameters, $T_{B(MAX)}$ can be taken as $T_{B(MIN)}$ + 50 ns.

$$T_{A(MIN)} + (T_{B(MIN)}^{*} + 50 \text{ ns}) \leq 150 \text{ ns}$$

*if T_A and T_B are tracking parameters

WAVEFORMS—PERIPHERAL MODE

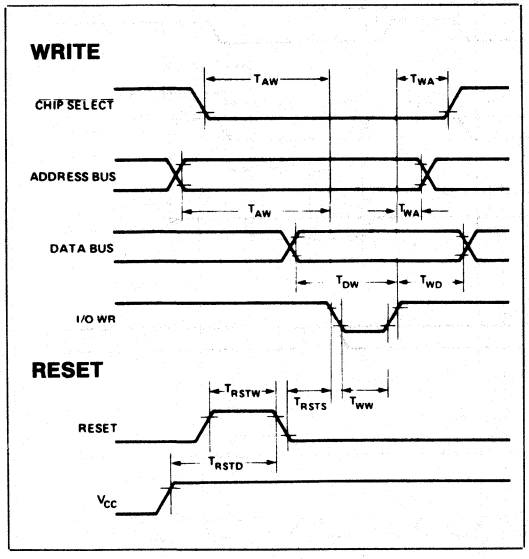

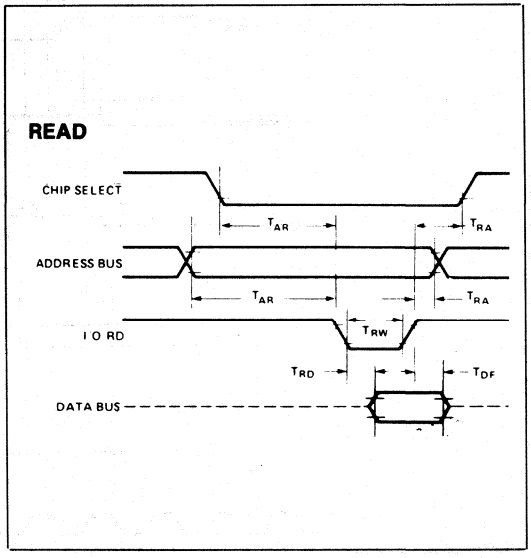

WAVEFORMS—DMA

CONSECUTIVE CYCLES AND BURST MODE SEQUENCE

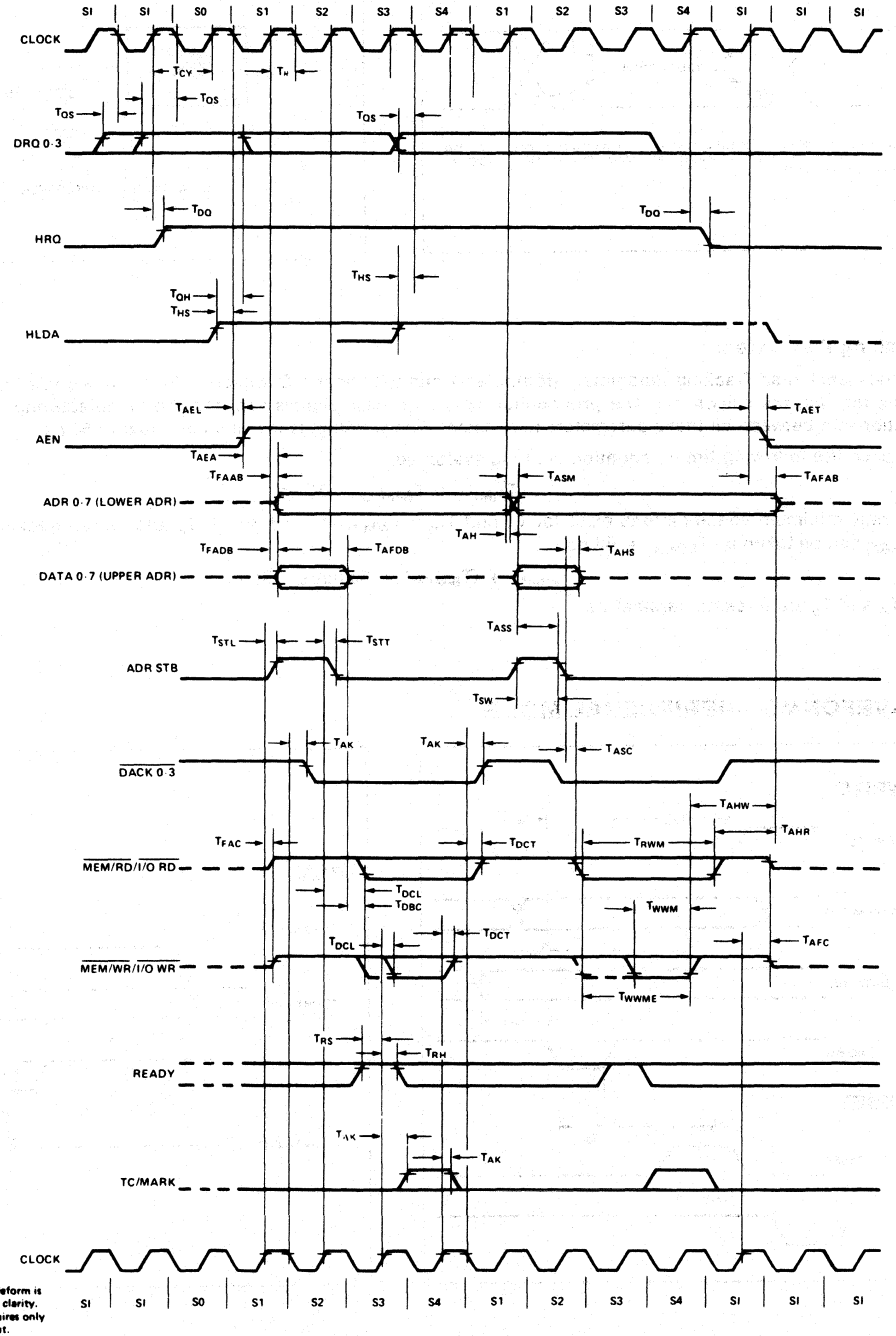

NOTE: The clock waveform is duplicated for clarity. The 8257 requires only one clock input.

WAVEFORMS (Continued)

CONTROL OVERRIDE SEQUENCE

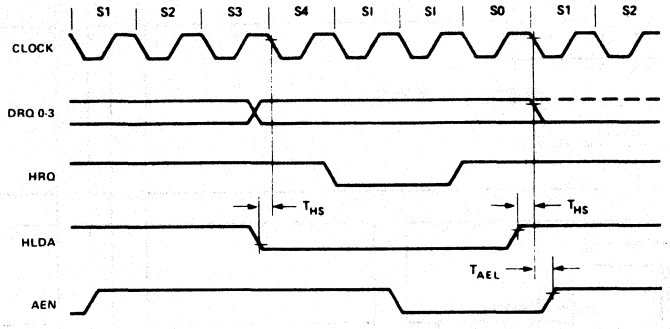

NOT READY SEQUENCE

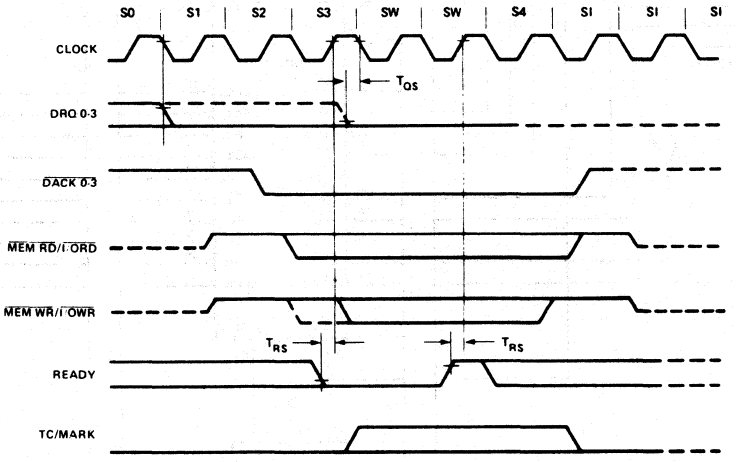

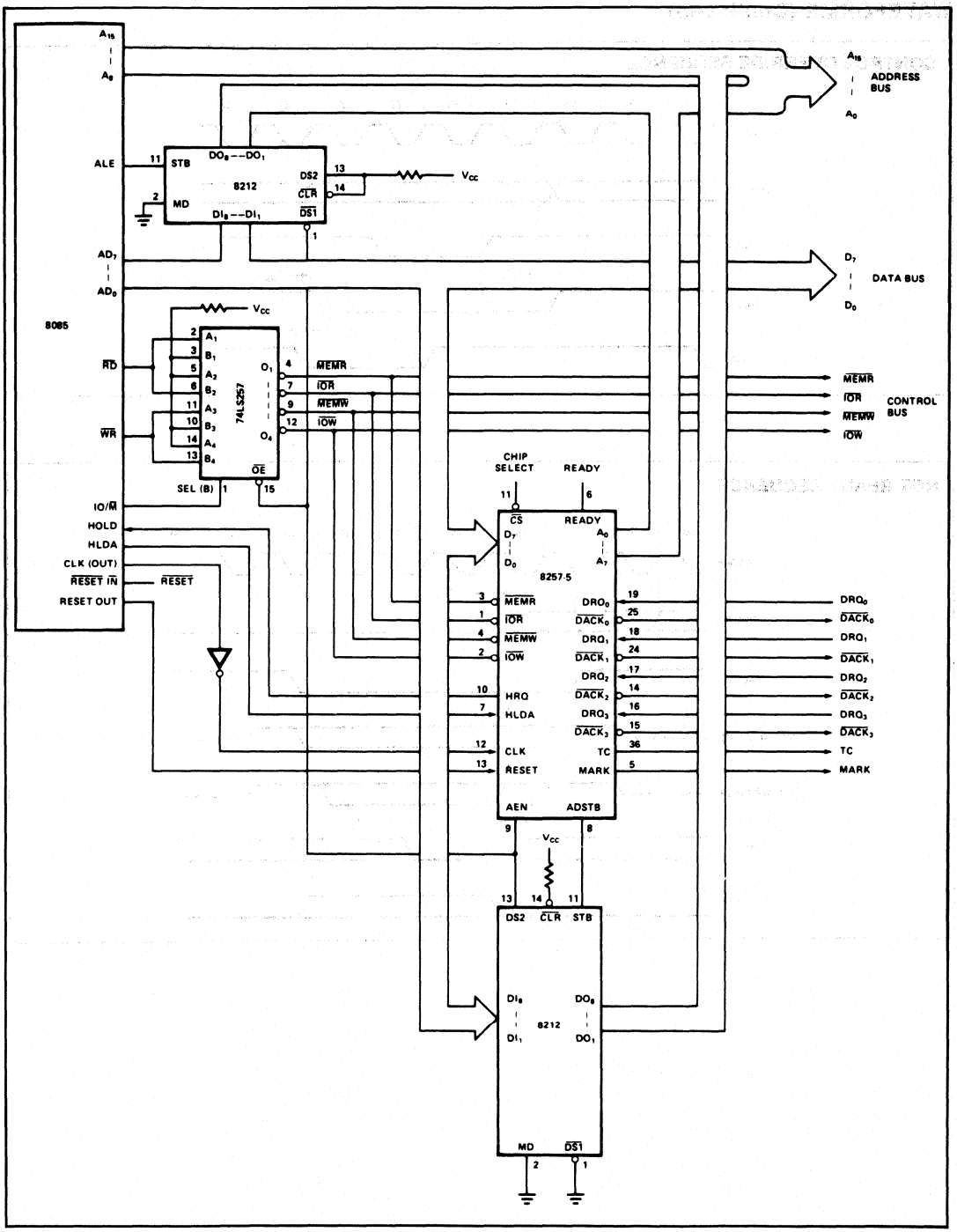

Figure 13. Detailed System Interface Schematic

ABSOLUTE MAXIMUM RATINGS*

Ambient Temperature Under Bias ..... 0°C to 70°C
Storage Temperature ..... −65°C to +150°C
Voltage on Any Pin
With Respect to Ground ..... −0.5V to +7V
Power Dissipation ..... 1 Watt

**NOTICE: Stresses above those listed under "Absolute Maximum Ratings" may cause permanent damage to the device. This is a stress rating only and functional operation of the device at these or any other conditions above those indicated in the operational sections of this specification is not implied. Exposure to absolute maximum rating conditions for extended periods may affect device reliability.*

D.C. CHARACTERISTICS

(8257: T_A = 0°C to 70°C, V_{CC} = 5.0V ±5%, GND = 0V)
(8257-5: T_A = 0°C to 70°C, V_{CC} = 5.0V ±10%, GND = 0V)

Symbol	Parameter	Min.	Max.	Unit	Test Conditions
V_{IL}	Input Low Voltage	-0.5	0.8	Volts	
V_{IH}	Input High Voltage	2.0	V_{CC}+.5	Volts	
V_{OL}	Output Low Voltage		0.45	Volts	I_{OL} = 1.6 mA
V_{OH}	Output High Voltage	2.4	V_{CC}	Volts	I_{OH}=-150μA for AB, DB and AEN I_{OH}=-80μA for others
V_{HH}	HRQ Output High Voltage	3.3	V_{CC}	Volts	I_{OH} = -80μA
I_{CC}	V_{CC} Current Drain		120	mA	
I_{IL}	Input Leakage		±10	μA	$0V \leq V_{IN} \leq V_{CC}$
I_{OFL}	Output Leakage During Float		±10	μA	$0.45V \leq V_{OUT} \leq V_{CC}$

CAPACITANCE

(T_A = 25°C; V_{CC} = GND = 0V)

Symbol	Parameter	Min.	Typ.	Max.	Unit	Test Conditions
C_{IN}	Input Capacitance			10	pF	fc = 1MHz
$C_{I/O}$	I/O Capacitance			20	pF	Unmeasured pins returned to GND

A.C. CHARACTERISTICS—PERIPHERAL (SLAVE) MODE

(8257: T_A = 0°C to 70°C, V_{CC} = 5.0V ±5%, GND = 0V)
(8257-5: T_A = 0°C to 70°C, V_{CC} = 5.0V ±10%, GND = 0V)

8080 Bus Parameters

READ CYCLE

Symbol	Parameter	8257		8257-5		Unit	Test Conditions
		Min.	Max.	Min.	Max.		
T_{AR}	Adr or $\overline{CS}\downarrow$ Setup to $\overline{RD}\downarrow$	0		0		ns	
T_{RA}	Adr or $\overline{CS}\uparrow$ Hold from $\overline{RD}\uparrow$	0		0		ns	
T_{RD}	Data Access from $\overline{RD}\downarrow$	0	300	0	220	ns	
T_{DF}	DB→Float Delay from $\overline{RD}\uparrow$	20	150	20	120	ns	
T_{RR}	$\overline{RD}$ Width	250		250		ns	

WRITE CYCLE

Symbol	Parameter	8257		8257-5		Unit	Test Conditions
		Min.	Max.	Min.	Max.		
T_{AW}	Adr Setup to $\overline{WR}\downarrow$	20		20		ns	
T_{WA}	Adr Hold from $\overline{WR}\uparrow$	0		0		ns	
T_{DW}	Data Setup to $\overline{WR}\uparrow$	200		200		ns	
T_{WD}	Data Hold from $\overline{WR}\uparrow$	0		0		ns	
T_{WW}	$\overline{WR}$ Width	200		200		ns	

OTHER TIMING

Symbol	Parameter	8257		8257-5		Unit	Test Conditions
		Min.	Max.	Min.	Max.		
T_{RSTW}	Reset Pulse Width	300		300		ns	
T_{RSTD}	Power Supply↑ (V_{CC}) Setup to Reset↓	500		500		μs	
T_r	Signal Rise Time		20		20	ns	
T_f	Signal Fall Time		20		20	ns	
T_{RSTS}	Reset to First $\overline{I/O}\overline{WR}$	2		2		t_{CY}	

A.C. CHARACTERISTICS—DMA (MASTER) MODE

(8257: T_A = 0°C to 70°C, V_{CC} = 5.0V ±5%, GND = 0V)
(8257-5: T_A = 0°C to 70°C, V_{CC} = 5.0V ±10%, GND = 0V)

TIMING REQUIREMENTS

Symbol	Parameter	8257		8257-5		Unit
		Min.	Max.	Min.	Max.	
T_{CY}	Cycle Time (Period)	0.320	4	0.320	4	μs
T_θ	Clock Active (High)	120	$.8T_{CY}$	80	$.8T_{CY}$	ns
T_{QS}	DRQ↑ Setup to CLK↓ (S1, S4)	120		120		ns
T_{QH}	DRQ↓ Hold from HLDA↑[1]	0		0		ns
T_{HS}	HLDA↑ or ↓Setup to CLK↓(S1, S4)	100		100		ns
T_{RS}	READY Setup Time to CLK↑(S3, Sw)	30		30		ns
T_{RH}	READY Hold Time from CLK↑(S3, Sw)	20		20		ns

A.C. CHARACTERISTICS—DMA (MASTER) MODE

(8257: T_A = 0°C to 70°C, V_{CC} = 5.0V ±5%, GND = 0V)
(8257-5: T_A = 0°C to 70°C, V_{CC} = 5.0V ±10%, GND = 0V)

TIMING RESPONSES

Symbol	Parameter	8257		8257-5		Unit
		Min.	Max.	Min.	Max.	
T_{DQ}	HRQ↑ or ↓Delay from CLK↑ (SI, S4) (measured at 2.0V)		160		160	ns
T_{DQ1}	HRQ↑ or ↓Delay from CLK↑ (SI, S4) (measured at 3.3V)[3]		250		250	ns
T_{AEL}	AEN↑ Delay from CLK↓ (S1)		300		300	ns
T_{AET}	AEN↓ Delay from CLK↑ (SI)		200		200	ns
T_{AEA}	Adr (AB) (Active) Delay from AEN↑ (S1)[1]	20		20		ns
T_{FAAB}	Adr (AB) (Active) Delay from CLK↑ (S1)[2]		250		250	ns
T_{AFAB}	Adr (AB) (Float) Delay from CLK↑ (SI)[2]		150		150	ns
T_{ASM}	Adr (AB) (Stable) Delay from CLK↑ (S1)[2]		250		250	ns
T_{AH}	Adr (AB) (Stable) Hold from CLK↑ (S1)[2]	$T_{ASM}-50$		$T_{ASM}-50$		ns
T_{AHR}	Adr (AB) (Valid) Hold from $\overline{RD}$↑ (S1, SI)[1]	60		60		ns
T_{AHW}	Adr (AB) (Valid) Hold from $\overline{Wr}$↑ (S1, SI)[1]	300		300		ns
T_{FADB}	Adr (DB) (Active) Delay from CLK↑ (S1)[2]		300		300	ns
T_{AFDB}	Adr (DB) (Float) Delay from CLK↑ (S2)[2]	$T_{STT}+20$	250	$T_{STT}+20$	170	ns
T_{ASS}	Adr (DB) Setup to Adr Stb↓ (S1-S2)[1]	100		100		ns
T_{AHS}	Adr (DB) (Valid) Hold from Adr Stb↓ (S2)[1]	20		20		ns
T_{STL}	Adr Stb↑ Delay from CLK↑ (S1)		200		200	ns
T_{STT}	Adr Stb↓ Delay from CLK↑ (S2)		140		140	ns
T_{SW}	Adr Stb Width (S1-S2)[1]	$T_{CY}-100$		$T_{CY}-100$		ns
T_{ASC}	$\overline{Rd}$↓ or $\overline{Wr}$(Ext)↓ Delay from Adr Stb↓ (S2)[1]	70		70		ns
T_{DBC}	$\overline{RD}$↓ or $\overline{WR}$(Ext)↓ Delay from Adr (DB) (Float) (S2)[1]	20		20		ns
T_{AK}	DACK↑ or ↓Delay from CLK↓ (S2, S1) and TC/Mark↑ Delay from CLK↑ (S3) and TC/Mark↓ Delay from CLK↑ (S4)[4]		250		250	ns
T_{DCL}	$\overline{RD}$↓ or $\overline{Wr}$(Ext)↓ Delay from CLK↑ (S2) and Wr↓ Delay from CLK↑ (S3)[2,5]		200		200	ns
T_{DCT}	Rd↑ Delay from CLK↓ (S1, SI) and Wr↑ Delay from CLK↑ (S4)[2,6]		200		200	ns
T_{FAC}	$\overline{Rd}$ or Wr (Active) from CLK↑ (S1)[2]		300		300	ns
T_{AFC}	$\overline{Rd}$ or $\overline{Wr}$ (Active) from CLK↑ (S1)[2]		150		150	ns
T_{RWM}	$\overline{Rd}$ Width (S2-S1 or SI)[1]	$2T_{CY}+T_\theta-50$		$2T_{CY}+T_\theta-50$		ns
T_{WWM}	$\overline{Wr}$ Width (S3-S4)[1]	$T_{CY}-50$		$T_{CY}-50$		ns
T_{WWME}	$\overline{WR}$(Ext) Width (S2-S4)[1]	$2T_{CY}-50$		$2T_{CY}-50$		ns

NOTES:
1. Tracking Parameter.
2. Load = + 50 pF.
3. Load = V_{OH} = 3.3V.
4. $\Delta T_{AK} < 50$ ns.
5. $\Delta T_{DCL} < 50$ ns.
6. $\Delta T_{DCT} < 50$ ns.

8259A/8259A-2/8259A-8
PROGRAMMABLE INTERRUPT CONTROLLER

- **iAPX 86, iAPX 88 Compatible**
- **MCS-80®, MCS-85® Compatible**
- **Eight-Level Priority Controller**
- **Expandable to 64 Levels**
- **Programmable Interrupt Modes**
- **Individual Request Mask Capability**
- **Single +5V Supply (No Clocks)**
- **28-Pin Dual-In-Line Package**

The Intel® 8259A Programmable Interrupt Controller handles up to eight vectored priority interrupts for the CPU. It is cascadable for up to 64 vectored priority interrupts without additional circuitry. It is packaged in a 28-pin DIP, uses NMOS technology and requires a single +5V supply. Circuitry is static, requiring no clock input.

The 8259A is designed to minimize the software and real time overhead in handling multi-level priority interrupts. It has several modes, permitting optimization for a variety of system requirements.

The 8259A is fully upward compatible with the Intel® 8259. Software originally written for the 8259 will operate the 8259A in all 8259 equivalent modes (MCS-80/85, Non-Buffered, Edge Triggered).

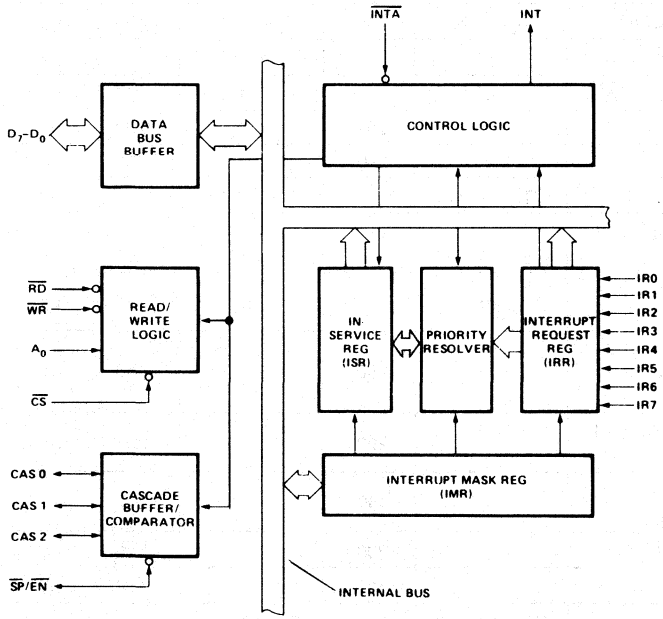

Figure 1. Block Diagram

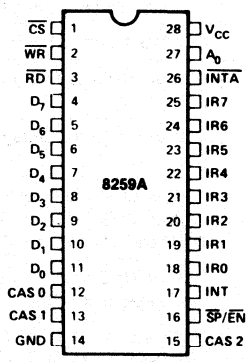

Figure 2. Pin Configuration

Table 1. Pin Description

Symbol	Pin No.	Type	Name and Function
V_{CC}	28	I	**Supply:** +5V Supply.
GND	14	I	**Ground.**
$\overline{CS}$	1	I	**Chip Select:** A low on this pin enables $\overline{RD}$ and $\overline{WR}$ communication between the CPU and the 8259A. INTA functions are independent of CS.
$\overline{WR}$	2	O	**Write:** A low on this pin when CS is low enables the 8259A to accept command words from the CPU.
$\overline{RD}$	3	I	**Read:** A low on this pin when CS is low enables the 8259A to release status onto the data bus for the CPU.
D_7–D_0	4–11	I/O	**Bidirectional Data Bus:** Control, status and interrupt-vector information is transferred via this bus.
CAS_0–CAS_2	12, 13, 15	I/O	**Cascade Lines:** The CAS lines form a private 8259A bus to control a multiple 8259A structure. These pins are outputs for a master 8259A and inputs for a slave 8259A.
$\overline{SP}/\overline{EN}$	16	I/O	**Slave Program/Enable Buffer:** This is a dual function pin. When in the Buffered Mode it can be used as an output to control buffer transceivers (EN). When not in the buffered mode it is used as an input to designate a master (SP = 1) or slave (SP = 0).
INT	17	O	**Interrupt:** This pin goes high whenever a valid interrupt request is asserted. It is used to interrupt the CPU, thus it is connected to the CPU's interrupt pin.
IR_0–IR_7	18–25	I	**Interrupt Requests:** Asynchronous inputs. An interrupt request is executed by raising an IR input (low to high), and holding it high until it is acknowledged (Edge Triggered Mode), or just by a high level on an IR input (Level Triggered Mode).
$\overline{INTA}$	26	I	**Interrupt Acknowledge:** This pin is used to enable 8259A interrupt-vector data onto the data bus by a sequence of interrupt acknowledge pulses issued by the CPU.
A_0	27	I	**AO Address Line:** This pin acts in conjunction with the $\overline{CS}$, $\overline{WR}$, and $\overline{RD}$ pins. It is used by the 8259A to decipher various Command Words the CPU writes and status the CPU wishes to read. It is typically connected to the CPU A0 address line (A1 for iAPX 86, 88).

FUNCTIONAL DESCRIPTION

Interrupts in Microcomputer Systems

Microcomputer system design requires that I/O devices such as keyboards, displays, sensors and other components receive servicing in an efficient manner so that large amounts of the total system tasks can be assumed by the microcomputer with little or no effect on throughput.

The most common method of servicing such devices is the *Polled* approach. This is where the processor must test each device in sequence and in effect "ask" each one if it needs servicing. It is easy to see that a large portion of the main program is looping through this continuous polling cycle and that such a method would have a serious, detrimental effect on system throughput, thus limiting the tasks that could be assumed by the microcomputer and reducing the cost effectiveness of using such devices.

A more desirable method would be one that would allow the microprocessor to be executing its main program and only stop to service peripheral devices when it is told to do so by the device itself. In effect, the method would provide an external asynchronous input that would inform the processor that it should complete whatever instruction that is currently being executed and fetch a new routine that will service the requesting device. Once this servicing is complete, however, the processor would resume exactly where it left off.

This method is called *Interrupt*. It is easy to see that system throughput would drastically increase, and thus more tasks could be assumed by the microcomputer to further enhance its cost effectiveness.

The Programmable Interrupt Controller (PIC) functions as an overall manager in an Interrupt-Driven system environment. It accepts requests from the peripheral equipment, determines which of the incoming requests is of the highest importance (priority), ascertains whether the incoming request has a higher priority value than the level currently being serviced, and issues an interrupt to the CPU based on this determination.

Each peripheral device or structure usually has a special program or "routine" that is associated with its specific functional or operational requirements; this is referred to as a "service routine". The PIC, after issuing an Interrupt to the CPU, must somehow input information into the CPU that can "point" the Program Counter to the service routine associated with the requesting device. This "pointer" is an address in a vectoring table and will often be referred to, in this document, as vectoring data.

The 8259A

The 8259A is a device specifically designed for use in real time, interrupt driven microcomputer systems. It manages eight levels or requests and has built-in features for expandability to other 8259A's (up to 64 levels). It is programmed by the system's software as an I/O peripheral. A selection of priority modes is available to the programmer so that the manner in which the requests are processed by the 8259A can be configured to match his system requirements. The priority modes can be changed or reconfigured dynamically at any time during the main program. This means that the complete interrupt structure can be defined as required, based on the total system environment.

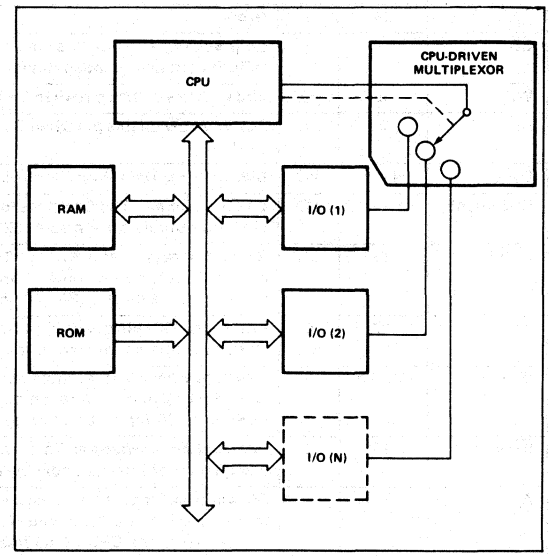

Figure 3a. Polled Method

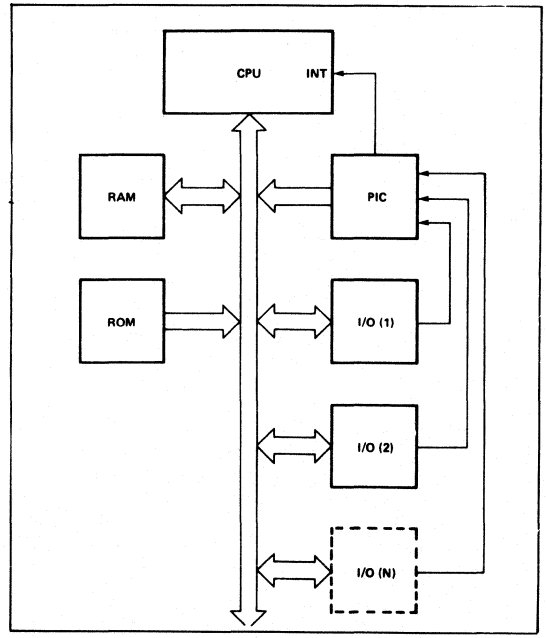

Figure 3b. Interrupt Method

INTERRUPT REQUEST REGISTER (IRR) AND IN-SERVICE REGISTER (ISR)

The interrupts at the IR input lines are handled by two registers in cascade, the Interrupt Request Register (IRR) and the In-Service Register (ISR). The IRR is used to store all the interrupt levels which are requesting service; and the ISR is used to store all the interrupt levels which are being serviced.

PRIORITY RESOLVER

This logic block determines the priorities of the bits set in the IRR. The highest priority is selected and strobed into the corresponding bit of the ISR during $\overline{INTA}$ pulse.

INTERRUPT MASK REGISTER (IMR)

The IMR stores the bits which mask the interrupt lines to be masked. The IMR operates on the IRR. Masking of a higher priority input will not affect the interrupt request lines of lower priority.

INT (INTERRUPT)

This output goes directly to the CPU interrupt input. The V_{OH} level on this line is designed to be fully compatible with the 8080A, 8085A and 8086 input levels.

$\overline{INTA}$ (INTERRUPT ACKNOWLEDGE)

$\overline{INTA}$ pulses will cause the 8259A to release vectoring information onto the data bus. The format of this data depends on the system mode (μPM) of the 8259A.

DATA BUS BUFFER

This 3-state, bidirectional 8-bit buffer is used to interface the 8259A to the system Data Bus. Control words and status information are transferred through the Data Bus Buffer.

READ/WRITE CONTROL LOGIC

The function of this block is to accept OUTput commands from the CPU. It contains the Initialization Command Word (ICW) registers and Operation Command Word (OCW) registers which store the various control formats for device operation. This function block also allows the status of the 8259A to be transferred onto the Data Bus.

$\overline{CS}$ (CHIP SELECT)

A LOW on this input enables the 8259A. No reading or writing of the chip will occur unless the device is selected.

$\overline{WR}$ (WRITE)

A LOW on this input enables the CPU to write control words (ICWs and OCWs) to the 8259A.

$\overline{RD}$ (READ)

A LOW on this input enables the 8259A to send the status of the Interrupt Request Register (IRR), In Service Register (ISR), the Interrupt Mask Register (IMR), or the Interrupt level onto the Data Bus.

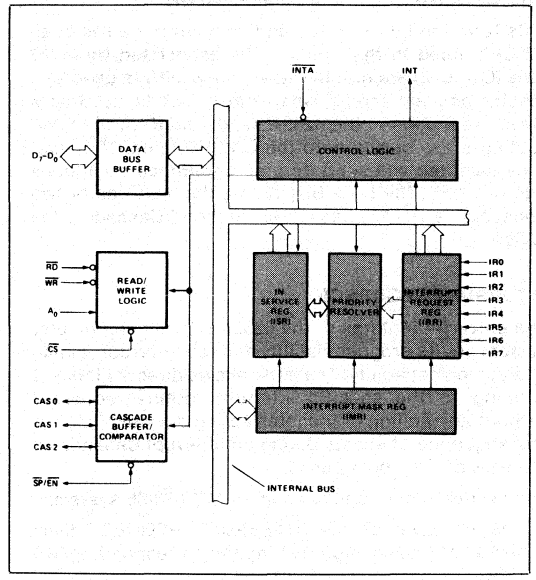

Figure 4a. 8259A Block Diagram

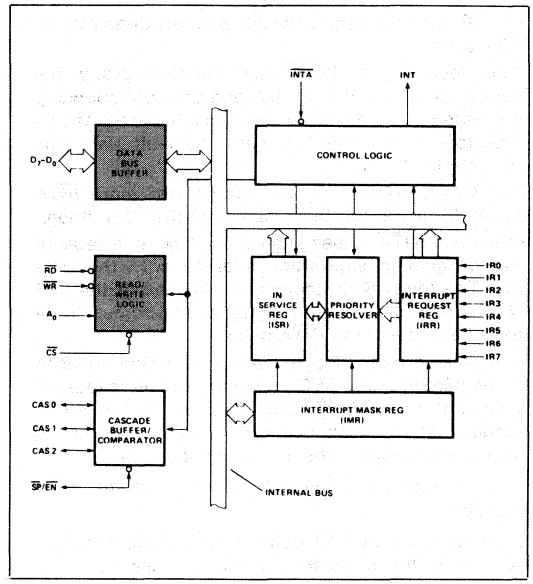

Figure 4b. 8259A Block Diagram

A_0

This input signal is used in conjunction with $\overline{WR}$ and $\overline{RD}$ signals to write commands into the various command registers, as well as reading the various status registers of the chip. This line can be tied directly to one of the address lines.

THE CASCADE BUFFER/COMPARATOR

This function block stores and compares the IDs of all 8259A's used in the system. The associated three I/O pins (CAS0-2) are outputs when the 8259A is used as a master and are inputs when the 8259A is used as a slave. As a master, the 8259A sends the ID of the interrupting slave device onto the CAS0-2 lines. The slave thus selected will send its preprogrammed subroutine address onto the Data Bus during the next one or two consecutive $\overline{INTA}$ pulses. (See section "Cascading the 8259A".)

INTERRUPT SEQUENCE

The powerful features of the 8259A in a microcomputer system are its programmability and the interrupt routine addressing capability. The latter allows direct or indirect jumping to the specific interrupt routine requested without any polling of the interrupting devices. The normal sequence of events during an interrupt depends on the type of CPU being used.

The events occur as follows in an MCS-80/85 system:

1. One or more of the INTERRUPT REQUEST lines (IR7-0) are raised high, setting the corresponding IRR bit(s).
2. The 8259A evaluates these requests, and sends an INT to the CPU, if appropriate.
3. The CPU acknowledges the INT and responds with an $\overline{INTA}$ pulse.
4. Upon receiving an $\overline{INTA}$ from the CPU group, the highest priority ISR bit is set, and the corresponding IRR bit is reset. The 8259A will also release a CALL instruction code (11001101) onto the 8-bit Data Bus through its D7-0 pins.
5. This CALL instruction will initiate two more $\overline{INTA}$ pulses to be sent to the 8259A from the CPU group.
6. These two $\overline{INTA}$ pulses allow the 8259A to release its preprogrammed subroutine address onto the Data Bus. The lower 8-bit address is released at the first $\overline{INTA}$ pulse and and the higher 8-bit address is released at the second $\overline{INTA}$ pulse.
7. This completes the 3-byte CALL instruction released by the 8259A. In the AEOI mode the ISR bit is reset at the end of the third $\overline{INTA}$ pulse. Otherwise, the ISR bit remains set until an appropriate EOI command is issued at the end of the interrupt sequence.

The events occurring in an iAPX 86 system are the same until step 4.

4. Upon receiving an $\overline{INTA}$ from the CPU group, the highest priority ISR bit is set and the corresponding IRR bit is reset. The 8259A does not drive the Data Bus during this cycle.
5. The iAPX 86/10 will initiate a second $\overline{INTA}$ pulse. During this pulse, the 8259A releases an 8-bit pointer onto the Data Bus where it is read by the CPU.
6. This completes the interrupt cycle. In the AEOI mode the ISR bit is reset at the end of the second $\overline{INTA}$ pulse. Otherwise, the ISR bit remains set until an appropriate EOI command is issued at the end of the interrupt subroutine.

If no interrupt request is present at step 4 of either sequence (i.e., the request was too short in duration) the 8259A will issue an interrupt level 7. Both the vectoring bytes and the CAS lines will look like an interrupt level 7 was requested.

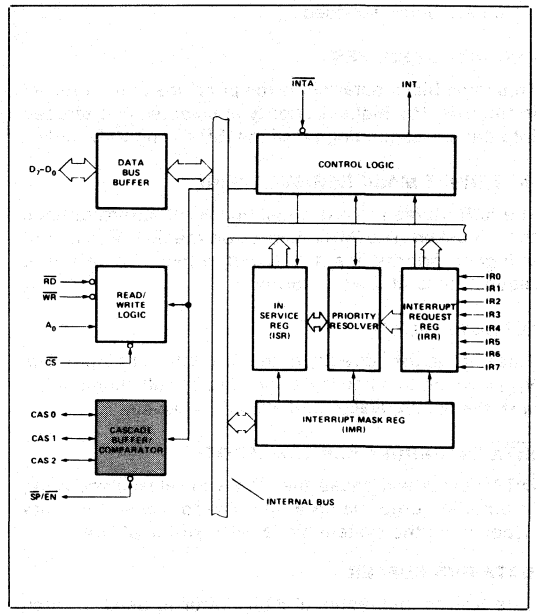

Figure 4c. 8259A Block Diagram

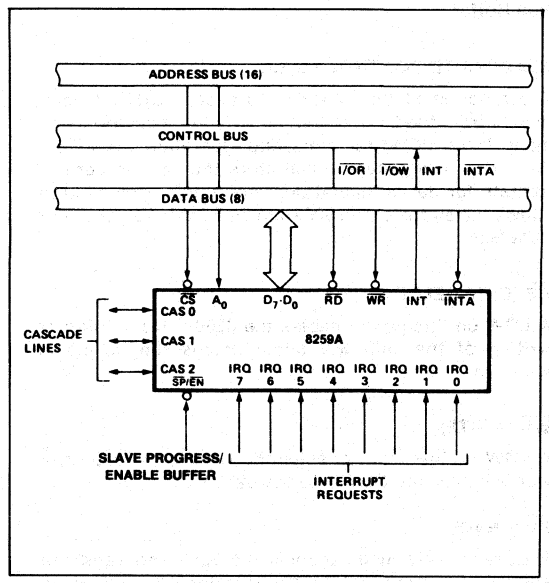

Figure 5. 8259A Interface to Standard System Bus

INTERRUPT SEQUENCE OUTPUTS

MCS-80®, MCS-85®

This sequence is timed by three $\overline{INTA}$ pulses. During the first $\overline{INTA}$ pulse the CALL opcode is enabled onto the data bus.

Content of First Interrupt Vector Byte

	D7	D6	D5	D4	D3	D2	D1	D0
CALL CODE	1	1	0	0	1	1	0	1

During the second $\overline{INTA}$ pulse the lower address of the appropriate service routine is enabled onto the data bus. When Interval = 4 bits A_5-A_7 are programmed, while A_0-A_4 are automatically inserted by the 8259A. When Interval = 8 only A_6 and A_7 are programmed, while A_0-A_5 are automatically inserted.

Content of Second Interrupt Vector Byte

IR	Interval = 4							
	D7	D6	D5	D4	D3	D2	D1	D0
7	A7	A6	A5	1	1	1	0	0
6	A7	A6	A5	1	1	0	0	0
5	A7	A6	A5	1	0	1	0	0
4	A7	A6	A5	1	0	0	0	0
3	A7	A6	A5	0	1	1	0	0
2	A7	A6	A5	0	1	0	0	0
1	A7	A6	A5	0	0	1	0	0
0	A7	A6	A5	0	0	0	0	0

IR	Interval = 8							
	D7	D6	D5	D4	D3	D2	D1	D0
7	A7	A6	1	1	1	0	0	0
6	A7	A6	1	1	0	0	0	0
5	A7	A6	1	0	1	0	0	0
4	A7	A6	1	0	0	0	0	0
3	A7	A6	0	1	1	0	0	0
2	A7	A6	0	1	0	0	0	0
1	A7	A6	0	0	1	0	0	0
0	A7	A6	0	0	0	0	0	0

During the third INTA pulse the higher address of the appropriate service routine, which was programmed as byte 2 of the initialization sequence (A_8 – A_{15}), is enabled onto the bus.

Content of Third Interrupt Vector Byte

D7	D6	D5	D4	D3	D2	D1	D0
A15	A14	A13	A12	A11	A10	A9	A8

iAPX 86, iAPX 88

iAPX 86 mode is similar to MCS-80 mode except that only two Interrupt Acknowledge cycles are issued by the processor and no CALL opcode is sent to the processor. The first interrupt acknowledge cycle is similar to that of MCS-80, 85 systems in that the 8259A uses it to internally freeze the state of the interrupts for priority resolution and as a master it issues the interrupt code on the cascade lines at the end of the INTA pulse. On this first cycle it does not issue any data to the processor and leaves its data bus buffers disabled. On the second interrupt acknowledge cycle in iAPX 86 mode the master (or slave if so programmed) will send a byte of data to the processor with the acknowledged interrupt code composed as follows (note the state of the ADI mode control is ignored and A_5–A_{11} are unused in iAPX 86 mode):

Content of Interrupt Vector Byte for iAPX 86 System Mode

	D7	D6	D5	D4	D3	D2	D1	D0
IR7	T7	T6	T5	T4	T3	1	1	1
IR6	T7	T6	T5	T4	T3	1	1	0
IR5	T7	T6	T5	T4	T3	1	0	1
IR4	T7	T6	T5	T4	T3	1	0	0
IR3	T7	T6	T5	T4	T3	0	1	1
IR2	T7	T6	T5	T4	T3	0	1	0
IR1	T7	T6	T5	T4	T3	0	0	1
IR0	T7	T6	T5	T4	T3	0	0	0

PROGRAMMING THE 8259A

The 8259A accepts two types of command words generated by the CPU:

1. *Initialization Command Words (ICWs):* Before normal operation can begin, each 8259A in the system must be brought to a starting point — by a sequence of 2 to 4 bytes timed by $\overline{WR}$ pulses.
2. *Operation Command Words (OCWs):* These are the command words which command the 8259A to operate in various interrupt modes. These modes are:
   a. Fully nested mode
   b. Rotating priority mode
   c. Special mask mode
   d. Polled mode

The OCWs can be written into the 8259A anytime after initialization.

INITIALIZATION COMMAND WORDS (ICWS)

GENERAL

Whenever a command is issued with A0 = 0 and D4 = 1, this is interpreted as Initialization Command Word 1 (ICW1). ICW1 starts the initialization sequence during which the following automatically occur.

a. The edge sense circuit is reset, which means that following initialization, an interrupt request (IR) input must make a low-to-high transition to generate an interrupt.
b. The Interrupt Mask Register is cleared.
c. IR7 input is assigned priority 7.
d. The slave mode address is set to 7.
e. Special Mask Mode is cleared and Status Read is set to IRR.
f. If IC4=0, then all functions selected in ICW4 are set to zero. (Non-Buffered mode*, no Auto-EOI, MCS-80, 85 system).

***Note:** Master/Slave in ICW4 is only used in the buffered mode.

INITIALIZATION COMMAND WORDS 1 AND 2 (ICW1, ICW2)

A_5-A_{15}: *Page starting address of service routines.* In an MCS 80/85 system, the 8 request levels will generate CALLs to 8 locations equally spaced in memory. These can be programmed to be spaced at intervals of 4 or 8 memory locations, thus the 8 routines will occupy a page of 32 or 64 bytes, respectively.

The address format is 2 bytes long (A_0-A_{15}). When the routine interval is 4, A_0-A_4 are automatically inserted by the 8259A, while A_5-A_{15} are programmed externally. When the routine interval is 8, A_0-A_5 are automatically inserted by the 8259A, while A_6-A_{15} are programmed externally.

The 8-byte interval will maintain compatibility with current software, while the 4-byte interval is best for a compact jump table.

In an iAPX 86 system A_{15}-A_{11} are inserted in the five most significant bits of the vectoring byte and the 8259A sets the three least significant bits according to the interrupt level. A_{10}-A_5 are ignored and ADI (Address interval) has no effect.

LTIM: If LTIM = 1, then the 8259A will operate in the level interrupt mode. Edge detect logic on the interrupt inputs will be disabled.

ADI: CALL address interval. ADI = 1 then interval = 4; ADI = 0 then interval = 8.

SNGL: Single. Means that this is the only 8259A in the system. If SNGL = 1 no ICW3 will be issued.

IC4: If this bit is set — ICW4 has to be read. If ICW4 is not needed, set IC4 = 0.

INITIALIZATION COMMAND WORD 3 (ICW3)

This word is read only when there is more than one 8259A in the system and cascading is used, in which case SNGL = 0. It will load the 8-bit slave register. The functions of this register are:

a. In the master mode (either when SP = 1, or in buffered mode when M/S = 1 in ICW4) a "1" is set for each slave in the system. The master then will release byte 1 of the call sequence (for MCS-80/85 system) and will enable the corresponding slave to release bytes 2 and 3 (for iAPX 86 only byte 2) through the cascade lines.

b. In the slave mode (either when $\overline{SP} = 0$, or if BUF = 1 and M/S = 0 in ICW4) bits 2-0 identify the slave. The slave compares its cascade input with these bits and, if they are equal, bytes 2 and 3 of the call sequence (or just byte 2 for iAPX 86 are released by it on the Data Bus.

INITIALIZATION COMMAND WORD 4 (ICW4)

SFNM: If SFNM = 1 the special fully nested mode is programmed.

BUF: If BUF = 1 the buffered mode is programmed. In buffered mode $\overline{SP}/\overline{EN}$ becomes an enable output and the master/slave determination is by M/S.

M/S: If buffered mode is selected: M/S = 1 means the 8259A is programmed to be a master, M/S = 0 means the 8259A is programmed to be a slave. If BUF = 0, M/S has no function.

AEOI: If AEOI = 1 the automatic end of interrupt mode is programmed.

μPM: Microprocessor mode: μPM = 0 sets the 8259A for MCS-80, 85 system operation, μPM = 1 sets the 8259A for iAPX 86 system operation.

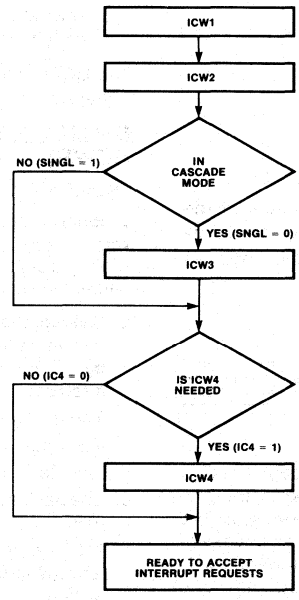

Figure 6. Initialization Sequence

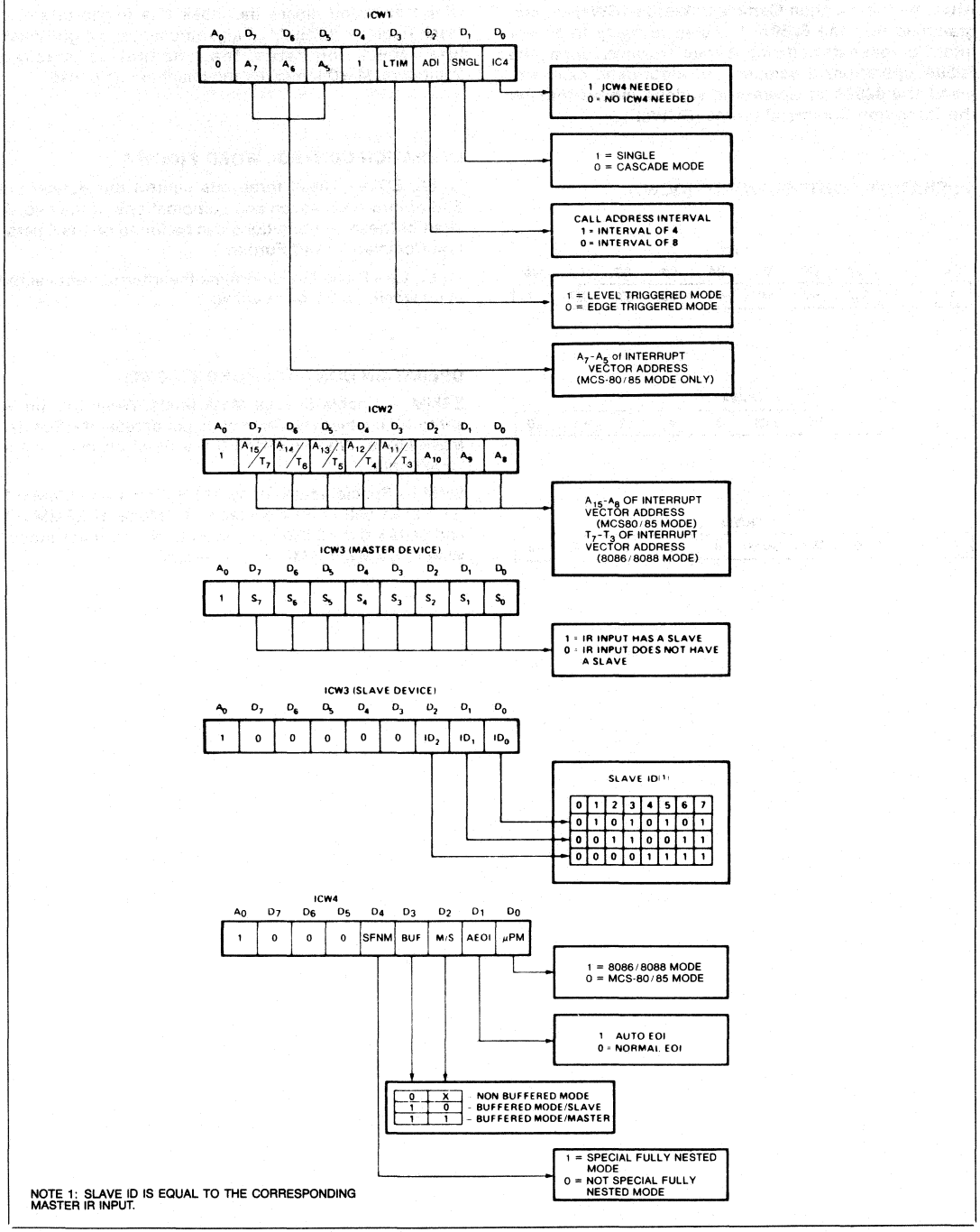

NOTE 1: SLAVE ID IS EQUAL TO THE CORRESPONDING MASTER IR INPUT.

Figure 7. Initialization Command Word Format

OPERATION COMMAND WORDS (OCWs)

After the Initialization Command Words (ICWs) are programmed into the 8259A, the chip is ready to accept interrupt requests at its input lines. However, during the 8259A operation, a selection of algorithms can command the 8259A to operate in various modes through the Operation Command Words (OCWs).

OPERATION CONTROL WORDS (OCWs)

OCW1

A0	D7	D6	D5	D4	D3	D2	D1	D0
1	M7	M6	M5	M4	M3	M2	M1	M0

OCW2

0	R	SL	EOI	0	0	L2	L1	L0

OCW3

0	0	ESMM	SMM	0	1	P	RR	RIS

OPERATION CONTROL WORD 1 (OCW1)

OCW1 sets and clears the mask bits in the interrupt Mask Register (IMR). $M_7 - M_0$ represent the eight mask bits. M = 1 indicates the channel is masked (inhibited), M = 0 indicates the channel is enabled.

OPERATION CONTROL WORD 2 (OCW2)

R, SL, EOI — These three bits control the Rotate and End of Interrupt modes and combinations of the two. A chart of these combinations can be found on the Operation Command Word Format.

L_2, L_1, L_0—These bits determine the interrupt level acted upon when the SL bit is active.

OPERATION CONTROL WORD 3 (OCW3)

ESMM — Enable Special Mask Mode. When this bit is set to 1 it enables the SMM bit to set or reset the Special Mask Mode. When ESMM = 0 the SMM bit becomes a "don't care".

SMM — Special Mask Mode. If ESMM = 1 and SMM = 1 the 8259A will enter Special Mask Mode. If ESMM = 1 and SMM = 0 the 8259A will revert to normal mask mode. When ESMM = 0, SMM has no effect.

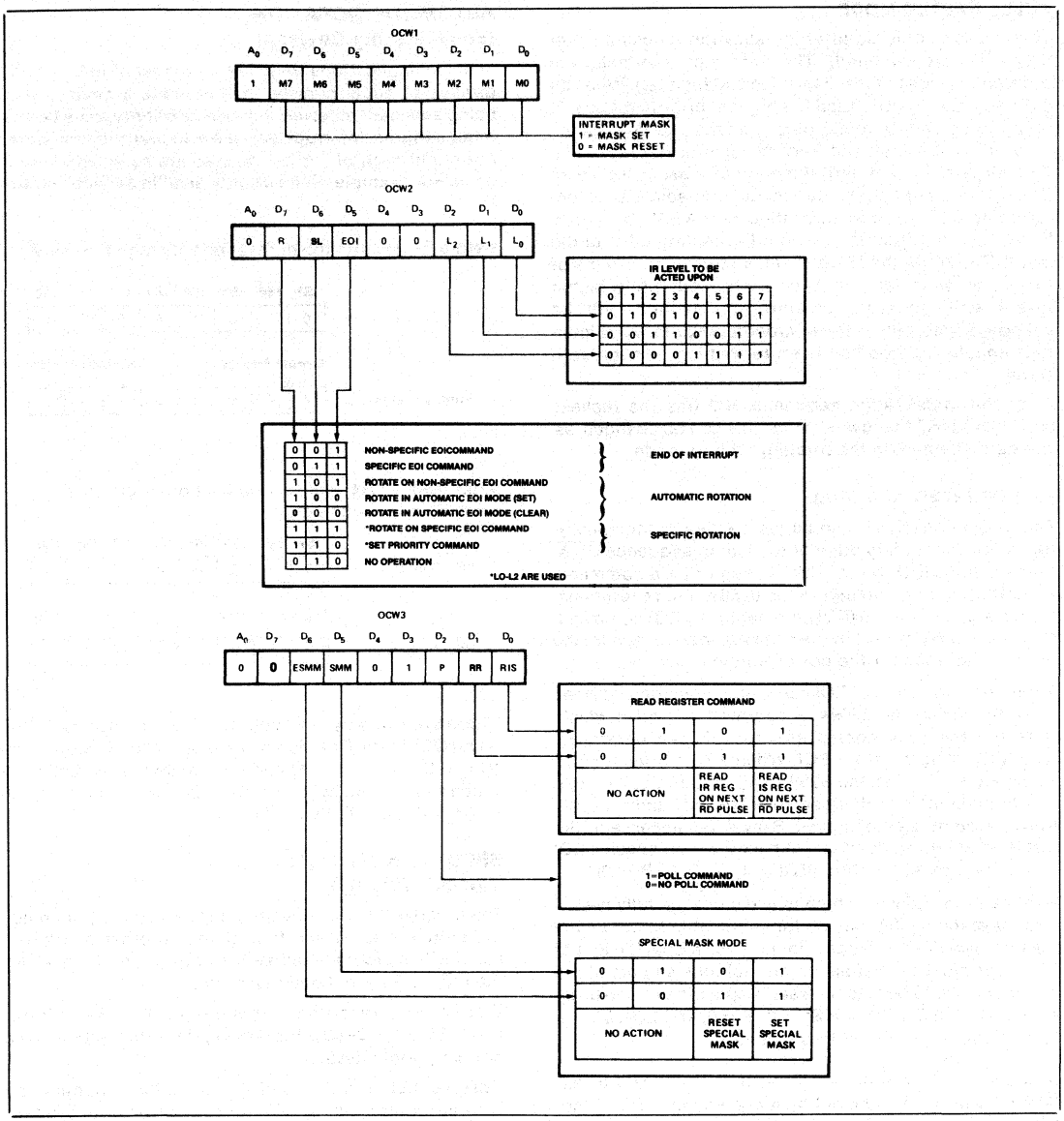

Figure 8. Operation Command Word Format

FULLY NESTED MODE

This mode is entered after initialization unless another mode is programmed. The interrupt requests are ordered in priority form 0 through 7 (0 highest). When an interrupt is acknowledged the highest priority request is determined and its vector placed on the bus. Additionally, a bit of the Interrupt Service register (ISO-7) is set. This bit remains set until the microprocessor issues an End of Interrupt (EOI) command immediately before returning from the service routine, or if AEOI (Automatic End of Interrupt) bit is set, until the trailing edge of the last INTA. While the IS bit is set, all further interrupts of the same or lower priority are inhibited, while higher levels will generate an interrupt (which will be acknowledged only if the microprocessor internal Interrupt enable flip-flop has been re-enabled through software).

After the initialization sequence, IR0 has the highest priority and IR7 the lowest. Priorities can be changed, as will be explained, in the rotating priority mode.

END OF INTERRUPT (EOI)

The In Service (IS) bit can be reset either automatically following the trailing edge of the last in sequence $\overline{\text{INTA}}$ pulse (when AEOI bit in ICW1 is set) or by a command word that must be issued to the 8259A before returning from a service routine (EOI command). An EOI command must be issued twice if in the Cascade mode, once for the master and once for the corresponding slave.

There are two forms of EOI command: Specific and Non-Specific. When the 8259A is operated in modes which preserve the fully nested structure, it can determine which IS bit to reset on EOI. When a Non-Specific EOI command is issued the 8259A will automatically reset the highest IS bit of those that are set, since in the fully nested mode the highest IS level was necessarily the last level acknowledged and serviced. A non-specific EOI can be issued with OCW2 (EOI = 1, SL = 0, R = 0).

When a mode is used which may disturb the fully nested structure, the 8259A may no longer be able to determine the last level acknowledged. In this case a Specific End of Interrupt must be issued which includes as part of the command the IS level to be reset. A specific EOI can be issued with OCW2 (EOI = 1, SL = 1, R = 0, and LO-L2 is the binary level of the IS bit to be reset).

It should be noted that an IS bit that is masked by an IMR bit will not be cleared by a non-specific EOI if the 8259A is in the Special Mask Mode.

AUTOMATIC END OF INTERRUPT (AEOI) MODE

If AEOI = 1 in ICW4, then the 8259A will operate in AEOI mode continuously until reprogrammed by ICW4. In this mode the 8259A will automatically perform a non-specific EOI operation at the trailing edge of the last interrupt acknowledge pulse (third pulse in MCS-80/85, second in iAPX 86). Note that from a system standpoint, this mode should be used only when a nested multilevel interrupt structure is not required within a single 8259A.

The AEOI mode can only be used in a master 8259A and not a slave.

AUTOMATIC ROTATION (Equal Priority Devices)

In some applications there are a number of interrupting devices of equal priority. In this mode a device, after being serviced, receives the lowest priority, so a device requesting an interrupt will have to wait, in the worst case until each of 7 other devices are serviced at most *once*. For example, if the priority and "in service" status is:

Before Rotate (IR4 the highest priority requiring service)

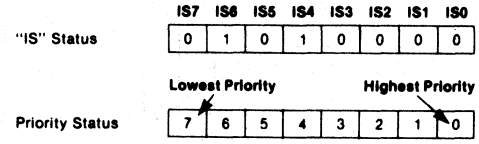

After Rotate (IR4 was serviced, all other priorities rotated correspondingly)

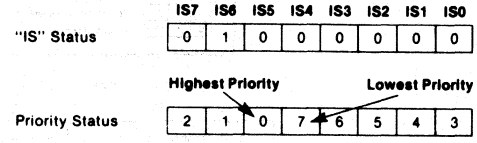

There are two ways to accomplish Automatic Rotation using OCW2, the Rotation on Non-Specific EOI Command (R = 1, SL = 0, EOI = 1) and the Rotate in Automatic EOI Mode which is set by (R = 1, SL = 0, EOI = 0) and cleared by (R = 0, SL = 0, EOI = 0).

SPECIFIC ROTATION (Specific Priority)

The programmer can change priorities by programming the bottom priority and thus fixing all other priorities; i.e., if IR5 is programmed as the bottom priority device, then IR6 will have the highest one.

The Set Priority command is issued in OCW2 where: R = 1, SL = 1; LO–L2 is the binary priority level code of the bottom priority device.

Observe that in this mode internal status is updated by software control during OCW2. However, it is independent of the End of Interrupt (EOI) command (also executed by OCW2). Priority changes can be executed during an EOI command by using the Rotate on Specific EOI command in OCW2 (R = 1, SL = 1, EOI = 1 and LO–L2 = IR level to receive bottom priority).

INTERRUPT MASKS

Each Interrupt Request input can be masked individually by the Interrupt Mask Register (IMR) programmed through OCW1. Each bit in the IMR masks one interrupt channel if it is set (1). Bit 0 masks IR0, Bit 1 masks IR1 and so forth. Masking an IR channel does not affect the other channels operation.

SPECIAL MASK MODE

Some applications may require an interrupt service routine to dynamically alter the system priority structure during its execution under software control. For example, the routine may wish to inhibit lower priority requests for a portion of its execution but enable some of them for another portion.

The difficulty here is that if an Interrupt Request is acknowledged and an End of Interrupt command did not reset its IS bit (i.e., while executing a service routine), the 8259A would have inhibited all lower priority requests with no easy way for the routine to enable them

That is where the Special Mask Mode comes in. In the special Mask Mode, when a mask bit is set in OCW1, it inhibits further interrupts at that level *and enables* interrupts from *all other* levels (lower as well as higher) that are not masked.

Thus, any interrupts may be selectively enabled by loading the mask register.

The special Mask Mode is set by OCW3 where: SSMM = 1, SMM = 1, and cleared where SSMM = 1, SMM = 0.

POLL COMMAND

In this mode the INT output is not used or the microprocessor internal Interrupt Enable flip-flop is reset, disabling its interrupt input. Service to devices is achieved by software using a Poll command.

The Poll command is issued by setting P = "1" in OCW3. The 8259A treats the next $\overline{RD}$ pulse to the 8259A (i.e., $\overline{RD} = 0$, $\overline{CS} = 0$) as an interrupt acknowledge, sets the appropriate IS bit if there is a request, and reads the priority level. Interrupt is frozen from $\overline{WR}$ to $\overline{RD}$.

The word enabled onto the data bus during $\overline{RD}$ is:

D7	D6	D5	D4	D3	D2	D1	D0
I	–	–	–	–	W2	W1	W0

W0-W2: Binary code of the highest priority level requesting service.

I: Equal to a "1" if there is an interrupt.

This mode is useful if there is a routine command common to several levels so that the $\overline{INTA}$ sequence is not needed (saves ROM space). Another application is to use the poll mode to expand the number of priority levels to more than 64.

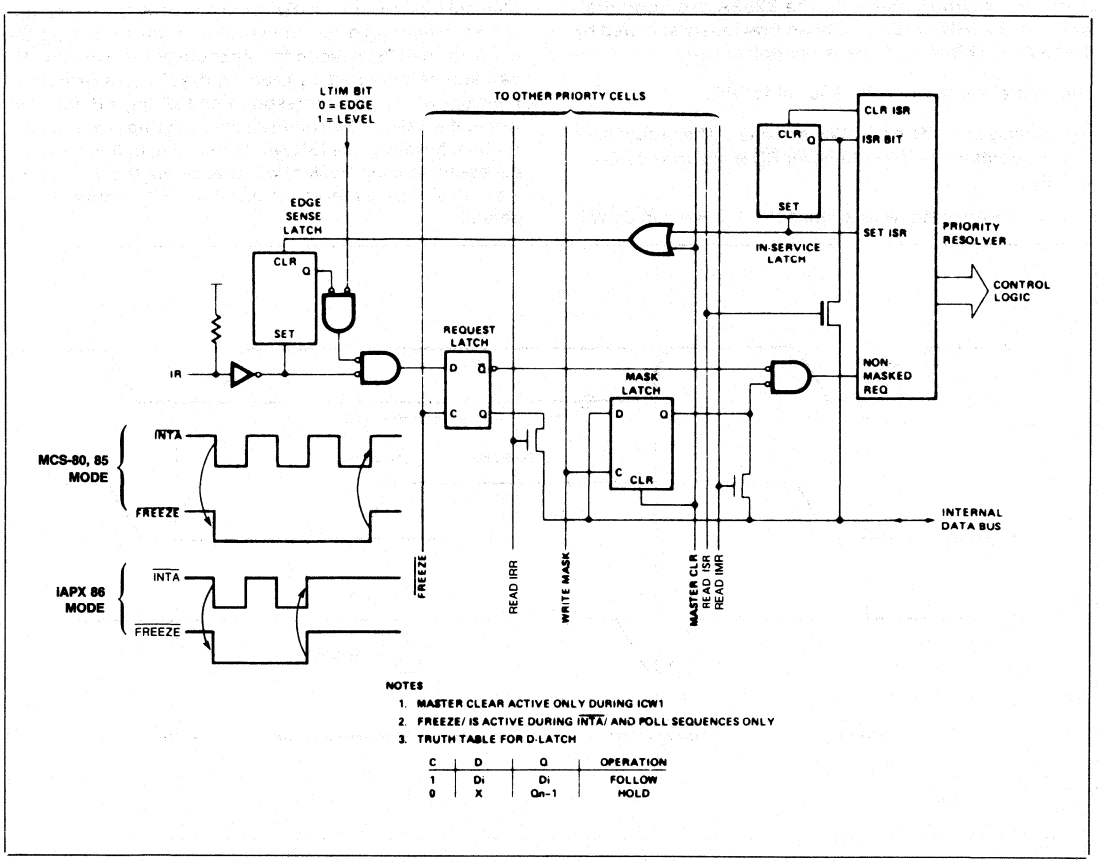

NOTES

1. MASTER CLEAR ACTIVE ONLY DURING ICW1
2. FREEZE/ IS ACTIVE DURING $\overline{INTA}$/ AND POLL SEQUENCES ONLY
3. TRUTH TABLE FOR D-LATCH

C	D	Q	OPERATION
1	Di	Di	FOLLOW
0	X	Qn-1	HOLD

Figure 9. Priority Cell—Simplified Logic Diagram

READING THE 8259A STATUS

The input status of several internal registers can be read to update the user information on the system. The following registers can be read via OCW3 (IRR and ISR or OCW1 [IMR]).

Interrupt Request Register (IRR): 8-bit register which contains the levels requesting an interrupt to be acknowledged. The highest request level is reset from the IRR when an interrupt is acknowledged. (Not affected by IMR.)

In-Service Register (ISR): 8-bit register which contains the priority levels that are being serviced. The ISR is updated when an End of Interrupt Command is issued.

Interrupt Mask Register: 8-bit register which contains the interrupt request lines which are masked.

The IRR can be read when, prior to the RD pulse, a Read Register Command is issued with OCW3 (RR = 1, RIS = 0.)

The ISR can be read when, prior to the RD pulse, a Read Register Command is issued with OCW3 (RR = 1, RIS = 1).

There is no need to write an OCW3 before every status read operation, as long as the status read corresponds with the previous one; i.e., the 8259A "remembers" whether the IRR or ISR has been previously selected by the OCW3. This is not true when poll is used.

After initialization the 8259A is set to IRR.

For reading the IMR, no OCW3 is needed. The output data bus will contain the IMR whenever $\overline{RD}$ is active and AO =1 (OCW1).

Polling overrides status read when P = 1, RR = 1 in OCW3.

EDGE AND LEVEL TRIGGERED MODES

This mode is programmed using bit 3 in ICW1.

If LTIM = '0', an interrupt request will be recognized by a low to high transition on an IR input. The IR input can remain high without generating another interrupt.

If LTIM = '1', an interrupt request will be recognized by a 'high' level on IR Input, and there is no need for an edge detection. The interrupt request must be removed before the EOI command is issued or the CPU interrupt is enabled to prevent a second interrupt from occurring.

The priority cell diagram shows a conceptual circuit of the level sensitive and edge sensitive input circuitry of the 8259A. Be sure to note that the request latch is a transparent D type latch.

In both the edge and level triggered modes the IR inputs must remain high until after the falling edge of the first INTA. If the IR input goes low before this time a DEFAULT IR7 will occur when the CPU acknowledges the interrupt. This can be a useful safeguard for detecting interrupts caused by spurious noise glitches on the IR inputs. To implement this feature the IR7 routine is used for "clean up" simply executing a return instruction, thus ignoring the interrupt. If IR7 is needed for other purposes a default IR7 can still be detected by reading the ISR. A normal IR7 interrupt will set the corresponding ISR bit, a default IR7 won't. If a default IR7 routine occurs during a normal IR7 routine, however, the ISR will remain set. In this case it is necessary to keep track of whether or not the IR7 routine was previously entered. If another IR7 occurs it is a default.

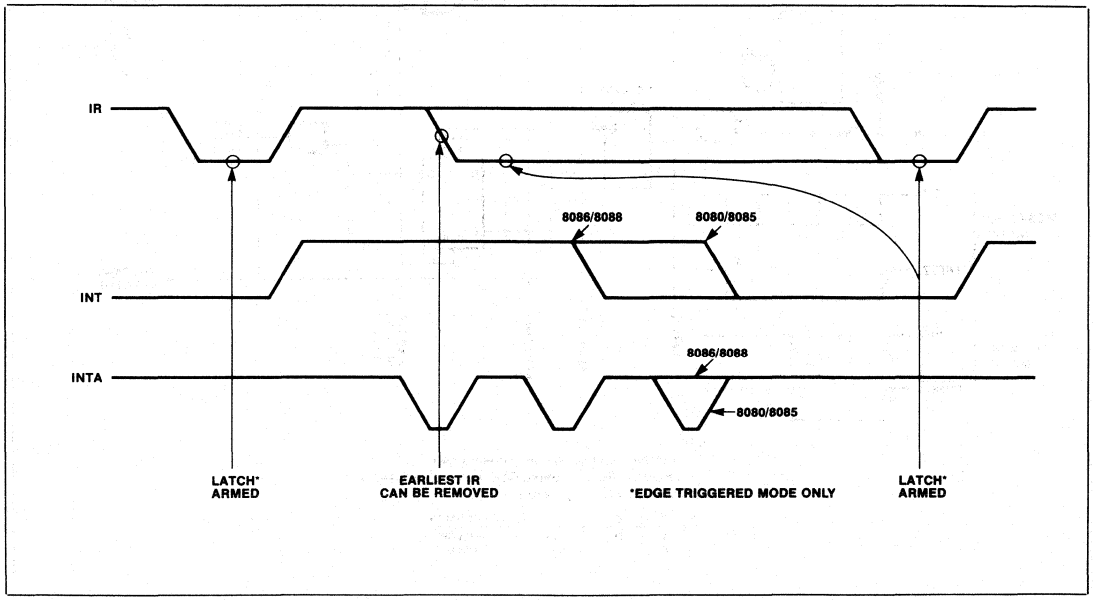

Figure 10. IR Triggering Timing Requirements

THE SPECIAL FULLY NESTED MODE

This mode will be used in the case of a big system where cascading is used, and the priority has to be conserved within each slave. In this case the fully nested mode will be programmed to the master (using ICW4). This mode is similar to the normal nested mode with the following exceptions:

a. When an interrupt request from a certain slave is in service this slave is not locked out from the master's priority logic and further interrupt requests from higher priority IR's within the slave will be recognized by the master and will initiate interrupts to the processor. (In the normal nested mode a slave is masked out when its request is in service and no higher requests from the same slave can be serviced.)

b. When exiting the Interrupt Service routine the software has to check whether the interrupt serviced was the only one from that slave. This is done by sending a non-specific End of Interrupt (EOI) command to the slave and then reading its In-Service register and checking for zero. If it is empty, a non-specific EOI can be sent to the master too. If not, no EOI should be sent.

BUFFERED MODE

When the 8259A is used in a large system where bus driving buffers are required on the data bus and the cascading mode is used, there exists the problem of enabling buffers.

The buffered mode will structure the 8259A to send an enable signal on $\overline{SP}/\overline{EN}$ to enable the buffers. In this mode, whenever the 8259A's data bus outputs are enabled, the $\overline{SP}/\overline{EN}$ output becomes active.

This modification forces the use of software programming to determine whether the 8259A is a master or a slave. Bit 3 in ICW4 programs the buffered mode, and bit 2 in ICW4 determines whether it is a master or a slave.

CASCADE MODE

The 8259A can be easily interconnected in a system of one master with up to eight slaves to handle up to 64 priority levels.

The master controls the slaves through the 3 line cascade bus. The cascade bus acts like chip selects to the slaves during the $\overline{INTA}$ sequence.

In a cascade configuration, the slave interrupt outputs are connected to the master interrupt request inputs. When a slave request line is activated and afterwards acknowledged, the master will enable the corresponding slave to release the device routine address during bytes 2 and 3 of INTA. (Byte 2 only for 8086/8088).

The cascade bus lines are normally low and will contain the slave address code from the trailing edge of the first INTA pulse to the trailing edge of the third pulse. Each 8259A in the system must follow a separate initialization sequence and can be programmed to work in a different mode. An EOI command must be issued twice: once for the master and once for the corresponding slave. An address decoder is required to activate the Chip Select (CS) input of each 8259A.

The cascade lines of the Master 8259A are activated only for slave inputs, non slave inputs leave the cascade line inactive (low).

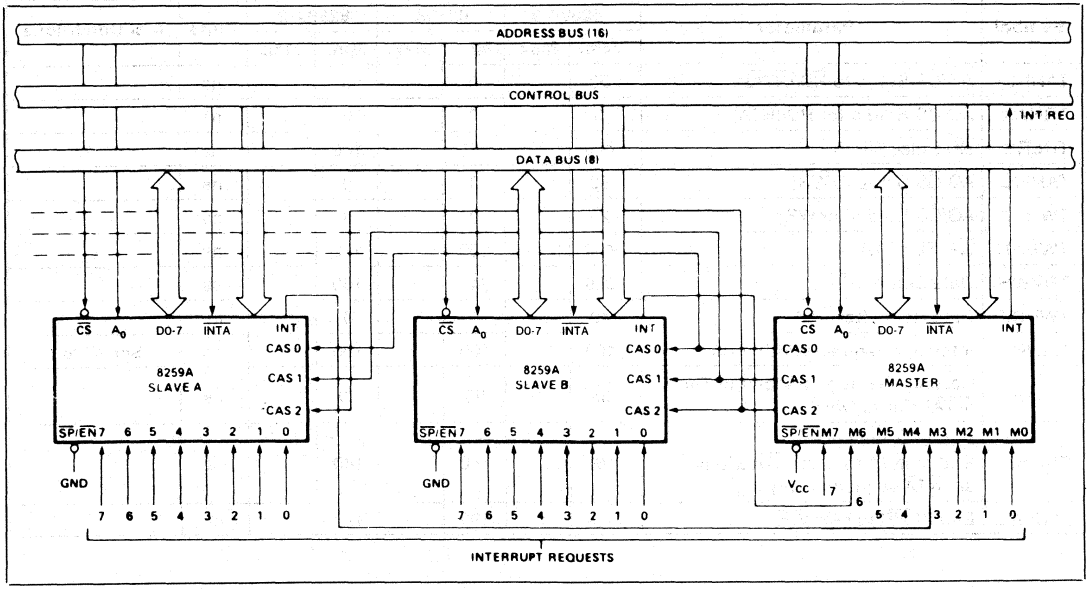

Figure 11. Cascading the 8259A

ABSOLUTE MAXIMUM RATINGS*

Ambient Temperature Under Bias ..... 0°C to 70°C
Storage Temperature ..... −65°C to +150°C
Voltage on Any Pin
with Respect to Ground ..... −0.5V to +7V
Power Dissipation ..... 1 Watt

NOTICE: Stresses above those listed under "Absolute Maximum Ratings" may cause permanent damage to the device. This is a stress rating only and functional operation of the device at these or any other conditions above those indicated in the operational sections of this specification is not implied.

D.C. CHARACTERISTICS [T_A = 0°C to 70°C, V_{CC} = 5V ±5% (8259A-8), V_{CC} = 5V ±10% (8259A, 8259A-2)]

Symbol	Parameter	Min.	Max.	Units	Test Conditions
V_{IL}	Input Low Voltage	−0.5	0.8	V	
V_{IH}	Input High Voltage	2.0	V_{CC} +0.5V	V	
V_{OL}	Output High Voltage		0.45	V	I_{OL} = 2.2mA
V_{OH}	Output High Voltage	2.4		V	I_{OH} = −400μA
$V_{OH(INT)}$	Interrupt Output High Voltage	3.5		V	I_{OH} = −100μA
		2.4		V	I_{OH} = −400μA
I_{LI}	Input Load Current	−10	+10	μA	0V ≤ V_{IN} ≤ V_{CC}
I_{LOL}	Output Leakage Current	−10	+10	μA	0.45V ≤ V_{OUT} ≤ V_{CC}
I_{CC}	V_{CC} Supply Current		85	mA	
I_{LIR}	IR Input Load Current		−300	μA	V_{IN} = 0
			10	μA	V_{IN} = V_{CC}

CAPACITANCE (T_A = 25°C; V_{CC} = GND = 0V)

Symbol	Parameter	Min.	Typ.	Max.	Unit	Test Conditions
C_{IN}	Input Capacitance			10	pF	fc = 1 MHZ
$C_{I/O}$	I/O Capacitance			20	pF	Unmeasured pins returned to V_{SS}

A.C. CHARACTERISTICS [T_A = 0°C to 70°C, V_{CC} = 5V ±5% (8259A-8), V_{CC} = 5V ± 10% (8259A, 8259A-2)]

TIMING REQUIREMENTS

Symbol	Parameter	8259A-8		8259A		8259A-2		Units	Test Conditions
		Min.	Max.	Min.	Max.	Min.	Max.		
TAHRL	AO/$\overline{CS}$ Setup to $\overline{RD}$/$\overline{INTA}$↓	50		0		0		ns	
TRHAX	AO/$\overline{CS}$ Hold after $\overline{RD}$/$\overline{INTA}$↑	5		0		0		ns	
TRLRH	$\overline{RD}$ Pulse Width	420		235		160		ns	
TAHWL	AO/$\overline{CS}$ Setup to $\overline{WR}$↓	50		0		0		ns	
TWHAX	AO/$\overline{CS}$ Hold after $\overline{WR}$↑	20		0		0		ns	
TWLWH	$\overline{WR}$ Pulse Width	400		290		190		ns	
TDVWH	Data Setup to $\overline{WR}$↑	300		240		160		ns	
TWHDX	Data Hold after $\overline{WR}$↑	40		0		0		ns	
TJLJH	Interrupt Request Width (Low)	100		100		100		ns	See Note 1
TCVIAL	Cascade Setup to Second or Third $\overline{INTA}$↓ (Slave Only)	55		55		40		ns	
TRHRL	End of $\overline{RD}$ to next $\overline{RD}$ End of $\overline{INTA}$ to next $\overline{INTA}$ within an $\overline{INTA}$ sequence only	160		160		160		ns	
TWHWL	End of $\overline{WR}$ to next $\overline{WR}$	190		190		190		ns	

A.C. CHARACTERISTICS (Continued)

Symbol	Parameter	8259A-8		8259A		8259A-2		Units	Test Conditions
		Min.	Max.	Min.	Max.	Min.	Max.		
*TCHCL	End of Command to next Command (Not same command type)	500		500		500		ns	
	End of $\overline{INTA}$ sequence to next $\overline{INTA}$ sequence.								

*Worst case timing for TCHCL in an actual microprocessor system is typically much greater than 500 ns (i.e. 8085A = 1.6μs, 8085A-2 = 1μs, 8086 = 1μs, 8086-2 = 625 ns)

NOTE: This is the low time required to clear the input latch in the edge triggered mode.

TIMING RESPONSES

Symbol	Parameter	8259A-8		8259A		8259A-2		Units	Test Conditions
		Min.	Max.	Min.	Max.	Min.	Max.		
TRLDV	Data Valid from $\overline{RD}$/$\overline{INTA}\downarrow$		300		200		120	ns	C of Data Bus = 100 pF
TRHDZ	Data Float after $\overline{RD}$/$\overline{INTA}\uparrow$	10	200	10	100	10	85	ns	C of Data Bus Max test C = 100 pF Min. test C = 15 pF
TJHIH	Interrupt Output Delay		400		350		300	ns	
TIALCV	Cascade Valid from First $\overline{INTA}\downarrow$ (Master Only)		565		565		360	ns	C_{INT} = 100 pF
TRLEL	Enable Active from $\overline{RD}\downarrow$ or $\overline{INTA}\downarrow$		160		125		100	ns	$C_{CASCADE}$ = 100 pF
TRHEH	Enable Inactive from $\overline{RD}\uparrow$ or $\overline{INTA}\uparrow$		325		150		150	ns	
TAHDV	Data Valid from Stable Address		350		200		200	ns	
TCVDV	Cascade Valid to Valid Data		300		300		200	ns	

A.C. TESTING INPUT, OUTPUT WAVEFORM

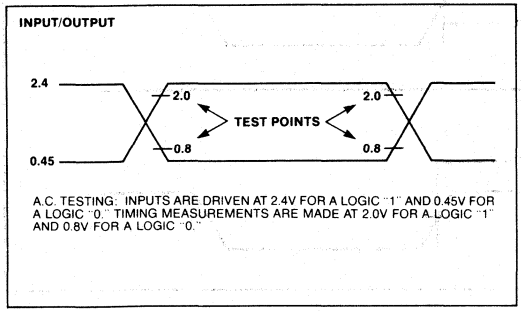

A.C. TESTING: INPUTS ARE DRIVEN AT 2.4V FOR A LOGIC "1" AND 0.45V FOR A LOGIC "0". TIMING MEASUREMENTS ARE MADE AT 2.0V FOR A LOGIC "1" AND 0.8V FOR A LOGIC "0."

A.C. TESTING LOAD CIRCUIT

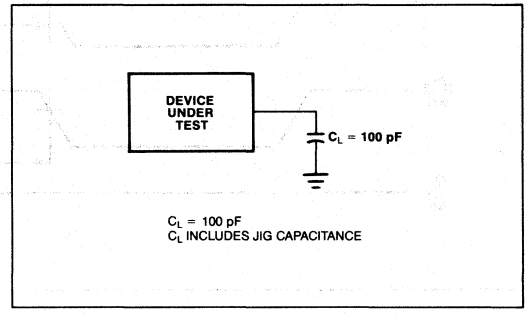

C_L = 100 pF
C_L INCLUDES JIG CAPACITANCE

WAVEFORMS

WRITE

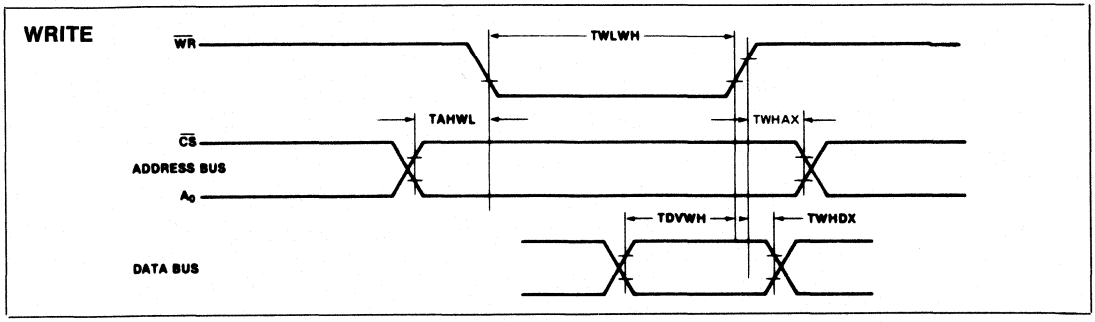

WAVEFORMS (Continued)

READ/INTA

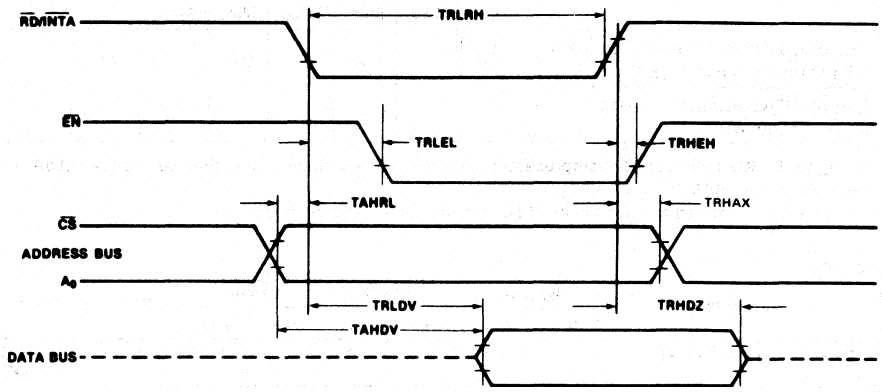

OTHER TIMING

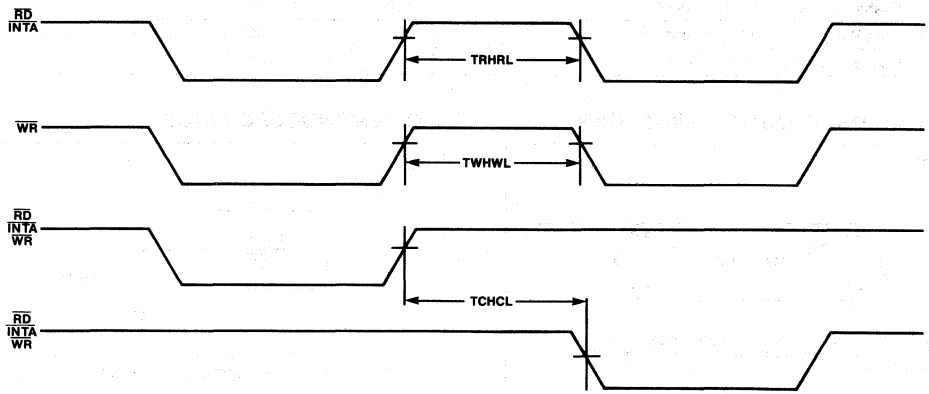

WAVEFORMS (Continued)

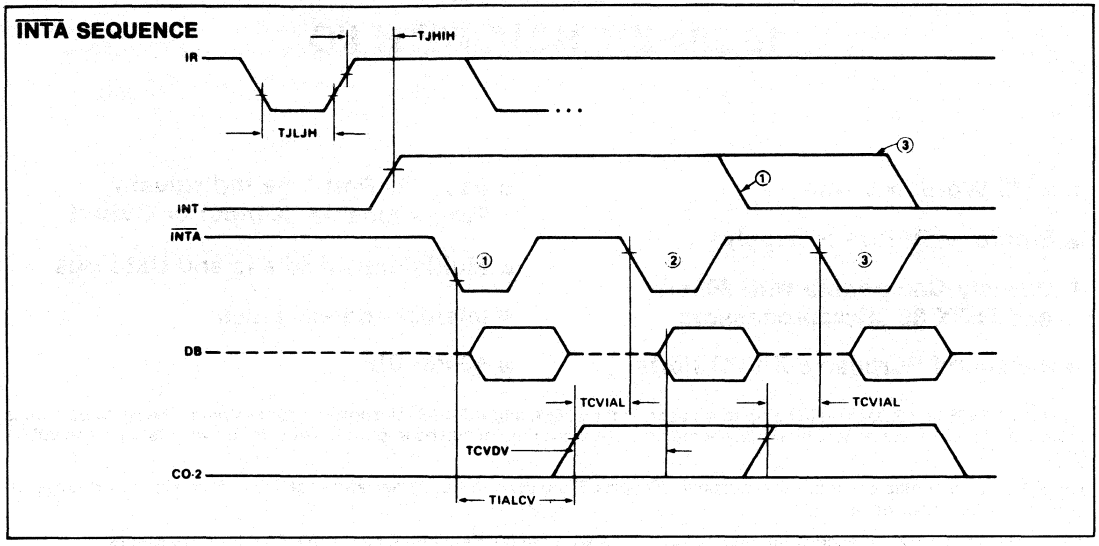

NOTES: Interrupt output must remain HIGH at least until leading edge of first INTA.
1. Cycle 1 in iAPX 86, iAPX 88 systems, the Data Bus is not active.

8355/8355-2
16,384-BIT ROM WITH I/O

- 2048 Words x 8 Bits
- Single +5V Power Supply
- Directly Compatible with 8085A and iAPX 88 Microprocessors
- 2 General Purpose 8-Bit I/O Ports
- Each I/O Port Line Individually Programmable as Input or Output
- Multiplexed Address and Data Bus
- Internal Address Latch
- 40-Pin DIP

The Intel® 8355 is a ROM and I/O chip to be used in the 8085A and iAPX 88 microprocessor systems. The ROM portion is organized as 2048 words by 8 bits. It has a maximum access time of 400 ns to permit use with no wait states in the 8085A CPU.

The I/O portion consists of 2 general purpose I/O ports. Each I/O port has 8 lines and each I/O port line is individually programmable as input or output.

The 8355-2 has a 300 ns access time for compatibility with the 8085A-2 and 5 MHz iAPX 88 microprocessors.

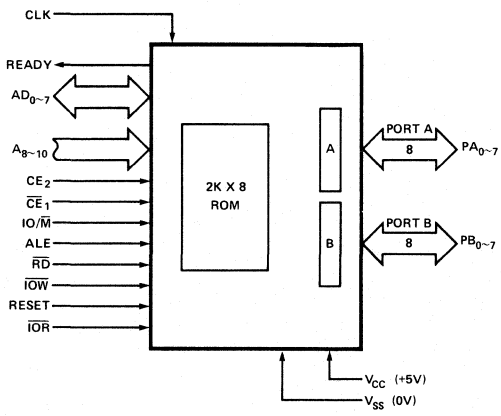

Figure 1. Block Diagram

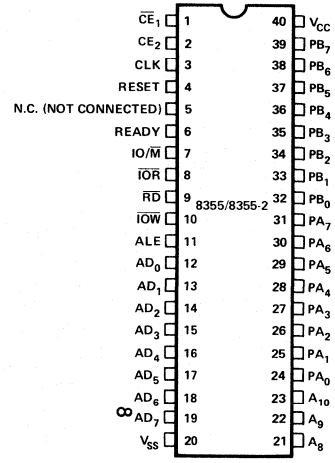

Figure 2. Pin Configuration

Table 1. Pin Description

Symbol	Type	Name and Function
ALE	I	**Address Latch Enable:** When high, AD_{0-7}, IO/M, A_{8-10}, CE, and $\overline{CE}$ enter address latched. The signals (AD, IO/M, A_{8-10}, CE, $\overline{CE}$) are latched in at the trailing edge of ALE.
AD_{0-7}	I	**Address/Data Bus (Bidirectional):** The lower 8-bits of the ROM or I/O address are applied to the bus lines when ALE is high. During an I/O cycle, Port A or B is selected based on the latched value of AD_0. If $\overline{RD}$ or $\overline{IOR}$ is low when the latched chip enables are active, the output buffers present data on the bus.
A_{8-10}	I	**Address Bus:** High order bits of the ROM address. They do not affect I/O operations.
CE_1 $\overline{CE_2}$	I	**Chip Enable:** is active low and $\overline{CE_2}$ is active *high*. The 8355 can be accessed only when *BOTH* Chip Enables are active at the time the ALE signal latches them up. If either Chip Enable input is not active, the AD_{0-7} and READY outputs will be in a high impedance state.
IO/M	I	**I/O Memory:** If the latched IO/M is high when $\overline{RD}$ is low, the output data comes from an I/O port. If it is low, the output data comes from the ROM.
$\overline{RD}$	I	**Read:** If the latched Chip Enables are active when $\overline{RD}$ goes low, the AD_{0-7} output buffers are enabled and output either the selected ROM location or I/O port. When both $\overline{RD}$ and $\overline{IOR}$ are high, the AD_{0-7} output buffers are 3-state.
$\overline{IOW}$	I	**I/O Write:** If the latched Chip Enables are active, a low on $\overline{IOW}$ causes the output port pointed to by the latched value of AD_0 to be written with the data on AD_{0-7}. The state of IO/M is ignored.
CLK	I	**Clock:** Used to force the READY into its high impedance state after it has been forced low by CE low, $\overline{CE}$ high and ALE high.
READY	O	**READY:** A 3-state output controlled by CE_1, $\overline{CE_2}$, ALE and CLK. READY is forced low when the Chip Enables are active during the time ALE is high, and remains low until the rising edge of the next CLK.
PA_{0-7}	I/O	**Port A:** General purpose I/O pins. Their input/output direction is determined by the contents of Data Direction Register (DDR). Port A is selected for write operations when the Chip Enables are active and $\overline{IOW}$ is low and a 0 was previously latched from AD_0. Read operation is selected by either $\overline{IOR}$ low and active Chip Enables and AD_0 low, *or* IO/M high, $\overline{RD}$ low, active chip enables, and AD_0 low.
PB_{0-7}	I/O	**Port B:** This general purpose I/O port is identical to Port A except that it is selected by a 1 latched from AD_0.
RESET	I	**Reset:** An input high causes all pins in Port A and B to assume input mode.
$\overline{IOR}$	I	**I/O Read:** When the Chip Enables are active, a low on $\overline{IOR}$ will output the selected I/O port onto the AD bus. $\overline{IOR}$ low performs the same function as the combination IO/M high and $\overline{RD}$ low. When $\overline{IOR}$ is not used in a system, $\overline{IOR}$ should be tied to V_{CC} ("1").
V_{CC}		**Voltage:** +5 volt supply.
V_{SS}		**Ground:** Ground Reference.

FUNCTIONAL DESCRIPTION

ROM Section

The 8355 contains an 8-bit address latch which allows it to interface directly to MCS-48, MCS-85, and iAPX 88 Microcomputers without additional hardware.

The ROM section of the chip is addressed by an 11-bit address and the Chip Enables. The address and levels on the Chip Enable pins are latched into the address latches on the falling edge of ALE. If the latched Chip Enables are active and IO/$\overline{M}$ is low when $\overline{RD}$ goes low, the contents of the ROM location addressed by the latched address are put out through AD_{0-7} output buffers.

I/O Section

The I/O section of the chip is addressed by the latched value of AD_{0-1}. Two 8-bit Data Direction Registers (DDR) in 8355 determine the input/output status of each pin in the corresponding ports. A "0" in a particular bit position of a DDR signifies that the corresponding I/O port bit is in the input mode. A "1" in a particular bit position signifies that the corresponding I/O port bit is in the output mode. In this manner the I/O ports of the 8355 are bit-by-bit programmable as inputs or outputs. The table summarizes port and DDR designation. DDR's cannot be read.

AD_1	AD_0	Selection
0	0	Port A
0	1	Port B
1	0	Port A Data Direction Register (DDR A)
1	1	Port B Data Direction Register (DDR B)

When $\overline{IOW}$ goes low and the Chip Enables are active, the data on the AD_{0-7} is written into I/O port selected by the latched value of AD_{0-1}. During this operation all I/O bits of the selected port are affected, regardless of their I/O mode and the state of IO/$\overline{M}$. The actual output level does not change until $\overline{IOW}$ returns high (glitch free output).

A port can be read out when the latched Chip Enables are active and either $\overline{RD}$ goes low with IO/$\overline{M}$ high, or $\overline{IOR}$ goes low. Both input and output mode bits of a selected port will appear on lines AD_{0-7}.

To clarify the function of the I/O ports and Data Direction Registers, the following diagram shows the configuration of one bit of PORT A and DDR A. The same logic applies to PORT B and DDR B.

Note that hardware RESET or writing a zero to the DDR latch will cause the output latch's output buffer to be disabled, preventing the data in the output latch from being passed through to the pin. This is equivalent to putting the port in the input mode. Note also that the data can be written to the Output Latch even though the Output Buffer has been disabled. This enables a port to be initialized with a value prior to enabling the output.

The diagram also shows that the contents of PORT A and PORT B can be read even when the ports are configured as outputs.

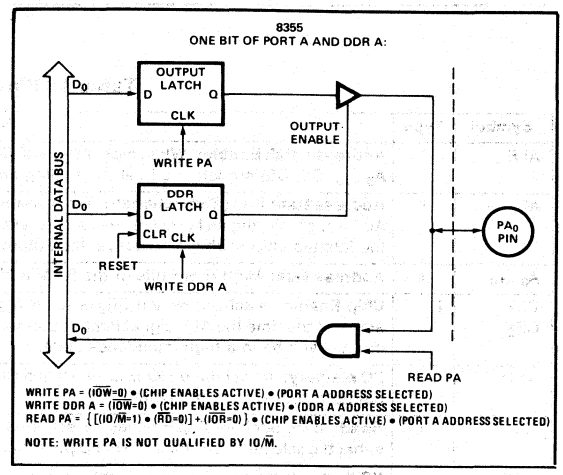

Figure 3. 8355 One Bit of Port A and DDR A

System Interface with 8085A and iAPX 88

A system using the 8355 can use either one of the two I/O Interface techniques:

- Standard I/O
- Memory Mapped I/O

If a standard I/O technique is used, the system can use the feature of both CE and $\overline{CE}$. By using a combination of unused address lines A_{11-15} and the Chip Enable inputs, the system can use up to 5 each 8355's without requiring a CE decoder. See Figure 5a and 5b.

If a memory mapped I/O approach is used the 8355 will be selected by the combination of both the Chip Enables and IO/$\overline{M}$ using the AD_{8-15} address lines. See Figure 4.

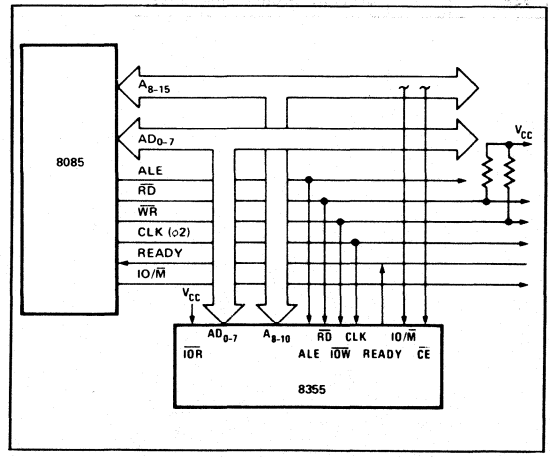

Figure 4. 8355 in 8085A System (Memory-Mapped I/O)

iAPX 88 FIVE CHIP SYSTEM:

- 1.25 K Bytes RAM
- 2 K Bytes ROM
- 38 I/O Pins
- 1 Internal Timer
- 2 Interrupt Levels

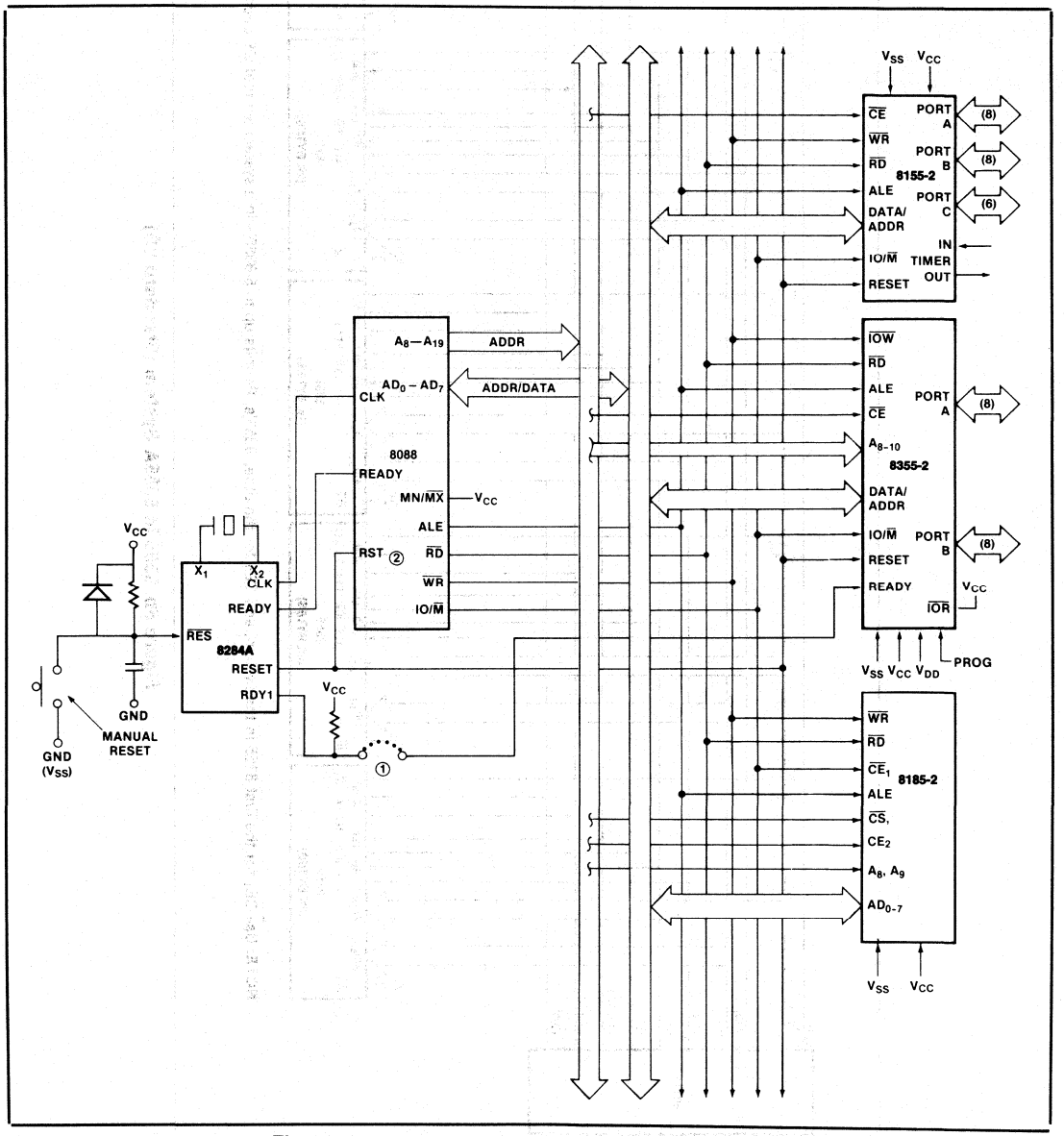

Figure 5a. iAPX 88 Five Chip System Configuration

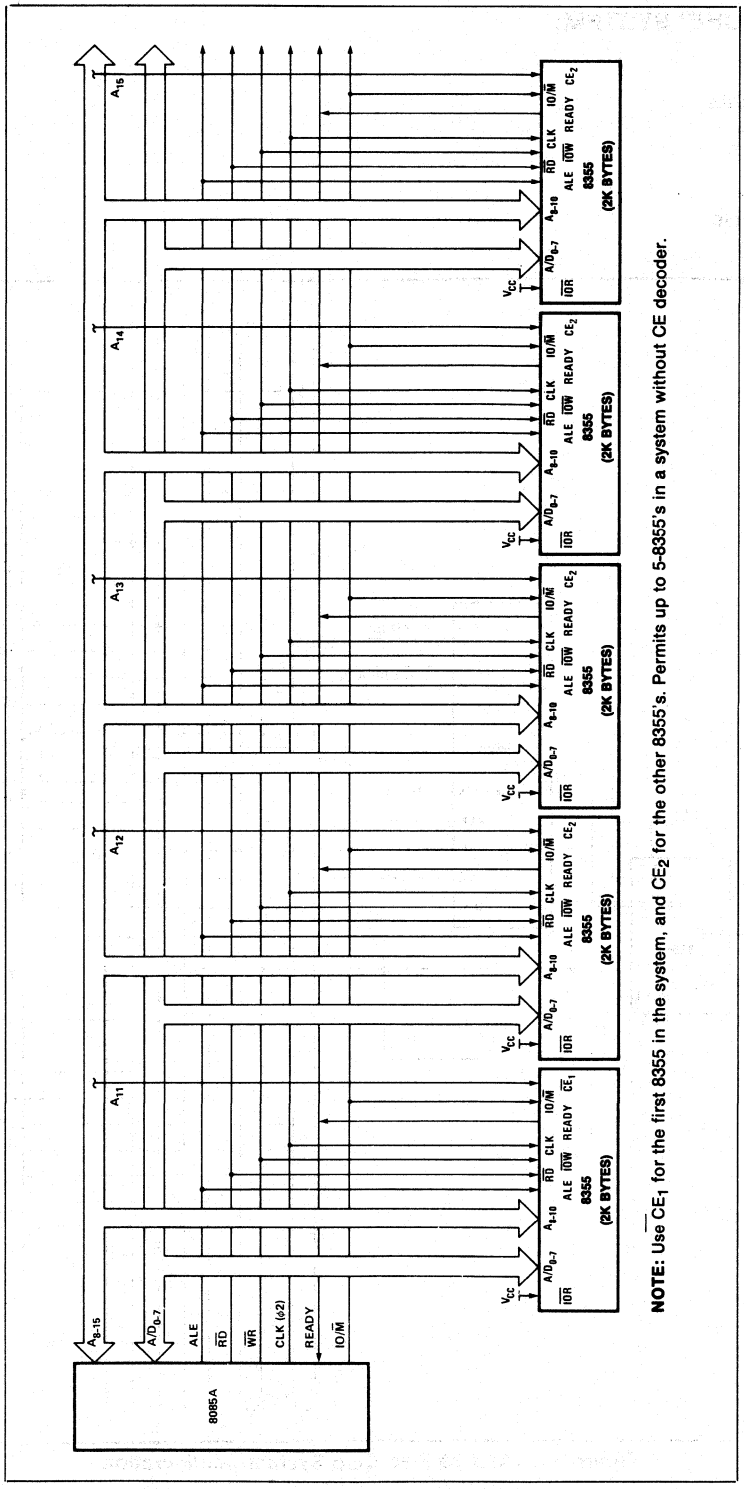

NOTE: Use $\overline{CE}_1$ for the first 8355 in the system, and CE_2 for the other 8355's. Permits up to 5-8355's in a system without CE decoder.

Figure 5b. 8355 in 8085A System (Standard I/O)

ABSOLUTE MAXIMUM RATINGS*

Temperature Under Bias ..... 0°C to +70°C
Storage Temperature ..... -65°C to +150°C
Voltage on Any Pin
With Respect to Ground ..... -0.5V to +7V
Power Dissipation 1.5W

**NOTICE: Stresses above those listed under "Absolute Maximum Ratings" may cause permanent damage to the device. This is a stress rating only and functional operation of the device at these or any other conditions above those indicated in the operational sections of this specification is not implied. Exposure to absolute maximum rating conditions for extended periods may affect device reliability.*

D.C. CHARACTERISTICS (T_A = 0°C to 70°C; V_{CC} = 5V ± 5%)

Symbol	Parameter	Min.	Max.	Unit	Test Conditions
V_{IL}	Input Low Voltage	-0.5	0.8	V	V_{CC} = 5.0V
V_{IH}	Input High Voltage	2.0	V_{CC}+0.5	V	V_{CC} = 5.0V
V_{OL}	Output Low Voltage		0.45	V	I_{OL} = 2mA
V_{OH}	Output High Voltage	2.4		V	I_{OH} = -400μA
I_{IL}	Input Leakage		10	μA	$0V \leq V_{IN} \leq V_{CC}$
I_{LO}	Output Leakage Current		±10	μA	$0.45V \leq V_{OUT} \leq V_{CC}$
I_{CC}	V_{CC} Supply Current		180	mA	

A.C. CHARACTERISTICS (T_A = 0°C to 70°C; V_{CC} = 5V ± 5%)

		8355		8355-2		
Symbol	Parameter	Min.	Max.	Min.	Max.	Units
t_{CYC}	Clock Cycle Time	320		200		ns
T_1	CLK Pulse Width	80		40		ns
T_2	CLK Pulse Width	120		70		ns
t_f,t_r	CLK Rise and Fall Time		30		30	ns
t_{AL}	Address to Latch Set Up Time	50		30		ns
t_{LA}	Address Hold Time after Latch	80		30		ns
t_{LC}	Latch to READ/WRITE Control	100		40		ns
t_{RD}	Valid Data Out Delay from READ Control		170		140	ns
t_{AD}	Address Stable to Data Out Valid		400		330	ns
t_{LL}	Latch Enable Width	100		70		ns
t_{RDF}	Data Bus Float after READ	0	100	0	85	ns
t_{CL}	READ/WRITE Control to Latch Enable	20		10		ns
t_{CC}	READ/WRITE Control Width	250		200		ns
t_{DW}	Data In to Write Set Up Time	150		150		ns
t_{WD}	Data In Hold Time After WRITE	10		10		ns
t_{WP}	WRITE to Port Output		400		400	ns
t_{PR}	Port Input Set Up Time	50		50		ns
t_{RP}	Port Input Hold Time	50		50		ns
t_{RYH}	READY HOLD Time	0	160	0	160	ns
t_{ARY}	ADDRESS (CE) to READY		160		160	ns
t_{RV}	Recovery Time Between Controls	300		200		ns
t_{RDE}	READ Control to Data Bus Enable	10		10		ns

A.C. TESTING INPUT, OUTPUT WAVEFORM

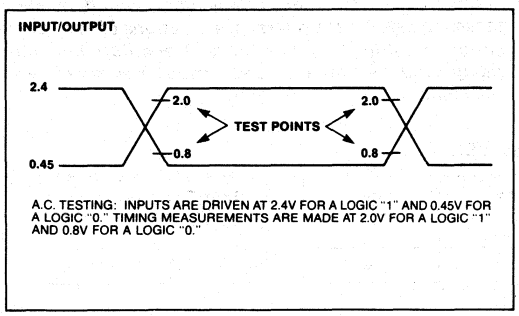

A.C. TESTING: INPUTS ARE DRIVEN AT 2.4V FOR A LOGIC "1" AND 0.45V FOR A LOGIC "0." TIMING MEASUREMENTS ARE MADE AT 2.0V FOR A LOGIC "1" AND 0.8V FOR A LOGIC "0."

A.C. TESTING LOAD CIRCUIT

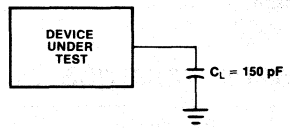

C_L = 150 pF
C_L INCLUDES JIG CAPACITANCE

WAVEFORMS

ROM READ AND I/O READ AND WRITE

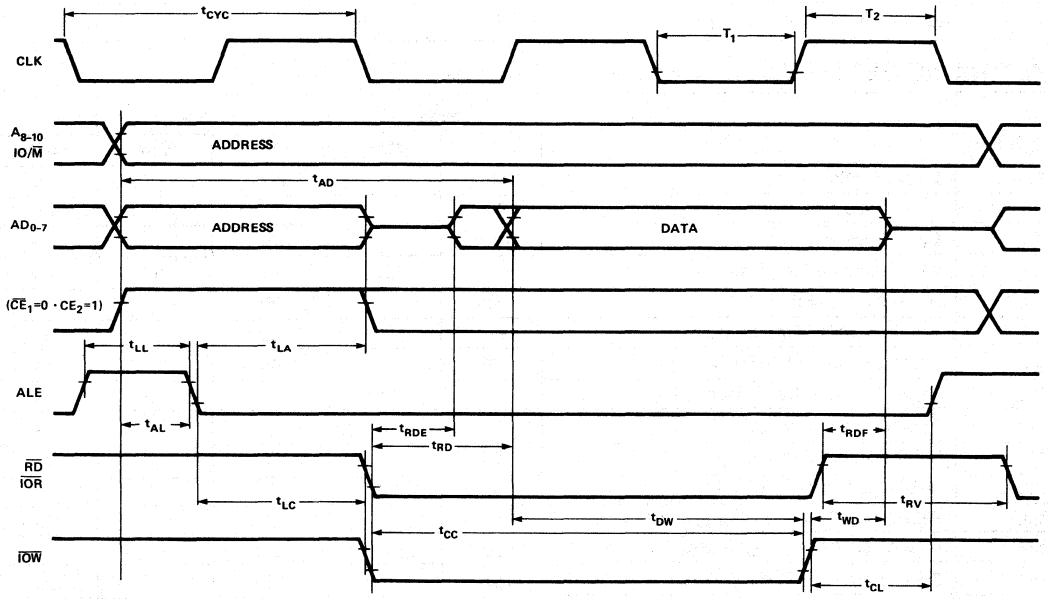

8355 CLOCK SPECIFICATIONS

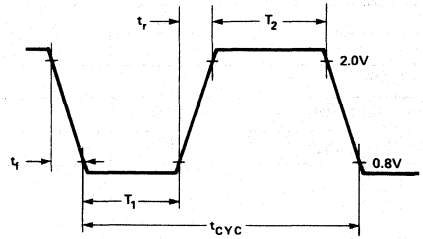

WAVEFORMS (Continued)

INPUT MODE

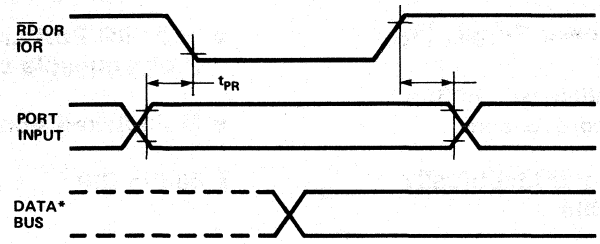

OUTPUT MODE

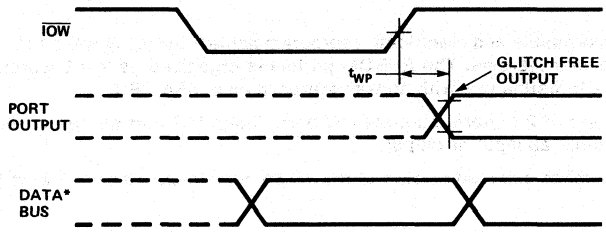

*DATA BUS TIMING IS SHOWN IN FIGURE 4.

WAIT STATE

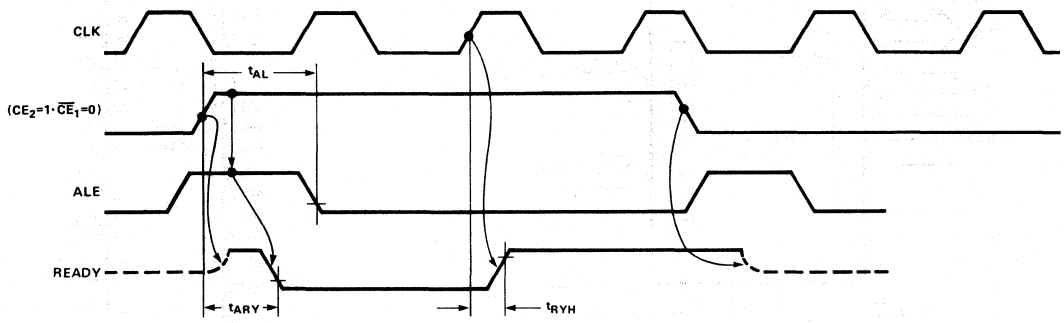

NOTE: Ready = 0.

8755A/8755A-2
16,384-BIT EPROM WITH I/O

- 2048 Words x 8 Bits
- Single +5V Power Supply (V_{CC})
- Directly Compatible with 8085A and 8088 Microprocessors
- U.V. Erasable and Electrically Reprogrammable
- Internal Address Latch
- 2 General Purpose 8-Bit I/O Ports
- Each I/O Port Line Individually Programmable as Input or Output
- Multiplexed Address and Data Bus
- 40-Pin DIP

The Intel® 8755A is an erasable and electrically reprogrammable ROM (EPROM) and I/O chip to be used in the 8085A and 8088 microprocessor systems. The EPROM portion is organized as 2048 words by 8 bits. It has a maximum access time of 450 ns to permit use with no wait states in an 8085A CPU.

The I/O portion consists of 2 general purpose I/O ports. Each I/O port has 8 port lines, and each I/O port line is individually programmable as input or output.

The 8755A-2 is a high speed selected version of the 8755A compatible with the 5 MHz 8085A-2 and the 5 MHz 8088.

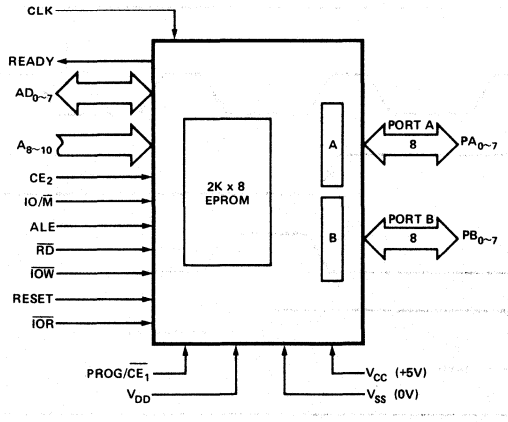

Figure 1. Block Diagram

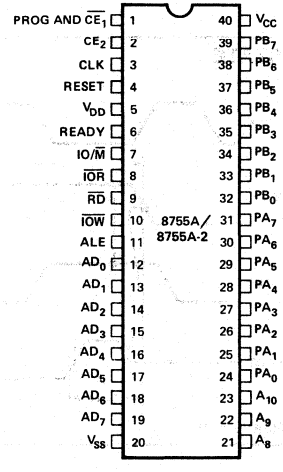

Figure 2. Pin Configuration

Intel Corporation Assumes No Responsibilty for the Use of Any Circuitry Other Than Circuitry Embodied in an Intel Product. No Other Circuit Patent Licenses are Implied.
© INTEL CORPORATION, 1980

Table 1. Pin Description

Symbol	Type	Name and Function
ALE	I	**Address Latch Enable:** When Address Latch Enable goes *high*, AD_{0-7}, IO/M, A_{8-10}, CE_2, and $\overline{CE_1}$ enter the address latches. The signals (AD, IO/M, A_{8-10}, CE) are latched in at the trailing edge of ALE.
AD_{0-7}	I	**Bidirectional Address/Data Bus:** The lower 8-bits of the PROM or I/O address are applied to the bus lines when ALE is high. During an I/O cycle, Port A or B are selected based on the latched value of AD_0. IF $\overline{RD}$ or $\overline{IOR}$ is low when the latched Chip Enables are active, the output buffers present data on the bus.
A_{8-10}	I	**Address:** These are the high order bits of the PROM address. They do not affect I/O operations.
PROG/$\overline{CE_1}$ CE_2	I	**Chip Enable Inputs:** $\overline{CE_1}$ is active low and CE_2 is active high. The 8755A can be accessed only when *both* Chip Enables are active at the time the ALE signal latches them up. If either Chip Enable input is not active, the AD_{0-7} and READY outputs will be in a high impedance state.$\overline{CE_1}$ is also used as a programming pin. (See section on programming.)
IO/$\overline{M}$	I	**I/O Memory:** If the latched IO/$\overline{M}$ is high when $\overline{RD}$ is low, the output data comes from an I/O port. If it is low the output data comes from the PROM.
$\overline{RD}$	I	**Read:** If the latched Chip Enables are active when RD goes low, the AD_{0-7} output buffers are enabled and output either the selected PROM location or I/O port. When both $\overline{RD}$ and $\overline{IOR}$ are high, the AD_{0-7} output buffers are 3-stated.
$\overline{IOW}$	I	**I/O Write:** If the latched Chip Enables are active, a low on $\overline{IOW}$ causes the output port pointed to by the latched value of AD_0 to be written with the data on AD_{0-7}. The state of IO/$\overline{M}$ is ignored.
CLK	I	**Clock:** The CLK is used to force the READY into its high impedance state after it has been forced low by $\overline{CE_1}$ low, CE_2 high, and ALE high.

Symbol	Type	Name and Function
READY	O	**Ready** is a 3-state output controlled by CE_2, $\overline{CE_1}$, ALE and CLK. READY is forced low when the Chip Enables are actove during the time ALE is high, and remains low until the rising edge of the next CLK. (See Figure 6.)
PA_{0-7}	I/O	**Port A:** These are general purpose I/O pins. Their input/output direction is determined by the contents of Data Direction Register (DDR). Port A is selected for write operations when the Chip Enables are active and $\overline{IOW}$ is low and a 0 was previously latched from AD_0, AD_1. Read Operation is selected by either $\overline{IOR}$ low and active Chip Enables and AD_0 and AD_1 low, *or* IO/$\overline{M}$ high, $\overline{RD}$ low, active Chip Enables, and AD_0 and AD_1 low.
PB_{0-7}	I/O	**Port B:** This general purpose I/O port is identical to Port A except that it is selected by a 1 latched from AD_0 and a 0 from AD_1.
RESET	I	**Reset:** In normal operation, an input high on RESET causes all pins in Ports A and B to assume input mode (clear DDR register).
$\overline{IOR}$	I	**I/O Read:** When the Chip Enables are active, a low on $\overline{IOR}$ will output the selected I/O port onto the AD bus. $\overline{IOR}$ low performs the same function as the combination of IO/$\overline{M}$ high and $\overline{RD}$ low. When $\overline{IOR}$ is not used in a system, $\overline{IOR}$ should be tied to V_{CC} ("1").
V_{CC}		**Power:** +5 volt supply.
V_{SS}		**Ground:** Reference.
V_{DD}		**Power Supply:** V_{DD} is a programming voltage, and must be tied to V_{CC} when the 8755A is being read. For programming, a high voltage is supplied with V_{DD} = 25V, typical. (See section on programming.)

FUNCTIONAL DESCRIPTION

PROM Section

The 8755A contains an 8-bit address latch which allows it to interface directly to MCS-48, MCS-85 and iAPX 88/10 Microcomputers without additional hardware.

The PROM section of the chip is addressed by the 11-bit address and CE. The address, $\overline{CE}_1$ and CE_2 are latched into the address latches on the falling edge of ALE. If the latched Chip Enables are active and IO/$\overline{M}$ is low when $\overline{RD}$ goes low, the contents of the PROM location addressed by the latched address are put out on the AD_{0-7} lines (provided that V_{DD} is tied to V_{CC}.)

I/O Section

The I/O section of the chip is addressed by the latched value of AD_{0-1}. Two 8-bit Data Direction Registers (DDR) in 8755A determine the input/output status of each pin in the corresponding ports. A "0" in a particular bit position of a DDR signifies that the corresponding I/O port bit is in the input mode. A "1" in a particular bit position signifies that the corresponding I/O port bit is in the output mode. In this manner the I/O ports of the 8755A are bit-by-bit programmable as inputs or outputs. The table summarizes port and DDR designation. DDR's cannot be read.

AD_1	AD_0	Selection
0	0	Port A
0	1	Port B
1	0	Port A Data Direction Register (DDR A)
1	1	Port B Data Direction Register (DDR B)

When $\overline{IOW}$ goes low and the Chip Enables are active, the data on the AD is written into I/O port selected by the latched value of AD_{0-1}. During this operation all I/O bits of the selected port are affected, regardless of their I/O mode and the state of IO/$\overline{M}$. The actual output level does not change until $\overline{IOW}$ returns high. (glitch free output)

A port can be read out when the latched Chip Enables are active and either $\overline{RD}$ goes low with IO/$\overline{M}$ high, or $\overline{IOR}$ goes low. Both input and output mode bits of a selected port will appear on lines AD_{0-7}.

To clarify the function of the I/O Ports and Data Direction Registers, the following diagram shows the configuration of one bit of PORT A and DDR A. The same logic applies to PORT B and DDR B.

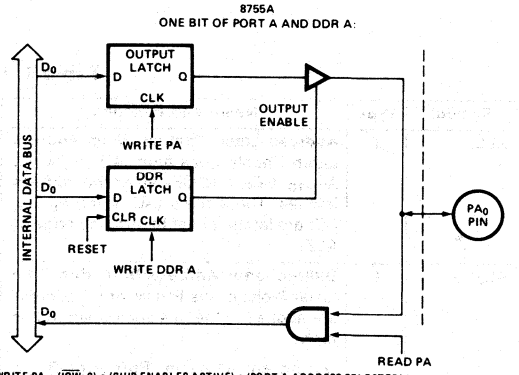

WRITE PA = ($\overline{IOW}$=0) • (CHIP ENABLES ACTIVE) • (PORT A ADDRESS SELECTED)
WRITE DDR A = ($\overline{IOW}$=0) • (CHIP ENABLES ACTIVE) • (DDR A ADDRESS SELECTED)
READ PA = {[(IO/$\overline{M}$=1) • ($\overline{RD}$=0)] + ($\overline{IOR}$=0)} • (CHIP ENABLES ACTIVE) • (PORT A ADDRESS SELECTED)
NOTE: WRITE PA IS NOT QUALIFIED BY IO/$\overline{M}$.

Note that hardware RESET or writing a zero to the DDR latch will cause the output latch's output buffer to be disabled, preventing the data in the Output Latch from being passed through to the pin. This is equivalent to putting the port in the input mode. Note also that the data can be written to the Output Latch even though the Output Buffer has been disabled. This enables a port to be initialized with a value prior to enabling the output.

The diagram also shows that the contents of PORT A and PORT B can be read even when the ports are configured as outputs.

TABLE 1. 8755A PROGRAMMING MODULE CROSS REFERENCE

MODULE NAME	USE WITH
UPP 955	UPP(4)
UPP UP2(2)	UPP 855
PROMPT 975	PROMPT 80/85(3)
PROMPT 475	PROMPT 48(1)

NOTES:
1. Described on p. 13-34 of 1978 Data Catalog.
2. Special adaptor socket.
3. Described on p. 13-39 of 1978 Data Catalog.
4. Described on p. 13-71 of 1978 Data Catalog.

ERASURE CHARACTERISTICS

The erasure characteristics of the 8755A are such that erasure begins to occur when exposed to light with wavelengths shorter than approximately 4000 Angstroms (Å). It should be noted that sunlight and certain types of fluorescent lamps have wavelengths in the 3000-4000Å range. Data show that constant exposure to room level fluorescent lighting could erase the typical 8755A in approximately 3 years while it would take approximately 1 week to cause erasure when exposed to direct sunlight. If the 8755A is to be exposed to these types of lighting conditions for extended periods of time, opaque labels are available from Intel which should be placed over the 8755 window to prevent unintentional erasure.

The recommended erasure procedure for the 8755A is exposure to shortwave ultraviolet light which has a wavelength of 2537 Angstroms (Å). The integrated dose (i.e., UV intensity X exposure time) for erasure should be a minimum of 15W-sec/cm^2. The erasure time with this dosage is approximately 15 to 20 minutes using an ultraviolet lamp with a 12000μW/cm^2 power rating. The 8755A should be placed within one inch from the lamp tubes during erasure. Some lamps have a filter on their tubes and this filter should be removed before erasure.

PROGRAMMING

Initially, and after each erasure, all bits of the EPROM portions of the 8755A are in the "1" state. Information is introduced by selectively programming "0" into the desired bit locations. A programmed "0" can only be changed to a "1" by UV erasure.

The 8755A can be programmed on the Intel® Universal PROM Programmer (UPP), and the PROMPT™ 80/85 and PROMPT-48™ design aids. The appropriate programming modules and adapters for use in programming both 8755A's and 8755's are shown in Table 1.

The program mode itself consists of programming a single address at a time, giving a single 50 msec pulse for every address. Generally, it is desirable to have a verify cycle after a program cycle for the same address as shown in the attached timing diagram. In the verify cycle (i.e., normal memory read cycle) 'V_{DD}' should be at +5V.

Preliminary timing diagrams and parameter values pertaining to the 8755A programming operation are contained in Figure 7.

SYSTEM APPLICATIONS

System Interface with 8085A and 8088

A system using the 8755A can use either one of the two I/O Interface techniques:

- Standard I/O
- Memory Mapped I/O

If a standard I/O technique is used, the system can use the feature of both CE_3 and $\overline{CE}_1$. By using a combination of unused address lines A_{11-15} and the Chip Enable inputs, the 8085A system can use up to 5 each 8755A's without requiring a CE decoder. See Figure 2a and 2b.

If a memory mapped I/O approach is used the 8755A will be selected by the combination of both the Chip Enables and IO/$\overline{M}$ using the AD_{8-15} address lines. See Figure 1.

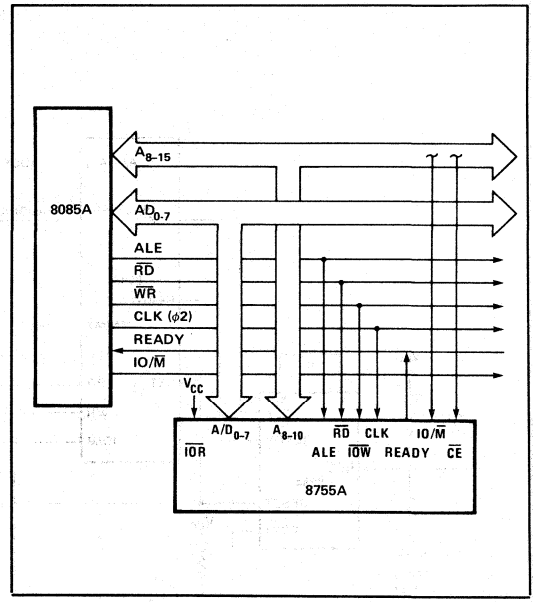

Figure 3. 8755A in 8085A System (Memory-Mapped I/O)

iAPX 88 FIVE CHIP SYSTEM

Figure 4 shows a five chip system containing:

- 1.25K Bytes RAM
- 2K Bytes ROM
- 38 I/O Pins
- 1 Interval Timer
- 2 Interrupt Levels

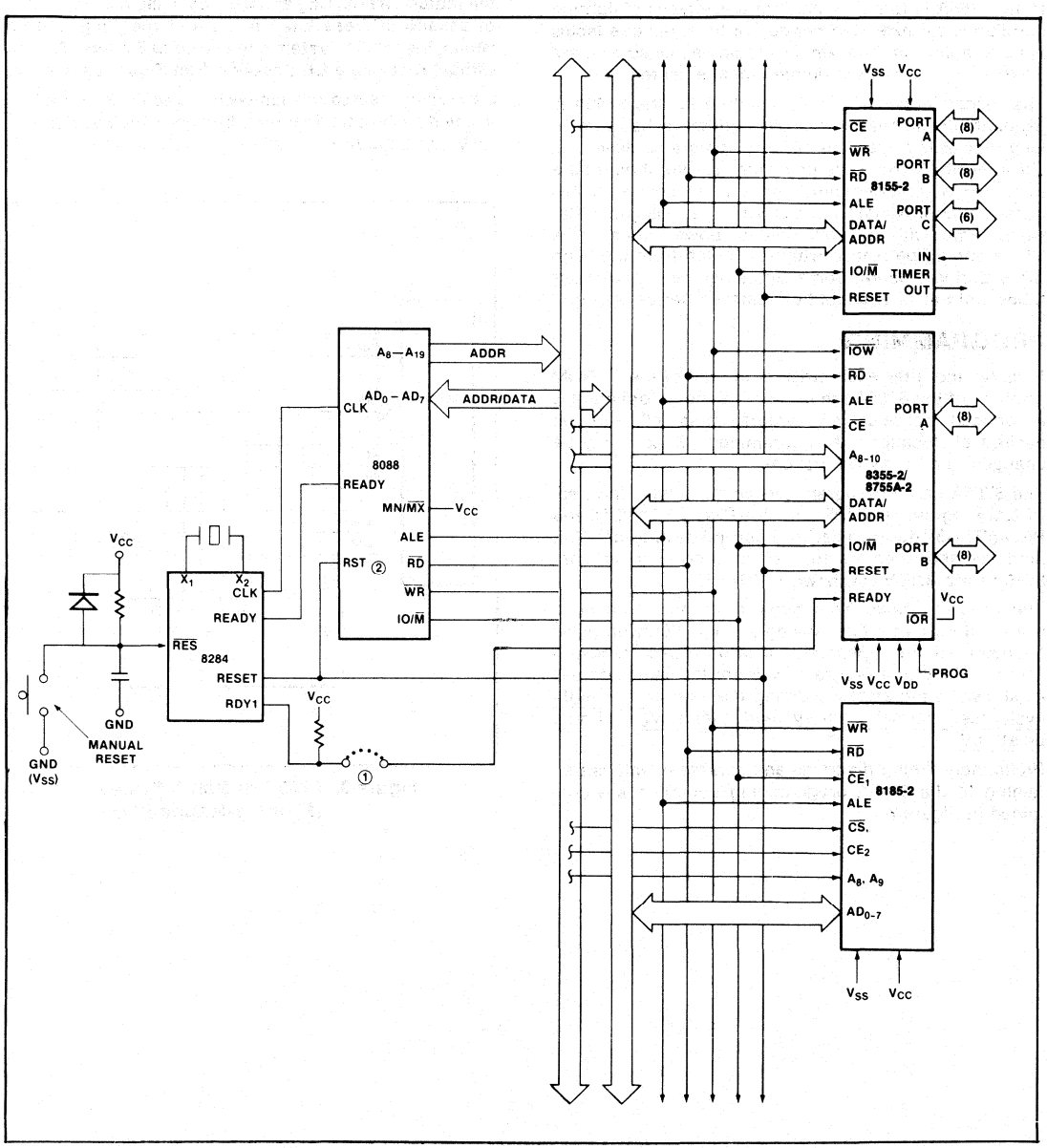

Figure 4. iAPX 88 Five Chip System Configuration

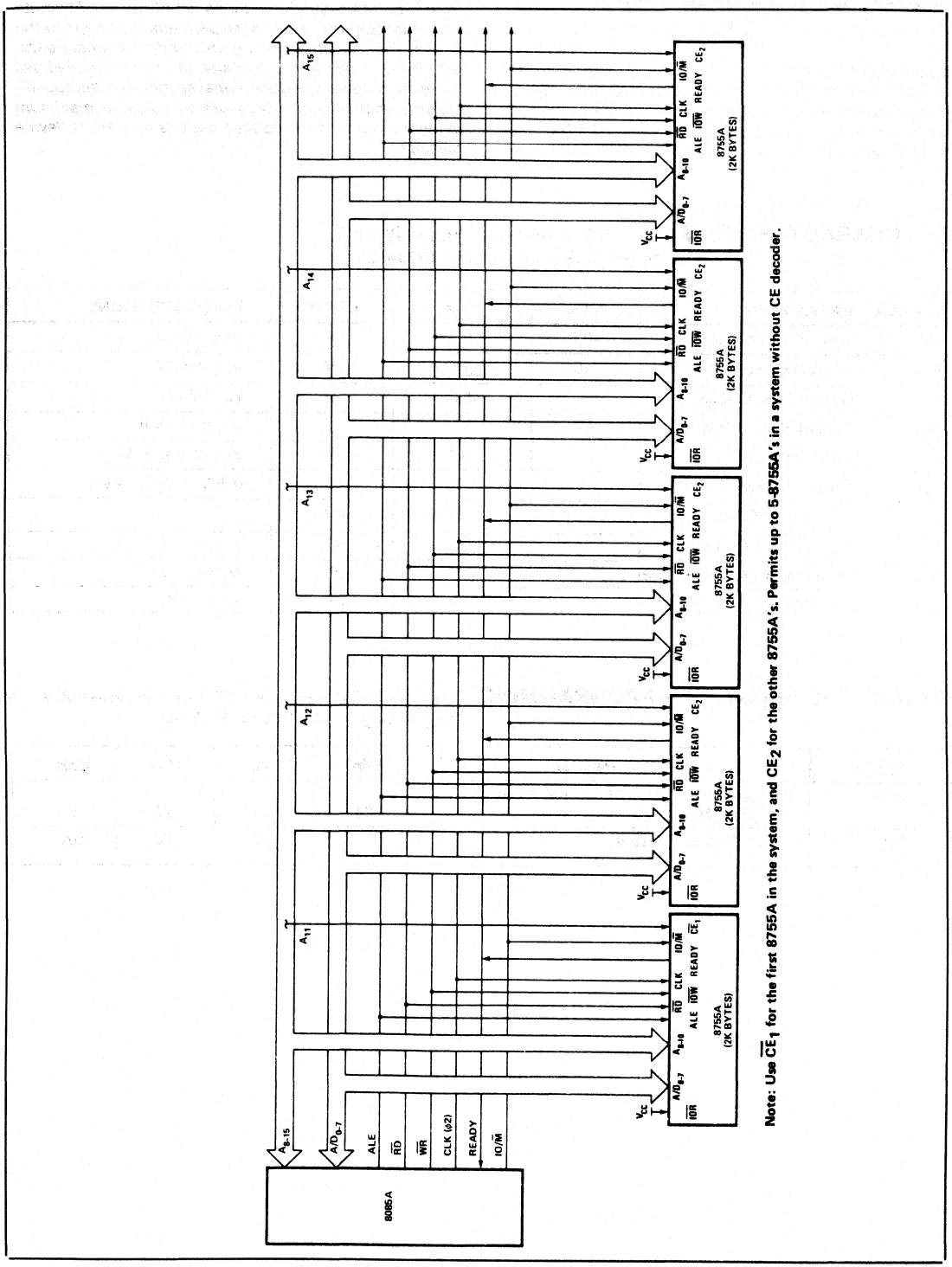

Note: Use $\overline{CE}_1$ for the first 8755A in the system, and CE_2 for the other 8755A's. Permits up to 5-8755A's in a system without CE decoder.

Figure 5. 8755A in 8085A System (Standard I/O)

ABSOLUTE MAXIMUM RATINGS*

Temperature Under Bias ..... 0°C to +70°C
Storage Temperature ..... -65°C to +150°C
Voltage on Any Pin
With Respect to Ground ..... -0.5V to +7V
Power Dissipation 1.5W

**NOTICE: Stresses above those listed under "Absolute Maximum Ratings" may cause permanent damage to the device. This is a stress rating only and functional operation of the device at these or any other conditions above those indicated in the operational sections of this specification is not implied. Exposure to absolute maximum rating conditions for extended periods may affect device reliability.*

D.C. CHARACTERISTICS

(T_A = 0°C to 70°, V_{CC} = V_{DD} = 5V ± 5%; V_{CC} = V_{DD} = 5V ±10% for 8755A-2)

SYMBOL	PARAMETER	MIN.	MAX.	UNITS	TEST CONDITIONS
V_{IL}	Input Low Voltage	-0.5	0.8	V	V_{CC} = 5.0V
V_{IH}	Input High Voltage	2.0	V_{CC}+0.5	V	V_{CC} = 5.0V
V_{OL}	Output Low Voltage		0.45	V	I_{OL} = 2mA
V_{OH}	Output High Voltage	2.4		V	I_{OH} = -400μA
I_{IL}	Input Leakage		10	μA	$V_{SS} \leq V_{IN} \leq V_{CC}$
I_{LO}	Output Leakage Current		±10	μA	$0.45V \leq V_{OUT} \leq V_{CC}$
I_{CC}	V_{CC} Supply Current		180	mA	
I_{DD}	V_{DD} Supply Current		30	mA	V_{DD} = V_{CC}
C_{IN}	Capacitance of Input Buffer		10	pF	f_C = 1μHz
$C_{I/O}$	Capacitance of I/O Buffer		15	pF	f_C = 1μHz

D.C. CHARACTERISTICS—PROGRAMMING

(T_A = 0°C to 70°, V_{CC} = 5V ± 5%, V_{SS} = 0V, V_{DD} = 25V ±1V; V_{CC} = V_{DD} = 5V ±10% for 8755A-2)

Symbol	Parameter	Min.	Typ.	Max.	Unit
V_{DD}	Programming Voltage (during Write to EPROM)	24	25	26	V
I_{DD}	Prog Supply Current		15	30	mA

A.C. CHARACTERISTICS (T_A = 0°C to 70°, V_{CC} = 5V ± 5%; V_{CC} = V_{DD} = 5V ±10% for 8755A-2)

Symbol	Parameter	8755A		8755A-2 (Preliminary)		Units
		Min.	Max.	Min.	Max.	
t_{CYC}	Clock Cycle Time	320		200		ns
T_1	CLK Pulse Width	80		40		ns
T_2	CLK Pulse Width	120		70		ns
t_f,t_r	CLK Rise and Fall Time		30		30	ns
t_{AL}	Address to Latch Set Up Time	50		30		ns
t_{LA}	Address Hold Time after Latch	80		45		ns
t_{LC}	Latch to READ/WRITE Control	100		40		ns
t_{RD}	Valid Data Out Delay from READ Control*		170		140	ns
t_{AD}	Address Stable to Data Out Valid**		450		300	ns
t_{LL}	Latch Enable Width	100		70		ns
t_{RDF}	Data Bus Float after READ	0	100	0	85	ns
t_{CL}	READ/WRITE Control to Latch Enable	20		10		ns
t_{CC}	READ/WRITE Control Width	250		200		ns
t_{DW}	Data In to Write Set Up Time	150		150		ns
t_{WD}	Data In Hold Time After WRITE	30		10		ns
t_{WP}	WRITE to Port Output		400		300	ns
t_{PR}	Port Input Set Up Time	50		50		ns
t_{RP}	Port Input Hold Time to Control	50		50		ns
t_{RYH}	READY HOLD Time to Control	0	160	0	160	ns
t_{ARY}	ADDRESS (CE) to READY		160		160	ns
t_{RV}	Recovery Time Between Controls	300		200		ns
t_{RDE}	READ Control to Data Bus Enable	10		10		ns

NOTE:

C_{LOAD} = 150pF.

*Or $T_{AD} - (T_{AL} + T_{LC})$, whichever is greater.

**Defines ALE to Data Out Valid in conjunction with T_{AL}.

A.C. CHARACTERISTICS — PROGRAMMING (T_A = 0°C to 70°, V_{CC} = 5V ± 5%, V_{SS} = 0V, V_{DD} = 25V ±1V; V_{CC} = V_{DD} = 5V ±10% for 8755A-2)

Symbol	Parameter	Min.	Typ.	Max.	Unit
t_{PS}	Data Setup Time	10			ns
t_{PD}	Data Hold Time	0			ns
t_S	Prog Pulse Setup Time	2			μs
t_H	Prog Pulse Hold Time	2			μs
t_{PR}	Prog Pulse Rise Time	0.01	2		μs
t_{PF}	Prog Pulse Fall Time	0.01	2		μs
t_{PRG}	Prog Pulse Width	45	50		msec

A.C. TESTING INPUT, OUTPUT WAVEFORM

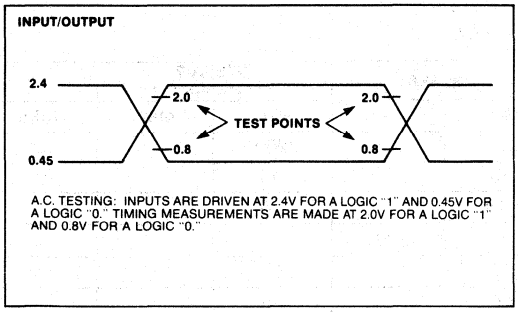

A.C. TESTING LOAD CIRCUIT

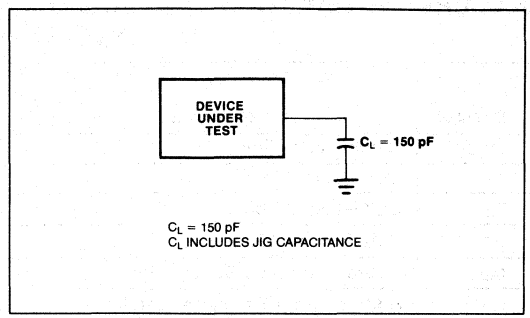

WAVEFORMS

CLOCK SPECIFICATION FOR 8755A

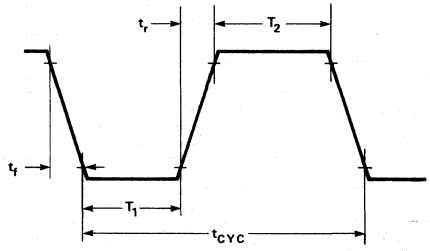

PROM READ, I/O READ AND WRITE

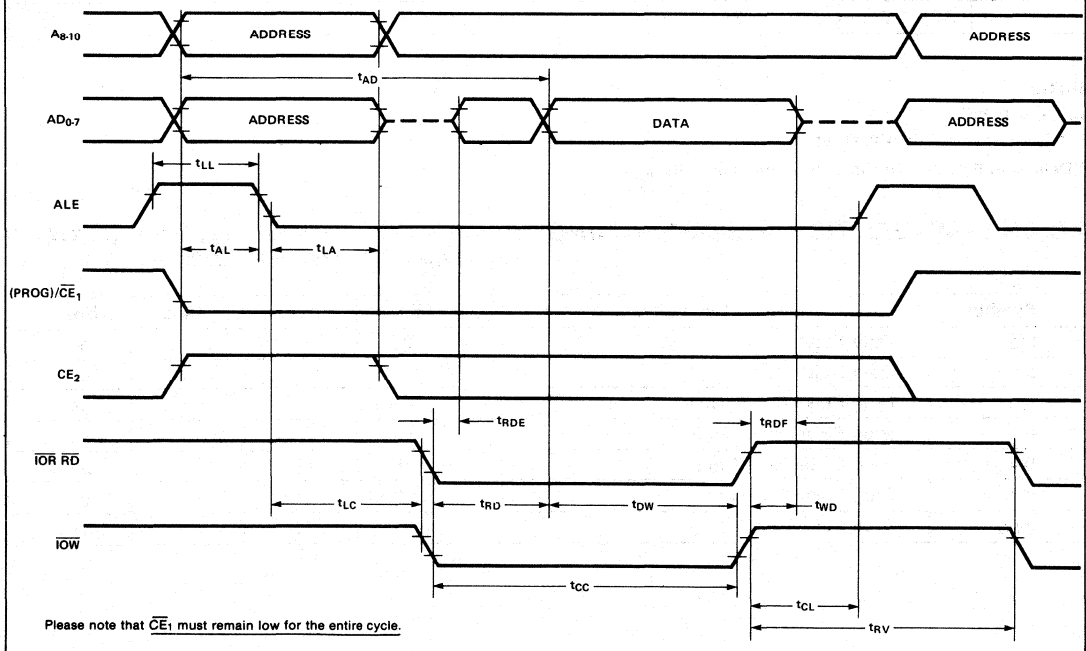

Please note that $\overline{CE_1}$ must remain low for the entire cycle.

WAVEFORMS (Continued)

I/O PORT

A. INPUT MODE

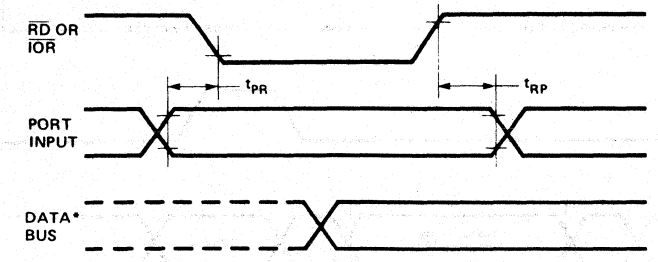

B. OUTPUT MODE

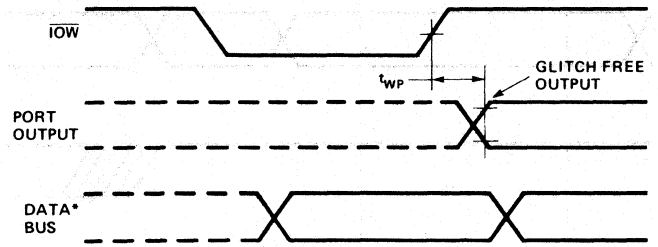

WAIT STATE (READY = 0)

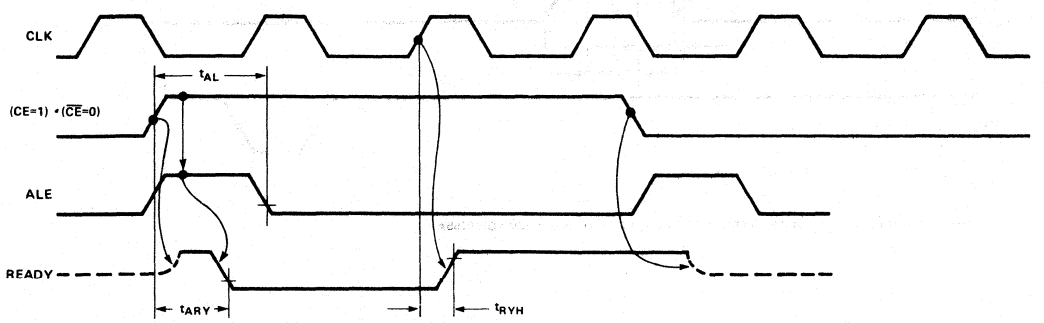

WAVEFORMS (Continued)

8755A PROGRAM MODE

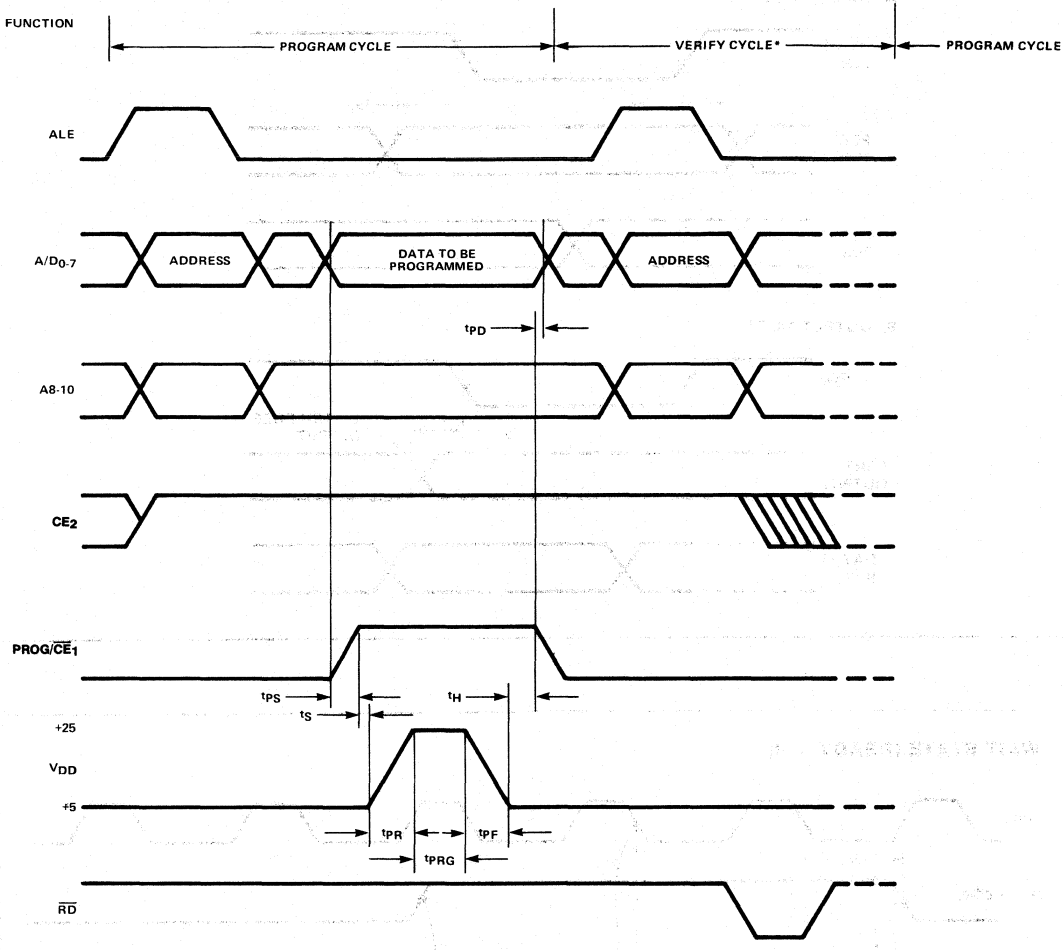

*VERIFY CYCLE IS A REGULAR MEMORY READ CYCLE (WITH V_{DD} = +5V FOR 8755A)

iAPX 86,88 Microprocessors

8

iAPX 86/10
16-BIT HMOS MICROPROCESSOR

8086/8086-2/8086-1

- **Direct Addressing Capability to 1 MByte of Memory**
- **Architecture Designed for Powerful Assembly Language and Efficient High Level Languages.**
- **14 Word, by 16-Bit Register Set with Symmetrical Operations**
- **24 Operand Addressing Modes**
- **Bit, Byte, Word, and Block Operations**
- **8 and 16-Bit Signed and Unsigned Arithmetic in Binary or Decimal Including Multiply and Divide**
- **Range of Clock Rates:**
  5 MHz for 8086,
  8 MHz for 8086-2,
  10 MHz for 8086-1
- **MULTIBUS™ System Compatible Interface**

The Intel iAPX 86/10 high performance 16-bit CPU is available in three clock rates: 5, 8 and 10 MHz. The CPU is implemented in N-Channel, depletion load, silicon gate technology (HMOS), and packaged in a 40-pin CerDIP package. The iAPX 86/10 operates in both single processor and multiple processor configurations to achieve high performance levels.

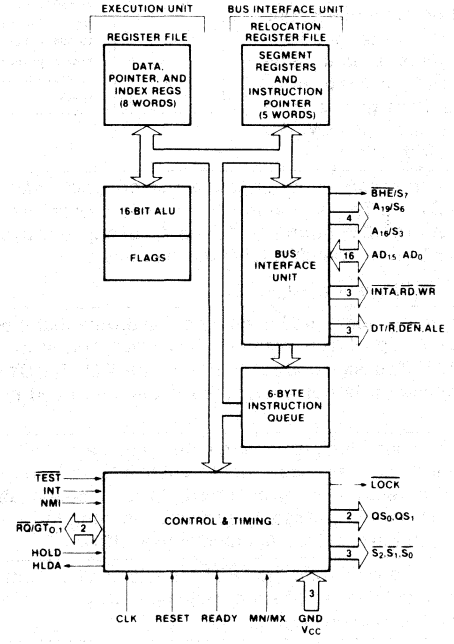

Figure 1. iAPX 86/10 CPU Block Diagram

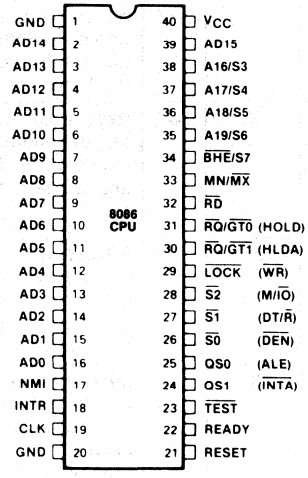

40 LEAD

Figure 2. iAPX 86/10 Pin Configuration

Table 1. Pin Description

The following pin function descriptions are for iAPX 86 systems in either minimum or maximum mode. The "Local Bus" in these descriptions is the direct multiplexed bus interface connection to the 8086 (without regard to additional bus buffers).

Symbol	Pin No.	Type	Name and Function
AD_{15}-AD_0	2-16, 39	I/O	**Address Data Bus:** These lines constitute the time multiplexed memory/IO address (T_1) and data (T_2, T_3, T_W, T_4) bus. A_0 is analogous to $\overline{BHE}$ for the lower byte of the data bus, pins D_7-D_0. It is LOW during T_1 when a byte is to be transferred on the lower portion of the bus in memory or I/O operations. Eight-bit oriented devices tied to the lower half would normally use A_0 to condition chip select functions. (See $\overline{BHE}$.) These lines are active HIGH and float to 3-state OFF during interrupt acknowledge and local bus "hold acknowledge."
A_{19}/S_6, A_{18}/S_5, A_{17}/S_4, A_{16}/S_3	35-38	O	**Address/Status:** During T_1 these are the four most significant address lines for memory operations. During I/O operations these lines are LOW. During memory and I/O operations, status information is available on these lines during T_2, T_3, T_W, and T_4. The status of the interrupt enable FLAG bit (S_5) is updated at the beginning of each CLK cycle. A_{17}/S_4 and A_{16}/S_3 are encoded as shown. This information indicates which relocation register is presently being used for data accessing. These lines float to 3-state OFF during local bus "hold acknowledge."
$\overline{BHE}/S_7$	34	O	**Bus High Enable/Status:** During T_1 the bus high enable signal ($\overline{BHE}$) should be used to enable data onto the most significant half of the data bus, pins D_{15}-D_8. Eight-bit oriented devices tied to the upper half of the bus would normally use $\overline{BHE}$ to condition chip select functions. $\overline{BHE}$ is LOW during T_1 for read, write, and interrupt acknowledge cycles when a byte is to be transferred on the high portion of the bus. The S_7 status information is available during T_2, T_3, and T_4. The signal is active LOW, and floats to 3-state OFF in "hold." It is LOW during T_1 for the first interrupt acknowledge cycle.
$\overline{RD}$	32	O	**Read:** Read strobe indicates that the processor is performing a memory of I/O read cycle, depending on the state of the S_2 pin. This signal is used to read devices which reside on the 8086 local bus. $\overline{RD}$ is active LOW during T_2, T_3 and T_W of any read cycle, and is guaranteed to remain HIGH in T_2 until the 8086 local bus has floated. This signal floats to 3-state OFF in "hold acknowledge."
READY	22	I	**READY:** is the acknowledgement from the addressed memory or I/O device that it will complete the data transfer. The READY signal from memory/IO is synchronized by the 8284A Clock Generator to form READY. This signal is active HIGH. The 8086 READY input is not synchronized. Correct operation is not guaranteed if the setup and hold times are not met.
INTR	18	I	**Interrupt Request:** is a level triggered input which is sampled during the last clock cycle of each instruction to determine if the processor should enter into an interrupt acknowledge operation. A subroutine is vectored to via an interrupt vector lookup table located in system memory. It can be internally masked by software resetting the interrupt enable bit. INTR is internally synchronized. This signal is active HIGH.
$\overline{TEST}$	23	I	**$\overline{TEST}$:** input is examined by the "Wait" instruction. If the $\overline{TEST}$ input is LOW execution continues, otherwise the processor waits in an "Idle" state. This input is synchronized internally during each clock cycle on the leading edge of CLK.

A_{17}/S_4	A_{16}/S_3	Characteristics
0 (LOW)	0	Alternate Data
0	1	Stack
1 (HIGH)	0	Code or None
1	1	Data
S_6 is 0 (LOW)		

$\overline{BHE}$	A_0	Characteristics
0	0	Whole word
0	1	Upper byte from/ to odd address
1	0	Lower byte from/ to even address
1	1	None

Table 1. Pin Description (Continued)

Symbol	Pin No.	Type	Name and Function
NMI	17	I	**Non-maskable interrupt:** an edge triggered input which causes a type 2 interrupt. A subroutine is vectored to via an interrupt vector lookup table located in system memory. NMI is not maskable internally by software. A transition from a LOW to HIGH initiates the interrupt at the end of the current instruction. This input is internally synchronized.
RESET	21	I	**Reset:** causes the processor to immediately terminate its present activity. The signal must be active HIGH for at least four clock cycles. It restarts execution, as described in the Instruction Set description, when RESET returns LOW. RESET is internally synchronized.
CLK	19	I	**Clock:** provides the basic timing for the processor and bus controller. It is asymmetric with a 33% duty cycle to provide optimized internal timing.
V_{CC}	40		**V_{CC}:** +5V power supply pin.
GND	1, 20		**Ground**
MN/$\overline{MX}$	33	I	**Minimum/Maximum:** indicates what mode the processor is to operate in. The two modes are discussed in the following sections.

The following pin function descriptions are for the 8086/8288 system in maximum mode (i.e., MN/$\overline{MX}$ = V_{SS}). Only the pin functions which are unique to maximum mode are described; all other pin functions are as described above.

$\overline{S_2}$, $\overline{S_1}$, $\overline{S_0}$	26-28	O	**Status:** active during T_4, T_1, and T_2 and is returned to the passive state (1,1,1) during T_3 or during T_W when READY is HIGH. This status is used by the 8288 Bus Controller to generate all memory and I/O access control signals. Any change by $\overline{S_2}$, $\overline{S_1}$, or $\overline{S_0}$ during T_4 is used to indicate the beginning of a bus cycle, and the return to the passive state in T_3 or T_W is used to indicate the end of a bus cycle. These signals float to 3-state OFF in "hold acknowledge." These status lines are encoded as shown.
$\overline{RQ}/\overline{GT_0}$, $\overline{RQ}/\overline{GT_1}$	30, 31	I/O	**Request/Grant:** pins are used by other local bus masters to force the processor to release the local bus at the end of the processor's current bus cycle. Each pin is bidirectional with $\overline{RQ}/\overline{GT_0}$ having higher priority than $\overline{RQ}/\overline{GT_1}$. $\overline{RQ}/\overline{GT}$ has an internal pull-up resistor so may be left unconnected. The request/grant sequence is as follows (see Figure 9): 1. A pulse of 1 CLK wide from another local bus master indicates a local bus request ("hold") to the 8086 (pulse 1). 2. During a T_4 or T_I clock cycle, a pulse 1 CLK wide from the 8086 to the requesting master (pulse 2), indicates that the 8086 has allowed the local bus to float and that it will enter the "hold acknowledge" state at the next CLK. The CPU's bus interface unit is disconnected logically from the local bus during "hold acknowledge." 3. A pulse 1 CLK wide from the requesting master indicates to the 8086 (pulse 3) that the "hold" request is about to end and that the 8086 can reclaim the local bus at the next CLK. Each master-master exchange of the local bus is a sequence of 3 pulses. There must be one dead CLK cycle after each bus exchange. Pulses are active LOW. If the request is made while the CPU is performing a memory cycle, it will release the local bus during T_4 of the cycle when all the following conditions are met: 1. Request occurs on or before T_2. 2. Current cycle is not the low byte of a word (on an odd address). 3. Current cycle is not the first acknowledge of an interrupt acknowledge sequence. 4. A locked instruction is not currently executing.

$\overline{S_2}$	$\overline{S_1}$	$\overline{S_0}$	Characteristics
0 (LOW)	0	0	Interrupt Acknowledge
0	0	1	Read I/O Port
0	1	0	Write I/O Port
0	1	1	Halt
1 (HIGH)	0	0	Code Access
1	0	1	Read Memory
1	1	0	Write Memory
1	1	1	Passive

Table 1. Pin Description (Continued)

Symbol	Pin No.	Type	Name and Function
			If the local bus is idle when the request is made the two possible events will follow: 1. Local bus will be released during the next clock. 2. A memory cycle will start within 3 clocks. Now the four rules for a currently active memory cycle apply with condition number 1 already satisfied.
$\overline{LOCK}$	29	O	**$\overline{LOCK}$:** output indicates that other system bus masters are not to gain control of the system bus while $\overline{LOCK}$ is active LOW. The $\overline{LOCK}$ signal is activated by the "LOCK" prefix instruction and remains active until the completion of the next instruction. This signal is active LOW, and floats to 3-state OFF in "hold acknowledge."
QS_1, QS_0	24, 25	O	**Queue Status:** The queue status is valid during the CLK cycle after which the queue operation is performed. QS_1 and QS_0 provide status to allow external tracking of the internal 8086 instruction queue.

The following pin function descriptions are for the 8086 in minimum mode (i.e., MN/$\overline{MX}$ = V_{CC}). Only the pin functions which are unique to minimum mode are described; all other pin functions are as described above.

M/$\overline{IO}$	28	O	**Status line:** logically equivalent to S_2 in the maximum mode. It is used to distinguish a memory access from an I/O access. M/$\overline{IO}$ becomes valid in the T_4 preceding a bus cycle and remains valid until the final T_4 of the cycle (M = HIGH, IO = LOW). M/$\overline{IO}$ floats to 3-state OFF in local bus "hold acknowledge."
$\overline{WR}$	29	O	**Write:** indicates that the processor is performing a write memory or write I/O cycle, depending on the state of the M/$\overline{IO}$ signal. $\overline{WR}$ is active for T_2, T_3 and T_W of any write cycle. It is active LOW, and floats to 3-state OFF in local bus "hold acknowledge."
$\overline{INTA}$	24	O	**$\overline{INTA}$** is used as a read strobe for interrupt acknowledge cycles. It is active LOW during T_2, T_3 and T_W of each interrupt acknowledge cycle.
ALE	25	O	**Address Latch Enable:** provided by the processor to latch the address into the 8282/8283 address latch. It is a HIGH pulse active during T_1 of any bus cycle. Note that ALE is never floated.
DT/$\overline{R}$	27	O	**Data Transmit/Receive:** needed in minimum system that desires to use an 8286/8287 data bus transceiver. It is used to control the direction of data flow through the transceiver. Logically DT/$\overline{R}$ is equivalent to $\overline{S_1}$ in the maximum mode, and its timing is the same as for M/$\overline{IO}$. (T = HIGH, R = LOW.) This signal floats to 3-state OFF in local bus "hold acknowledge."
$\overline{DEN}$	26	O	**Data Enable:** provided as an output enable for the 8286/8287 in a minimum system which uses the transceiver. $\overline{DEN}$ is active LOW during each memory and I/O access and for INTA cycles. For a read or $\overline{INTA}$ cycle it is active from the middle of T_2 until the middle of T_4, while for a write cycle it is active from the beginning of T_2 until the middle of T_4. $\overline{DEN}$ floats to 3-state OFF in local bus "hold acknowledge."
HOLD, HLDA	31, 30	I/O	**HOLD:** indicates that another master is requesting a local bus "hold." To be acknowledged, HOLD must be active HIGH. The processor receiving the "hold" request will issue HLDA (HIGH) as an acknowledgement in the middle of a T_4 or T_I clock cycle. Simultaneous with the issuance of HLDA the processor will float the local bus and control lines. After HOLD is detected as being LOW, the processor will LOWer HLDA, and when the processor needs to run another cycle, it will again drive the local bus and control lines. The same rules as for $\overline{RQ}$/$\overline{GT}$ apply regarding when the local bus will be released. HOLD is not an asynchronous input. External synchronization should be provided if the system cannot otherwise guarantee the setup time.

FUNCTIONAL DESCRIPTION

GENERAL OPERATION

The internal functions of the iAPX 86/10 processor are partitioned logically into two processing units. The first is the Bus Interface Unit (BIU) and the second is the Execution Unit (EU) as shown in the block diagram of Figure 1.

These units can interact directly but for the most part perform as separate asynchronous operational processors. The bus interface unit provides the functions related to instruction fetching and queuing, operand fetch and store, and address relocation. This unit also provides the basic bus control. The overlap of instruction pre-fetching provided by this unit serves to increase processor performance through improved bus bandwidth utilization. Up to 6 bytes of the instruction stream can be queued while waiting for decoding and execution.

The instruction stream queuing mechanism allows the BIU to keep the memory utilized very efficiently. Whenever there is space for at least 2 bytes in the queue, the BIU will attempt a word fetch memory cycle. This greatly reduces "dead time" on the memory bus. The queue acts as a First-In-First-Out (FIFO) buffer, from which the EU extracts instruction bytes as required. If the queue is empty (following a branch instruction, for example), the first byte into the queue immediately becomes available to the EU.

The execution unit receives pre-fetched instructions from the BIU queue and provides un-relocated operand addresses to the BIU. Memory operands are passed through the BIU for processing by the EU, which passes results to the BIU for storage. See the Instruction Set description for further register set and architectural descriptions.

MEMORY ORGANIZATION

The processor provides a 20-bit address to memory which locates the byte being referenced. The memory is organized as a linear array of up to 1 million bytes, addressed as 00000(H) to FFFFF(H). The memory is logically divided into code, data, extra data, and stack segments of up to 64K bytes each, with each segment falling on 16-byte boundaries. (See Figure 3a.)

All memory references are made relative to base addresses contained in high speed segment registers. The segment types were chosen based on the addressing needs of programs. The segment register to be selected is automatically chosen according to the rules of the following table. All information in one segment type share the same logical attributes (e.g. code or data). By structuring memory into relocatable areas of similar characteristics and by automatically selecting segment registers, programs are shorter, faster, and more structured.

Word (16-bit) operands can be located on even or odd address boundaries and are thus not constrained to even boundaries as is the case in many 16-bit computers. For address and data operands, the least significant byte of the word is stored in the lower valued address location and the most significant byte in the next higher address location. The BIU automatically performs the proper number of memory accesses, one if the word operand is on an even byte boundary and two if it is on an odd byte boundary. Except for the performance penalty, this double access is transparent to the software. This performance penalty does not occur for instruction fetches, only word operands.

Physically, the memory is organized as a high bank (D_{15}-D_8) and a low bank (D_7-D_0) of 512K 8-bit bytes addressed in parallel by the processor's address lines

A_{19} - A_1. Byte data with even addresses is transferred on the D_7-D_0 bus lines while odd addressed byte data (A_0 HIGH) is transferred on the D_{15}-D_8 bus lines. The processor provides two enable signals, $\overline{BHE}$ and A_0, to selectively allow reading from or writing into either an odd byte location, even byte location, or both. The instruction stream is fetched from memory as words and is addressed internally by the processor to the byte level as necessary.

Memory Reference Need	Segment Register Used	Segment Selection Rule
Instructions	CODE (CS)	Automatic with all instruction prefetch.
Stack	STACK (SS)	All stack pushes and pops. Memory references relative to BP base register except data references.
Local Data	DATA (DS)	Data references when: relative to stack, destination of string operation, or explicitly overridden.
External (Global) Data	EXTRA (ES)	Destination of string operations: Explicitly selected using a segment override.

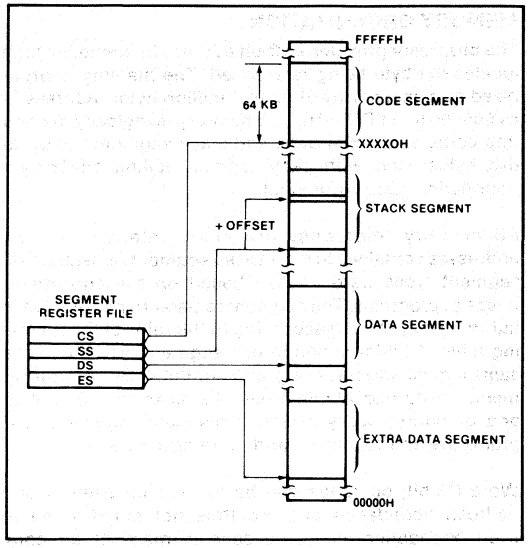

Figure 3a. Memory Organization

In referencing word data the BIU requires one or two memory cycles depending on whether or not the starting byte of the word is on an even or odd address, respectively. Consequently, in referencing word operands performance can be optimized by locating data on even address boundaries. This is an especially useful technique for using the stack, since odd address references to the stack may adversely affect the context switching time for interrupt processing or task multiplexing.

Certain locations in memory are reserved for specific CPU operations (see Figure 3b.) Locations from address FFFF0H through FFFFFH are reserved for operations including a jump to the initial program loading routine. Following RESET, the CPU will always begin execution at location FFFF0H where the jump must be. Locations 00000H through 003FFH are reserved for interrupt operations. Each of the 256 possible interrupt types has its service routine pointed to by a 4-byte pointer element consisting of a 16-bit segment address and a 16-bit offset address. The pointer elements are assumed to have been stored at the respective places in reserved memory prior to occurrence of interrupts.

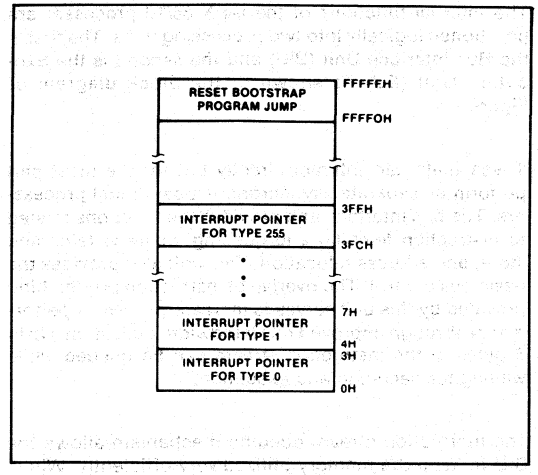

Figure 3b. Reserved Memory Locations

MINIMUM AND MAXIMUM MODES

The requirements for supporting minimum and maximum iAPX 86/10 systems are sufficiently different that they cannot be done efficiently with 40 uniquely defined pins. Consequently, the 8086 is equipped with a strap pin (MN/$\overline{MX}$) which defines the system configuration. The definition of a certain subset of the pins changes dependent on the condition of the strap pin. When MN/$\overline{MX}$ pin is strapped to GND, the 8086 treats pins 24 through 31 in maximum mode. An 8288 bus controller interprets status information coded into $\overline{S}_0$,$\overline{S}_1$,$\overline{S}_2$ to generate bus timing and control signals compatible with the MULTIBUS™ architecture. When the MN/$\overline{MX}$ pin is strapped to V_{CC}, the 8086 generates bus control signals itself on pins 24 through 31, as shown in parentheses in Figure 2. Examples of minimum mode and maximum mode systems are shown in Figure 4.

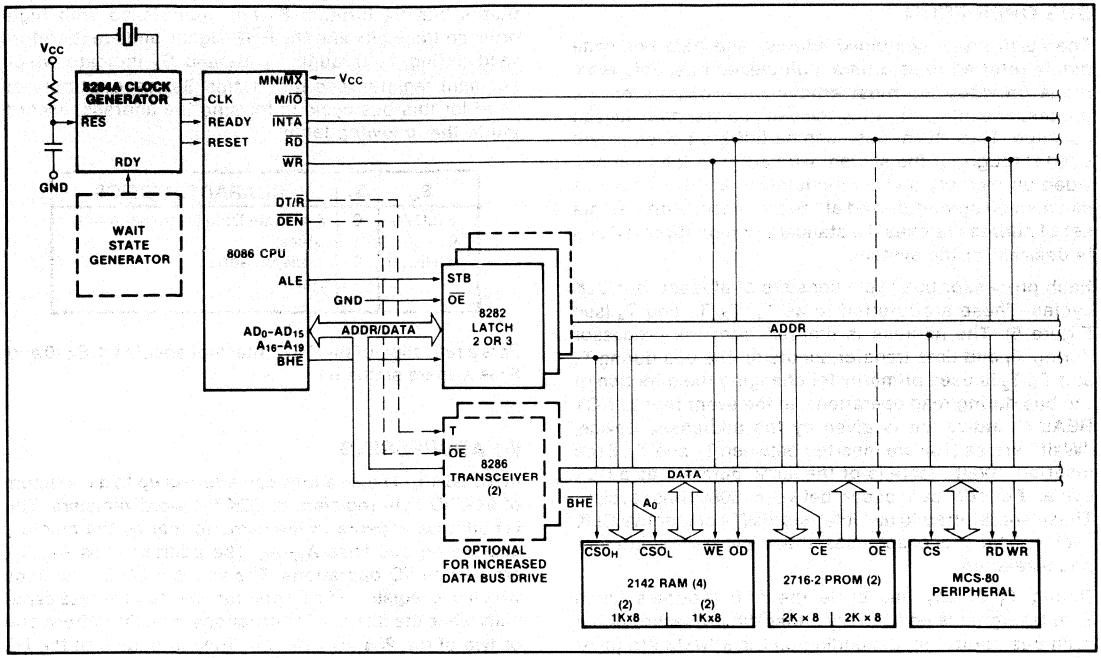

Figure 4a. Minimum Mode iAPX 86/10 Typical Configuration

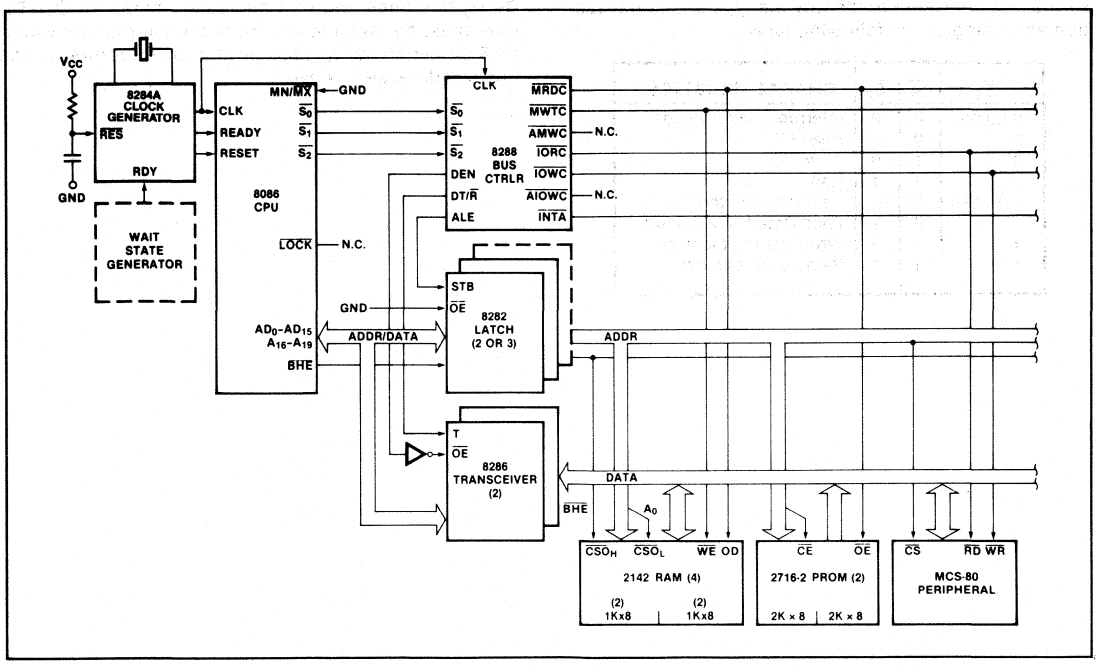

Figure 4b. Maximum Mode iAPX 86/10 Typical Configuration

BUS OPERATION

The 86/10 has a combined address and data bus commonly referred to as a time multiplexed bus. This technique provides the most efficient use of pins on the processor while permitting the use of a standard 40-lead package. This "local bus" can be buffered directly and used throughout the system with address latching provided on memory and I/O modules. In addition, the bus can also be demultiplexed at the processor with a single set of address latches if a standard non-multiplexed bus is desired for the system.

Each processor bus cycle consists of at least four CLK cycles. These are referred to as T_1, T_2, T_3 and T_4 (see Figure 5). The address is emitted from the processor during T_1 and data transfer occurs on the bus during T_3 and T_4. T_2 is used primarily for changing the direction of the bus during read operations. In the event that a "NOT READY" indication is given by the addressed device, "Wait" states (T_W) are inserted between T_3 and T_4. Each inserted "Wait" state is of the same duration as a CLK cycle. Periods can occur between 8086 bus cycles. These are referred to as "Idle" states (T_I) or inactive CLK cycles. The processor uses these cycles for internal housekeeping.

During T_1 of any bus cycle the ALE (Address Latch Enable) signal is emitted (by either the processor or the 8288 bus controller, depending on the MN/$\overline{MX}$ strap). At the trailing edge of this pulse, a valid address and certain status information for the cycle may be latched.

Status bits $\overline{S_0}$, $\overline{S_1}$, and $\overline{S_2}$ are used, in maximum mode, by the bus controller to identify the type of bus transaction according to the following table:

$\overline{S_2}$	$\overline{S_1}$	$\overline{S_0}$	CHARACTERISTICS
0 (LOW)	0	0	Interrupt Acknowledge
0	0	1	Read I/O
0	1	0	Write I/O
0	1	1	Halt
1 (HIGH)	0	0	Instruction Fetch
1	0	1	Read Data from Memory
1	1	0	Write Data to Memory
1	1	1	Passive (no bus cycle)

Status bits S_3 through S_7 are multiplexed with high-order address bits and the $\overline{BHE}$ signal, and are therefore valid during T_2 through T_4. S_3 and S_4 indicate which segment register (see Instruction Set description) was used for this bus cycle in forming the address, according to the following table:

S_4	S_3	CHARACTERISTICS
0 (LOW)	0	Alternate Data (extra segment)
0	1	Stack
1 (HIGH)	0	Code or None
1	1	Data

S_5 is a reflection of the PSW interrupt enable bit. S_6=0 and S_7 is a spare status bit.

I/O ADDRESSING

In the 86/10, I/O operations can address up to a maximum of 64K I/O byte registers or 32K I/O word registers. The I/O address appears in the same format as the memory address on bus lines A_{15}-A_0. The address lines A_{19}-A_{16} are zero in I/O operations. The variable I/O instructions which use register DX as a pointer have full address capability while the direct I/O instructions directly address one or two of the 256 I/O byte locations in page 0 of the I/O address space.

I/O ports are addressed in the same manner as memory locations. Even addressed bytes are transferred on the D_7-D_0 bus lines and odd addressed bytes on D_{15}-D_8. Care must be taken to assure that each register within an 8-bit peripheral located on the lower portion of the bus be addressed as even.

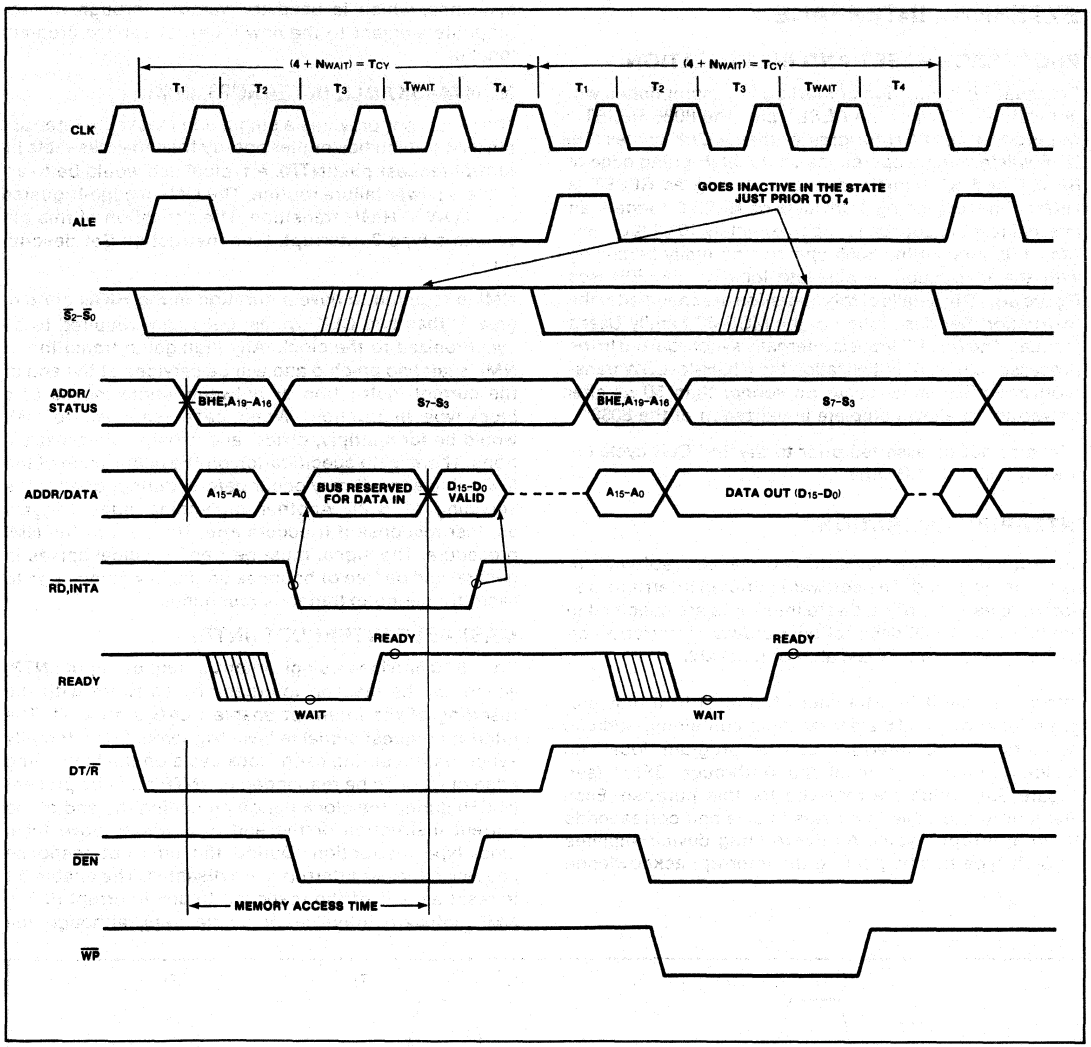

Figure 5. Basic System Timing

EXTERNAL INTERFACE

PROCESSOR RESET AND INITIALIZATION

Processor initialization or start up is accomplished with activation (HIGH) of the RESET pin. The 8086 RESET is required to be HIGH for greater than 4 CLK cycles. The 8086 will terminate operations on the high-going edge of RESET and will remain dormant as long as RESET is HIGH. The low-going transition of RESET triggers an internal reset sequence for approximately 10 CLK cycles. After this interval the 8086 operates normally beginning with the instruction in absolute location FFFF0H (see Figure 3B). The details of this operation are specified in the Instruction Set description of the MCS-86 Family User's Manual. The RESET input is internally synchronized to the processor clock. At initialization the HIGH-to-LOW transition of RESET must occur no sooner than 50 μs after power-up, to allow complete initialization of the 8086.

NMI may not be asserted prior to the 2nd CLK cycle following the end of RESET.

INTERRUPT OPERATIONS

Interrupt operations fall into two classes; software or hardware initiated. The software initiated interrupts and software aspects of hardware interrupts are specified in the Instruction Set description. Hardware interrupts can be classified as non-maskable or maskable.

Interrupts result in a transfer of control to a new program location. A 256-element table containing address pointers to the interrupt service program locations resides in absolute locations 0 through 3FFH (see Figure 3b), which are reserved for this purpose. Each element in the table is 4 bytes in size and corresponds to an interrupt "type". An interrupting device supplies an 8-bit type number, during the interrupt acknowledge sequence, which is used to "vector" through the appropriate element to the new interrupt service program location.

NON-MASKABLE INTERRUPT (NMI)

The processor provides a single non-maskable interrupt pin (NMI) which has higher priority than the maskable interrupt request pin (INTR). A typical use would be to activate a power failure routine. The NMI is edge-triggered on a LOW-to-HIGH transition. The activation of this pin causes a type 2 interrupt. (See Instruction Set description.)

NMI is required to have a duration in the HIGH state of greater than two CLK cycles, but is not required to be synchronized to the clock. Any high-going transition of NMI is latched on-chip and will be serviced at the end of the current instruction or between whole moves of a block-type instruction. Worst case response to NMI would be for multiply, divide, and variable shift instructions. There is no specification on the occurrence of the low-going edge; it may occur before, during, or after the servicing of NMI. Another high-going edge triggers another response if it occurs after the start of the NMI procedure. The signal must be free of logical spikes in general and be free of bounces on the low-going edge to avoid triggering extraneous responses.

MASKABLE INTERRUPT (INTR)

The 86/10 provides a single interrupt request input (INTR) which can be masked internally by software with the resetting of the interrupt enable FLAG status bit. The interrupt request signal is level triggered. It is internally synchronized during each clock cycle on the high-going edge of CLK. To be responded to, INTR must be present (HIGH) during the clock period preceding the end of the current instruction or the end of a whole move for a block-type instruction. During the interrupt response sequence further interrupts are disabled. The enable bit is reset as part of the response to any interrupt (INTR, NMI, software interrupt or single-step), although the

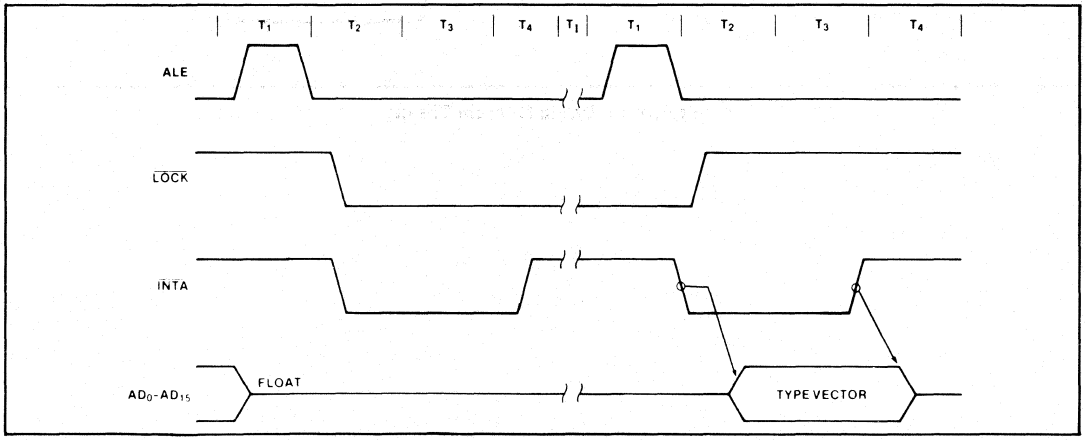

Figure 6. Interrupt Acknowledge Sequence

FLAGS register which is automatically pushed onto the stack reflects the state of the processor prior to the interrupt. Until the old FLAGS register is restored the enable bit will be zero unless specifically set by an instruction.

During the response sequence (figure 6) the processor executes two successive (back-to-back) interrupt acknowledge cycles. The 8086 emits the LOCK signal from T_2 of the first bus cycle until T_2 of the second. A local bus "hold" request will not be honored until the end of the second bus cycle. In the second bus cycle a byte is fetched from the external interrupt system (e.g., 8259A PIC) which identifies the source (type) of the interrupt. This byte is multiplied by four and used as a pointer into the interrupt vector lookup table. An INTR signal left HIGH will be continually responded to within the limitations of the enable bit and sample period. The INTERRUPT RETURN instruction includes a FLAGS pop which returns the status of the original interrupt enable bit when it restores the FLAGS.

HALT

When a software "HALT" instruction is executed the processor indicates that it is entering the "HALT" state in one of two ways depending upon which mode is strapped. In minimum mode, the processor issues one ALE with no qualifying bus control signals. In Maximum Mode, the processor issues appropriate HALT status on $\overline{S}_2\overline{S}_1\overline{S}_0$ and the 8288 bus controller issues one ALE. The 8086 will not leave the "HALT" state when a local bus "hold" is entered while in "HALT". In this case, the processor reissues the HALT indicator. An interrupt request or RESET will force the 8086 out of the "HALT" state.

READ/MODIFY/WRITE (SEMAPHORE) OPERATIONS VIA LOCK

The $\overline{LOCK}$ status information is provided by the processor when directly consecutive bus cycles are required during the execution of an instruction. This provides the processor with the capability of performing read/modify/write operations on memory (via the Exchange Register With Memory instruction, for example) without the possibility of another system bus master receiving intervening memory cycles. This is useful in multiprocessor system configurations to accomplish "test and set lock" operations. The $\overline{LOCK}$ signal is activated (forced LOW) in the clock cycle following the one in which the software "LOCK" prefix instruction is decoded by the EU. It is deactivated at the end of the last bus cycle of the instruction following the "LOCK" prefix instruction. While $\overline{LOCK}$ is active a request on a RQ/GT pin will be recorded and then honored at the end of the LOCK.

EXTERNAL SYNCHRONIZATION VIA TEST

As an alternative to the interrupts and general I/O capabilities, the 8086 provides a single software-testable input known as the $\overline{TEST}$ signal. At any time the program may execute a WAIT instruction. If at that time the $\overline{TEST}$ signal is inactive (HIGH), program execution becomes suspended while the processor waits for $\overline{TEST}$ to become active. It must remain active for at least 5 CLK cycles. The WAIT instruction is re-executed repeatedly until that time. This activity does not consume bus cycles. The processor remains in an idle state while waiting. All 8086 drivers go to 3-state OFF if bus "Hold"is entered. If interrupts are enabled, they may occur while the processor is waiting. When this occurs the processor fetches the WAIT instruction one extra time, processes the interrupt, and then re-fetches and re-executes the WAIT instruction upon returning from the interrupt.

BASIC SYSTEM TIMING

Typical system configurations for the processor operating in minimum mode and in maximum mode are shown in Figures 4a and 4b, respectively. In minimum mode, the MN/$\overline{MX}$ pin is strapped to V_{CC} and the processor emits bus control signals in a manner similar to the 8085. In maximum mode, the MN/$\overline{MX}$ pin is strapped to V_{SS} and the processor emits coded status information which the 8288 bus controller uses to generate MULTIBUS compatible bus control signals. Figure 5 illustrates the signal timing relationships.

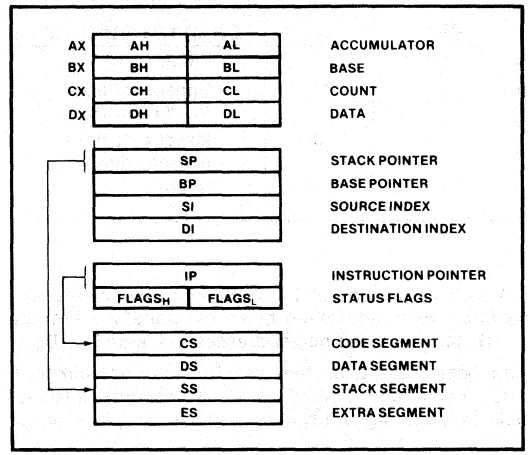

Figure 7. iAPX 86/10 Register Model

SYSTEM TIMING — MINIMUM SYSTEM

The read cycle begins in T_1 with the assertion of the Address Latch Enable (ALE) signal. The trailing (low-going) edge of this signal is used to latch the address information, which is valid on the local bus at this time, into the 8282/8283 latch. The $\overline{BHE}$ and A_0 signals address the low, high, or both bytes. From T_1 to T_4 the M/$\overline{IO}$ signal indicates a memory or I/O operation. At T_2 the address is removed from the local bus and the bus goes to a high impedance state. The read control signal is also asserted at T_2. The read ($\overline{RD}$) signal causes the addressed device to enable its data bus drivers to the local bus. Some time later valid data will be available on the bus and the addressed device will drive the READY line HIGH. When the processor returns the read signal

to a HIGH level, the addressed device will again 3-state its bus drivers. If a transceiver (8286/8287) is required to buffer the 8086 local bus, signals DT/$\overline{R}$ and $\overline{DEN}$ are provided by the 8086.

A write cycle also begins with the assertion of ALE and the emission of the address. The M/$\overline{IO}$ signal is again asserted to indicate a memory or I/O write operation. In the T_2 immediately following the address emission the processor emits the data to be written into the addressed location. This data remains valid until the middle of T_4. During T_2, T_3, and T_W the processor asserts the write control signal. The write ($\overline{WR}$) signal becomes active at the beginning of T_2 as opposed to the read which is delayed somewhat into T_2 to provide time for the bus to float.

The $\overline{BHE}$ and A_0 signals are used to select the proper byte(s) of the memory/IO word to be read or written according to the following table:

$\overline{BHE}$	A0	CHARACTERISTICS
0	0	Whole word
0	1	Upper byte from/ to odd address
1	0	Lower byte from/ to even address
1	1	None

I/O ports are addressed in the same manner as memory location. Even addressed bytes are transferred on the D_7-D_0 bus lines and odd addressed bytes on D_{15}-D_8.

The basic difference between the interrupt acknowledge cycle and a read cycle is that the interrupt acknowledge signal ($\overline{INTA}$) is asserted in place of the read ($\overline{RD}$) signal and the address bus is floated. (See Figure 6.) In the second of two successive INTA cycles, a byte of information is read from bus lines D_7-D_0 as supplied by the interrupt system logic (i.e., 8259A Priority Interrupt Controller). This byte identifies the source (type) of the interrupt. It is multiplied by four and used as a pointer into an interrupt vector lookup table, as described earlier.

BUS TIMING—MEDIUM SIZE SYSTEMS

For medium size systems the MN/$\overline{MX}$ pin is connected to V_{SS} and the 8288 Bus Controller is added to the system as well as an 8282/8283 latch for latching the system address, and a 8286/8287 transceiver to allow for bus loading greater than the 8086 is capable of handling. Signals ALE, DEN, and DT/$\overline{R}$ are generated by the 8288 instead of the processor in this configuration although their timing remains relatively the same. The 8086 status outputs ($\overline{S_2}$, $\overline{S_1}$, and $\overline{S_0}$) provide type-of-cycle information and become 8288 inputs. This bus cycle information specifies read (code, data, or I/O), write (data or I/O), interrupt acknowledge, or software halt. The 8288 thus issues control signals specifying memory read or write, I/O read or write, or interrupt acknowledge. The 8288 provides two types of write strobes, normal and advanced, to be applied as required. The normal write strobes have data valid at the leading edge of write. The advanced write strobes have the same timing as read strobes, and hence data isn't valid at the leading edge of write. The 8286/8287 transceiver receives the usual T and OE inputs from the 8288's DT/$\overline{R}$ and DEN.

The pointer into the interrupt vector table, which is passed during the second INTA cycle, can derive from an 8259A located on either the local bus or the system bus. If the master 8259A Priority Interrupt Controller is positioned on the local bus, a TTL gate is required to disable the 8286/8287 transceiver when reading from the master 8259A during the interrupt acknowledge sequence and software "poll".

ABSOLUTE MAXIMUM RATINGS*

Ambient Temperature Under Bias . . . . . 0°C to 70°C
Storage Temperature . . . . . – 65°C to + 150°C
Voltage on Any Pin with
Respect to Ground . . . . . – 1.0 to + 7V
Power Dissipation . . . . . 2.5 Watt

**NOTICE: Stresses above those listed under "Absolute Maximum Ratings" may cause permanent damage to the device. This is a stress rating only and functional operation of the device at these or any other conditions above those indicated in the operational sections of this specification is not implied. Exposure to absolute maximum rating conditions for extended periods may affect device reliability.*

D.C. CHARACTERISTICS

(8086: T_A = 0°C to 70°C, V_{CC} = 5V ± 10%)
(8086-1: T_A = 0°C to 70°C, V_{CC} = 5V ± 5%)
(8086-2: T_A = 0°C to 70°C, V_{CC} = 5V ± 5%)

Symbol	Parameter	Min.	Max.	Units	Test Conditions
V_{IL}	Input Low Voltage	– 0.5	+ 0.8	V	
V_{IH}	Input High Voltage	2.0	V_{CC} + 0.5	V	
V_{OL}	Output Low Voltage		0.45	V	I_{OL}=2.5 mA
V_{OH}	Output High Voltage	2.4		V	I_{OH} = – 400 μA
I_{CC}	Power Supply Current: 8086 8086-1 8086-2		340 360 350	mA	T_A = 25°C
I_{LI}	Input Leakage Current		± 10	μA	0V ≤ V_{IN} ≤ V_{CC}
I_{LO}	Output Leakage Current		± 10	μA	0.45V ≤ V_{OUT} ≤ V_{CC}
V_{CL}	Clock Input Low Voltage	– 0.5	+ 0.6	V	
V_{CH}	Clock Input High Voltage	3.9	V_{CC} + 1.0	V	
C_{IN}	Capacitance of Input Buffer (All input except $AD_0 - AD_{15}$, $\overline{RQ}/\overline{GT}$)		15	pF	fc = 1 MHz
C_{IO}	Capacitance of I/O Buffer ($AD_0 - AD_{15}$, $\overline{RQ}/\overline{GT}$)		15	pF	fc = 1 MHz

A.C. CHARACTERISTICS

(8086: T_A = 0°C to 70°C, V_{CC} = 5V ± 10%)
(8086-1: T_A = 0°C to 70°C, V_{CC} = 5V ± 5%)
(8086-2: T_A = 0°C to 70°C, V_{CC} = 5V ± 5%)

MINIMUM COMPLEXITY SYSTEM TIMING REQUIREMENTS

Symbol	Parameter	8086		8086-1 (Preliminary)		8086-2		Units	Test Conditions
		Min.	Max.	Min.	Max.	Min.	Max.		
TCLCL	CLK Cycle Period	200	500	100	500	125	500	ns	
TCLCH	CLK Low Time	118		53		68		ns	
TCHCL	CLK High Time	69		39		44		ns	
TCH1CH2	CLK Rise Time		10		10		10	ns	From 1.0V to 3.5V
TCL2CL1	CLK Fall Time		10		10		10	ns	From 3.5V to 1.0V
TDVCL	Data in Setup Time	30		5		20		ns	
TCLDX	Data in Hold Time	10		10		10		ns	
TR1VCL	RDY Setup Time into 8284A (See Notes 1, 2)	35		35		35		ns	
TCLR1X	RDY Hold Time into 8284A (See Notes 1, 2)	0		0		0		ns	
TRYHCH	READY Setup Time into 8086	118		53		68		ns	
TCHRYX	READY Hold Time into 8086	30		20		20		ns	
TRYLCL	READY Inactive to CLK (See Note 3)	−8		−10		−8		ns	
THVCH	HOLD Setup Time	35		20		20		ns	
TINVCH	INTR, NMI, $\overline{\text{TEST}}$ Setup Time (See Note 2)	30		15		15		ns	
TILIH	Input Rise Time (Except CLK)		20		20		20	ns	From 0.8V to 2.0V
TIHIL	Input Fall Time (Except CLK)		12		12		12	ns	From 2.0V to 0.8V

A.C. CHARACTERISTICS (Continued)

TIMING RESPONSES

Symbol	Parameter	8086		8086-1 (Preliminary)		8086-2		Units	Test Conditions
		Min.	Max.	Min.	Max.	Min.	Max.		
TCLAV	Address Valid Delay	10	110	10	50	10	60	ns	
TCLAX	Address Hold Time	10		10		10		ns	
TCLAZ	Address Float Delay	TCLAX	80	10	40	TCLAX	50	ns	
TLHLL	ALE Width	TCLCH−20		TCLCH−10		TCLCH-10		ns	
TCLLH	ALE Active Delay		80		40		50	ns	
TCHLL	ALE Inactive Delay		85		45		55	ns	
TLLAX	Address Hold Time to ALE Inactive	TCHCL−10		TCHCL−10		TCHCL−10		ns	
TCLDV	Data Valid Delay	10	110	10	50	10	60	ns	*C_L = 20-100 pF for all 8086 Outputs (In addition to 8086 self-load)
TCHDX	Data Hold Time	10		10		10		ns	
TWHDX	Data Hold Time After WR	TCLCH−30		TCLCH−25		TCLCH−30		ns	
TCVCTV	Control Active Delay 1	10	110	10	50	10	70	ns	
TCHCTV	Control Active Delay 2	10	110	10	45	10	60	ns	
TCVCTX	Control Inactive Delay	10	110	10	50	10	70	ns	
TAZRL	Address Float to READ Active	0		0		0		ns	
TCLRL	$\overline{RD}$ Active Delay	10	165	10	70	10	100	ns	
TCLRH	$\overline{RD}$ Inactive Delay	10	150	10	60	10	80	ns	
TRHAV	$\overline{RD}$ Inactive to Next Address Active	TCLCL−45		TCLCL−35		TCLCL−40		ns	
TCLHAV	HLDA Valid Delay	10	160	10	60	10	100	ns	
TRLRH	$\overline{RD}$ Width	2TCLCL−75		2TCLCL−40		2TCLCL−50		ns	
TWLWH	$\overline{WR}$ Width	2TCLCL−60		2TCLCL−35		2TCLCL−40		ns	
TAVAL	Address Valid to ALE Low	TCLCH−60		TCLCH−35		TCLCH−40		ns	
TOLOH	Output Rise Time		20		20		20	ns	From 0.8V to 2.0V
TOHOL	Output Fall Time		12		12		12	ns	From 2.0V to 0.8V

NOTES:
1. Signal at 8284A shown for reference only.
2. Setup requirement for asynchronous signal only to guarantee recognition at next CLK.
3. Applies only to T2 state. (8 ns into T3).

A.C. TESTING INPUT, OUTPUT WAVEFORM

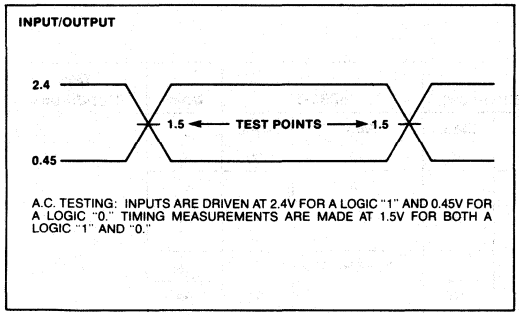

A.C. TESTING LOAD CIRCUIT

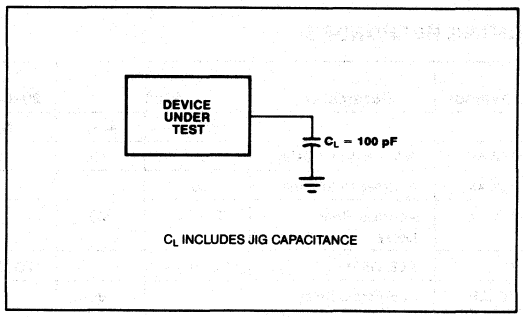

WAVEFORMS

MINIMUM MODE

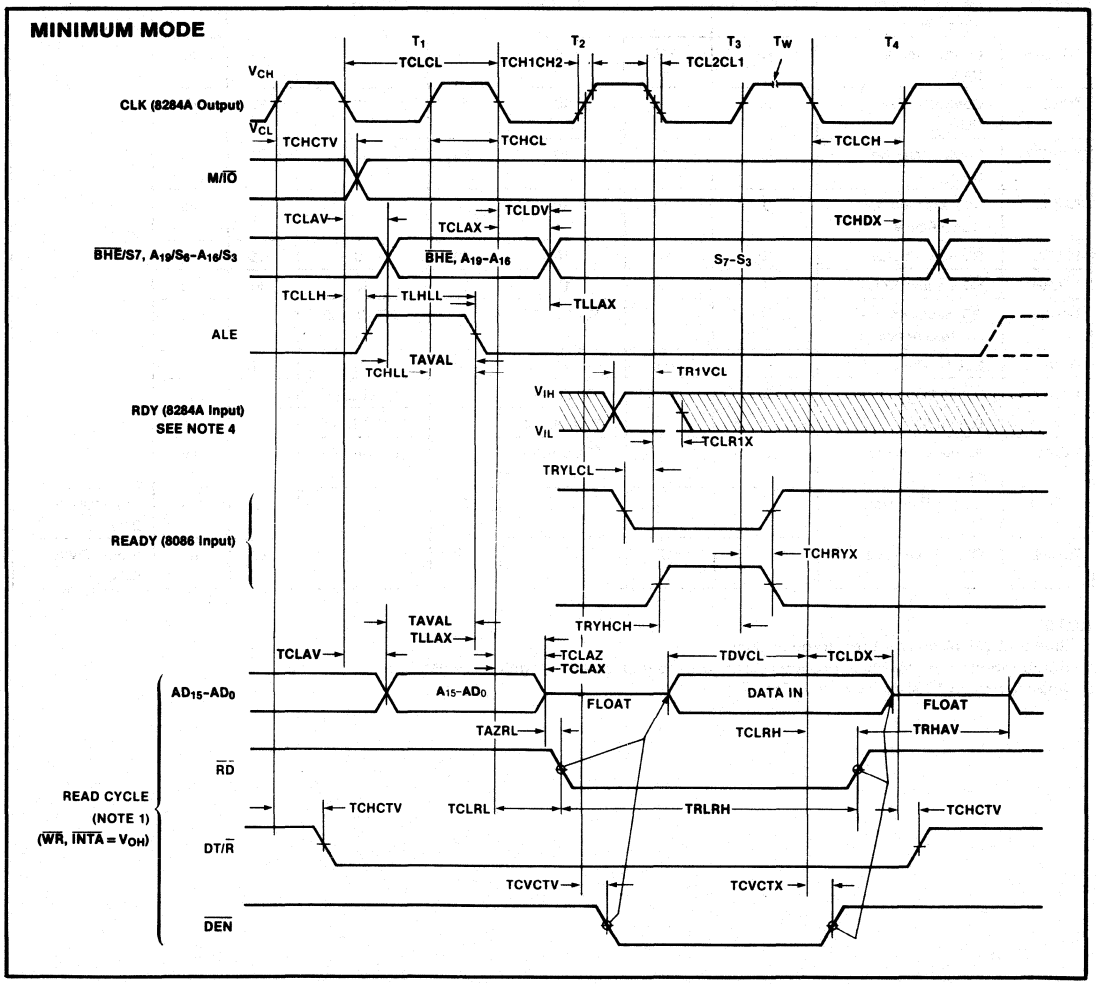

WAVEFORMS (Continued)

MINIMUM MODE (Continued)

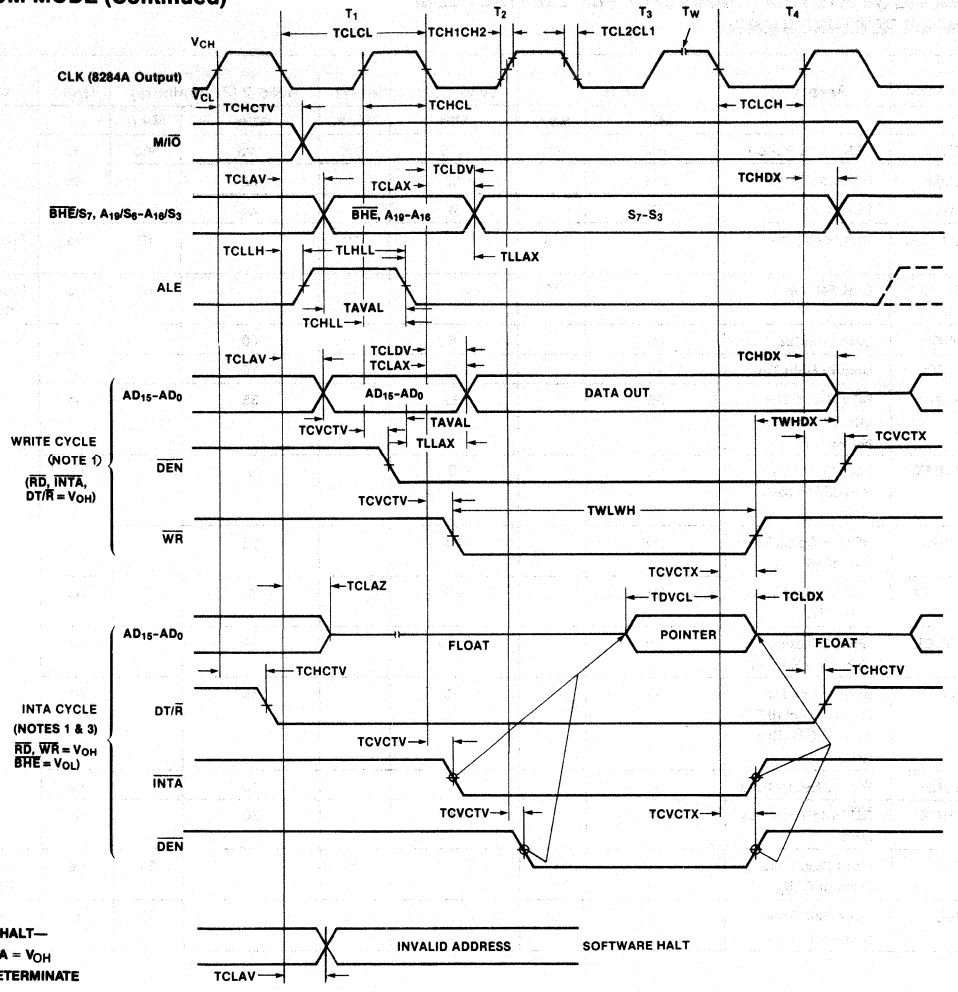

NOTES:

1. All signals switch between V_{OH} and V_{OL} unless otherwise specified.
2. RDY is sampled near the end of T_2, T_3, T_W to determine if T_W machines states are to be inserted.
3. Two INTA cycles run back-to-back. The 8086 LOCAL ADDR/DATA BUS is floating during both INTA cycles. Control signals shown for second INTA cycle.
4. Signals at 8284A are shown for reference only.
5. All timing measurements are made at 1.5V unless otherwise noted.

A.C. CHARACTERISTICS

MAX MODE SYSTEM (USING 8288 BUS CONTROLLER) TIMING REQUIREMENTS

Symbol	Parameter	8086		8086-1 (Preliminary)		8086-2 (Preliminary)		Units	Test Conditions
		Min.	Max.	Min.	Max.	Min.	Max.		
TCLCL	CLK Cycle Period	200	500	100	500	125	500	ns	
TCLCH	CLK Low Time	118		53		68		ns	
TCHCL	CLK High Time	69		39		44		ns	
TCH1CH2	CLK Rise Time		10		10		10	ns	From 1.0V to 3.5V
TCL2CL1	CLK Fall Time		10		10		10	ns	From 3.5V to 1.0V
TDVCL	Data in Setup Time	30		5		20		ns	
TCLDX	Data In Hold Time	10		10		10		ns	
TR1VCL	RDY Setup Time into 8284A (See Notes 1, 2)	35		35		35		ns	
TCLR1X	RDY Hold Time into 8284A (See Notes 1, 2)	0		0		0		ns	
TRYHCH	READY Setup Time into 8086	118		53		68		ns	
TCHRYX	READY Hold Time into 8086	30		20		20		ns	
TRYLCL	READY Inactive to CLK (See Note 4)	−8		−10		−8		ns	
TINVCH	Setup Time for Recognition (INTR, NMI, $\overline{TEST}$) (See Note 2)	30		15		15		ns	
TGVCH	$\overline{RQ}/\overline{GT}$ Setup Time	30		12		15		ns	
TCHGX	$\overline{RQ}$ Hold Time into 8086	40		20		30		ns	
TILIH	Input Rise Time (Except CLK)		20		20		20	ns	From 0.8V to 2.0V
TIHIL	Input Fall Time (Except CLK)		12		12		12	ns	From 2.0V to 0.8V

NOTES:
1. Signal at 8284A or 8288 shown for reference only.
2. Setup requirement for asynchronous signal only to guarantee recognition at next CLK.
3. Applies only to T3 and wait states.
4. Applies only to T2 state (8 ns into T3).

A.C. CHARACTERISTICS (Continued)

TIMING RESPONSES

Symbol	Parameter	8086		8086-1 (Preliminary)		8086-2 (Preliminary)		Units	Test Conditions
		Min.	Max.	Min.	Max.	Min.	Max.		
TCLML	Command Active Delay (See Note 1)	10	35	10	35	10	35	ns	C_L = 20-100 pF for all 8086 Outputs (In addition to 8086 self-load)
TCLMH	Command Inactive Delay (See Note 1)	10	35	10	35	10	35	ns	
TRYHSH	READY Active to Status Passive (See Note 3)		110		45		65	ns	
TCHSV	Status Active Delay	10	110	10	45	10	60	ns	
TCLSH	Status Inactive Delay	10	130	10	55	10	70	ns	
TCLAV	Address Valid Delay	10	110	10	50	10	60	ns	
TCLAX	Address Hold Time	10		10		10		ns	
TCLAZ	Address Float Delay	TCLAX	80	10	40	TCLAX	50	ns	
TSVLH	Status Valid to ALE High (See Note 1)		15		15		15	ns	
TSVMCH	Status Valid to MCE High (See Note 1)		15		15		15	ns	
TCLLH	CLK Low to ALE Valid (See Note 1)		15		15		15	ns	
TCLMCH	CLK Low to MCE High (See Note 1)		15		15		15	ns	
TCHLL	ALE Inactive Delay (See Note 1)		15		15		15	ns	
TCLMCL	MCE Inactive Delay (See Note 1)		15		15		15	ns	
TCLDV	Data Valid Delay	10	110	10	50	10	60	ns	
TCHDX	Data Hold Time	10		10		10		ns	
TCVNV	Control Active Delay (See Note 1)	5	45	5	45	5	45	ns	
TCVNX	Control Inactive Delay (See Note 1)	10	45	10	45	10	45	ns	
TAZRL	Address Float to Read Active	0		0		0		ns	
TCLRL	RD Active Delay	10	165	10	70	10	100	ns	
TCLRH	RD Inactive Delay	10	150	10	60	10	80	ns	
TRHAV	RD Inactive to Next Address Active	TCLCL−45		TCLCL−35		TCLCL−40		ns	
TCHDTL	Direction Control Active Delay (See Note 1)		50		50		50	ns	
TCHDTH	Direction Control Inactive Delay (See Note 1)		30		30		30	ns	
TCLGL	GT Active Delay	0	85	0	45	0	50	ns	
TCLGH	GT Inactive Delay	0	85	0	45	0	50	ns	
TRLRH	RD Width	2TCLCL−75		2TCLCL−40		2TCLCL−50		ns	
TOLOH	Output Rise Time		20		20		20	ns	From 0.8V to 2.0V
TOHOL	Output Fall Time		12		12		12	ns	From 2.0V to 0.8V

WAVEFORMS

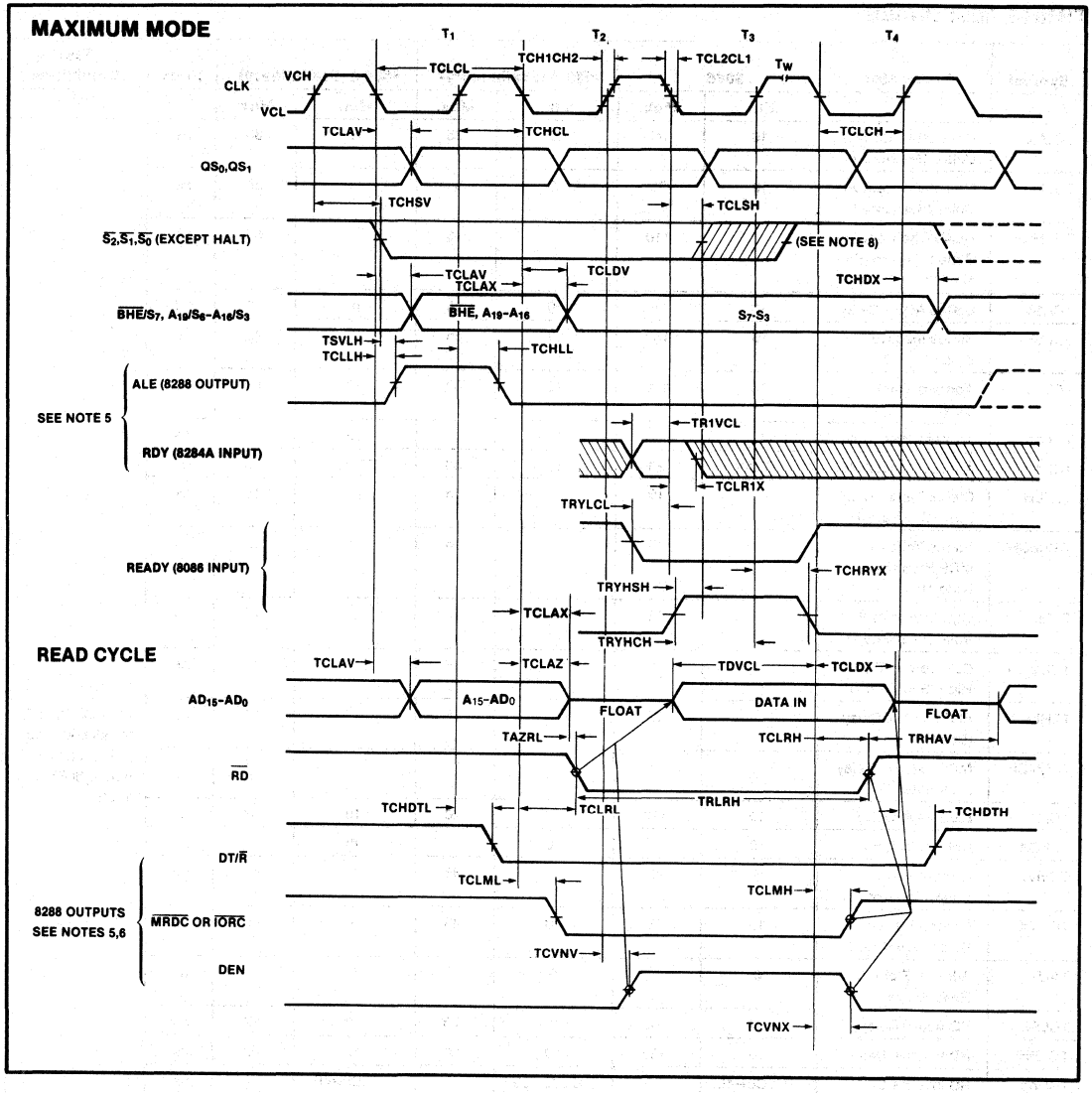
MAXIMUM MODE
T1
T2
T3
T4
CLK
VCH
VCL
TCLCL
TCH1CH2
TCL2CL1
TW
TCLAV
TCHCL
TCLCH
QS0,QS1
TCHSV
TCLSH
S2,S1,S0 (EXCEPT HALT)
(SEE NOTE 8)
TCLAV
TCLAX
TCLDV
TCHDX
BHE/S7, A19/S6-A16/S3
BHE, A19-A16
S7-S3
TSVLH
TCLLH
TCHLL
SEE NOTE 5
ALE (8288 OUTPUT)
RDY (8284A INPUT)
TR1VCL
TCLR1X
TRYLCL
READY (8086 INPUT)
TCHRYX
TRYHSH
TCLAX
TRYHCH
READ CYCLE
TCLAV
TCLAZ
TDVCL
TCLDX
AD15-AD0
A15-AD0
FLOAT
DATA IN
FLOAT
TAZRL
TCLRH
TRHAV
RD
TRLRH
TCHDTL
TCLRL
TCHDTH
DT/R
TCLML
TCLMH
8288 OUTPUTS
SEE NOTES 5,6
MRDC OR IORC
TCVNV
DEN
TCVNX

WAVEFORMS (Continued)

MAXIMUM MODE (Continued)

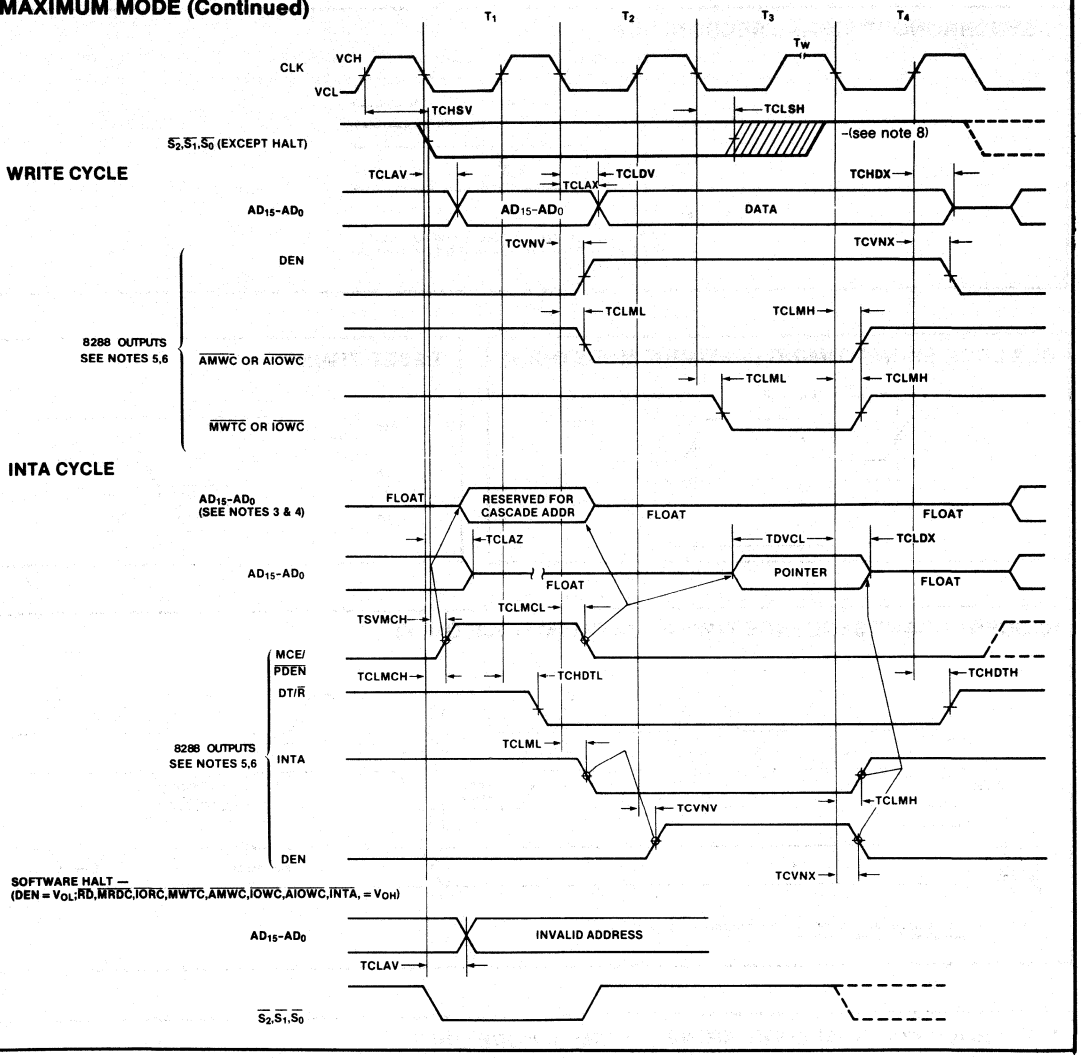

NOTES:

1. All signals switch between V_{OH} and V_{OL} unless otherwise specified.
2. RDY is sampled near the end of T_2, T_3, T_W to determine if T_W machines states are to be inserted.
3. Cascade address is valid between first and second INTA cycle.
4. Two INTA cycles run back-to-back. The 8086 LOCAL ADDR/DATA BUS is floating during both INTA cycles. Control for pointer address is shown for second INTA cycle.
5. Signals at 8284A or 8288 are shown for reference only.
6. The issuance of the 8288 command and control signals ($\overline{MRDC}$, $\overline{MWTC}$, $\overline{AMWC}$, $\overline{IORC}$, $\overline{IOWC}$, $\overline{AIOWC}$, $\overline{INTA}$ and DEN) lags the active high 8288 CEN.
7. All timing measurements are made at 1.5V unless otherwise noted.
8. Status inactive in state just prior to T_4.

WAVEFORMS (Continued)

ASYNCHRONOUS SIGNAL RECOGNITION

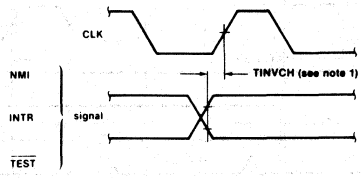

NOTE: 1. SETUP REQUIREMENTS FOR ASYNCHRONOUS SIGNALS ONLY TO GUARANTEE RECOGNITION AT NEXT CLK

BUS LOCK SIGNAL TIMING (MAXIMUM MODE ONLY)

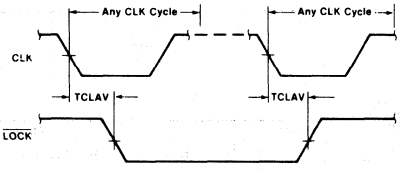

RESET TIMING

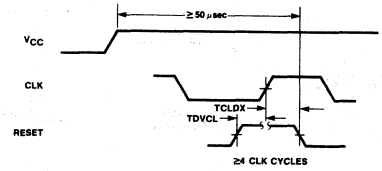

REQUEST/GRANT SEQUENCE TIMING (MAXIMUM MODE ONLY)

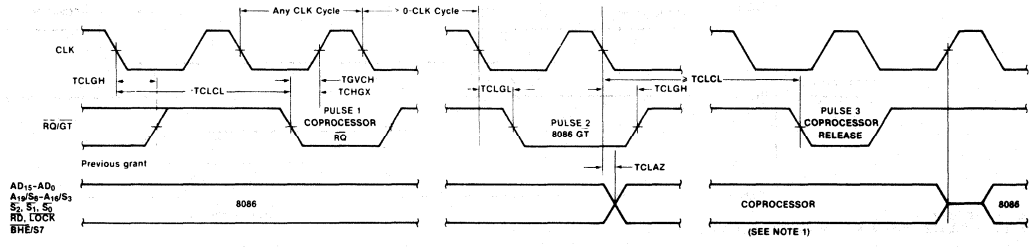

NOTES: 1. THE COPROCESSOR MAY NOT DRIVE THE BUSES OUTSIDE THE REGION SHOWN WITHOUT RISKING CONTENTION.

HOLD/HOLD ACKNOWLEDGE TIMING (MINIMUM MODE ONLY)

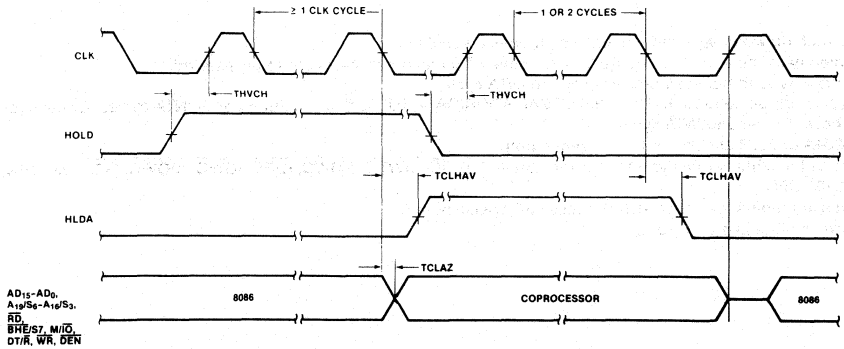

Table 2. Instruction Set Summary

DATA TRANSFER

MOV = Move:

	76543210	76543210	76543210	76543210
Register/memory to/from register	100010dw	mod reg r/m		
Immediate to register/memory	1100011w	mod000 r/m	data	data if w=1
Immediate to register	1011w reg	data	data if w=1	
Memory to accumulator	1010000w	addr-low	addr-high	
Accumulator to memory	1010001w	addr-low	addr-high	
Register/memory to segment register	10001110	mod0reg r/m		
Segment register to register/memory	10001100	mod0reg r/m		

PUSH = Push:

Register/memory	11111111	mod110 r/m
Register	01010 reg	
Segment register	000reg110	

POP = Pop:

Register/memory	10001111	mod000 r/m
Register	01011 reg	
Segment register	000reg111	

XCHG = Exchange:

Register/memory with register	1000011w	mod reg r/m
Register with accumulator	10010 reg	

IN=Input from:

Fixed port	1110010w	port
Variable port	1110110w	

OUT = Output to:

Fixed port	1110011w	port
Variable port	1110111w	

XLAT=Translate byte to AL	11010111		
LEA=Load EA to register	10001101	mod reg r/m	
LDS=Load pointer to DS	11000101	mod reg r/m	
LES=Load pointer to ES	11000100	mod reg r/m	
LAHF=Load AH with flags	10011111		
SAHF=Store AH into flags	10011110		
PUSHF=Push flags	10011100		
POPF=Pop flags	10011101		

ARITHMETIC

ADD = Add:

Reg./memory with register to either	000000dw	mod reg r/m		
Immediate to register/memory	100000sw	mod000 r/m	data	data if s:w=01
Immediate to accumulator	0000010w	data	data if w=1	

ADC = Add with carry:

Reg./memory with register to either	000100dw	mod reg r/m		
Immediate to register/memory	100000sw	mod010 r/m	data	data if s:w=01
Immediate to accumulator	0001010w	data	data if w=1	

INC = Increment:

Register/memory	1111111w	mod000 r/m		
Register	01000 reg			
AAA=ASCII adjust for add	00110111			
DAA=Decimal adjust for add	00100111			

SUB = Subtract:

Reg./memory and register to either	001010dw	mod reg r/m		
Immediate from register/memory	100000sw	mod101 r/m	data	data if s:w=01
Immediate from accumulator	0010110w	data	data if w=1	

SBB = Subtract with borrow

Reg./memory and register to either	000110dw	mod reg r/m		
Immediate from register/memory	100000sw	mod011 r/m	data	data if s:w=01
Immediate from accumulator	0001110w	data	data if w=1	

DEC = Decrement:

	76543210	76543210	76543210	76543210
Register/memory	1111111w	mod001 r/m		
Register	01001 reg			

NEG=Change sign: 1111011w | mod011 r/m

CMP = Compare:

Register/memory and register	001110dw	mod reg r/m		
Immediate with register/memory	100000sw	mod111 r/m	data	data if s:w=01
Immediate with accumulator	0011110w	data	data if w=1	

AAS ASCII adjust for subtract	00111111			
DAS Decimal adjust for subtract	00101111			
MUL Multiply (unsigned)	1111011w	mod100 r/m		
IMUL Integer multiply (signed)	1111011w	mod101 r/m		
AAM ASCII adjust for multiply	11010100	00001010		
DIV Divide (unsigned)	1111011w	mod110 r/m		
IDIV Integer divide (signed)	1111011w	mod111 r/m		
AAD ASCII adjust for divide	11010101	00001010		
CBW Convert byte to word	10011000			
CWD Convert word to double word	10011001			

LOGIC

NOT Invert	1111011w	mod010 r/m		
SHL/SAL Shift logical/arithmetic left	110100vw	mod100 r/m		
SHR Shift logical right	110100vw	mod101 r/m		
SAR Shift arithmetic right	110100vw	mod111 r/m		
ROL Rotate left	110100vw	mod000 r/m		
ROR Rotate right	110100vw	mod001 r/m		
RCL Rotate through carry flag left	110100vw	mod010 r/m		
RCR Rotate through carry right	110100vw	mod011 r/m		

AND = And:

Reg./memory and register to either	001000dw	mod reg r/m		
Immediate to register/memory	1000000w	mod100 r/m	data	data if w=1
Immediate to accumulator	0010010w	data	data if w=1	

TEST = And function to flags, no result:

Register/memory and register	1000010w	mod reg r/m		
Immediate data and register/memory	1111011w	mod000 r/m	data	data if w=1
Immediate data and accumulator	1010100w	data	data if w=1	

OR = Or:

Reg./memory and register to either	000010dw	mod reg r/m		
Immediate to register/memory	1000000w	mod001 r/m	data	data if w=1
Immediate to accumulator	0000110w	data	data if w=1	

XOR = Exclusive or:

Reg./memory and register to either	001100dw	mod reg r/m		
Immediate to register/memory	1000000w	mod110 r/m	data	data if w=1
Immediate to accumulator	0011010w	data	data if w=1	

STRING MANIPULATION

REP=Repeat	1111001z
MOVS=Move byte/word	1010010w
CMPS=Compare byte/word	1010011w
SCAS=Scan byte/word	1010111w
LODS=Load byte/wd to AL/AX	1010110w
STOS=Stor byte/wd from AL/A	1010101w

Mnemonics ©Intel, 1978

Table 2. Instruction Set Summary (Continued)

CONTROL TRANSFER

CALL = Call:	76543210	76543210	76543210
Direct within segment	11101000	disp-low	disp-high
Indirect within segment	11111111	mod 010 r/m	
Direct intersegment	10011010	offset-low	offset-high
		seg-low	seg-high
Indirect intersegment	11111111	mod 011 r/m	

JMP = Unconditional Jump:			
Direct within segment	11101001	disp-low	disp-high
Direct within segment-short	11101011	disp	
Indirect within segment	11111111	mod 100 r/m	
Direct intersegment	11101010	offset-low	offset-high
		seg-low	seg-high
Indirect intersegment	11111111	mod 101 r/m	

RET = Return from CALL:			
Within segment	11000011		
Within seg. adding immed to SP	11000010	data-low	data-high
Intersegment	11001011		
Intersegment, adding immediate to SP	11001010	data-low	data-high

JE/JZ=Jump on equal/zero	01110100	disp
JL/JNGE=Jump on less/not greater or equal	01111100	disp
JLE/JNG=Jump on less or equal/not greater	01111110	disp
JB/JNAE=Jump on below/not above or equal	01110010	disp
JBE/JNA=Jump on below or equal/ not above	01110110	disp
JP/JPE=Jump on parity/parity even	01111010	disp
JO=Jump on overflow	01110000	disp
JS=Jump on sign	01111000	disp
JNE/JNZ=Jump on not equal/not zero	01110101	disp
JNL/JGE=Jump on not less/greater or equal	01111101	disp
JNLE/JG=Jump on not less or equal/ greater	01111111	disp

	76543210	76543210
JNB/JAE=Jump on not below/above or equal	01110011	disp
JNBE/JA=Jump on not below or equal/above	01110111	disp
JNP/JPO=Jump on not par/par odd	01111011	disp
JNO=Jump on not overflow	01110001	disp
JNS=Jump on not sign	01111001	disp
LOOP Loop CX times	11100010	disp
LOOPZ/LOOPE=Loop while zero/equal	11100001	disp
LOOPNZ/LOOPNE=Loop while not zero/equal	11100000	disp
JCXZ=Jump on CX zero	11100011	disp

INT = Interrupt		
Type specified	11001101	type
Type 3	11001100	
INTO=Interrupt on overflow	11001110	
IRET=Interrupt return	11001111	

PROCESSOR CONTROL

CLC=Clear carry	11111000	
CMC=Complement carry	11110101	
STC=Set carry	11111001	
CLD=Clear direction	11111100	
STD=Set direction	11111101	
CLI=Clear interrupt	11111010	
STI=Set interrupt	11111011	
HLT=Halt	11110100	
WAIT=Wait	10011011	
ESC=Escape (to external device)	11011xxx	mod x x x r/m
LOCK=Bus lock prefix	11110000	

Footnotes:

AL = 8-bit accumulator
AX = 16-bit accumulator
CX = Count register
DS = Data segment
ES = Extra segment
Above/below refers to unsigned value.
Greater = more positive;
Less = less positive (more negative) signed values
if d = 1 then "to" reg; if d = 0 then "from" reg
if w = 1 then word instruction; if w = 0 then byte instruction

if mod = 11 then r/m is treated as a REG field
if mod = 00 then DISP = 0*, disp-low and disp-high are absent
if mod = 01 then DISP = disp-low sign-extended to 16-bits, disp-high is absent
if mod = 10 then DISP = disp-high: disp-low
if r/m = 000 then EA = (BX) + (SI) + DISP
if r/m = 001 then EA = (BX) + (DI) + DISP
if r/m = 010 then EA = (BP) + (SI) + DISP
if r/m = 011 then EA = (BP) + (DI) + DISP
if r/m = 100 then EA = (SI) + DISP
if r/m = 101 then EA = (DI) + DISP
if r/m = 110 then EA = (BP) + DISP*
if r/m = 111 then EA = (BX) + DISP
DISP follows 2nd byte of instruction (before data if required)

*except if mod = 00 and r/m = 110 then EA = disp-high: disp-low.

if s:w = 01 then 16 bits of immediate data form the operand.
if s:w = 11 then an immediate data byte is sign extended to form the 16-bit operand.
if v = 0 then "count" = 1; if v = 1 then "count" in (CL)
x = don't care
z is used for string primitives for comparison with Z.F FLAG.

SEGMENT OVERRIDE PREFIX

001 reg 110

REG is assigned according to the following table:

16-Bit (w = 1)	8-Bit (w = 0)	Segment
000 AX	000 AL	00 ES
001 CX	001 CL	01 CS
010 DX	010 DL	10 SS
011 BX	011 BL	11 DS
100 SP	100 AH	
101 BP	101 CH	
110 SI	110 DH	
111 DI	111 BH	

Instructions which reference the flag register file as a 16-bit object use the symbol FLAGS to represent the file:

FLAGS = X:X:X:X:(OF):(DF):(IF):(TF):(SF):(ZF):X:(AF):X:(PF):X:(CF)

Mnemonics © Intel, 1978

PRELIMINARY

iAPX 88/10
8-BIT HMOS MICROPROCESSOR
8088/8088-2

- 8-Bit Data Bus Interface
- 16-Bit Internal Architecture
- Direct Addressing Capability to 1 Mbyte of Memory
- Direct Software Compatibility with iAPX 86/10 (8086 CPU)
- 14-Word by 16-Bit Register Set with Symmetrical Operations
- 24 Operand Addressing Modes
- Byte, Word, and Block Operations
- 8-Bit and 16-Bit Signed and Unsigned Arithmetic in Binary or Decimal, Including Multiply and Divide
- Compatible with 8155-2, 8755A-2 and 8185-2 Multiplexed Peripherals
- Two Clock Rates:
  5 MHz for 8088
  8 MHz for 8088-2

The Intel® iAPX 88/10 is a new generation, high performance microprocessor implemented in N-channel, depletion load, silicon gate technology (HMOS), and packaged in a 40-pin CerDIP package. The processor has attributes of both 8- and 16-bit microprocessors. It is directly compatible with iAPX 86/10 software and 8080/8085 hardware and peripherals.

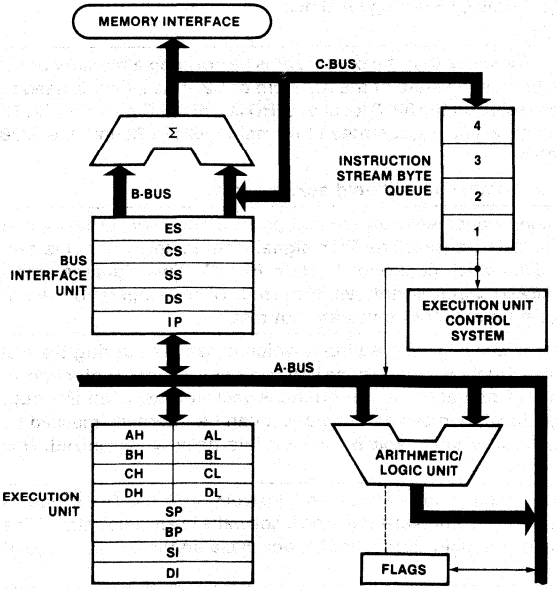

Figure 1. iAPX 88/10 CPU Functional Block Diagram

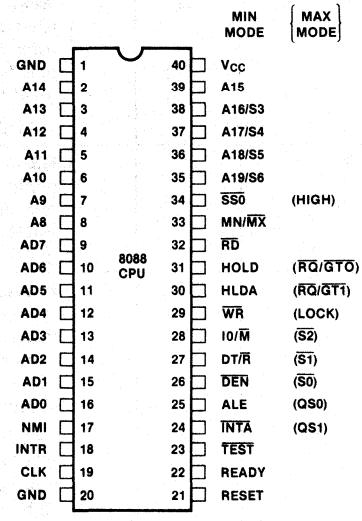

Figure 2. iAPX 88/10 Pin Configuration

Table 1. Pin Description

The following pin function descriptions are for 8088 systems in either minimum or maximum mode. The "local bus" in these descriptions is the direct multiplexed bus interface connection to the 8088 (without regard to additional bus buffers).

Symbol	Pin No.	Type	Name and Function
AD7–AD0	9-16	I/O	**Address Data Bus:** These lines constitute the time multiplexed memory/IO address (T1) and data (T2, T3, Tw, and T4) bus. These lines are active HIGH and float to 3-state OFF during interrupt acknowledge and local bus "hold acknowledge".
A15–A8	2-8, 39	O	**Address Bus:** These lines provide address bits 8 through 15 for the entire bus cycle (T1–T4). These lines do not have to be latched by ALE to remain valid. A15–A8 are active HIGH and float to 3-state OFF during interrupt acknowledge and local bus "hold acknowledge".
A19/S6, A18/S5, A17/S4, A16/S3	34-38	O	**Address/Status:** During T1, these are the four most significant address lines for memory operations. During I/O operations, these lines are LOW. During memory and I/O operations, status information is available on these lines during T2, T3, Tw, and T4. S6 is always low. The status of the interrupt enable flag bit (S5) is updated at the beginning of each clock cycle. S4 and S3 are encoded as shown. This information indicates which segment register is presently being used for data accessing. These lines float to 3-state OFF during local bus "hold acknowledge".

S4	S3	CHARACTERISTICS
0 (LOW)	0	Alternate Data
0	1	Stack
1 (HIGH)	0	Code or None
1	1	Data
S6 is 0 (LOW)		

$\overline{RD}$	32	O	**Read:** Read strobe indicates that the processor is performing a memory or I/O read cycle, depending on the state of the IO/$\overline{M}$ pin or S2. This signal is used to read devices which reside on the 8088 local bus. $\overline{RD}$ is active LOW during T2, T3 and Tw of any read cycle, and is guaranteed to remain HIGH in T2 until the 8088 local bus has floated. This signal floats to 3-state OFF in "hold acknowledge".
READY	22	I	**READY:** is the acknowledgement from the addressed memory or I/O device that it will complete the data transfer. The RDY signal from memory or I/O is synchronized by the 8284 clock generator to form READY. This signal is active HIGH. The 8088 READY input is not synchronized. Correct operation is not guaranteed if the set up and hold times are not met.
INTR	18	I	**Interrupt Request:** is a level triggered input which is sampled during the last clock cycle of each instruction to determine if the processor should enter into an interrupt acknowledge operation. A subroutine is vectored to via an interrupt vector lookup table located in system memory. It can be internally masked by software resetting the interrupt enable bit. INTR is internally synchronized. This signal is active HIGH.
$\overline{TEST}$	23	I	**$\overline{TEST}$:** input is examined by the "wait for test" instruction. If the $\overline{TEST}$ input is LOW, execution continues, otherwise the processor waits in an "idle" state. This input is synchronized internally during each clock cycle on the leading edge of CLK.
NMI	17	I	**Non-Maskable Interrupt:** is an edge triggered input which causes a type 2 interrupt. A subroutine is vectored to via an interrupt vector lookup table located in system memory. NMI is not maskable internally by software. A transition from a LOW to HIGH initiates the interrupt at the end of the current instruction. This input is internally synchronized.

Table 1. Pin Description (Continued)

Symbol	Pin No.	Type	Name and Function
RESET	21	I	**RESET:** causes the processor to immediately terminate its present activity. The signal must be active HIGH for at least four clock cycles. It restarts execution, as described in the instruction set description, when RESET returns LOW. RESET is internally synchronized.
CLK	19	I	**Clock:** provides the basic timing for the processor and bus controller. It is asymmetric with a 33% duty cycle to provide optimized internal timing.
V_{CC}	40		**V_{CC}:** is the +5V ±10% power supply pin.
GND	1, 20		**GND:** are the ground pins.
MN/$\overline{MX}$	33	I	**Minimum/Maximum:** indicates what mode the processor is to operate in. The two modes are discussed in the following sections.

The following pin function descriptions are for the 8088 minimum mode (i.e., MN/MX = V_{CC}). Only the pin functions which are unique to minimum mode are described; all other pin functions are as described above.

IO/$\overline{M}$	28	O	**Status Line:** is an inverted maximum mode $\overline{S2}$. It is used to distinguish a memory access from an I/O access. IO/$\overline{M}$ becomes valid in the T4 preceding a bus cycle and remains valid until the final T4 of the cycle (I/O=HIGH, M=LOW). IO/$\overline{M}$ floats to 3-state OFF in local bus "hold acknowledge".
$\overline{WR}$	29	O	**Write:** strobe indicates that the processor is performing a write memory or write I/O cycle, depending on the state of the IO/$\overline{M}$ signal. WR is active for T2, T3, and Tw of any write cycle. It is active LOW, and floats to 3-state OFF in local bus "hold acknowledge".
$\overline{INTA}$	24	O	**INTA:** is used as a read strobe for interrupt acknowledge cycles. It is active LOW during T2, T3, and Tw of each interrupt acknowledge cycle.
ALE	25	O	**Address Latch Enable:** is provided by the processor to latch the address into the 8282/8283 address latch. It is a HIGH pulse active during clock low of T1 of any bus cycle. Note that ALE is never floated.
DT/$\overline{R}$	27	O	**Data Transmit/Receive:** is needed in a minimum system that desires to use an 8286/8287 data bus transceiver. It is used to control the direction of data flow through the transceiver. Logically, DT/$\overline{R}$ is equivalent to $\overline{S1}$ in the maximum mode, and its timing is the same as for IO/$\overline{M}$ (T=HIGH, R=LOW). This signal floats to 3-state OFF in local "hold acknowledge".
$\overline{DEN}$	26	O	**Data Enable:** is provided as an output enable for the 8286/8287 in a minimum system which uses the transceiver. $\overline{DEN}$ is active LOW during each memory and I/O access, and for $\overline{INTA}$ cycles. For a read or $\overline{INTA}$ cycle, it is active from the middle of T2 until the middle of T4, while for a write cycle, it is active from the beginning of T2 until the middle of T4. $\overline{DEN}$ floats to 3-state OFF during local bus "hold acknowledge".
HOLD, HLDA	30,31	I, O	**HOLD:** indicates that another master is requesting a local bus "hold". To be acknowledged, HOLD must be active HIGH. The processor receiving the "hold" request will issue HLDA (HIGH) as an acknowledgement, in the middle of a T4 or TI clock cycle. Simultaneous with the issuance of HLDA the processor will float the local bus and control lines. After HOLD is detected as being LOW, the processor lowers HLDA, and when the processor needs to run another cycle, it will again drive the local bus and control lines. Hold is not an asynchronous input. External synchronization should be provided if the system cannot otherwise guarantee the set up time.
$\overline{SSO}$	34	O	**Status line:** is logically equivalent to $\overline{SO}$ in the maximum mode. The combination of $\overline{SSO}$, IO/$\overline{M}$ and DT/$\overline{R}$ allows the system to completely decode the current bus cycle status.

IO/$\overline{M}$	DT/$\overline{R}$	$\overline{SSO}$	CHARACTERISTICS
1 (HIGH)	0	0	Interrupt Acknowledge
1	0	1	Read I/O port
1	1	0	Write I/O port
1	1	1	Halt
0 (LOW)	0	0	Code access
0	0	1	Read memory
0	1	0	Write memory
0	1	1	Passive

Table 1. Pin Description (Continued)

The following pin function descriptions are for the 8088, 8228 system in maximum mode (i.e., MN/MX=GND.) Only the pin functions which are unique to maximum mode are described; all other pin functions are as described above.

Symbol	Pin No.	Type	Name and Function
$\overline{S2}$, $\overline{S1}$, $\overline{S0}$	26-28	O	**Status:** is active during clock high of T4, T1, and T2, and is returned to the passive state (1,1,1) during T3 or during Tw when READY is HIGH. This status is used by the 8288 bus controller to generate all memory and I/O access control signals. Any change by $\overline{S2}$, $\overline{S1}$, or $\overline{S0}$ during T4 is used to indicate the beginning of a bus cycle, and the return to the passive state in T3 or Tw is used to indicate the end of a bus cycle. These signals float to 3-state OFF during "hold acknowledge". During the first clock cycle after RESET becomes active, these signals are active HIGH. After this first clock, they float to 3-state OFF.
$\overline{RQ}/\overline{GT0}$, $\overline{RQ}/\overline{GT1}$	30, 31	I/O	**Request/Grant:** pins are used by other local bus masters to force the processor to release the local bus at the end of the processor's current bus cycle. Each pin is bidirectional with $\overline{RQ}/\overline{GT0}$ having higher priority than $\overline{RQ}/\overline{GT1}$. $\overline{RQ}/\overline{GT}$ has an internal pull-up resistor, so may be left unconnected. The request/grant sequence is as follows (See Figure 8): 1. A pulse of one CLK wide from another local bus master indicates a local bus request ("hold") to the 8088 (pulse 1). 2. During a T4 or TI clock cycle, a pulse one clock wide from the 8088 to the requesting master (pulse 2), indicates that the 8088 has allowed the local bus to float and that it will enter the "hold acknowledge" state at the next CLK. The CPU's bus interface unit is disconnected logically from the local bus during "hold acknowledge". The same rules as for HOLD/HOLDA apply as for when the bus is released. 3. A pulse one CLK wide from the requesting master indicates to the 8088 (pulse 3) that the "hold" request is about to end and that the 8088 can reclaim the local bus at the next CLK. The CPU then enters T4. Each master-master exchange of the local bus is a sequence of three pulses. There must be one idle CLK cycle after each bus exchange. Pulses are active LOW. If the request is made while the CPU is performing a memory cycle, it will release the local bus during T4 of the cycle when all the following conditions are met: 1. Request occurs on or before T2. 2. Current cycle is not the low bit of a word. 3. Current cycle is not the first acknowledge of an interrupt acknowledge sequence. 4. A locked instruction is not currently executing. If the local bus is idle when the request is made the two possible events will follow: 1. Local bus will be released during the next clock. 2. A memory cycle will start within 3 clocks. Now the four rules for a currently active memory cycle apply with condition number 1 already satisfied.

$\overline{S2}$	$\overline{S1}$	$\overline{S0}$	CHARACTERISTICS
0 (LOW)	0	0	Interrupt Acknowledge
0	0	1	Read I/O port
0	1	0	Write I/O port
0	1	1	Halt
1 (HIGH)	0	0	Code access
1	0	1	Read memory
1	1	0	Write memory
1	1	1	Passive

Table 1. Pin Description (Continued)

Symbol	Pin No.	Type	Name and Function
$\overline{LOCK}$	29	O	**$\overline{LOCK}$:** indicates that other system bus masters are not to gain control of the system bus while $\overline{LOCK}$ is active (LOW). The $\overline{LOCK}$ signal is activated by the "LOCK" prefix instruction and remains active until the completion of the next instruction. This signal is active LOW, and floats to 3-state off in "hold acknowledge".
QS1, QS0	24, 25	O	**Queue Status:** provide status to allow external tracking of the internal 8088 instruction queue. The queue status is valid during the CLK cycle after which the queue operation is performed.
—	34	O	Pin 34 is always high in the maximum mode.

QS1	QS0	CHARACTERISTICS
0 (LOW)	0	No operation
0	1	First byte of opcode from queue
1 (HIGH)	0	Empty the queue
1	1	Subsequent byte from queue

FUNCTIONAL DESCRIPTION

Memory Organization

The processor provides a 20-bit address to memory which locates the byte being referenced. The memory is organized as a linear array of up to 1 million bytes, addressed as 00000(H) to FFFFF(H). The memory is logically divided into code, data, extra data, and stack segments of up to 64K bytes each, with each segment falling on 16-byte boundaries. (See Figure 3.)

All memory references are made relative to base addresses contained in high speed segment registers. The segment types were chosen based on the addressing needs of programs. The segment register to be selected is automatically chosen according to the rules of the following table. All information in one segment type share the same logical attributes (e.g. code or data). By structuring memory into relocatable areas of similar characteristics and by automatically selecting segment registers, programs are shorter, faster, and more structured.

Word (16-bit) operands can be located on even or odd address boundaries. For address and data operands, the least significant byte of the word is stored in the lower valued address location and the most significant byte in the next higher address location. The BIU will automatically execute two fetch or write cycles for 16-bit operands.

Certain locations in memory are reserved for specific CPU operations. (See Figure 4.) Locations from addresses FFFF0H through FFFFFH are reserved for operations including a jump to the initial system initialization routine. Following RESET, the CPU will always begin execution at location FFFF0H where the jump must be located. Locations 00000H through 003FFH are reserved for interrupt operations. Four-byte pointers consisting of a 16-bit segment address and a 16-bit offset address direct program flow to one of the 256 possible interrupt service routines. The pointer elements are assumed to have been stored at their respective places in reserved memory prior to the occurrence of interrupts.

Minimum and Maximum Modes

The requirements for supporting minimum and maximum 8088 systems are sufficiently different that they cannot be done efficiently with 40 uniquely defined pins. Consequently, the 8088 is equipped with a strap pin (MN/$\overline{MX}$) which defines the system configuration. The definition of a certain subset of the pins changes, dependent on the condition of the strap pin. When the MN/$\overline{MX}$ pin is strapped to GND, the 8088 defines pins 24 through 31 and 34 in maximum mode. When the MN/$\overline{MX}$ pin is strapped to V_{CC}, the 8088 generates bus control signals itself on pins 24 through 31 and 34.

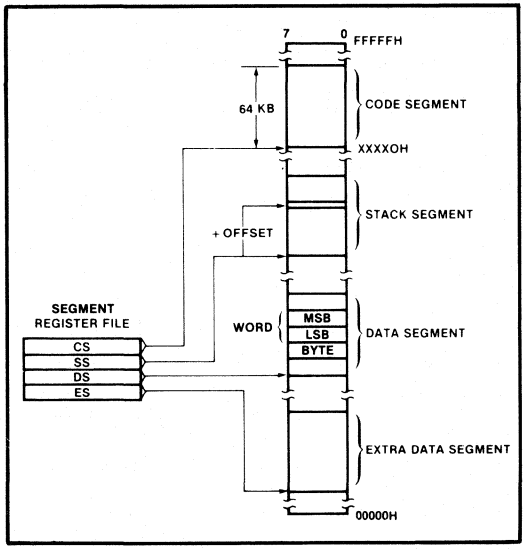

Figure 3. Memory Organization

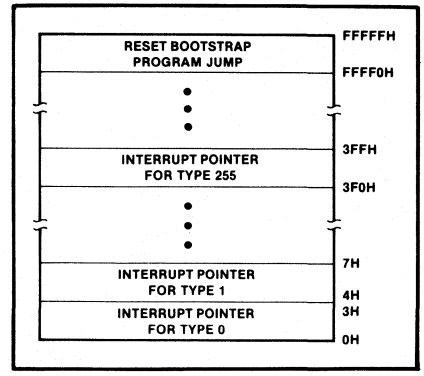

Figure 4. Reserved Memory Locations

Memory Reference Need	Segment Register Used	Segment Selection Rule
Instructions	CODE (CS)	Automatic with all instruction prefetch.
Stack	STACK (SS)	All stack pushes and pops. Memory references relative to BP base register except data references.
Local Data	DATA (DS)	Data references when: relative to stack, destination of string operation, or explicitly overridden.
External (Global) Data	EXTRA (ES)	Destination of string operations: Explicitly selected using a segment override.

The minimum mode 8088 can be used with either a multiplexed or demultiplexed bus. The multiplexed bus configuration is compatible with the MCS-85™ multiplexed bus peripherals (8155, 8156, 8355, 8755A, and 8185). This configuration (See Figure 5) provides the user with a minimum chip count system. This architecture provides the 8088 processing power in a highly integrated form.

The demultiplexed mode requires one latch (for 64K addressability) or two latches (for a full megabyte of addressing). A third latch can be used for buffering if the address bus loading requires it. An 8286 or 8287 transceiver can also be used if data bus buffering is required. (See Figure 6.) The 8088 provides $\overline{DEN}$ and DT/$\overline{R}$ to control the transceiver, and ALE to latch the addresses. This configuration of the minimum mode provides the standard demultiplexed bus structure with heavy bus buffering and relaxed bus timing requirements.

The maximum mode employs the 8288 bus controller. (See Figure 7.) The 8288 decodes status lines $\overline{S0}$, $\overline{S1}$, and $\overline{S2}$, and provides the system with all bus control signals. Moving the bus control to the 8288 provides better source and sink current capability to the control lines, and frees the 8088 pins for extended large system features. Hardware lock, queue status, and two request/grant interfaces are provided by the 8088 in maximum mode. These features allow co-processors in local bus and remote bus configurations.

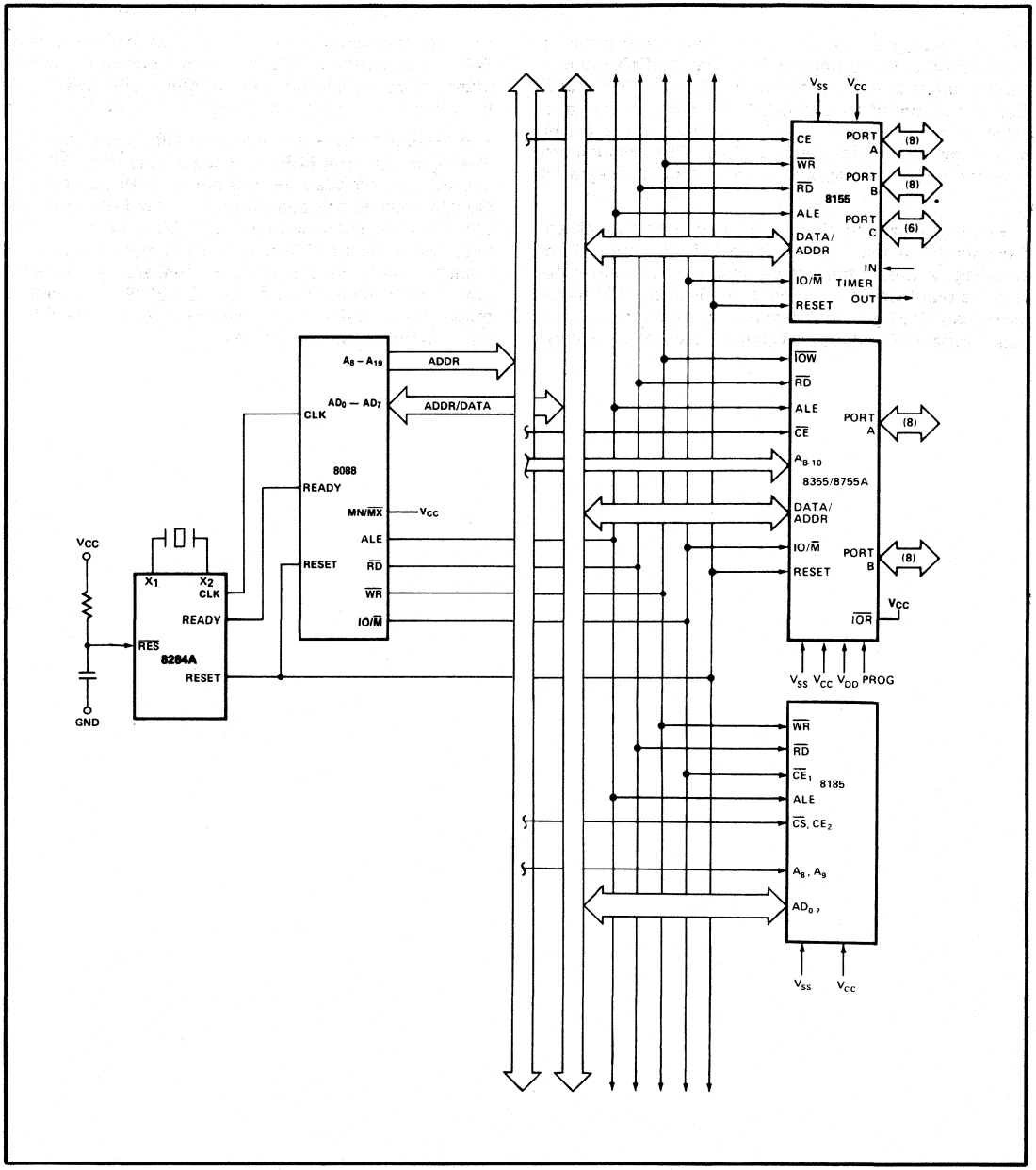

Figure 5. Multiplexed Bus Configuration

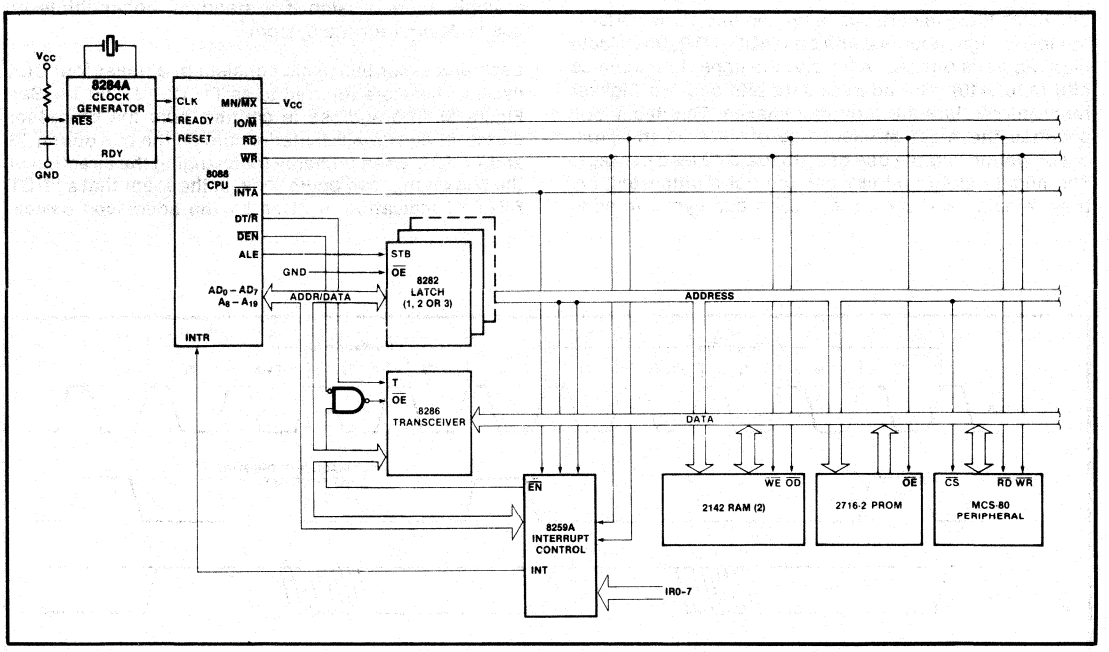

Figure 6. Demultiplexed Bus Configuration

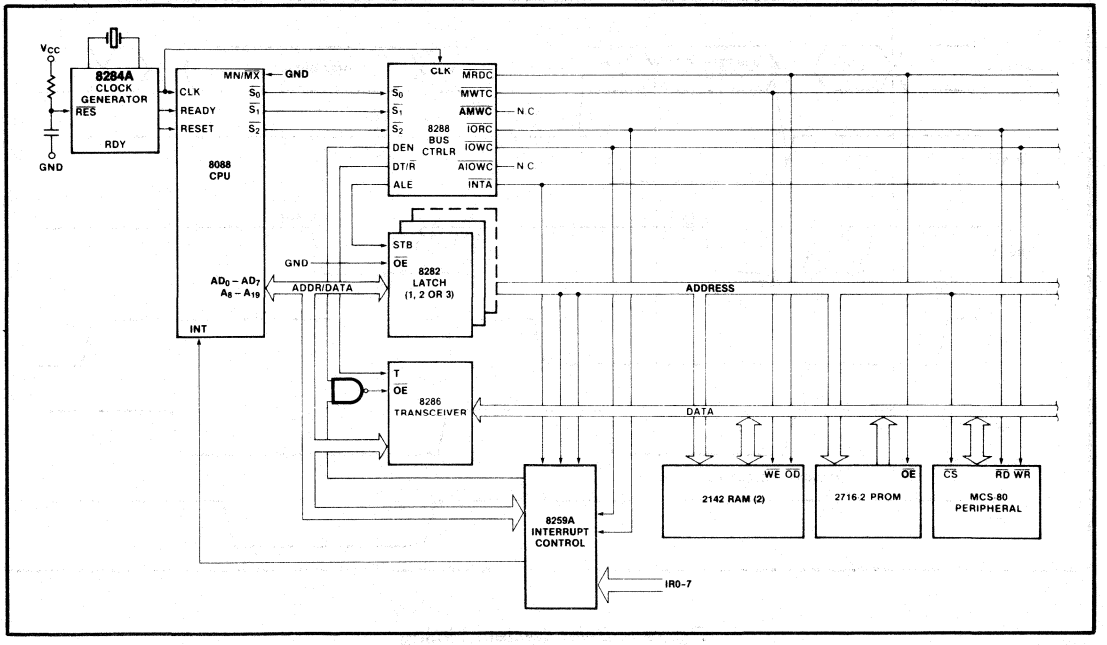

Figure 7. Fully Buffered System Using Bus Controller

Bus Operation

The 8088 address/data bus is broken into three parts — the lower eight address/data bits (AD0-AD7), the middle eight address bits (A8-A15), and the upper four address bits (A16-A19). The address/data bits and the highest four address bits are time multiplexed. This technique provides the most efficient use of pins on the processor, permitting the use of a standard 40 lead package. The middle eight address bits are not multiplexed, i.e. they remain valid throughout each bus cycle. In addition, the bus can be demultiplexed at the processor with a single address latch if a standard, non-multiplexed bus is desired for the system.

Each processor bus cycle consists of at least four CLK cycles. These are referred to as T1, T2, T3, and T4. (See Figure 8). The address is emitted from the processor during T1 and data transfer occurs on the bus during T3 and T4. T2 is used primarily for changing the direction of the bus during read operations. In the event that a "NOT READY" indication is given by the addressed device.

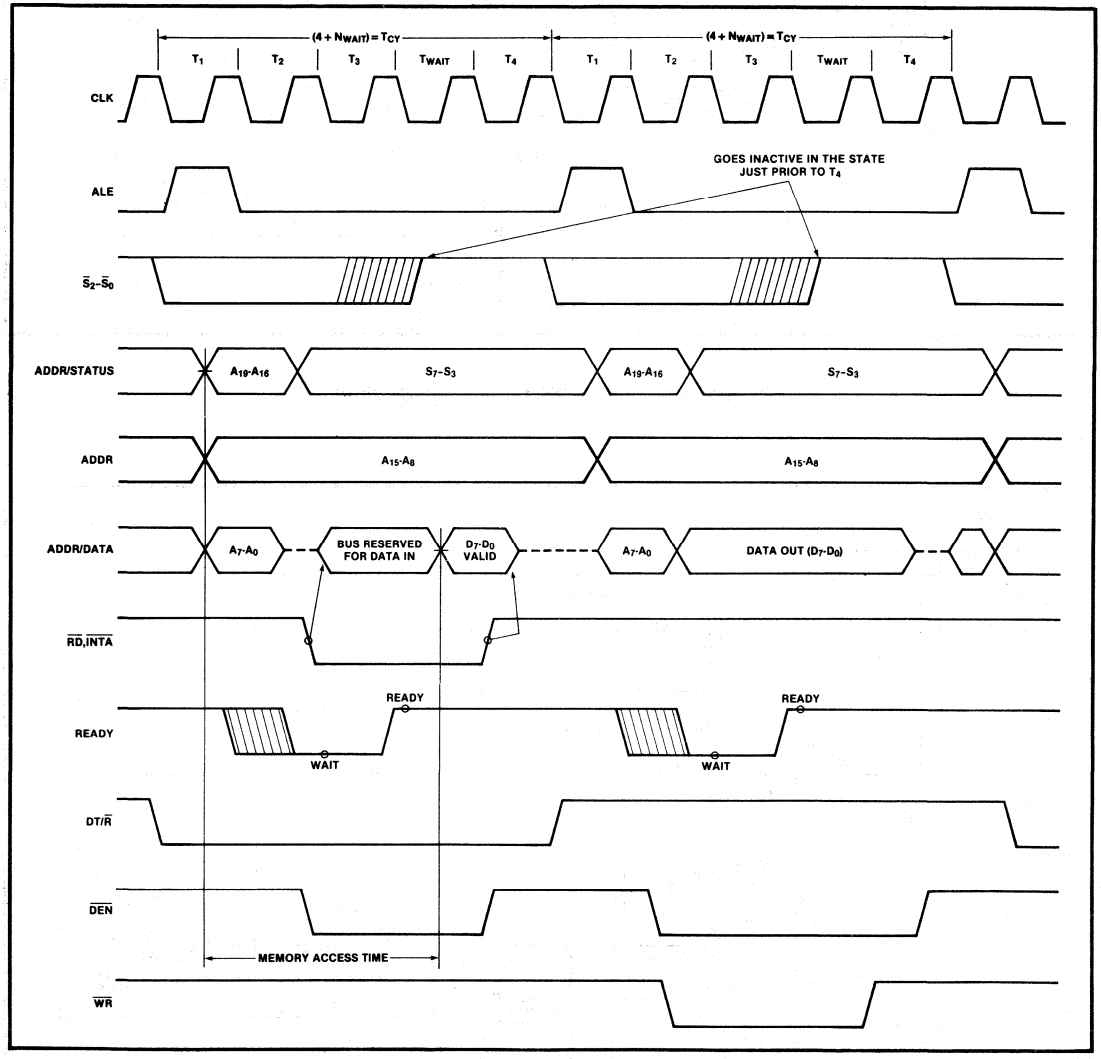

Figure 8. Basic System Timing

"wait" states (Tw) are inserted between T3 and T4. Each inserted "wait" state is of the same duration as a CLK cycle. Periods can occur between 8088 driven bus cycles. These are referred to as "idle" states (Ti), or inactive CLK cycles. The processor uses these cycles for internal housekeeping.

During T1 of any bus cycle, the ALE (address latch enable) signal is emitted (by either the processor or the 8288 bus controller, depending on the MN/$\overline{MX}$ strap). At the trailing edge of this pulse, a valid address and certain status information for the cycle may be latched.

Status bits $\overline{S0}$, $\overline{S1}$, and $\overline{S2}$ are used by the bus controller, in maximum mode, to identify the type of bus transaction according to the following table:

$\overline{S_2}$	$\overline{S_1}$	$\overline{S_0}$	CHARACTERISTICS
0 (LOW)	0	0	Interrupt Acknowledge
0	0	1	Read I/O
0	1	0	Write I/O
0	1	1	Halt
1 (HIGH)	0	0	Instruction Fetch
1	0	1	Read Data from Memory
1	1	0	Write Data to Memory
1	1	1	Passive (no bus cycle)

Status bits S3 through S6 are multiplexed with high order address bits and are therefore valid during T2 through T4. S3 and S4 indicate which segment register was used for this bus cycle in forming the address according to the following table:

S_4	S_3	CHARACTERISTICS
0 (LOW)	0	Alternate Data (extra segment)
0	1	Stack
1 (HIGH)	0	Code or None
1	1	Data

S5 is a reflection of the PSW interrupt enable bit. S6 is always equal to 0.

I/O Addressing

In the 8088, I/O operations can address up to a maximum of 64K I/O registers. The I/O address appears in the same format as the memory address on bus lines A15-A0. The address lines A19-A16 are zero in I/O operations. The variable I/O instructions, which use register DX as a pointer, have full address capability, while the direct I/O instructions directly address one or two of the 256 I/O byte locations in page 0 of the I/O address space. I/O ports are addressed in the same manner as memory locations.

Designers familiar with the 8085 or upgrading an 8085 design should note that the 8085 addresses I/O with an 8-bit address on both halves of the 16-bit address bus. The 8088 uses a full 16-bit address on its lower 16 address lines.

EXTERNAL INTERFACE

Processor Reset and Initialization

Processor initialization or start up is accomplished with activation (HIGH) of the RESET pin. The 8088 RESET is required to be HIGH for greater than four clock cycles. The 8088 will terminate operations on the high-going edge of RESET and will remain dormant as long as RESET is HIGH. The low-going transition of RESET triggers an internal reset sequence for approximately 7 clock cycles. After this interval the 8088 operates normally, beginning with the instruction in absolute location FFFF0H. (See Figure 4.) The RESET input is internally synchronized to the processor clock. At initialization, the HIGH to LOW transition of RESET must occur no sooner than 50 μs after power up, to allow complete initialization of the 8088.

If INTR is asserted sooner than nine clock cycles after the end of RESET, the processor may execute one instruction before responding to the interrupt.

All 3-state outputs float to 3-state OFF during RESET. Status is active in the idle state for the first clock after RESET becomes active and then floats to 3-state OFF.

Interrupt Operations

Interrupt operations fall into two classes: software or hardware initiated. The software initiated interrupts and software aspects of hardware interrupts are specified in the instruction set description in the iAPX 88 Book or the iAPX 86, 88 User's Manual. Hardware interrupts can be classified as nonmaskable or maskable.

Interrupts result in a transfer of control to a new program location. A 256 element table containing address pointers to the interrupt service program locations resides in absolute locations 0 through 3FFH (see Figure 4), which are reserved for this purpose. Each element in the table is 4 bytes in size and corresponds to an interrupt "type." An interrupting device supplies an 8-bit type number, during the interrupt acknowledge sequence, which is used to vector through the appropriate element to the new interrupt service program location.

Non-Maskable Interrupt (NMI)

The processor provides a single non-maskable interrupt (NMI) pin which has higher priority than the maskable interrupt request (INTR) pin. A typical use would be to activate a power failure routine. The NMI is edge-triggered on a LOW to HIGH transition. The activation of this pin causes a type 2 interrupt.

NMI is required to have a duration in the HIGH state of greater than two clock cycles, but is not required to be synchronized to the clock. Any higher going transition of NMI is latched on-chip and will be serviced at the end of the current instruction or between whole moves (2 bytes in the case of word moves) of a block type instruction. Worst case response to NMI would be for multiply, divide, and variable shift instructions. There is no specification on the occurrence of the low-going edge; it may occur

before, during, or after the servicing of NMI. Another high-going edge triggers another response if it occurs after the start of the NMI procedure. The signal must be free of logical spikes in general and be free of bounces on the low-going edge to avoid triggering extraneous responses.

Maskable Interrupt (INTR)

The 8088 provides a single interrupt request input (INTR) which can be masked internally by software with the resetting of the interrupt enable (IF) flag bit. The interrupt request signal is level triggered. It is internally synchronized during each clock cycle on the high-going edge of CLK. To be responded to, INTR must be present (HIGH) during the clock period preceding the end of the current instruction or the end of a whole move for a block type instruction. During interrupt response sequence, further interrupts are disabled. The enable bit is reset as part of the response to any interrupt (INTR, NMI, software interrupt, or single step), although the FLAGS register which is automatically pushed onto the stack reflects the state of the processor prior to the interrupt. Until the old FLAGS register is restored, the enable bit will be zero unless specifically set by an instruction.

During the response sequence (See Figure 9), the processor executes two successive (back to back) interrupt acknowledge cycles. The 8088 emits the LOCK signal (maximum mode only) from T2 of the first bus cycle until T2 of the second. A local bus "hold" request will not be honored until the end of the second bus cycle. In the second bus cycle, a byte is fetched from the external interrupt system (e.g., 8259A PIC) which identifies the source (type) of the interrupt. This byte is multiplied by four and used as a pointer into the interrupt vector lookup table. An INTR signal left HIGH will be continually responded to within the limitations of the enable bit and sample period. The interrupt return instruction includes a flags pop which returns the status of the original interrupt enable bit when it restores the flags.

HALT

When a software HALT instruction is executed, the processor indicates that it is entering the HALT state in one of two ways, depending upon which mode is strapped. In minimum mode, the processor issues ALE, delayed by one clock cycle, to allow the system to latch the halt status. Halt status is available on IO/$\overline{M}$, DT/$\overline{R}$, and $\overline{SSO}$. In maximum mode, the processor issues appropriate HALT status on $\overline{S2}$, $\overline{S1}$, and $\overline{S0}$, and the 8288 bus controller issues one ALE. The 8088 will not leave the HALT state when a local bus hold is entered while in HALT. In this case, the processor reissues the HALT indicator at the end of the local bus hold. An interrupt request or RESET will force the 8088 out of the HALT state.

Read/Modify/Write (Semaphore) Operations via LOCK

The LOCK status information is provided by the processor when consecutive bus cycles are required during the execution of an instruction. This allows the processor to perform read/modify/write operations on memory (via the "exchange register with memory" instruction), without another system bus master receiving intervening memory cycles. This is useful in multiprocessor system configurations to accomplish "test and set lock" operations. The $\overline{LOCK}$ signal is activated (LOW) in the clock cycle following decoding of the LOCK prefix instruction. It is deactivated at the end of the last bus cycle of the instruction following the LOCK prefix. While $\overline{LOCK}$ is active, a request on a $\overline{RQ}$/$\overline{GT}$ pin will be recorded, and then honored at the end of the LOCK.

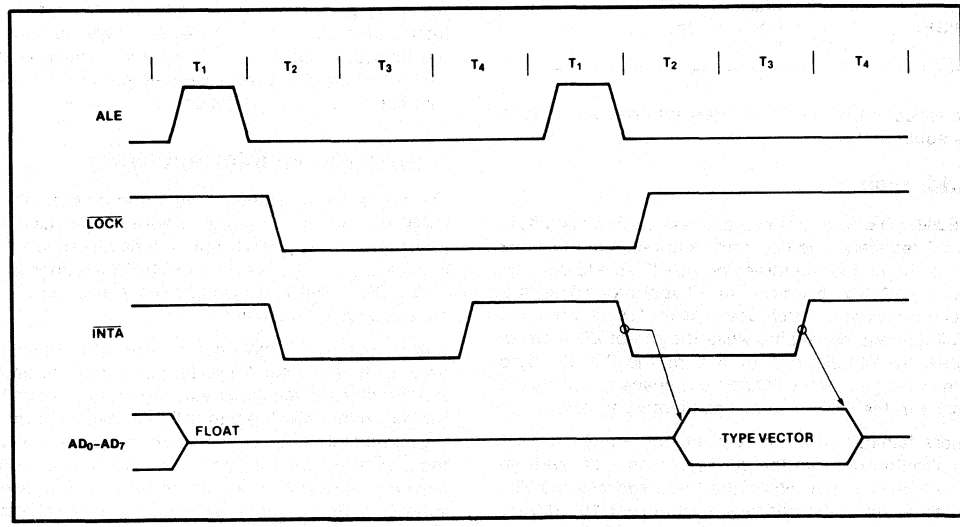

Figure 9. Interrupt Acknowledge Sequence

External Synchronization via $\overline{TEST}$

As an alternative to interrupts, the 8088 provides a single software-testable input pin ($\overline{TEST}$). This input is utilized by executing a WAIT instruction. The single WAIT instruction is repeatedly executed until the $\overline{TEST}$ input goes active (LOW). The execution of WAIT does not consume bus cycles once the queue is full.

If a local bus request occurs during WAIT execution, the 8088 3-states all output drivers. If interrupts are enabled, the 8088 will recognize interrupts and process them. The WAIT instruction is then refetched, and reexecuted.

Basic System Timing

In minimum mode, the MN/$\overline{MX}$ pin is strapped to V_{CC} and the processor emits bus control signals compatible with the 8085 bus structure. In maximum mode, the MN/$\overline{MX}$ pin is strapped to GND and the processor emits coded status information which the 8288 bus controller uses to generate MULTIBUS compatible bus control signals.

System Timing — Minimum System

(See Figure 8.)

The read cycle begins in T1 with the assertion of the address latch enable (ALE) signal. The trailing (low going) edge of this signal is used to latch the address information, which is valid on the address/data bus (AD0-AD7) at this time, into the 8282/8283 latch. Address lines A8 through A15 do not need to be latched because they remain valid throughout the bus cycle. From T1 to T4 the IO/$\overline{M}$ signal indicates a memory or I/O operation. At T2 the address is removed from the address/data bus and the bus goes to a high impedance state. The read control signal is also asserted at T2. The read ($\overline{RD}$) signal causes the addressed device to enable its data bus drivers to the local bus. Some time later, valid data will be available on the bus and the addressed device will drive the READY line HIGH. When the processor returns the read signal to a HIGH level, the addressed device will again 3-state its bus drivers. If a transceiver (8286/8287) is required to buffer the 8088 local bus, signals DT/$\overline{R}$ and $\overline{DEN}$ are provided by the 8088.

A write cycle also begins with the assertion of ALE and the emission of the address. The IO/$\overline{M}$ signal is again asserted to indicate a memory or I/O write operation. In T2, immediately following the address emission, the processor emits the data to be written into the addressed location. This data remains valid until at least the middle of T4. During T2, T3, and T_W, the processor asserts the write control signal. The write ($\overline{WR}$) signal becomes active at the beginning of T2, as opposed to the read, which is delayed somewhat into T2 to provide time for the bus to float.

The basic difference between the interrupt acknowledge cycle and a read cycle is that the interrupt acknowledge ($\overline{INTA}$) signal is asserted in place of the read ($\overline{RD}$) signal and the address bus is floated. (See Figure 9.) In the second of two successive $\overline{INTA}$ cycles, a byte of information is read from the data bus, as supplied by the interrupt system logic (i.e. 8259A priority interrupt controller). This byte identifies the source (type) of the interrupt. It is multiplied by four and used as a pointer into the interrupt vector lookup table, as described earlier.

Bus Timing — Medium Complexity Systems

(See Figure 10.)

For medium complexity systems, the MN/$\overline{MX}$ pin is connected to GND and the 8288 bus controller is added to the system, as well as an 8282/8283 latch for latching the system address, and an 8286/8287 transceiver to allow for bus loading greater than the 8088 is capable of handling. Signals ALE, $\overline{DEN}$, and DT/$\overline{R}$ are generated by the 8288 instead of the processor in this configuration, although their timing remains relatively the same. The 8088 status outputs ($\overline{S2}$, $\overline{S1}$, and $\overline{S0}$) provide type of cycle information and become 8288 inputs. This bus cycle information specifies read (code, data, or I/O), write (data or I/O), interrupt acknowledge, or software halt. The 8288 thus issues control signals specifying memory read or write, I/O read or write, or interrupt acknowledge. The 8288 provides two types of write strobes, normal and advanced, to be applied as required. The normal write strobes have data valid at the leading edge of write. The advanced write strobes have the same timing as read strobes, and hence, data is not valid at the leading edge of write. The 8286/8287 transceiver receives the usual T and $\overline{OE}$ inputs from the 8288's DT/$\overline{R}$ and $\overline{DEN}$ outputs.

The pointer into the interrupt vector table, which is passed during the second $\overline{INTA}$ cycle, can derive from an 8259A located on either the local bus or the system bus. If the master 8289A priority interrupt controller is positioned on the local bus, a TTL gate is required to disable the 8286/8287 transceiver when reading from the master 8259A during the interrupt acknowledge sequence and software "poll".

The 8088 Compared to the 8086

The 8088 CPU is an 8-bit processor designed around the 8086 internal structure. Most internal functions of the 8088 are identical to the equivalent 8086 functions. The 8088 handles the external bus the same way the 8086 does with the distinction of handling only 8 bits at a time. Sixteen-bit operands are fetched or written in two consecutive bus cycles. Both processors will appear identical to the software engineer, with the exception of execution time. The internal register structure is identical and all instructions have the same end result. The differences between the 8088 and 8086 are outlined below. The engineer who is unfamiliar with the 8086 is referred to the iAPX 86, 88 User's Manual, Chapters 2 and 4, for function description and instruction set information. Internally, there are three differences between the 8088 and the 8086. All changes are related to the 8-bit bus interface.

- The queue length is 4 bytes in the 8088, whereas the 8086 queue contains 6 bytes, or three words. The queue was shortened to prevent overuse of the bus by the BIU when prefetching instructions. This was required because of the additional time necessary to fetch instructions 8 bits at a time.
- To further optimize the queue, the prefetching algorithm was changed. The 8088 BIU will fetch a new instruction to load into the queue each time there is a 1 byte hole (space available) in the queue. The 8086 waits until a 2-byte space is available.
- The internal execution time of the instruction set is affected by the 8-bit interface. All 16-bit fetches and writes from/to memory take an additional four clock cycles. The CPU is also limited by the speed of instruction fetches. This latter problem only occurs when a series of simple operations occur. When the more sophisticated instructions of the 8088 are being used, the queue has time to fill and the execution proceeds as fast as the execution unit will allow.

The 8088 and 8086 are completely software compatible by virture of their identical execution units. Software that is system dependent may not be completely transferable, but software that is not system dependent will operate equally as well on an 8088 or an 8086.

The hardware interface of the 8088 contains the major differences between the two CPUs. The pin assignments are nearly identical, however, with the following functional changes:

- A8–A15 — These pins are only address outputs on the 8088. These address lines are latched internally and remain valid throughout a bus cycle in a manner similar to the 8085 upper address lines.
- $\overline{BHE}$ has no meaning on the 8088 and has been eliminated.
- $\overline{SSO}$ provides the $\overline{SO}$ status information in the minimum mode. This output occurs on pin 34 in minimum mode only. DT/$\overline{R}$, IO/$\overline{M}$, and $\overline{SSO}$ provide the complete bus status in minimum mode.
- IO/$\overline{M}$ has been inverted to be compatible with the MCS-85 bus structure.
- ALE is delayed by one clock cycle in the minimum mode when entering HALT, to allow the status to be latched with ALE.

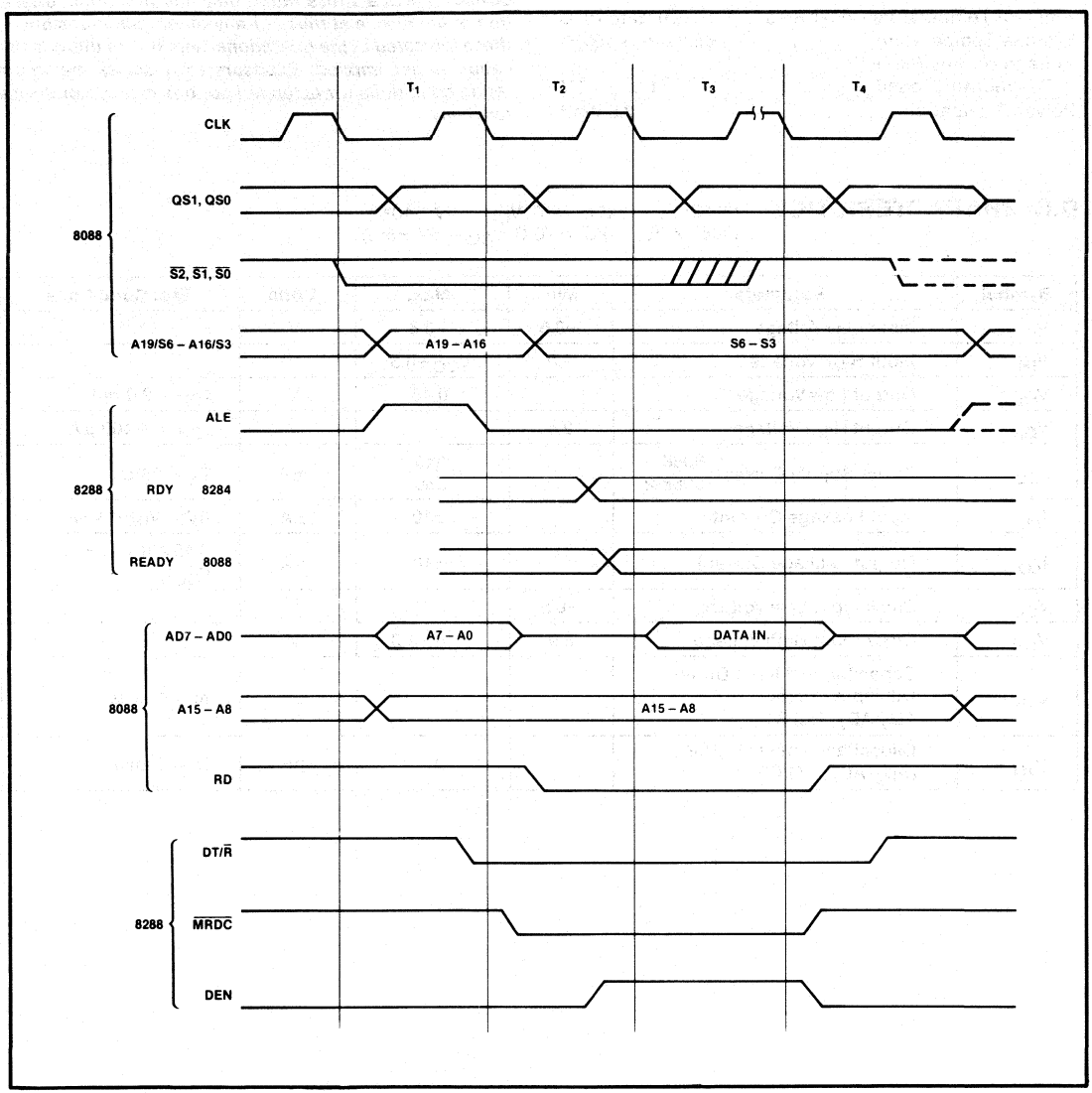

Figure 10. Medium Complexity System Timing

ABSOLUTE MAXIMUM RATINGS*

Ambient Temperature Under Bias . . . . . 0°C to 70°C
Storage Temperature . . . . . −65°C to +150°C
Voltage on Any Pin with
Respect to Ground . . . . . −1.0 to +7V
Power Dissipation . . . . . 2.5 Watt

NOTICE: Stresses above those listed under "Absolute Maximum Ratings" may cause permanent damage to the device. This is a stress rating only and functional operation of the device at these or any other conditions above those indicated in the operational sections of this specification is not implied. Exposure to absolute maximum rating conditions for extended periods may affect device reliability.

D.C. CHARACTERISTICS

(8088: T_A = 0°C to 70°C, V_{CC} = 5V ±10%)
(8088-2: T_A = 0°C to 70°C, V_{CC} = 5V ±5%)

Symbol	Parameter	Min.	Max.	Units	Test Conditions
V_{IL}	Input Low Voltage	−0.5	+0.8	V	
V_{IH}	Input High Voltage	2.0	V_{CC}+0.5	V	
V_{OL}	Output Low Voltage		0.45	V	I_{OL} = 2.0 mA
V_{OH}	Output High Voltage	2.4		V	I_{OH} = −400 μA
I_{CC}	Power Supply Current: 8088 8088-2		340 350	mA	T_A = 25°C
I_{LI}	Input Leakage Current		±10	μA	0V ≤ V_{IN} ≤ V_{CC}
I_{LO}	Output Leakage Current		±10	μA	0.45V ≤ V_{OUT} ≤ V_{CC}
V_{CL}	Clock Input Low Voltage	−0.5	+0.6	V	
V_{CH}	Clock Input High Voltage	3.9	V_{CC}+1.0	V	
C_{IN}	Capacitance if Input Buffer (All input except AD_0-AD_7, RQ/GT		15	pF	fc = 1 MHz
C_{IO}	Capacitance of I/O Buffer (AD_0-AD_7, RQ/GT		15	pF	fc = 1 MHz

A.C. CHARACTERISTICS (8088: T_A = 0°C to 70°C, V_{CC} = 5V ±10%) (8088-2: T_A = 0°C to 70°C, V_{CC} = 5V ±5%)

MINIMUM COMPLEXITY SYSTEM TIMING REQUIREMENTS

		8088		8088-2			
Symbol	**Parameter**	**Min.**	**Max.**	**Min.**	**Max.**	**Units**	**Test Conditions**
TCLCL	CLK Cycle Period	200	500	125	500	ns	
TCLCH	CLK Low Time	(⅔ TCLCL)−15		(⅔ TCLCL)−15		ns	
TCHCL	CLK High Time	(⅓ TCLCL)+2		(⅓ TCLCL)+2		ns	
TCH1CH2	CLK Rise Time		10		10	ns	From 1.0V to 3.5V
TCL2CL1	CLK Fall Time		10		10	ns	From 3.5V to 1.0V
TDVCL	Data in Setup Time	30		20		ns	
TCLDX	Data in Hold Time	10		10		ns	
TR1VCL	RDY Setup Time into 8284 (See Notes 1, 2)	35		35		ns	
TCLR1X	RDY Hold Time into 8284 (See Notes 1, 2)	0		0		ns	
TRYHCH	READY Setup Time into 8088	(⅔ TCLCL)−15		(⅔ TCLCL)−15		ns	
TCHRYX	READY Hold Time into 8088	30		20		ns	
TRYLCL	READY Inactive to CLK (See Note 3)	−8		−8		ns	
THVCH	HOLD Setup Time	35		20		ns	
TINVCH	INTR, NMI, $\overline{\text{TEST}}$ Setup Time (See Note 2)	30		15		ns	
TILIH	Input Rise Time (Except CLK)		20		20	ns	From 0.8V to 2.0V
TIHIL	Input Fall Time (Except CLK)		12		12	ns	From 2.0V to 0.8V

A.C. CHARACTERISTICS (Continued)

TIMING RESPONSES

		8088		8088-2			
Symbol	**Parameter**	**Min.**	**Max.**	**Min.**	**Max.**	**Units**	**Test Conditions**
TCLAV	Address Valid Delay	10	110	10	60	ns	C_L = 20-100 pF for all 8088 Outputs in addition to internal loads
TCLAX	Address Hold Time	10		10		ns	
TCLAZ	Address Float Delay	TCLAX	80	TCLAX	50	ns	
TLHLL	ALE Width	TCLCH−20		TCLCH−10		ns	
TCLLH	ALE Active Delay		80		50	ns	
TCHLL	ALE Inactive Delay		85		55	ns	
TLLAX	Address Hold Time to ALE Inactive	TCHCL−10		TCHCL−10		ns	
TCLDV	Data Valid Delay	10	110	10	60	ns	
TCHDX	Data Hold Time	10		10		ns	
TWHDX	Data Hold Time After $\overline{WR}$	TCLCH−30		TCLCH−30		ns	
TCVCTV	Control Active Delay 1	10	110	10	70	ns	
TCHCTV	Control Active Delay 2	10	110	10	60	ns	
TCVCTX	Control Inactive Delay	10	110	10	70	ns	
TAZRL	Address Float to READ Active	0		0		ns	
TCLRL	$\overline{RD}$ Active Delay	10	165	10	100	ns	
TCLRH	$\overline{RD}$ Inactive Delay	10	150	10	80	ns	
TRHAV	$\overline{RD}$ Inactive to Next Address Active	TCLCL−45		TCLCL−40		ns	
TCLHAV	HLDA Valid Delay	10	160	10	100	ns	
TRLRH	$\overline{RD}$ Width	2TCLCL−75		2TCLCL−50		ns	
TWLWH	$\overline{WR}$ Width	2TCLCL−60		2TCLCL−40		ns	
TAVAL	Address Valid to ALE Low	TCLCH−60		TCLCH−40		ns	
TOLOH	Output Rise Time		20		20	ns	From 0.8V to 2.0V
TOHOL	Output Fall Time		12		12	ns	From 2.0V to 0.8V

A.C. TESTING INPUT, OUTPUT WAVEFORM

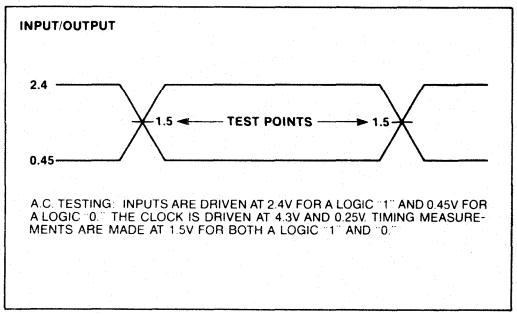

A.C. TESTING: INPUTS ARE DRIVEN AT 2.4V FOR A LOGIC "1" AND 0.45V FOR A LOGIC "0." THE CLOCK IS DRIVEN AT 4.3V AND 0.25V. TIMING MEASUREMENTS ARE MADE AT 1.5V FOR BOTH A LOGIC "1" AND "0."

A.C. TESTING LOAD CIRCUIT

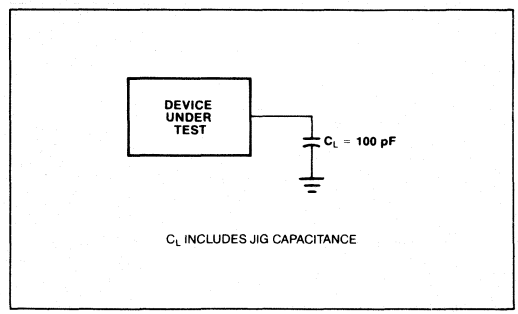

C_L INCLUDES JIG CAPACITANCE

WAVEFORMS

BUS TIMING—MINIMUM MODE SYSTEM

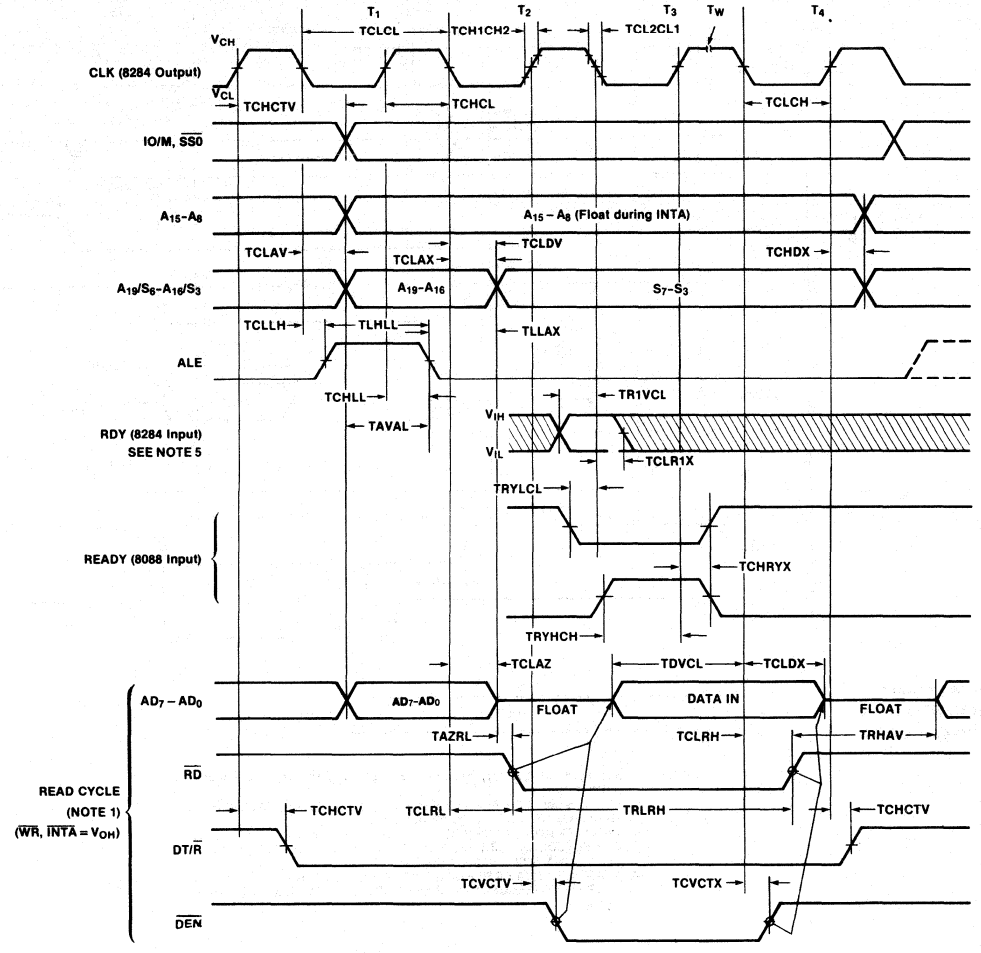

WAVEFORMS (Continued)

BUS TIMING—MINIMUM MODE SYSTEM (Continued)

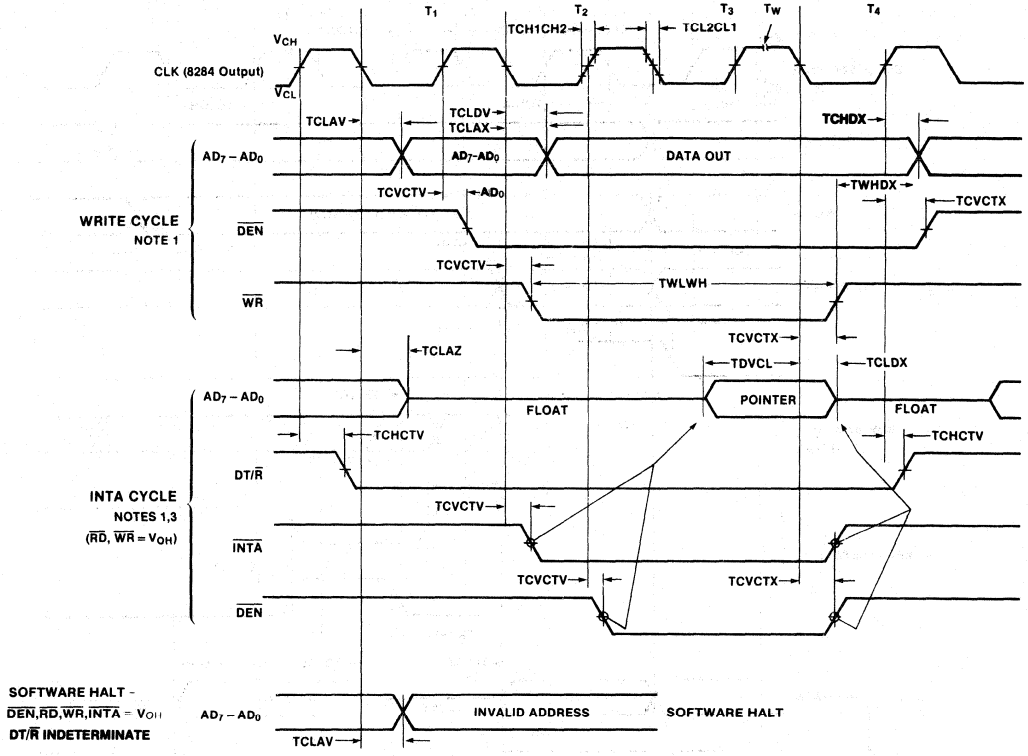

NOTES:
1. ALL SIGNALS SWITCH BETWEEN V_{OH} AND V_{OL} UNLESS OTHERWISE SPECIFIED.
2. RDY IS SAMPLED NEAR THE END OF T_2, T_3, T_W TO DETERMINE IF T_W MACHINES STATES ARE TO BE INSERTED.
3. TWO INTA CYCLES RUN BACK-TO-BACK. THE 8088 LOCAL ADDR/DATA BUS IS FLOATING DURING BOTH INTA CYCLES. CONTROL SIGNALS ARE SHOWN FOR THE SECOND INTA CYCLE.
4. SIGNALS AT 8284 ARE SHOWN FOR REFERENCE ONLY.
5. ALL TIMING MEASUREMENTS ARE MADE AT 1.5V UNLESS OTHERWISE NOTED.

A.C. CHARACTERISTICS

MAX MODE SYSTEM (USING 8288 BUS CONTROLLER)

TIMING REQUIREMENTS

		8088		8088-2			
Symbol	**Parameter**	**Min.**	**Max.**	**Min.**	**Max.**	**Units**	**Test Conditions**
TCLCL	CLK Cycle Period	200	500	125	500	ns	
TCLCH	CLK Low Time	(⅔ TCLCL)−15		(⅔ TCLCL)−15		ns	
TCHCL	CLK High Time	(⅓ TCLCL)+2		(⅓ TCLCL)+2		ns	
TCH1CH2	CLK Rise Time		10		10	ns	From 1.0V to 3.5V
TCL2CL1	CLK Fall Time		10		10	ns	From 3.5V to 1.0V
TDVCL	Data In Setup Time	30		20		ns	
TCLDX	Data In Hold Time	10		10		ns	
TR1VCL	RDY Setup Time into 8284 (See Notes 1, 2)	35		35		ns	
TCLR1X	RDY Hold Time into 8284 (See Notes 1, 2)	0		0		ns	
TRYHCH	READY Setup Time into 8088	(⅔ TCLCL)−15		(⅔ TCLCL)−15		ns	
TCHRYX	READY Hold Time into 8088	30		20		ns	
TRYLCL	READY Inactive to CLK (See Note 4)	−8		−8		ns	
TINVCH	Setup Time for Recognition (INTR, NMI, TEST) (See Note 2)	30		15		ns	
TGVCH	RQ/GT Setup Time	30		15		ns	
TCHGX	RQ Hold Time into 8086	40		30		ns	
TILIH	Input Rise Time (Except CLK)		20		20	ns	From 0.8V to 2.0V
TIHIL	Input Fall Time (Except CLK)		12		12	ns	From 2.0V to 0.8V

NOTES:
1. Signal at 8284 or 8288 shown for reference only.
2. Setup requirement for asynchronous signal only to guarantee recognition at next CLK.
3. Applies only to T2 state (8 ns into T3 state).
4. Applies only to T2 state (8 ns into T3 state).

A.C. CHARACTERISTICS

TIMING RESPONSES

		8088		8088-2			
Symbol	**Parameter**	**Min.**	**Max.**	**Min.**	**Max.**	**Units**	**Test Conditions**
TCLML	Command Active Delay (See Note 1)	10	35	10	35	ns	
TCLMH	Command Inactive Delay (See Note 1)	10	35	10	35	ns	
TRYHSH	READY Active to Status Passive (See Note 3)		110		65	ns	
TCHSV	Status Active Delay	10	110	10	60	ns	
TCLSH	Status Inactive Delay	10	130	10	70	ns	
TCLAV	Address Valid Delay	10	110	10	60	ns	
TCLAX	Address Hold Time	10		10		ns	
TCLAZ	Address Float Delay	TCLAX	80	TCLAX	50	ns	
TSVLH	Status Valid to ALE High (See Note 1)		15		15	ns	
TSVMCH	Status Valid to MCE High (See Note 1)		15		15	ns	
TCLLH	CLK Low to ALE Valid (See Note 1)		15		15	ns	
TCLMCH	CLK Low to MCE High (See Note 1)		15		15	ns	
TCHLL	ALE Inactive Delay (See Note 1)		15		15	ns	
TCLMCL	MCE Inactive Delay (See Note 1)		15		15	ns	C_L = 20-100 pF for all 8088 Outputs in addition to internal loads
TCLDV	Data Valid Delay	10	110	10	60	ns	
TCHDX	Data Hold Time	10		10		ns	
TCVNV	Control Active Delay (See Note 1)	5	45	5	45	ns	
TCVNX	Control Inactive Delay (See Note 1)	10	45	10	45	ns	
TAZRL	Address Float to Read Active	0		0		ns	
TCLRL	RD Active Delay	10	165	10	100	ns	
TCLRH	RD Inactive Delay	10	150	10	80	ns	
TRHAV	RD Inactive to Next Address Active	TCLCL−45		TCLCL−40		ns	
TCHDTL	Direction Control Active Delay (See Note 1)		50		50	ns	
TCHDTH	Direction Control Inactive Delay (See Note 1)		30		30	ns	
TCLGL	GT Active Delay		110		50	ns	
TCLGH	GT Inactive Delay		85		50	ns	
TRLRH	RD Width	2TCLCL−75		2TCLCL−50		ns	
TOLOH	Output Rise Time		20		20	ns	From 0.8V to 2.0V
TOHOL	Output Fall Time		12		12	ns	From 2.0V to 0.8V

WAVEFORMS

BUS TIMING—MAXIMUM MODE

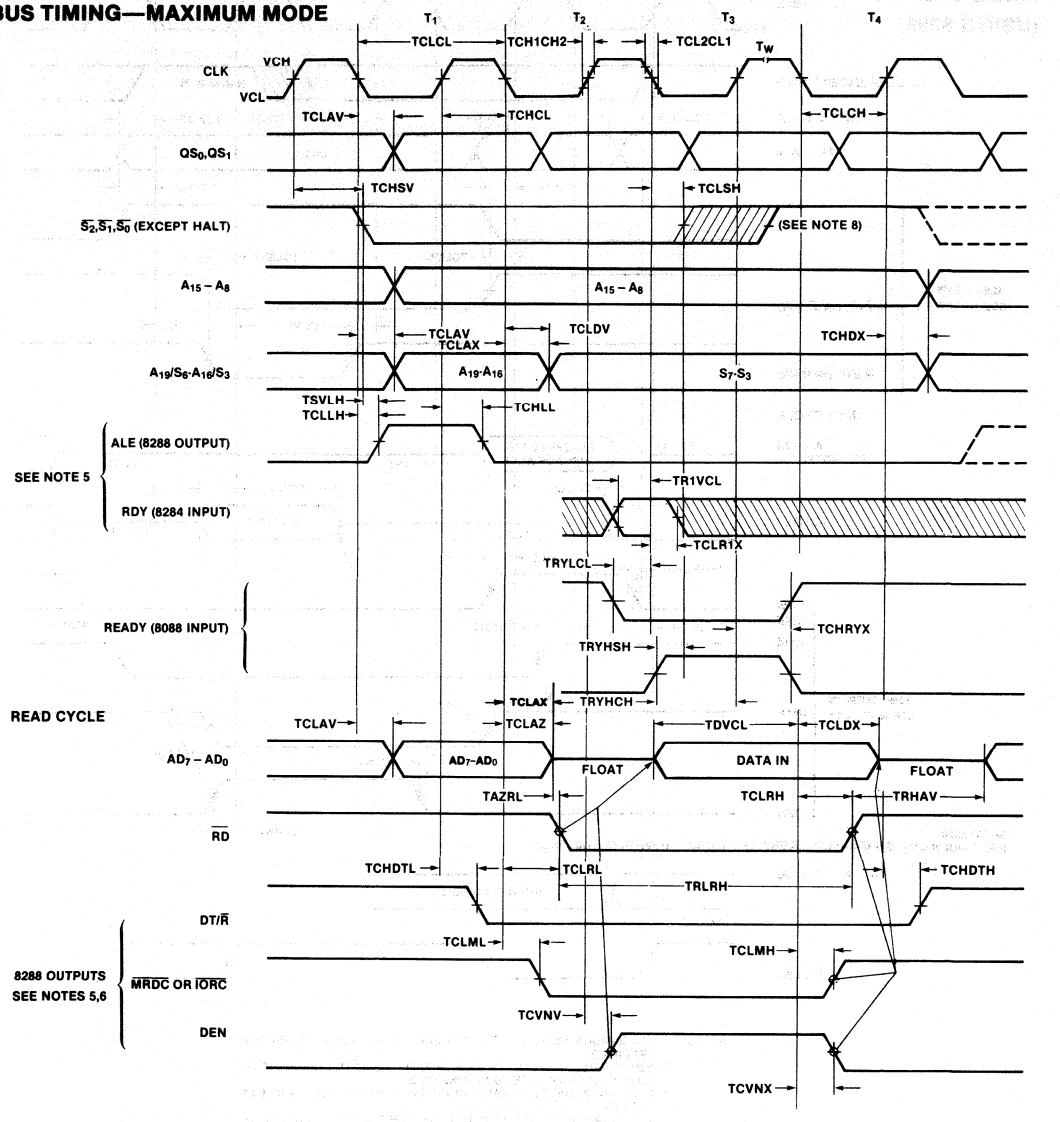

WAVEFORMS (Continued)

BUS TIMING—MAXIMUM MODE SYSTEM (USING 8288)

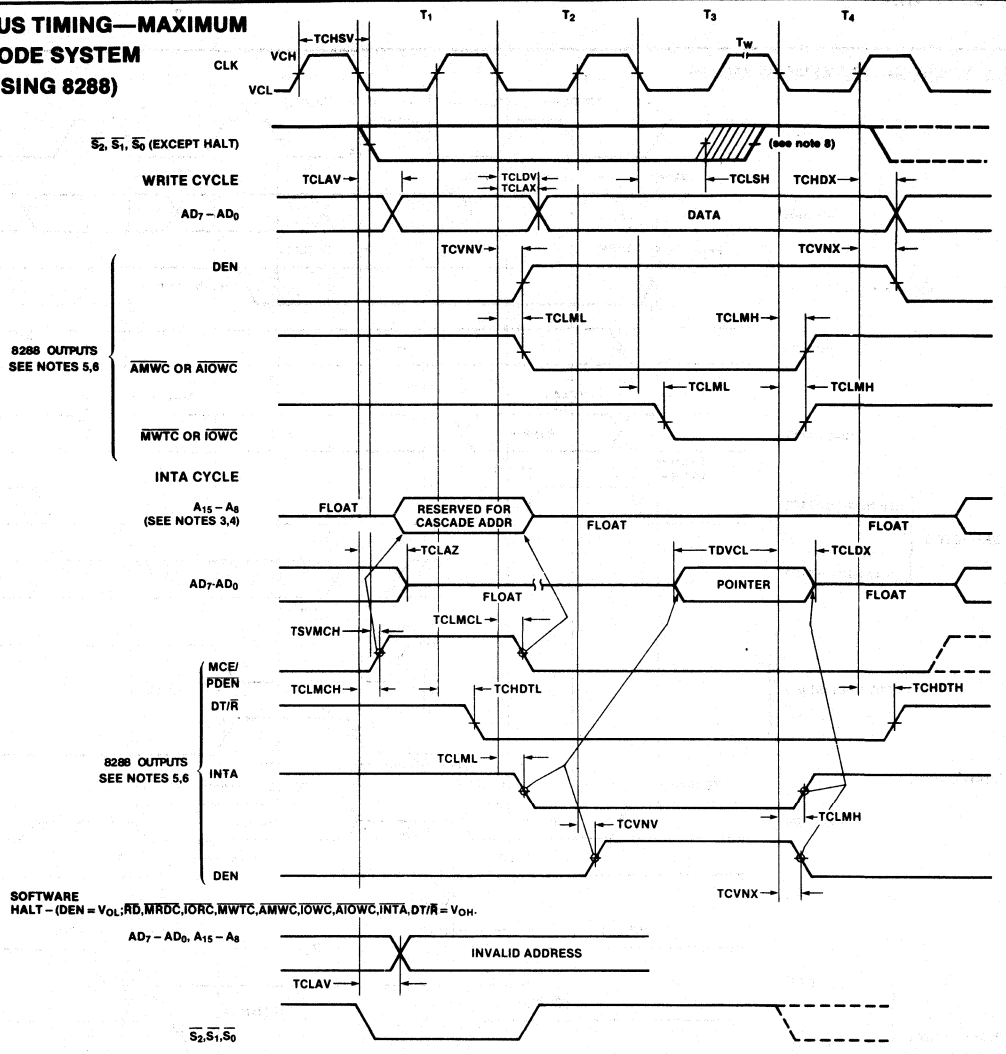

NOTES:
1. ALL SIGNALS SWITCH BETWEEN V_{OH} AND V_{OL} UNLESS OTHERWISE SPECIFIED.
2. RDY IS SAMPLED NEAR THE END OF T_2, T_3, T_W TO DETERMINE IF T_W MACHINES STATES ARE TO BE INSERTED.
3. CASCADE ADDRESS IS VALID BETWEEN FIRST AND SECOND INTA CYCLES.
4. TWO INTA CYCLES RUN BACK-TO-BACK. THE 8086 LOCAL ADDR/DATA BUS IS FLOATING DURING BOTH INTA CYCLES. CONTROL FOR POINTER ADDRESS IS SHOWN FOR SECOND INTA CYCLE.
5. SIGNALS AT 8284 OR 8288 ARE SHOWN FOR REFERENCE ONLY.
6. THE ISSUANCE OF THE 8288 COMMAND AND CONTROL SIGNALS (MRDC, MWTC, AMWC, IORC, IOWC, AIOWC, INTA AND DEN) LAGS THE ACTIVE HIGH 8288 CEN.
7. ALL TIMING MEASUREMENTS ARE MADE AT 1.5V UNLESS OTHERWISE NOTED.
8. STATUS INACTIVE IN STATE JUST PRIOR TO T_4.

WAVEFORMS (Continued)

ASYNCHRONOUS SIGNAL RECOGNITION

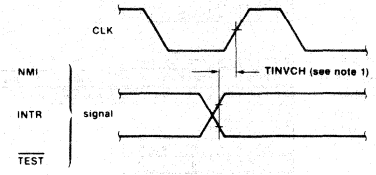

NOTE: 1. SETUP REQUIREMENTS FOR ASYNCHRONOUS SIGNALS ONLY TO GUARANTEE RECOGNITION AT NEXT CLK

BUS LOCK SIGNAL TIMING (MAXIMUM MODE ONLY)

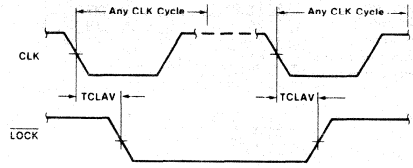

REQUEST/GRANT SEQUENCE TIMING (MAXIMUM MODE ONLY)

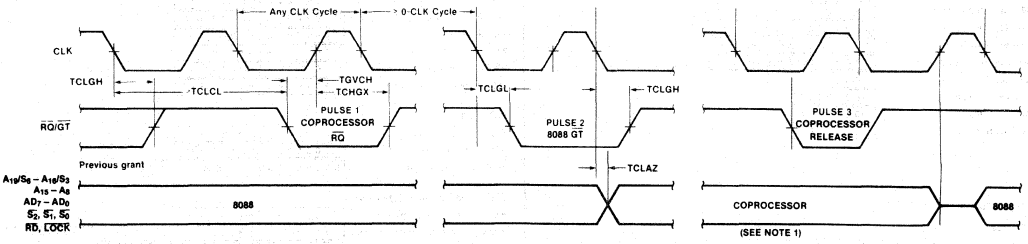

NOTE: 1. THE COPROCESSOR MAY NOT DRIVE THE BUSSES OUTSIDE THE REGION SHOWN WITHOUT RISKING CONTENTION.

HOLD/HOLD ACKNOWLEDGE TIMING (MINIMUM MODE ONLY)

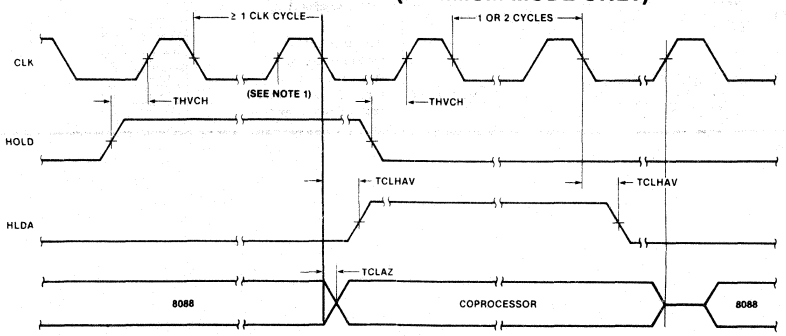

iAPX 86/10, 88/10
INSTRUCTION SET SUMMARY

DATA TRANSFER

MOV = Move:	76543210	76543210	76543210	76543210
Register/memory to/from register	100010dw	mod reg r/m		
Immediate to register/memory	1100011w	mod 000 r/m	data	data if w 1
Immediate to register	1011w reg	data	data if w 1	
Memory to accumulator	1010000w	addr-low	addr-high	
Accumulator to memory	1010001w	addr-low	addr-high	
Register/memory to segment register	10001110	mod 0 reg r/m		
Segment register to register/memory	10001100	mod 0 reg r/m		

PUSH = Push:		
Register/memory	11111111	mod 110 r/m
Register	01010 reg	
Segment register	000 reg 110	

POP = Pop:		
Register/memory	10001111	mod 000 r/m
Register	01011 reg	
Segment register	000 reg 111	

XCHG = Exchange:		
Register/memory with register	1000011w	mod reg r/m
Register with accumulator	10010 reg	

IN=Input from:		
Fixed port	1110010w	port
Variable port	1110110w	

OUT = Output to:		
Fixed port	1110011w	port
Variable port	1110111w	

XLAT=Translate byte to AL	11010111	
LEA=Load EA to register	10001101	mod reg r/m
LDS=Load pointer to DS	11000101	mod reg r/m
LES=Load pointer to ES	11000100	mod reg r/m
LAHF=Load AH with flags	10011111	
SAHF=Store AH into flags	10011110	
PUSHF=Push flags	10011100	
POPF=Pop flags	10011101	

ARITHMETIC

ADD = Add:				
Reg /memory with register to either	000000dw	mod reg r/m		
Immediate to register/memory	100000sw	mod 000 r/m	data	data if s w 01
Immediate to accumulator	0000010w	data	data if w 1	

ADC = Add with carry:				
Reg /memory with register to either	000100dw	mod reg r/m		
Immediate to register/memory	100000sw	mod 010 r/m	data	data if s w 01
Immediate to accumulator	0001010w	data	data if w 1	

INC = Increment:		
Register/memory	1111111w	mod 000 r/m
Register	01000 reg	
AAA=ASCII adjust for add	00110111	
DAA=Decimal adjust for add	00100111	

SUB = Subtract:				
Reg /memory and register to either	001010dw	mod reg r/m		
Immediate from register/memory	100000sw	mod 101 r/m	data	data if s w 01
Immediate from accumulator	0010110w	data	data if w 1	

SBB = Subtract with borrow				
Reg /memory and register to either	000110dw	mod reg r/m		
Immediate from register/memory	100000sw	mod 011 r/m	* data	data if s w 01
Immediate from accumulator	0001110w	data	data if w 1	

DEC Decrement:	76543210	76543210	76543210	76543210
Register/memory	1111111w	mod 001 r/m		
Register	01001 reg			
NEG Change sign	1111011w	mod 011 r/m		

CMP Compare:				
Register/memory and register	001110dw	mod reg r/m		
Immediate with register/memory	100000sw	mod 111 r/m	data	data if s w 01
Immediate with accumulator	0011110w	data	data if w 1	
AAS ASCII adjust for subtract	00111111			
DAS Decimal adjust for subtract	00101111			
MUL Multiply (unsigned)	1111011w	mod 100 r/m		
IMUL Integer multiply (signed)	1111011w	mod 101 r/m		
AAM ASCII adjust for multiply	11010100	00001010		
DIV Divide (unsigned)	1111011w	mod 110 r/m		
IDIV Integer divide (signed)	1111011w	mod 111 r/m		
AAD ASCII adjust for divide	11010101	00001010		
CBW Convert byte to word	10011000			
CWD Convert word to double word	10011001			

LOGIC

NOT Invert	1111011w	mod 010 r/m		
SHL/SAL Shift logical/arithmetic left	110100vw	mod 100 r/m		
SHR Shift logical right	110100vw	mod 101 r/m		
SAR Shift arithmetic right	110100vw	mod 111 r/m		
ROL Rotate left	110100vw	mod 000 r/m		
ROR Rotate right	110100vw	mod 001 r/m		
RCL Rotate through carry flag left	110100vw	mod 010 r/m		
RCR Rotate through carry right	110100vw	mod 011 r/m		

AND And:				
Reg /memory and register to either	001000dw	mod reg r/m		
Immediate to register/memory	1000000w	mod 100 r/m	data	data if w 1
Immediate to accumulator	0010010w	data	data if w 1	

TEST And function to flags, no result:				
Register/memory and register	1000010w	mod reg r/m		
Immediate data and register/memory	1111011w	mod 000 r/m	data	data if w 1
Immediate data and accumulator	1010100w	data	data if w 1	

OR Or:				
Reg /memory and register to either	000010dw	mod reg r/m		
Immediate to register/memory	1000000w	mod 001 r/m	data	data if w 1
Immediate to accumulator	0000110w	data	data if w 1	

XOR Exclusive or:				
Reg /memory and register to either	001100dw	mod reg r/m		
Immediate to register/memory	1000000w	mod 110 r/m	data	data if w 1
Immediate to accumulator	0011010w	data	data if w 1	

STRING MANIPULATION

REP=Repeat	1111001z
MOVS=Move byte/word	1010010w
CMPS=Compare byte/word	1010011w
SCAS=Scan byte/word	1010111w
LODS=Load byte/wd to AL/AX	1010110w
STOS=Stor byte/wd from AL/A	1010101w

Mnemonics ©Intel, 1978

INSTRUCTION SET SUMMARY (Continued)

CONTROL TRANSFER

CALL = Call:	76543210	76543210	76543210
Direct within segment	11101000	disp-low	disp-high
Indirect within segment	11111111	mod 010 r/m	
Direct intersegment	10011010	offset-low	offset-high
		seg-low	seg-high
Indirect intersegment	11111111	mod 011 r/m	
JMP = Unconditional Jump:			
Direct within segment	11101001	disp-low	disp-high
Direct within segment-short	11101011	disp	
Indirect within segment	11111111	mod 100 r/m	
Direct intersegment	11101010	offset-low	offset-high
		seg-low	seg-high
Indirect intersegment	11111111	mod 101 r/m	
RET = Return from CALL:			
Within segment	11000011		
Within seg. adding immed to SP	11000010	data-low	data-high
Intersegment	11001011		
Intersegment, adding immediate to SP	11001010	data-low	data-high
JE/JZ=Jump on equal/zero	01110100	disp	
JL/JNGE=Jump on less/not greater or equal	01111100	disp	
JLE/JNG=Jump on less or equal/not greater	01111110	disp	
JB/JNAE=Jump on below/not above or equal	01110010	disp	
JBE/JNA=Jump on below or equal/not above	01110110	disp	
JP/JPE=Jump on parity/parity even	01111010	disp	
JO=Jump on overflow	01110000	disp	
JS=Jump on sign	01111000	disp	
JNE/JNZ=Jump on not equal/not zero	01110101	disp	
JNL/JGE=Jump on not less/greater or equal	01111101	disp	
JNLE/JG=Jump on not less or equal/greater	01111111	disp	

	76543210	76543210
JNB/JAE Jump on not below/above or equal	01110011	disp
JNBE/JA Jump on not below or equal/above	01110111	disp
JNP/JPO Jump on not par/par odd	01111011	disp
JNO Jump on not overflow	01110001	disp
JNS Jump on not sign	01111001	disp
LOOP Loop CX times	11100010	disp
LOOPZ/LOOPE Loop while zero/equal	11100001	disp
LOOPNZ/LOOPNE Loop while not zero/equal	11100000	disp
JCXZ Jump on CX zero	11100011	disp

INT Interrupt

Type specified	11001101	type
Type 3	11001100	
INTO Interrupt on overflow	11001110	
IRET Interrupt return	11001111	

PROCESSOR CONTROL

CLC Clear carry	11111000	
CMC Complement carry	11110101	
STC Set carry	11111001	
CLD Clear direction	11111100	
STD Set direction	11111101	
CLI Clear interrupt	11111010	
STI Set interrupt	11111011	
HLT Halt	11110100	
WAIT Wait	10011011	
ESC Escape (to external device)	11011xxx	mod x x x r/m
LOCK Bus lock prefix	11110000	

Footnotes:

AL = 8-bit accumulator
AX = 16-bit accumulator
CX = Count register
DS = Data segment
ES = Extra segment
Above/below refers to unsigned value.
Greater = more positive;
Less = less positive (more negative) signed values
if d = 1 then "to" reg; if d = 0 then "from" reg
if w = 1 then word instruction; if w = 0 then byte instruction

if mod = 11 then r/m is treated as a REG field
if mod = 00 then DISP = 0*, disp-low and disp-high are absent
if mod = 01 then DISP = disp-low sign-extended to 16-bits, disp-high is absent
if mod = 10 then DISP = disp-high: disp-low
if r/m = 000 then EA = (BX) + (SI) + DISP
if r/m = 001 then EA = (BX) + (DI) + DISP
if r/m = 010 then EA = (BP) + (SI) + DISP
if r/m = 011 then EA = (BP) + (DI) + DISP
if r/m = 100 then EA = (SI) + DISP
if r/m = 101 then EA = (DI) + DISP
if r/m = 110 then EA = (BP) + DISP*
if r/m = 111 then EA = (BX) + DISP
DISP follows 2nd byte of instruction (before data if required)

*except if mod = 00 and r/m = 110 then EA = disp-high: disp-low.

if s:w = 01 then 16 bits of immediate data form the operand.
if s:w = 11 then an immediate data byte is sign extended to form the 16-bit operand.
if v = 0 then "count" = 1; if v = 1 then "count" in (CL)
x = don't care
z is used for string primitives for comparison with Z.F FLAG.

SEGMENT OVERRIDE PREFIX

001 reg 110

REG is assigned according to the following table:

16-Bit (w = 1)	8-Bit (w = 0)	Segment
000 AX	000 AL	00 ES
001 CX	001 CL	01 CS
010 DX	010 DL	10 SS
011 BX	011 BL	11 DS
100 SP	100 AH	
101 BP	101 CH	
110 SI	110 DH	
111 DI	111 BH	

Instructions which reference the flag register file as a 16-bit object use the symbol FLAGS to represent the file:

FLAGS = X:X:X:X:(OF):(DF):(IF):(TF):(SF):(ZF):X:(AF):X:(PF):X:(CF)

Mnemonics © Intel, 1978

PRELIMINARY

8089
8 & 16-BIT HMOS I/O PROCESSOR

- **High Speed DMA Capabilities Including I/O to Memory, Memory to I/O, Memory to Memory, and I/O to I/O**
- **iAPX 86, 88 Compatible: Removes I/O Overhead from CPU in iAPX 86/11 or 88/11 Configuration**
- **Allows Mixed Interface of 8- & 16-Bit Peripherals, to 8- & 16-Bit Processor Busses**
- **1 Mbyte Addressability**
- **Memory Based Communication with CPU**
- **Supports LOCAL or REMOTE I/O Processing**
- **Flexible, Intelligent DMA Functions Including Translation, Search, Word Assembly/Disassembly**
- **MULTIBUS™ Compatible System Interface**

The Intel® 8089 is a revolutionary concept in microprocessor input/output processing. Packaged in a 40-pin DIP package, the 8089 is a high performance processor implemented in N-channel, depletion load silicon gate technology (HMOS). The 8089's instruction set and capabilities are optimized for high speed, flexible and efficient I/O handling. It allows easy interface of Intel's 16-bit iAPX 86 and 8-bit iAPX 88 microprocessors with 8- and 16-bit peripherals. In the REMOTE configuration, the 8089 bus is user definable allowing it to be compatible with any 8/16-bit Intel microprocessor, interfacing easily to the Intel multiprocessor system bus standard MULTIBUS™.

The 8089 performs the function of an intelligent DMA controller for the Intel iAPX 86, 88 family and with its processing power, can remove I/O overhead from the iAPX 86 or iAPX 88. It may operate completely in parallel with a CPU, giving dramatically improved performance in I/O intensive applications. The 8089 provides two I/O channels, each supporting a transfer rate up to 1.25 mbyte/sec at the standard clock frequency of 5 MHz. Memory based communication between the IOP and CPU enhances system flexibility and encourages software modularity, yielding more reliable, easier to develop systems.

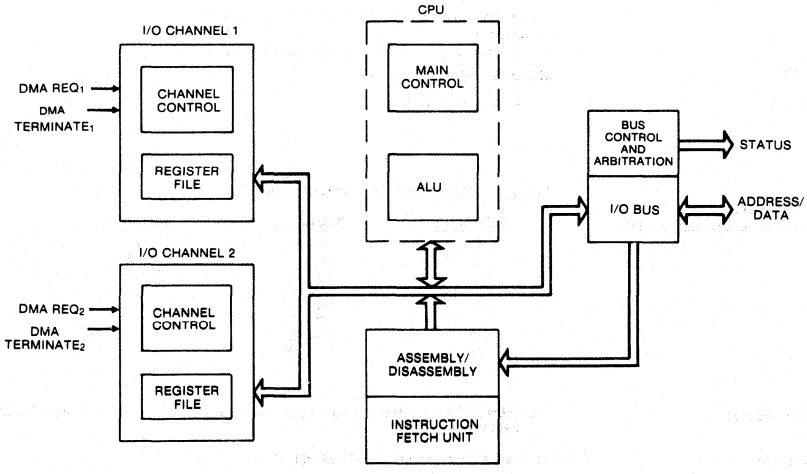

Figure 1. 8089 I/O Processor Block Diagram

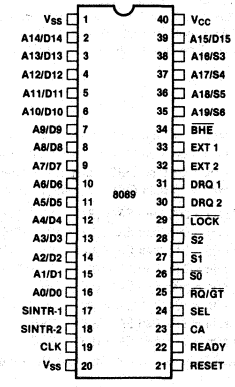

Figure 2. 8089 Pin Configuration

Intel Corporation Assumes No Responsibilty for the Use of Any Circuitry Other Than Circuitry Embodied in an Intel Product. No Other Circuit Patent Licenses are Implied.
©INTEL CORPORATION, 1980

Table 1. Pin Description

Symbol	Type	Name and Function
A0–A15/ D0–D15	I/O	**Multiplexed Address and Data Bus:** The function of these lines are defined by the state of $\overline{S0}$, $\overline{S1}$ and $\overline{S2}$ lines. The pins are floated after reset and when the bus is not acquired. A8–A15 are stable on transfers to a physical 8-bit data bus (same bus as 8088), and are multiplexed with data on transfers to a 16-bit physical bus.
A16–A19/ S3–S6	O	**Address and Status:** Multiplexed most significant address lines and status information. The address lines are active only when addressing memory. Otherwise, the status lines are active and are encoded as shown below. The pins are floated after reset and when the bus is not acquired. **S6 S5 S4 S3** 1 1 0 0 DMA cycle on CH1 1 1 0 1 DMA cycle on CH2 1 1 1 0 Non-DMA cycle on CH1 1 1 1 1 Non-DMA cycle on CH2
$\overline{BHE}$	O	**Bus High Enable:** The Bus High Enable is used to enable data operations on the most significant half of the data bus (D8–D15). The signal is active low when a byte is to be transferred on the upper half of the data bus. The pin is floated after reset and when the bus is not acquired. $\overline{BHE}$ does not have to be latched.
$\overline{S0}$, $\overline{S1}$, $\overline{S2}$	O	**Status:** These are the status pins that define the IOP activity during any given cycle. They are encoded as shown below: $\overline{S2}$ $\overline{S1}$ $\overline{S0}$ 0 0 0 Instruction fetch; I/O space 0 0 1 Data fetch; I/O space 0 1 0 Data store; I/O space 0 1 1 Not used 1 0 0 Instruction fetch; System Memory 1 0 1 Data fetch; System Memory 1 1 0 Data store; System Memroy 1 1 1 Passive The status lines are utilized by the bus controller and bus arbiter to generate all memory and I/O control signals. The signals change during T4 if a new cycle is to be entered while the return to passive state in T3 or T_W indicates the end of a cycle. The pins are floated after system reset and when the bus is not acquired.
READY	I	**Ready:** The ready signal received from the addressed device indicates that the device is ready for data transfer. The signal is active high and is synchronized by the 8284 clock generator.

Symbol	Type	Name and Function
$\overline{LOCK}$	O	**Lock:** The lock output signal indicates to the bus controller that the bus is needed for more than one contiguous cycle. It is set via the channel control register, and during the TSL instruction. The pin floats after reset and when the bus is not acquired. This output is active low.
RESET	I	**Reset:** The receipt of a reset signal causes the IOP to suspend all its activities and enter an idle state until a channel attention is received. The signal must be active for at least four clock cycles.
CLK	I	**Clock:** Clock provides all timing needed for internal IOP operation.
CA	I	**Channel Attention:** Gets the attention of the IOP. Upon the falling edge of this signal, the SEL input pin is examined to determine Master/Slave or CH1/CH2 information. This input is active high.
SEL	I	**Select:** The first CA received after system reset informs the IOP via the SEL line, whether it is a Master or Slave (0/1 for Master/Slave respectively) and starts the initialization sequence. During any other CA the SEL line signifies the selection of CH1/CH2. (0/1 respectively.)
DRQ1–2	I	**Data Request:** DMA request inputs which signal the IOP that a peripheral is ready to transfer/receive data using channels 1 or 2 respectively. The signals must be held active high until the appropriate fetch/stroke is initiated.
$\overline{RQ/GT}$	I/O	**Request Grant:** Request Grant implements the communication dialogue required to arbitrate the use of the system bus (between IOP and CPU, LOCAL mode) or I/O bus when two IOPs share the same bus (REMOTE mode). The $\overline{RQ/GT}$ signal is active low. An internal pull-up permits $\overline{RQ/GT}$ to be left floating if not used.
SINTR1–2	O	**Signal Interrupt:** Signal Interrupt outputs from channels 1 and 2 respectively. The interrupts may be sent directly to the CPU or through the 8295A interrupt controller. They are used to indicate to the system the occurrence of user defined events.
EXT1–2	I	**External Terminate:** External terminate inputs for channels 1 and 2 respectively. The EXT signals will cause the termination of the current DMA transfer operation if the channel is so programmed by the channel control register. The signal must be held active high until termination is complete.
V_{CC}		**Voltage:** +5 volt power input.
V_{SS}		**Ground.**

FUNCTIONAL DESCRIPTION

The 8089 IOP has been designed to remove I/O processing, control and high speed transfers from the central processing unit. Its major capabilities include that of initializing and maintaining peripheral components and supporting versatile DMA. This DMA function boasts flexible termination conditions (such as external terminate, mask compare, single transfer and byte count expired). The DMA function of the 8089 IOP uses a two cycle approach where the information actually flows through the 8089 IOP. This approach to DMA vastly simplifies the bus timings and enhances compatibility with memory and peripherals, in addition to allowing operations to be performed on the data as it is transferred. Operations can include such constructs as translate, where the 8089 automatically vectors through a lookup table and mask compare, both on the "fly".

The 8089 is functionally compatible with Intel's iAPX 86, 88 family. It supports any combination of 8/16-bit busses. In the REMOTE mode it can be used to complement other Intel processor families. Hardware and communication architecture are designed to provide simple mechanisms for system upgrade.

The only direct communication between the IOP and CPU is handled by the Channel Attention and Interrupt lines. Status information, parameters and task programs are passed via blocks of shared memory, simplifying hardware interface and encouraging structured programming.

The 8089 can be used in applications such as file and buffer management in hard disk or floppy disk control. It can also provide for soft error recovery routines and scan control. CRT control, such as cursor control and auto scrolling, is simplified with the 8089. Keyboard control, communication control and general I/O are just a few of the typical applications for the 8089.

Remote and Local Modes

Shown in Figure 3 is the 8089 in a LOCAL configuration. The iAPX 86 (or iAPX 88) is used in its maximum mode. The 8089 and iAPX 86 reside on the same local bus, sharing the same set of system buffers. Peripherals located on the system bus can be addressed by either the iAPX 86 or the 8089. The 8089 requests the use of the LOCAL bus by means of the RQ/GT line. This performs a similar function to that of HOLD and HLDA on the Intel 8085A, 8080A and iAPX 86 minimum mode, but is implemented on one physical line. When the iAPX 86 relinquishes the system bus, the 8089 uses the same bus control, latches and transceiver components to generate the system address, control and data lines. This mode allows a more economical system configuration at the expense of reduced CPU thruput due to IOP bus utilization.

A typical REMOTE configuration is shown in Figure 4. In this mode, the IOP's bus is physically separated from the system bus by means of system buffers/latches. The IOP maintains its own local bus and can operate out of local or system memory. The system bus interface contains the following components:

- Up to three 8282 buffer/latches to latch the address to the system bus.
- Up to two 8286 devices bidirectionally buffer the system data bus.

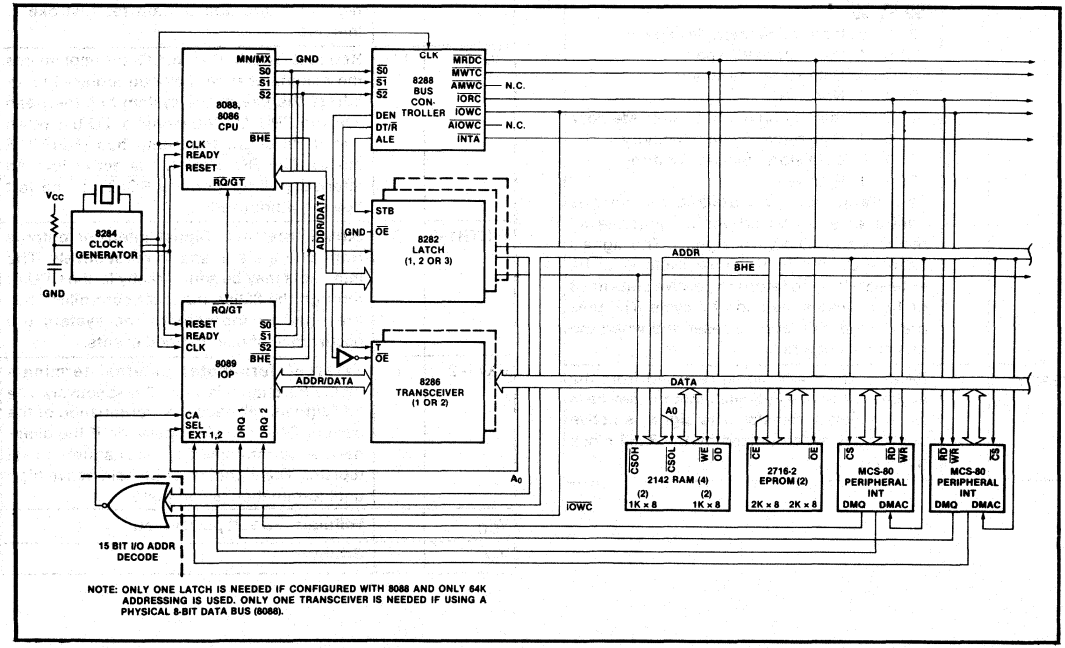

Figure 3. Typical iAPX 86/11, 88/11 Configuration with 8089 in LOCAL Mode, 8088, 8086 in MAX Mode

- An 8288 bus controller supplies the control signals necessary for buffer operation as well as MRDC (Memory Read) and MWTC (Memory Write) signals.
- An 8289 bus arbiter performs all the functions necessary to arbitrate the use of the system bus. This is used in place of the $\overline{RQ}/\overline{GT}$ logic in the LOCAL mode. This arbiter decodes type of cycle information from the 8089 status lines to determine if the IOP desires to perform a transfer over the "common" or system bus.

The peripheral devices PER1 and PER2 are supported on their own data and address bus. the 8089 communicates with the peripherals without affecting system bus operation. Optional buffers may be used on the local bus when capacitive loading conditions so dictate. I/O programs and RAM buffers may also reside on the local bus to further reduce system bus utilization.

COMMUNICATION MECHANISM

Fundamentally, communication between the CPU and IOP is performed through messages prepared in shared memory. The CPU can cause the 8089 to execute a program by placing it in the 8089's memory space and/or directing the 8089's attention to it by asserting a hardware Channel Attention (CA) signal to the IOP, activating the proper I/O channel. The SEL Pin indicates to the IOP which channel is being addressed. Communication from the IOP to the processor can be performed in a similar manner via a system interrupt (SINTR 1,2), if the CPU has enabled interrupts for this purpose. Additionally, the 8089 can store messages in memory regarding its status and the status of any peripherals. This communication mechanism is supported by a hierarchial data structure to provide a maximum amount of flexibility of memory use with the added capability of handling multiple IOP's.

Illustrated in Figure 5 is an overview of the communication data structure hierarchy that exists for the 8089 I/O processor. Upon the first CA from RESET, if the IOP is initialized as the BUS MASTER, 5 bytes of information are read into the 8089 starting at location FFFF6 (FFFF6, FFFF8-FFFFB) where the type of system bus (16-bit or 8-bit) and pointers to the system configuration block are obtained. This is the only fixed location the 8089 accesses. The remaining addresses are obtained via the data structure hierarchy. The 8089 determines addresses in the same manner as does the iAPX 86; i.e., a 16-bit relocation pointer is offset left 4 bits and added to the 16-bit address offset, obtaining a 20-bit address. Once these 20-bit addresses are formed, they are stored as such, as all the 8089 address registers are 20 bits long. After the system configuration pointer address is formed, the 8089 IOP accesses the system configuration block.

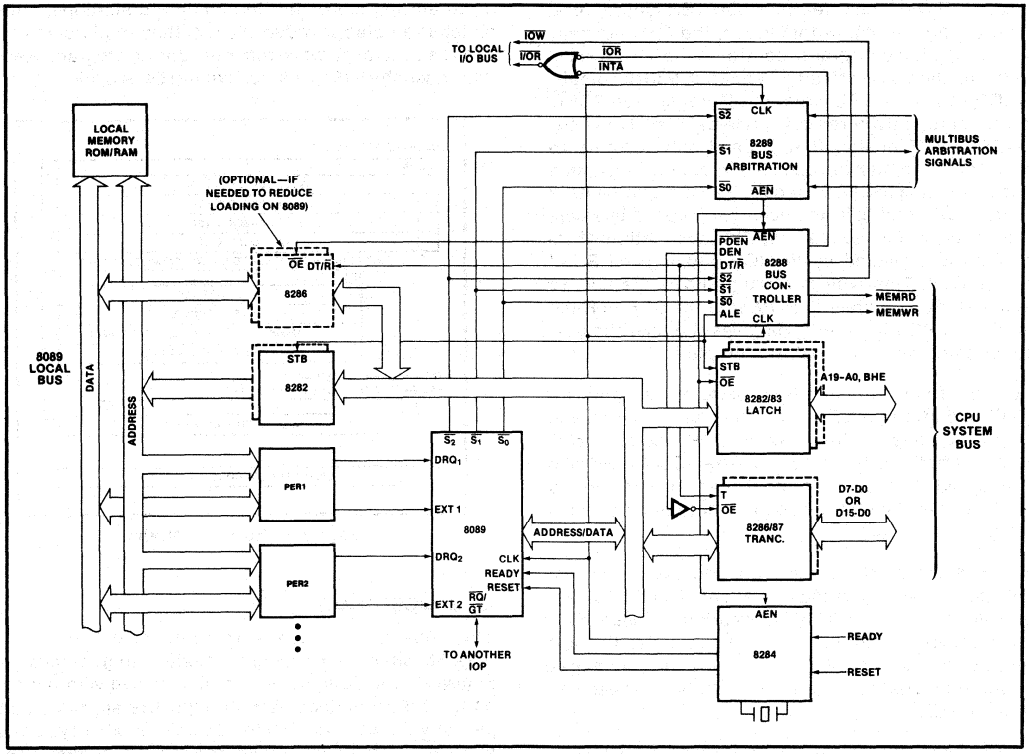

Figure 4. Typical REMOTE Configuration

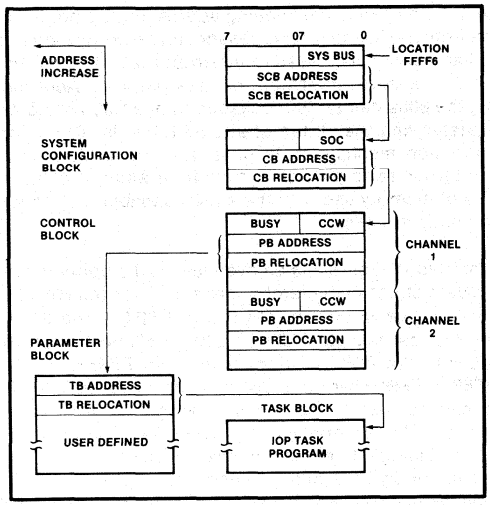

Figure 5. Communication Data Structure Hierarchy

The System Configuration Block (SCB), used only during startup, points to the Control Block (CB) and provides IOP system configuration data via the SOC byte. The SOC byte initializes IOP I/O bus width to 8/16, and defines one of two IOP $\overline{RQ}/\overline{GT}$ operating modes. For $\overline{RQ}/\overline{GT}$ mode 0, the IOP is typically initialized as SLAVE and has its $\overline{RQ}/\overline{GT}$ line tied to a MASTER CPU (typical LOCAL configuration). In this mode, the CPU normally has control of the bus, grants control to the IOP as needed, and has the bus restored to it upon IOP task completion (IOP request—CPU grant—IOP done). For $\overline{RQ}/\overline{GT}$ mode 1, useful only in remote mode between two IOPs, MASTER/SLAVE designation is used only to initialize bus control: from then on, each IOP requests and grants as the bus is needed (IOP1 request—IOP2 grant—IOP2 request—IOP1 grant). Thus, each IOP retains bus control until the other requests it. The completion of initialization is signalled by the IOP clearing the BUSY flag in the CB. This type of startup allows the user to have the startup pointers in ROM with the SCB in RAM. Allowing the SCB to be in RAM gives the user the flexibility of being able to initialize multiple IOPs.

The Control Block furnishes bus control Initialization for the IOP operation (CCW or Channel Control Word) and provides pointers to the Parameter Block or "data" memory for both channels 1 and 2. The CCW is retrieved and analyzed upon all CA's other than the first after a reset. The CCW byte is decoded to determine channel operation.

The Parameter Block contains the address of the Task Block and acts as a messge center between the IOP and CPU. Parameters or variable information is passed from the CPU to its IOP in this block to customize the software interface to the peripheral device. It is also used for transferring data and status information between the IOP and CPU.

The Task Block contains the instructions for the respective channel. This block can reside on the local bus of the IOP, allowing the IOP to operate concurrently with the CPU, or reside in system memory.

The advantage of this type of communication between the processor, IOP and peripheral, is that it allows for a very clean method for the operating system to handle I/O routines. Canned programs or "Task Blocks" allow for execution of general purpose I/O routines with the status and peripheral command information being passed via the Parameter Block ("data" memory). Task Blocks (or "program" memory) can be terminated or restarted by the CPU, if need be. Clearly, the flexibility of this communication lends itself to modularity and applicability to a large number of peripheral devices and upward compatibility to future end user systems and microprocessor families.

Register Set

The 8089 maintains separate registers for its two I/O channels as well as some common registers (see Figure 6). There are sufficient registers for each channel to sustain its own DMA transfers, and process its own instruction stream. The basic DMA pointer registers (GA, GB — 20 bits each), can point to either the system bus or local bus, DMA source or destination, and can be autoincremented. A third register set (GC) can be used to allow translation during the DMA process through a lookup table it points to. Additionally, registers are provided for a masked compare during the data transfer and can be set up to act as one of the termination conditions. Other registers are also provided. Many of these registers can be used as general purpose registers during program execution, when the IOP is not performing DMA cycles.

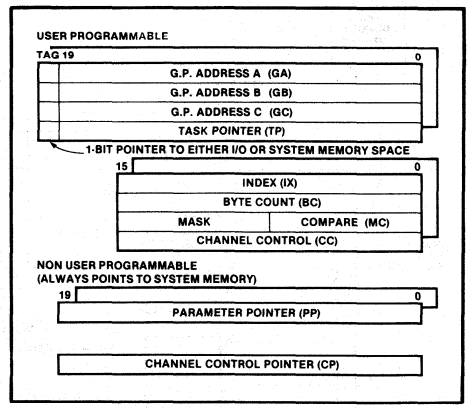

Figure 6. Register Model

Bus Operation

The 8089 utilizes the same bus structure as the iAPX 86, 88 in their maximum mode configurations (see Figure 7). The address is time multiplexed with the data on the first 16/8 lines. A16 through A19 are time multiplexed with four status lines S3-S6. For 8089 cycles, S4 and S3 determine what type of cycle (DMA versus non-DMA) is being performed on channels 1 or 2. S5 and S6

are a unique code assigned to the 8089 IOP, enabling the user to detect which processor is performing a bus cycle in a multiprocessing environment.

The first three status lines, S0-S2, are used with an 8288 bus controller to determine if an instruction fetch or data transfer is being performed in I/O or system memory space.

DMA transfers require at least two bus cycles with each bus cycle requiring a minimum of four clock cycles. Additional clock cycles are added if wait states are required. This two cycle approach simplifies considerably the bus timings in burst DMA. The 8089 optimizes the transfer between two different bus widths by using three bus cycles versus four to transfer 1 word. More than one read (write) is performed when mapping an 8-bit bus onto a 16-bit bus (vice versa). For example, a data transfer from an 8-bit peripheral to a 16-bit physical location in memory is performed by first doing two reads, with word assembly within the IOP assembly register file and then one write.

As can be expected, the data bandwidth of the IOP is a function of the physical bus width of the system and I/O busses. Table 2 gives the bandwidth, latency and bus utilization of the 8089. The system bus is assumed to be 16-bits wide with either an 8-bit peripheral (under byte column) or 16-bit peripheral (word column) being shown.

The latency refers to the worst case response time by the IOP to a DMA request, without the bus arbitration times. Notice that the word transfer allows 50% more bandwidth. This occurs since three bus cycles are required to map 8-bit data into a 16-bit location, versus two for a 16-bit to 16-bit transfer. Note that it is possible to fully saturate the system bus in the LOCAL mode whereas in the REMOTE mode this is reduced to a maximum of 50%.

Table 2. Achievable 5 MHz 8089 Operations with a 16-Bit System Bus

	Local		Remote	
	Byte	Word	Byte	Word
Bandwidth	830 KB/S	1250 KB/S	830 KB/S	1250 KB/S
Latency	1.0/2.4 μsec*	1.0/2.4 μsec*	1.0/2.4 μsec*	1.0/2.4 μsec*
System Bus Utilization	2.4 μsec PER TRANSFER	1.6 μsec PER TRANSFER	0.8 μsec PER TRANSFER	0.8 μsec PER TRANSFER

*2.4 μsec if interleaving with other channel and no wait states. 1μsec if channel is waiting for request.

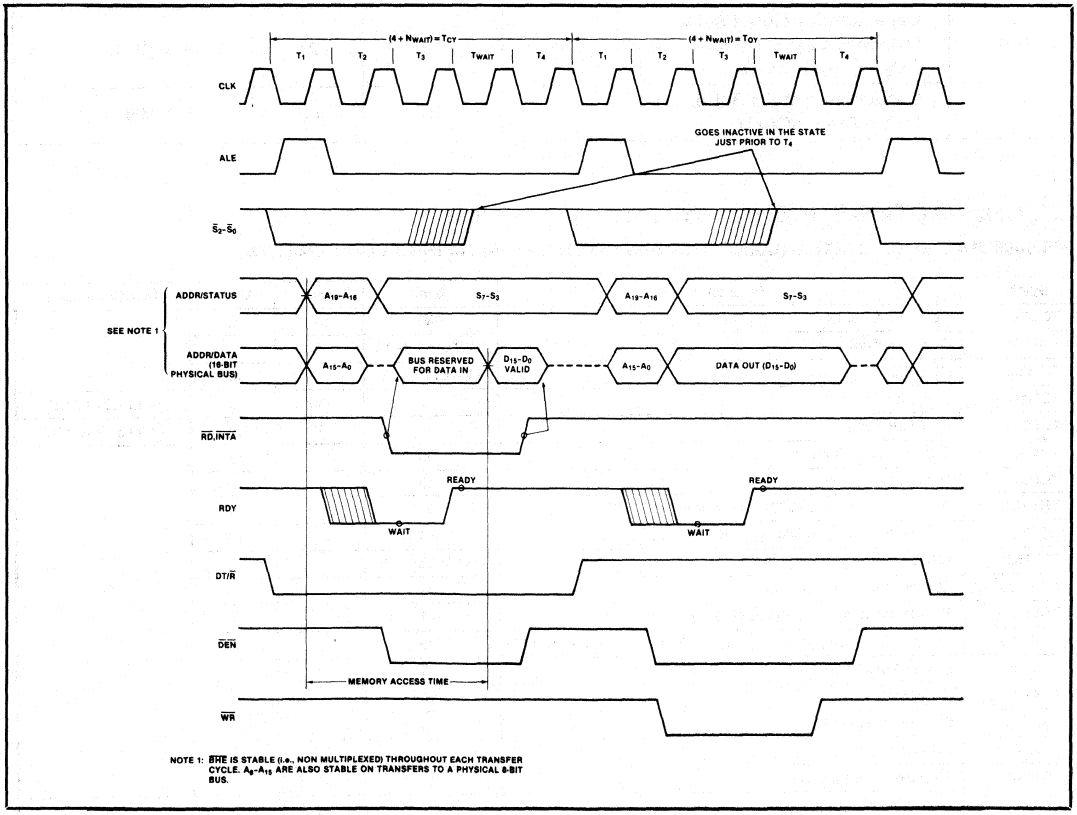

Figure 7. 8089 Bus Operation

ABSOLUTE MAXIMUM RATINGS*

Ambient Temperature Under Bias . . . . . 0°C to 70°C
Storage Temperature . . . . . – 65°C to + 150°C
Voltage on Any Pin with
Respect to Ground . . . . . – 1.0 to + 7V
Power Dissipation . . . . . 2.5 Watt

*NOTICE: Stresses above those listed under "Absolute Maximum Ratings" may cause permanent damage to the device. This is a stress rating only and functional operation of the device at these or any other conditions above those indicated in the operational sections of this specification is not implied. Exposure to absolute maximum rating conditions for extended periods may affect device reliability.

D.C. CHARACTERISTICS (T_A = 0°C to 70°C, V_{CC} = 5V ±10%)

Symbol	Parameter	Min.	Max.	Units	Test Conditions
V_{IL}	Input Low Voltage	– 0.5	+ 0.8	V	
V_{IH}	Input High Voltage	2.0	V_{CC} + 1.0	V	
V_{OL}	Output Low Voltage		0.45	V	I_{OL} = 2.0 mA
V_{OH}	Output High Voltage	2.4		V	I_{OH} = – 400 μA
I_{CC}	Power Supply Current		350	mA	T_A = 25°C
I_{LI}	Input Leakage Current(1)		± 10	μA	0V < VIN < V_{CC}
I_{LO}	Output Leakage Current		± 10	μA	0.45V ≤ V_{OUT} ≤ V_{CC}
V_{CL}	Clock Input Low Voltage	– 0.5	+ 0.6	V	
V_{CH}	Clock Input High Voltage	3.9	V_{CC} + 1.0	V	
C_{IN}	Capacitance of Input Buffer (All input except $AD_0 - AD_{15}$, $\overline{RQ}/\overline{GT}$)		15	pF	fc = 1 MHz
C_{IO}	Capacitance of I/O Buffer ($AD_0 - AD_{15}$, $\overline{RQ}/\overline{GT}$)		15	pF	fc = 1 MHz

A.C. CHARACTERISTICS (T_A = 0°C to 70°C, V_{CC} = 5V ±10%)

8089/8086 MAX MODE SYSTEM (USING 8288 BUS CONTROLLER) TIMING REQUIREMENTS

Symbol	Parameter	Min.	Max.	Units	Test Conditions
TCLCL	CLK Cycle Period	200	500	ns	
TCLCH	CLK Low Time	(⅔TCLCL) – 15		ns	
TCHCL	CLK High Time	(⅓TCLCL) + 2		ns	
TCH1CH2	CLK Rise Time		10	ns	From 1.0V to 3.5V
TCL2CL1	CLK Fall Time		10	ns	From 3.5V to 1.0V
TDVCL	Data In Setup Time	30		ns	
TCLDX	Data In Hold Time	10		ns	
TR1VCL	RDY Setup Time into 8284 (See Notes 1, 2)	35		ns	
TCLR1X	RDY Hold Time into 8284 (See Notes 1, 2)	0		ns	
TRYHCH	READY Setup Time into 8089	(⅔TCLCL) – 15		ns	
TCHRYX	READY Hold Time into 8089	30		ns	
TRYLCL	READY Inactive to CLK (See Note 4)	– 8		ns	
TINVCH	Setup Time Recognition (DRQ 1,2 RESET, Ext 1,2) (See Note 2)	30		ns	
TGVCH	$\overline{RQ}/\overline{GT}$ Setup Time	30		ns	
TCAHCAL	CA Width	95		ns	
TSLVCAL	SEL Setup Time	75		ns	
TCALSLX	SEL Hold Time	0		ns	
TCHGX	GT Hold Time into 8089	40		ns	
TILIH	Input Rise Time (Except CLK)		20	ns	From 0.8V to 2.0V
TIHIL	Input Fall Time (Except CLK)		12	ns	From 2.0V to 0.8V

A.C. CHARACTERISTICS (Continued)

TIMING RESPONSES

Symbol	Parameter	Min.	Max.	Units	Test Conditions
TCLML	Command Active Delay (See Note 1)	10	35	ns	C_L = 80 pF
TCLMH	Command Inactive Delay (See Note 1)	10	35	ns	
TRYHSH	READY Active to Status Passive (See Note 3)		110	ns	
TCHSV	Status Active Delay	10	110	ns	
TCLSH	Status Inactive Delay	10	130	ns	
TCLAV	Address Valid Delay	10	110	ns	
TCLAX	Address Hold Time	10		ns	
TCLAZ	Address Float Delay	TCLAX	80	ns	
TSVLH	Status Valid to ALE High (See Note 1)		15	ns	
TCLLH	CLK Low to ALE Valid (See Note 1)		15	ns	C_L = 150 pF
TCHLL	ALE Inactive Delay (See Note 1)		15	ns	
TCLDV	Data Valid Delay	10	110	ns	
TCHDX	Data Hold Time	10		ns	
TCVNV	Control Active Delay (See Note 1)	5	45	ns	
TCVNX	Control Inactive Delay (See Note 1)	10	45	ns	
TCHDTL	Direction Control Active Delay (See Note 1)		50	ns	
TCHDTH	Direction Control Inactive Delay (See Note 1)		30	ns	
TCLGL	$\overline{RQ}$ Active Delay	0	85	ns	C_L = 100 pF
TCLGH	$\overline{RQ}$ Inactive Delay		85	ns	Note 5: C_L = 30 pF
TCLSRV	SINTR Valid Delay		150	ns	C_L = 100 pF
TOLOH	**Output Rise Time**		**20**	**ns**	**From 0.8V to 2.0V**
TOHOL	**Output Fall Time**		**12**	**ns**	**From 2.0V to 0.8V**

NOTES: 1. Signal at 8284 or 8288 shown for reference only.
2. Setup requirement for asynchronous signal only to guarantee recognition at next CLK.
3. Aplies only to T3 and TW states.
4. Applies only to T2 state.
5. Applies only if RQ/GT Mode 1 C_L=30pf, 2.7 KΩ pull up to V_{CC}.

A.C. TESTING INPUT, OUTPUT WAVEFORM

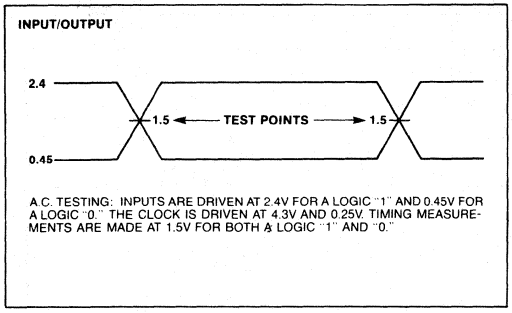

A.C. TESTING: INPUTS ARE DRIVEN AT 2.4V FOR A LOGIC "1" AND 0.45V FOR A LOGIC "0." THE CLOCK IS DRIVEN AT 4.3V AND 0.25V. TIMING MEASUREMENTS ARE MADE AT 1.5V FOR BOTH A LOGIC "1" AND "0."

A.C. TESTING LOAD CIRCUIT

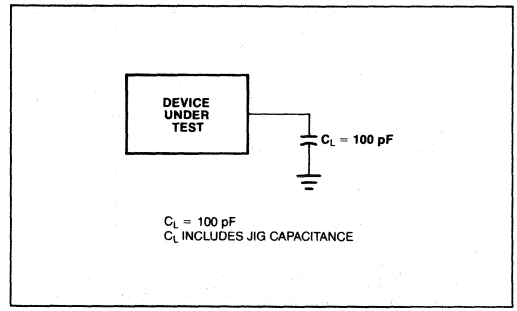

C_L = 100 pF
C_L INCLUDES JIG CAPACITANCE

WAVEFORMS

8089 BUS TIMING USING 8288

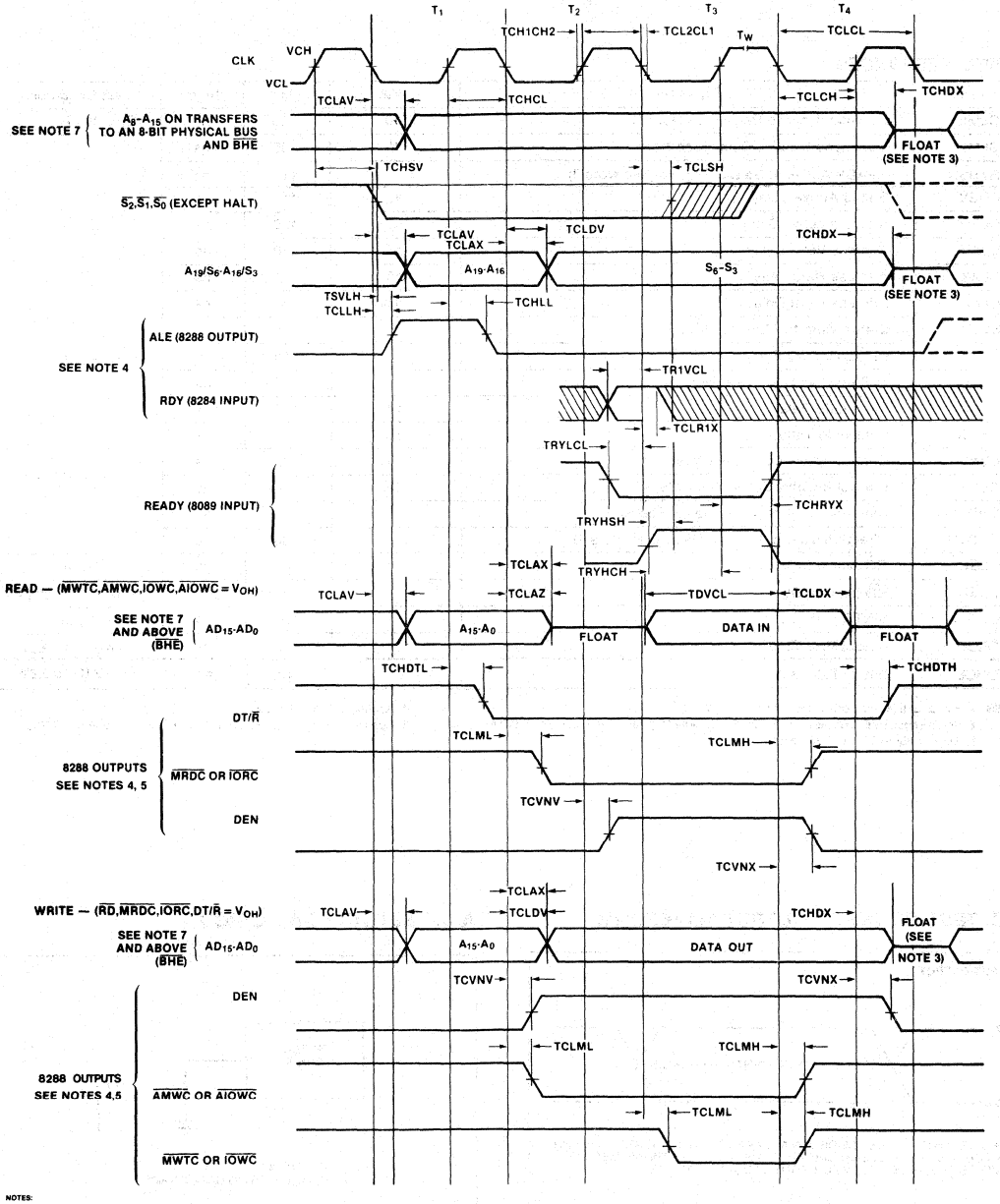

NOTES:
1. ALL SIGNALS SWITCH BETWEEN V_{OH} AND V_{OL} UNLESS OTHERWISE SPECIFIED.
2. RDY IS SAMPLED NEAR THE END OF T_2,T_3,T_W TO DETERMINE IF T_W MACHINE STATES ARE TO BE INSERTED.
3. FOLLOWING A WRITE CYCLE DATA REMAINS VALID ON THE 8089 LOCAL BUS UNTIL A LOCAL BUS MASTER DECIDES TO RUN ANOTHER BUS CYCLE. THE LOCAL BUS IS FLOATED BY THE 8089 WHEN THE 8089 ENTERS A REQUEST BUS ACKNOWLEDGE STATE.
4. SIGNALS AT 8284 OR 8288 ARE SHOWN FOR REFERENCE ONLY.
5. THE ISSUANCE OF THE 8288 COMMAND AND CONTROL SIGNALS (MRDC, MWTC, AMWC, IORC, IOWC, AIOWC, INTA, AND DEN) LAGS THE ACTIVE HIGH 8288 CEN.
6. ALL TIMING MEASUREMENTS ARE MADE AT 1.5V UNLESS OTHERWISE NOTED.
7. A_8-A_{15} ARE STABLE ON TRANSFERS TO AN 8-BIT PHYSICAL DATA BUS (i.e. A_8-A_{15} DON'T FLOAT ON A READ FROM AN 8-BIT PHYSICAL BUS OR MULTIPLEX WITH DATA ON A WRITE TO AN 8-BIT PHYSICAL BUS. BHE IS STABLE (NON MULTIPLEXED) FOR ALL TRANSFERS.

WAVEFORMS (Continued)

ASYNCHRONOUS SIGNAL RECOGNITION

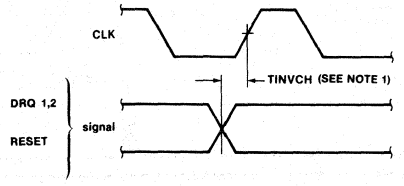

NOTES:

1. SETUP REQUIREMENTS FOR ASYNCHRONOUS SIGNALS ONLY TO GUARANTEE RECOGNITION AT NEXT CLK.
2. ALL INPUTS EXCEPT CA ARE LATCHED ON A CLK EDGE. THE CA INPUT IS NEGATIVE EDGE TRIGGERED.
3. DRQ BECOMING ACTIVE GREATER THAN 30 ns AFTER THE RISING EDGE OF CLK WILL GUARANTEE NON-RECOGNITION UNTIL THE NEXT RISING CLOCK EDGE.

BUS LOCK SIGNAL TIMING AND SINTR TIMING

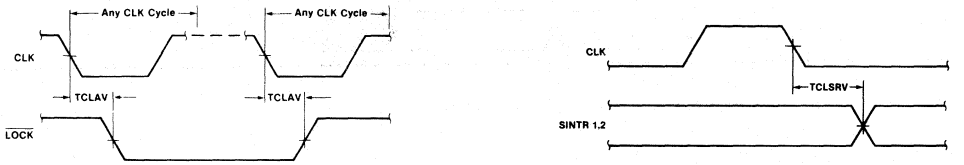

REQUEST/GRANT SEQUENCE TIMINGS

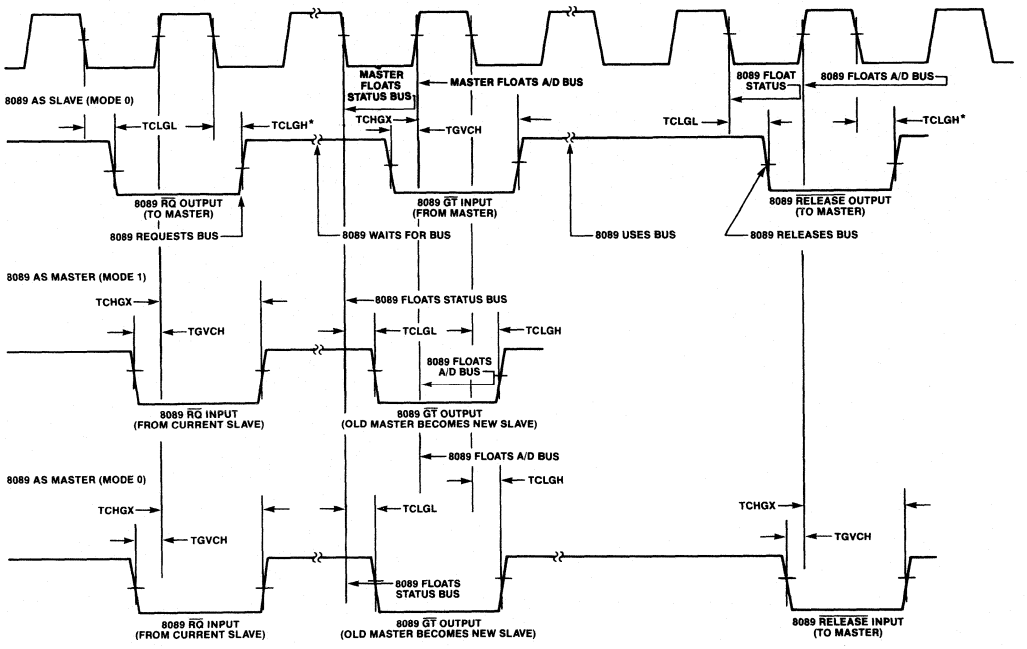

*CPU provides active pull-up.

WAVEFORMS (Continued)

EXTERNAL TERMINATE SETUP TIMING

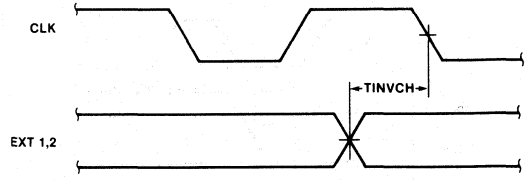

SEL SETUP AND TIMING

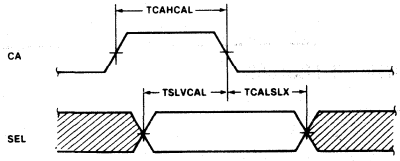

8089 INSTRUCTION SET SUMMARY

Data Transfers

	POINTER INSTRUCTIONS	OPCODE 7 0	7 0
LPD P,M	Load Pointer PPP from Addressed Location	P P P 0 0 A A 1	1 0 0 0 1 0 M M
LPDI P,I	Load Pointer PPP Immediate 4 Bytes	P P P 1 0 0 0 1	0 0 0 0 1 0 0 0
MOVP M,P	Store Contents of Pointer PPP in Addressed Location	P P P 0 0 A A 1	1 0 0 1 1 0 M M
MOVP P,M	Restore Pointer	P P P 0 0 A A 1	1 0 0 0 1 1 M M

	MOVE DATA	OPCODE
MOV M,M	Move from Source to Destination — Source—	0 0 0 0 0 A A W	1 0 0 1 0 0 M M
	Destination—	0 0 0 0 0 A A W	1 1 0 0 1 1 M M
MOV R,M	Load Register RRR from Addressed Location	R R R 0 0 A A W	1 0 0 0 0 0 M M
MOV M,R	Store Contents of Register RRR in Addressed Location	R R R 0 0 A A W	1 0 0 0 0 1 M M
MOVI R	Load Register RRR Immediate (Byte) Sign Extend	R R R wb 0 0 W	0 0 1 1 0 0 0 0
MOVI M	Move Immediate to Addressed Location	0 0 0 wb A A W	0 1 0 0 1 1 M M

Control Transfer

	CALLS	OPCODE 7 0	7 0
*CALL	Call Unconditional	1 0 0 dd A A W	1 0 0 1 1 1 M M

	JUMP	OPCODE
JMP	Unconditional	1 0 0 dd 0 0 W	0 0 1 0 0 0 0 0
JZ M	Jump on Zero Memory	0 0 0 dd A A W	1 1 1 0 0 1 M M
JZ R	Jump on Zero Register	R R R dd 0 0 0	0 1 0 0 0 1 0 0
JNZ M	Jump on Non-Zero Memory	0 0 0 dd A A W	1 1 1 0 0 0 M M
JNZ R	Jump on Non-Zero Register	R R R dd 0 0 0	0 1 0 0 0 0 0 0
JBT	Test Bit and Jump if True	B B B dd A A 0	1 0 1 1 1 1 M M
JNBT	Test Bit and Jump if Not True	B B B dd A A 0	1 0 1 1 1 0 M M
JMCE	Mask/Compare and Jump on Equal	0 0 0 dd A A 0	1 0 1 1 0 0 M M
JMCNE	Mask/Compare and Jump on Non-Equal	0 0 0 dd A A 0	1 0 1 1 0 1 M M

Arithmetic and Logic Instructions

	INCREMENT, DECREMENT	OPCODE 7 0	7 0
*ADDI M,I	ADD Immediate to Memory	0 0 0 0 0 A A W	1 1 1 0 1 0 M M
*ADDI R,I	ADD Immediate to Register	R R R 0 0 0 0 0	0 0 1 1 1 0 0 0
†ADD M,R	ADD Register to Memory	0 0 0 0 0 A A W	1 1 1 0 1 1 M M
†ADD R,M	ADD Memory to Register	R R R 0 0 0 0 0	0 0 1 1 1 1 0 0

Arithmetic and Logic Instructions

	ADD	OPCODE
		7 0 7 0
ADDI M,I	ADD Immediate to Memory	0 0 0 wb A A W 1 1 0 0 0 0 M M
ADDI R,I	ADD Immediate to Register	R R R wb 0 0 W 0 0 1 0 0 0 0 0
ADD M,R	ADD Register to Memory	R R R 0 0 A A W 1 1 0 1 0 0 M M
ADD R,M	ADD Memory to Register	R R R 0 0 A A W 1 0 1 0 0 0 M M
	AND	**OPCODE**
ANDI M,I	AND Memory with Immediate	0 0 0 wb A A W 1 1 0 0 1 0 M M
ANDI R,I	AND Register with Immediate	R R R wb 0 0 W 0 0 1 0 1 0 0 0
AND M,R	AND Memory with Register	R R R 0 0 A A W 1 1 0 1 1 0 M M
AND R,M	AND Register with Memory	R R R 0 0 A A W 1 0 1 0 1 0 M M
	OR	**OPCODE**
ORI M,I	OR Memory with Immediate	0 0 0 wb A A W 1 1 0 0 0 1 M M
ORI R,I	OR Register with Immediate	R R R wb A A W 0 0 1 0 0 1 0 0
OR M,R	OR Memory with Register	R R R 0 0 A A W 1 1 0 1 0 1 M M
OR R,M	OR Register with Memory	R R R 0 0 A A W 1 0 1 0 0 1 M M
	NOT	**OPCODE**
NOT R	Complement Register	R R R 0 0 0 0 0 0 1 0 1 1 0 0
NOT M	Complement Memory	0 0 0 0 0 A A W 1 1 0 1 1 1 M M
NOT R,M	Complement Memory, Place in Register	R R R 0 0 A A W 1 0 1 0 1 1 M M

Bit Manipulation and Test Instructions

	BIT MANIPULATION	OPCODE
		7 0 7 0
SET	Set the Selected Bit	B B B 0 0 A A 0 1 1 1 1 0 1 M M
CLR	Clear the Selected Bit	B B B 0 0 A A 0 1 1 1 1 1 0 M M
	TEST	**OPCODE**
TSL	Test and Set Lock	0 0 0 1 1 A A 0 1 0 0 1 0 1 M M

Control

	Control	OPCODE
		7 0 7 0
HLT	Halt Channel Execution	0 0 1 0 0 0 0 0 0 1 0 0 1 0 0 0
SINTR	Set Interrupt Service Flip Flop	0 1 0 0 0 0 0 0 0 0 0 0 0 0 0 0
NOP	No Operation	0 0 0 0 0 0 0 0 0 0 0 0 0 0 0 0
XFER	Enter DMA Transfer	0 1 1 0 0 0 0 0 0 0 0 0 0 0 0 0
WID	Set Source, Destination Bus Width; S,D 0 = 8, 1 = 16	1 S D 0 0 0 0 0 0 0 0 0 0 0 0 0

*AAField in call instruction can be 00, 01, 10 only.
**OPCODE is second byte fetched.

All instructions consist of at least 2 bytes, while some instructions may use up to 3 additional bytes to specify literals and displacement data. The definition of the various fields within each instruction is given below:

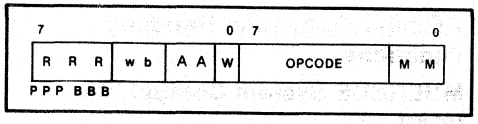

MM	Base Pointer Select
00	GA
01	GB
10	GC
11	PP

RRR Register Field

The RRR field specifies a 16-bit register to be used in the instruction. If GA, GB, GC or TP, are referenced by the RRR field, the upper 4 bits of the registers are loaded with the sign bit (Bit 15). PPP registers are used as 20-bit address pointers.

RRR			
000	r0	GA	
001	r1	GB	
010	r2	GC	
011	r3	BC	; byte count
100	r4	TP	; task block
101	r5	IX	; index register
110	r6	CC	; channel control (mode)
111	r7	MC	; mask/compare

PPP			
000	p0	GA	;
001	p1	GB	;
010	p2	GC	:
100	p4	TP	; task block pointer

NOTES:

BBB Bit Select Field

The bit select field replaces the RRR field in bit manipulation instructions and is used to select a bit to be operated on by those instructions. Bit 0 is the least significant bit.

wb

01 1 byte literal
10 2 byte (word) literal

dd

01 1 byte displacement
10 2 byte (word) displacement.

AA Field

00 The selected pointer contains the operand address.
01 The operand address is formed by adding an 8-bit, unsigned, offset contained in the instruction to the selected pointer. The contents of the pointer are unchanged.
10 The operand address is formed by adding the contents of the Index register to the selected pointer. Both registers remain unchanged.
11 Same as 10 except the Index register is post auto-incremented (by 1 for 8-bit transfer, by 2 for 16-bit transfer).

W Width Field

0 The selected operand is 1 byte long.
1 The selected operand is 2 bytes long.

Additional Bytes

OFFSET : 8-bit unsigned offset.
SDISP : 8/16-bit signed displacement.
LITERAL : 8/16-bit literal. (32 bits for LDPI).

The order in which the above optional bytes appear in IOP instructions is given below:

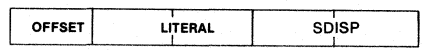

Offsets are treated as unsigned numbers. Literals and displacements are sign extended (2's complement).

PRELIMINARY

iAPX 86/20
iAPX 88/20
NUMERIC DATA PROCESSOR

- **High Performance 2-Chip Numeric Data Processor**
- **Standard iAPX 86/10, 88/10 Instruction Set Plus Arithmetic, Trigonometric, Exponential, and Logarithmic Instructions For All Data Types**
- **All 24 iAPX 86/10, 88/10 Addressing Modes Available**
- **Conforms To Proposed IEEE Floating Point Standard**
- **Support 8 Data Types: 8-, 16-, 32-, 64-Bit Integers, 32-, 64-, 80-Bit Floating Point, and 18-Digit BCD Operands**
- **8x80-Bit Individually Addressable Register Stack plus 14 General Purpose Registers**
- **7 Built-in Exception Handling Functions**
- **MULTIBUS System Compatible Interface**

The Intel iAPX 86/20 and iAPX 88/20 are two-chip numeric data processors (NDP's). They provide the instructions and data types needed for high-performance numeric applications. The NDP provides 100 times the performance of an iAPX 86/10, 88/10 CPU alone for numeric processing. The iAPX 86/20 consists of an iAPX 86/10 (16-bit 8086 CPU) and a numeric processor extension (NPX), the 8087. The iAPX 88/20 consists of the NPX in conjunction with the iAPX 88/10 (8-bit 8088 CPU). The NDP conforms to the proposed IEEE Floating Point Standard.

Both components of the iAPX 86/20 and iAPX 88/20 are implemented in N-channel, depletion load, silicon gate technology (HMOS), housed in two 40-pin packages. The iAPX 86/20, 88/20 adds 68 numeric processing instructions to the iAPX 86/10, 88/10 instruction set and eight 80-bit registers to the register set.

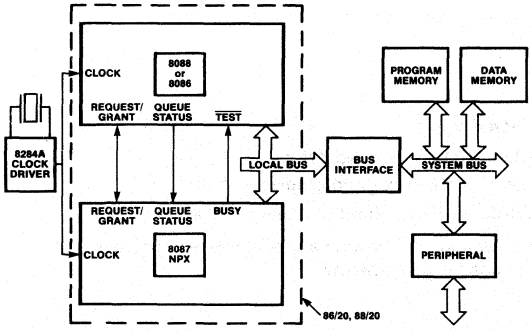

Figure 1. iAPX 86/20, 88/20 Block Diagram

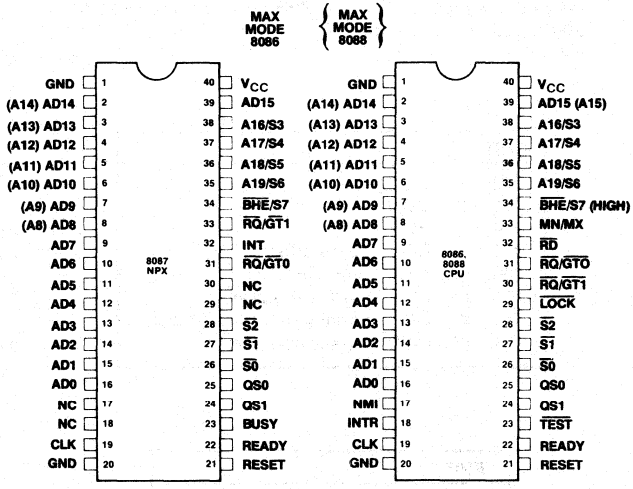

Figure 2. iAPX 86/20, 88/20 Pin Configuration

Intel Corporation Assumes No Responsibilty for the Use of Any Circuitry Other Than Circuitry Embodied in an Intel Product. No Other Circuit Patent Licenses are Implied.
©INTEL CORPORATION, 1981.

Table 1. 8087 Pin Description

Symbol	Type	Name and Function
AD15–AD0	I/O	**Address Data:** These lines constitute the time multiplexed memory address (T_1) and data (T_2, T_3, T_W, T_4) bus. A0 is analogous to $\overline{BHE}$ for the lower byte of the data bus, pins D7–D0. It is LOW during T_1 when a byte is to be transferred on the lower portion of the bus in memory operations. Eight-bit oriented devices tied to the lower half of the bus would normally use A0 to condition chip select functions. These lines are active HIGH. They are input/output lines for 8087 driven bus cycles and are inputs which the 8087 monitors when the 8086/8088 is in control of the bus. A15-A8 do not require an address latch in an iAPX 88/20. The 8087 will supply an address for the T_1-T_4 period.
A19/S6, A18/S5, A17/S4, A16/S3	I/O	**Address Memory:** During T_1 these are the four most significant address lines for memory operations. During memory operations, status information is available on these lines during T_2, T_3, T_W, and T_4. For 8087 controlled bus cycles, S6, S4, and S3 are reserved and currently one (HIGH), while S5 is always LOW. These lines are inputs which the 8087 monitors when the 8086/8088 is in control of the bus.
BHE/S7	I/O	**Bus High Enable:** During T_1 the bus high enable signal ($\overline{BHE}$) should be used to enable data onto the most significant half of the data bus, pins D15–D8. Eight-bit oriented devices tied to the upper half of the bus would normally use $\overline{BHE}$ to condition chip select functions. $\overline{BHE}$ is LOW during T_1 for read and write cycles when a byte is to be transferred on the high portion of the bus. The S7 status information is available during T_2, T_3, T_W, and T_4. The signal is active LOW. S7 is an input which the 8087 monitors during 8086/8088 controlled bus cycles.
$\overline{S2}$, $\overline{S1}$, $\overline{S0}$	I/O	**Status:** For 8087 driven bus cycles, these status lines are encoded as follows: $\overline{S2}$ $\overline{S1}$ $\overline{S0}$ 0 (LOW) X X Unused 1 (HIGH) 0 0 Unused 1 0 1 Read Memory 1 1 0 Write Memory 1 1 1 Passive Status is driven active during T_4, remains valid during T_1 and T_2, and is returned to the passive state (1, 1, 1) during T_3 or during T_W when READY is HIGH. This status is used by the 8288 Bus Controller to generate all memory access control signals. Any change in $\overline{S2}$, $\overline{S1}$, or $\overline{S0}$ during T_4 is used to indicate the beginning of a bus cycle, and the return to the passive state in T_3 or T_W is used to indicate the end of a bus cycle. These signals are monitored by the 8087 when the 8086/8088 is in control of the bus.
$\overline{RQ}/\overline{GT0}$	I/O	**Request/Grant:** This request/grant pin is used by the NPX to gain control of the local bus from the CPU for operand transfers or on behalf of another bus master. It must be connected to one of the two processor request/grant pins. The request grant sequence on this pin is as follows: 1. A pulse one clock wide is passed to the CPU to indicate a local bus request by either the 8087 or the master connected to the 8087 $\overline{RQ}/\overline{GT1}$ pin. 2. The 8087 waits for the grant pulse and when it is received will either initiate bus transfer activity in the clock cycle following the grant or pass the grant out on the $\overline{RQ}/\overline{GT1}$ pin in this clock if the initial request was for another bus master. 3. The 8087 will generate a release pulse to the CPU one clock cycle after the completion of the last 8087 bus cycle or on receipt of the release pulse from the bus master on $\overline{RQ}/\overline{GT1}$.

Table 1. 8087 Pin Description (Continued)

Symbol	Type	Name and Function
$\overline{RQ}/\overline{GT}1$	I/O	**Request/Grant:** This request/grant pin is used by another local bus master to force the 8087 to request the local bus. If the 8087 is not in control of the bus when the request is made the request/grant sequence is passed through the 8087 on the $\overline{RQ}/\overline{GT}0$ pin one cycle later. Subsequent grant and release pulses are also passed through the 8087 with a two and one clock delay, respectively, for resynchronization. $\overline{RQ}/\overline{GT}1$ has has an internal pullup resistor, and so may be left unconnected. If the 8087 has control of the bus the request/grant sequence is as follows: 1. A pulse 1 CLK wide from another local bus master indicates a local bus request to the 8087 (pulse 1). 2. During the 8087's next T_4 or T_1 a pulse 1 CLK wide from the 8087 to the requesting master (pulse 2) indicates that the 8087 has allowed the local bus to float and that it will enter the "RQ/GT acknowledge" state at the next CLK. The 8087's control unit is disconnected logically from the local bus during "RQ/GT acknowledge." 3. A pulse 1 CLK wide from the requesting master indicates to the 8087 (pulse 3) that the "RQ/GT" request is about to end and that the 8087 can reclaim the local bus at the next CLK. Each master-master exchange of the local bus is a sequence of 3 pulses. There must be one dead CLK cycle after each bus exchange. Pulses are active LOW.
QS1, QS0	I	**QS1, QS0:** QS1 and QS0 provide the 8087 with status to allow tracking of the CPU instruction queue. **QS1** **QS0** 0 (LOW) 0 No Operation 0 1 First Byte of Op Code from Queue 1 (HIGH) 0 Empty the Queue 1 1 Subsequent Byte from Queue
INT	O	**Interrupt:** This line is used to indicate that an unmasked exception has occurred during numeric instruction execution when 8087 interrupts are enabled. This signal is typically routed to an 8259A. INT is active HIGH.
BUSY	O	**Busy:** This signal indicates that the 8087 NEU is executing a numeric instruction. It is connected to the CPU's $\overline{TEST}$ pin to provide synchronization. In the case of an unmasked exception BUSY remains active until the exception is cleared. BUSY is active HIGH.
READY	I	**Ready:** READY is the acknowledgment from the addressed memory device that it will complete the data transfer. The RDY signal from memory is synchronized by the 8284A Clock Generator to form READY. This signal is active HIGH.
RESET	I	**Reset:** RESET causes the processor to immediately terminate its present activity. The signal must be active HIGH for at least four clock cycles. RESET is internally synchronized.
CLK	I	**Clock:** The clock provides the basic timing for the processor and bus controller. It is asymmetric with a 33% duty cycle to provide optimized internal timing.
V_{CC}		**Power:** V_{CC} is the +5V power supply pin.
GND		**Ground:** GND are the ground pins.

NOTE:
For the pin descriptions of the 8086 and 8088 CPU's reference those respective data sheets (iAPX 86/10, iAPX 88/10).

APPLICATION AREAS

The iAPX 86/20 and iAPX 88/20 provide functions meant specifically for high performance numeric processing requirements. Trigonometric, logarithmic, and exponential functions are built into the processor hardware. These functions are essential in scientific, engineering, navigational, or military applications.

The NDP also has capabilities meant for business or commercial computing. An iAPX 86/20, 88/20 can process Binary Coded Decimal (BCD) numbers up to 18 digits without roundoff errors. It can also perform arithmetic on integers as large as 64 bits ($\pm 10^{18}$).

PROGRAMMING LANGUAGE SUPPORT

Programs for the iAPX 86/20 and iAPX 88/20 can be written in ASM-86, the iAPX 86,88 assembly language, PL/M-86, FORTRAN-86, and PASCAL-86, Intel's high-level languages for iAPX 86, 88 systems.

Details

The remainder of the data sheet will concentrate on the numeric processor extension (refered to as NPX or 8087). For iAPX 86/10 or iAPX 88/10 CPU details refer to those respective data sheets.

FUNCTIONAL DESCRIPTION

The iAPX 86/20, 88/20 Numeric Data Processor's architecture is designed for high performance numeric computing in conjunction with general purpose processing.

The 8087 is a numeric processor extension that provides arithmetic and logical instruction support for a variety of numeric data types in iAPX 86/20, 88/20 systems. It also executes numerous built-in transcendental functions (e.g., tangent and log functions). The 8087 executes instructions as a coprocessor to a maximum mode 8086 or 8088. It effectively extends the register and instruction set of an iAPX 86/10 or 88/10 based system and adds several new data types as well. Figure 3 presents the registers of the iAPX 86/20. Table 2 shows the range of data types supported by the NDP. The 8087 is treated as an extension to the iAPX 86/10 or 88/10, providing register, data types, control, and instruction capabilities at the hardware level. At the programmers level the iAPX 86/20, 88/20 is viewed as a single unified processor.

iAPX 86/20, 88/20 System Configuration

As a coprocessor to an 8086 or 8088, the 8087 is wired in parallel with the CPU as shown in Figure 4. The CPU's status ($\overline{S0}$-$\overline{S2}$) and queue status lines (QS0-QS1) enable the 8087 to monitor and decode

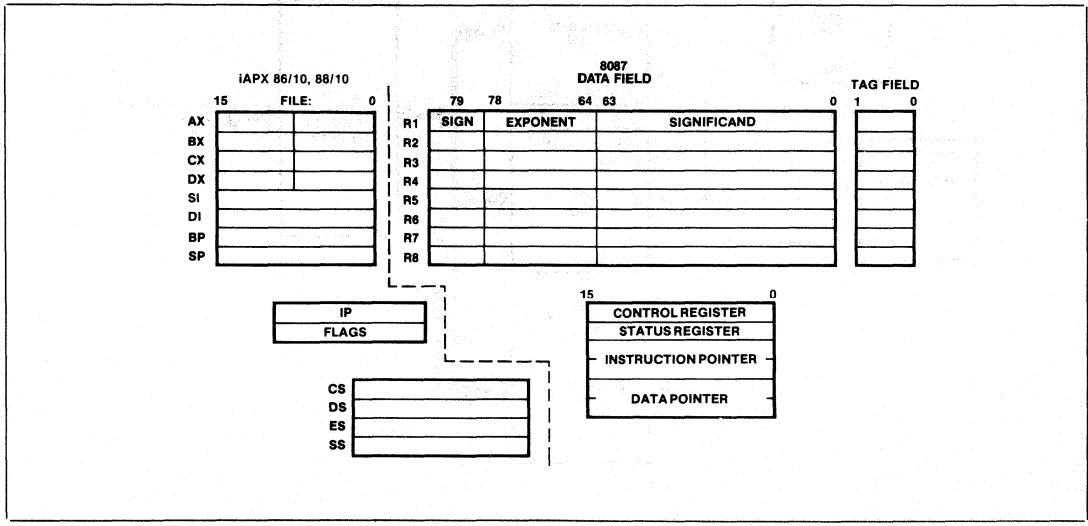

Figure 3. iAPX 86/20 Architecture

Table 2. iAPX 86/20, 88/20 Data Types

Data Formats	Range	Precision	Most Significant Byte
			7 0 7 0 7 0 7 0 7 0 7 0 7 0 7 0 7 0
Byte Integer	10^2	8 Bits	I_7 I_0 Two's Complement
Word Integer	10^4	16 Bits	I_{15} I_0 Two's Complement
Short Integer	10^9	32 Bits	I_{31} I_0 Two's Complement
Long Integer	10^{18}	64 Bits	I_{63} I_0 Two's Complement
Packed BCD	10^{18}	18 Digits	S — $D_{17}D_{16}$ D_1 D_0
Short Real	$10^{\pm 38}$	24 Bits	S E_7 E_0 F_1 F_{23} F_0 Implicit
Long Real	$10^{\pm 308}$	53 Bits	S E_{10} E_0 F_1 F_{52} F_0 Implicit
Temporary Real	$10^{\pm 4932}$	64 Bits	S E_{14} E_0 F_0 F_{63}

Integer: I

Real: $(-1)^S(2^{E\text{-}BIAS})(F_0 \cdot F_1 \ldots)$

Packed BCD: $(-1)^S(D_{17} \ldots D_0)$

Bias=127 for Short Real
1023 for Long Real
16383 for Temp Real

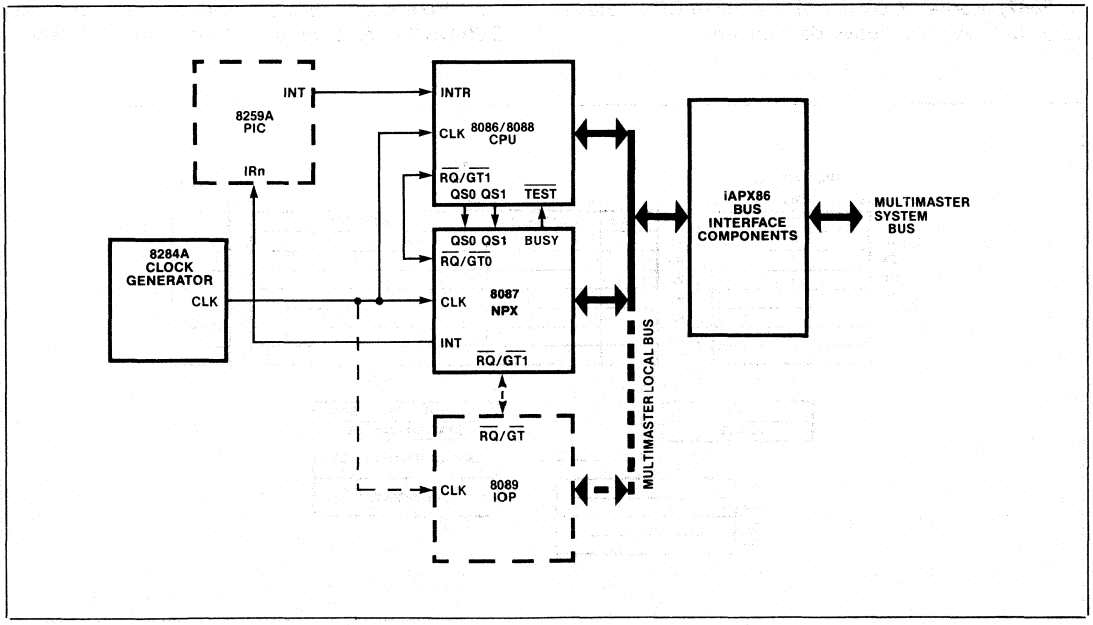

Figure 4. NDP System Configuration

instructions in synchronization with the CPU and without any CPU overhead. Once started the 8087 can process in parallel with and independent of the host CPU. For resynchronization, the NPX's BUSY signal informs the CPU that the NPX is executing an instruction and the CPU WAIT instruction tests this signal to insure that the NPX is ready to execute subsequent instructions. The NPX can interrupt the CPU when it detects an error or exception. The 8087's interrupt request line is typically routed to the CPU through an 8259A Programmable Interrupt Controller. (See Figure 2 for 8087 pinout information.)

The 8087 uses one of the request/grant lines of the iAPX 86, 88 architecture (typically $\overline{RQ}/\overline{GT1}$) to obtain control of the local bus for data transfers. The other request/grant line is available for general system use (for instance by an I/O processor in LOCAL mode). A bus master can also be connected to the 8087's $\overline{RQ}/\overline{GT1}$ line. In this configuration the 8087 will pass the request/grant handshake signals between the CPU and the attached master when the 8087 is not in control of the bus and will relinquish the bus to the master directly when the 8087 is in control. In this way two additional masters can be configured in an iAPX 86/20, 88/20 system; one will share the 8086 bus with the 8087 on a first come first served basis, and the second will be guaranteed to be higher in priority than the 8087.

As Figure 4 shows, all processors utilize the same clock generator and system bus interface components (bus controller, latches, transceivers and bus arbiter).

Bus Operation

The 8087 bus structure, operation and timing are identical to all other processors in the iAPX 86, 88 series (maximum mode configuration). The address is time multiplexed with the data on the first 16/8 lines of the address/data bus. A16 through A19 are time multiplexed with four status lines S3–S6. S3, S4 and S6 are always one (high) for 8087 driven bus cycles while S5 is always zero (low). When the 8087 is monitoring CPU bus cycles (passive mode) S6 is also monitored by the 8087 to differentiate 8086/8088 activity from that of a local I/O processor or any other local bus master. (The 8086/8088 must be the only processor on the local bus to drive S6 low.) S7 is multiplexed with and has the same value as $\overline{BHE}$ for all 8087 bus cycles.

The first three status lines, $\overline{S0}$-$\overline{S2}$, are used with an 8288 bus controller to determine the type of bus cycle being run:

$\overline{S2}$	$\overline{S1}$	$\overline{S0}$	
0	X	X	Unused
1	0	0	Unused
1	0	1	Memory Data Read
1	1	0	Memory Data Write
1	1	1	Passive (no bus cycle)

Programming Interface

The NDP includes the standard iAPX 86/10, 88/10 instruction set for general data manipulation and program control. It also includes 68 numeric instructions for extended precision integer, floating point, trigonometric, logarithmic, and exponential functions. Sample execution times for several NDP functions are shown in Figure 4. Overall iAPX 86/20 system performance is 100 times that of an iAPX 86/10 class processor for numeric instructions.

Any instruction executed by the NDP is the combined result of the CPU and NPX activity. The CPU and the NPX have specialized functions and registers providing fast concurrent operation. The CPU controls overall program execution while the NPX uses the coprocessor interface to recognize and perform numeric operations.

Table 2 lists the eight data types the iAPX 86/20, 88/20 supports and presents the format for each type. Internally, the NPX holds all numbers in the temporary real format. Load and store instructions automatically convert operands represented in memory as 16-, 32-, or 64-bit integers, 32- or 64-bit floating point numbers or 18-digit packed BCD numbers into temporary real format and vice versa. The NDP also provides the capability to control round off, underflow, and overflow errors in each calculation.

Computations in the NPX use the processor's register stack. These eight 80-bit registers provide the equivalent capacity of 20 32-bit registers. The NPX register set can be accessed as a stack, with instructions operating on the top one or two stack elements, or as a fixed register set, with instructions operating on explicitly designated registers.

Table 5 lists the 8087's instructions by class. All appear as ESCAPE instructions to the host. Assembly language programs are written in ASM-86, the iAPX 86, 88 assembly language. Table 3 gives the execution times of some typical numeric instructions.

Table 3. Execution Times for Selected iAPX 86/20 Numeric Instructions and Corresponding iAPX 86/10 Emulation

Floating Point Instruction	Approximate Execution Time (μs)	
	iAPX 86/20 (5 MHz Clock)	iAPX 86/10 Emulation
Add/Subtract	17	1,600
Multiply (single precision)	19	1,600
Multiply (extended precision)	27	2,100
Divide	39	3,200
Compare	9	1,300
Load (double precision)	10	1,700
Store (double precision)	21	1,200
Square Root	36	19,600
Tangent	90	13,000
Exponentiation	100	17,100

NUMERIC PROCESSOR EXTENSION ARCHITECTURE

As shown in Figure 5, the 8087 is internally divided into two processing elements, the control unit (CU) and the numeric execution unit (NEU). The NEU executes all numeric instructions, while the CU receives and decodes instructions, reads and writes memory operands and executes NPX control instructions. The two elements are able to operate independently of one another, allowing the CU to maintain synchronization with the CPU while the NEU is busy processing a numeric instruction.

Control Unit

The CU keeps the 8087 operating in synchronization with its host CPU. 8087 instructions are intermixed with CPU instructions in a single instruction stream. The CPU fetches all instructions from memory; by monitoring the status signals ($\overline{S0}$-$\overline{S2}$, S6) emitted by the CPU, the NPX control unit determines when an

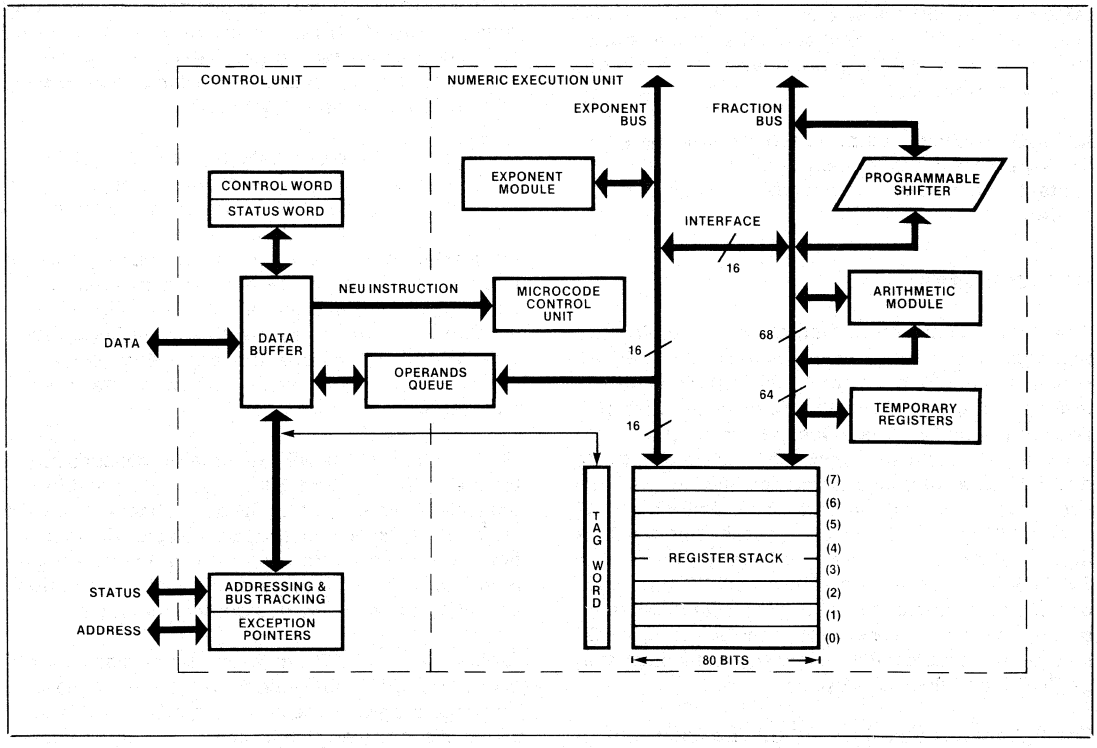

Figure 5. 8087 Block Diagram

8086 instruction is being fetched. The CU monitors the Data bus in parallel with the CPU to obtain instructions that pertain to the 8087.

The CU maintains an instruction queue that is identical to the queue in the host CPU. The CU automatically determines if the CPU is an 8086 or an 8088 immediately after reset (by monitoring the $\overline{BHE}$/ S7 line) and matches its queue length accordingly. By monitoring the CPU's queue status lines (QS0, QS1), the CU obtains and decodes instructions from the queue in synchronization with the CPU.

A numeric instruction appears as an ESCAPE instruction to the 8086 or 8088 CPU. Both the CPU and NPX decode and execute the ESCAPE instruction together. The 8087 only recognizes the numeric instructions shown in Table 5. The start of a numeric operation is accomplished when the CPU executes the ESCAPE instruction. The instruction may or may not identify a memory operand.

The CPU does, however, distinguish between ESC instructions that reference memory and those that do not. If the instruction refers to a memory operand, the CPU calculates the operand's address using any one of its available addressing modes, and then performs a "dummy read" of the word at that location. (Any location within the 1M byte address space is allowed.) This is a normal read cycle except that the CPU ignores the data it receives. If the ESC instruction does not contain a memory reference (e.g. an 8087 stack operation), the CPU simply proceeds to the next instruction.

An 8087 Instruction can have one of three memory reference options; (1) not reference memory; (2) load an operand word from memory into the 8087; or (3) store an operand word from the 8087 into memory. If no memory reference is required, the 8087 simply executes its instruction. If a memory reference is required, the CU uses a "dummy read" cycle initiated by the CPU to capture and save the address that the CPU places on the bus. If the instruction is a load, the CU additionally captures the data word when it becomes available on the local data bus. If data required is longer than one word, the CU immediately obtains the bus from the CPU using the request/grant protocol and reads the rest of the information in consecutive bus cycles. In a store operation, the CU captures and saves the store address as in a load, and ignores the data word that follows in the "dummy read" cycle. When the 8087 is ready to perform the store, the CU obtains the bus from the CPU and writes the operand starting at the specified address.

Numeric Execution Unit

The NEU executes all instructions that involve the register stack; these include arithmetic, logical, transcendental, constant and data transfer instructions. The data path in the NEU is 84 bits wide (68 fraction bits, 15 exponent bits and a sign bit) which allows internal operand transfers to be performed at very high speeds.

When the NEU begins executing an instruction, it activates the 8087 BUSY signal. This signal can be used in conjunction with the CPU WAIT instruction to resynchronize both processors when the NEU has completed its current instruction.

Register Set

The iAPX 86/20 register set is shown in Figure 3. Each of the eight data registers in the 8087's register stack is 80 bits wide and is divided into "fields" corresponding to the NDP's temporary real data type.

At a given point in time the TOP field in the control word identifies the current top-of-stack register. A "push" operation decrements TOP by 1 and loads a value into the new top register. A "pop" operation stores the value from the current top register and then increments TOP by 1. Like iAPX 86/10, 88/10 stacks in memory, the 8087 register stack grows "down" toward lower-addressed registers.

Instructions may address the data registers either implicitly or explicitly. Many instructions operate on the register at the top of the stack. These instructions implicitly address the register pointed to by the TOP. Other instructions allow the programmer to explicitly specify the register which is to be used. Explicit register addressing is "top-relative."

Status Word

The status word shown in Figure 6 reflects the overall state of the 8087; it may be stored in memory and then inspected by CPU code. The status word is a 16-bit register divided into fields as shown in Figure 6. The busy bit (bit 15) indicates whether the *NEU* is either executing an instruction or has an interrupt request pending (B = 1), or is idle (B = 0). Several instructions which store and manipulate the status word are executed exclusively by the CU, and these do not set the busy bit themselves.

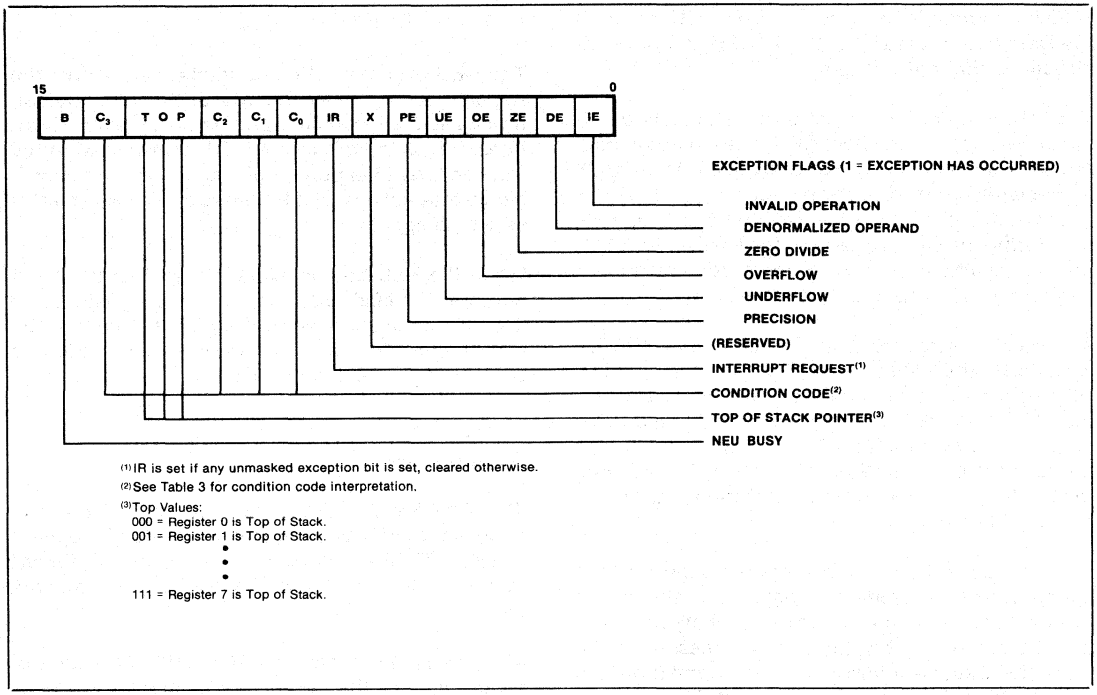

Figure 6. 8087 Status Word

The four numeric condition code bits (C_0–C_3) are similar to the flags in a CPU: various instructions update these bits to reflect the outcome of NDP operations. The effect of these instructions on the condition code bits is summarized in Table 4.

Bits 14–12 of the status word point to the 8087 register that is the current top-of-stack (TOP) as described above.

Bit 7 is the interrupt request bit. This bit is set if any unmasked exception bit is set and cleared otherwise.

Bits 5–0 are set to indicate that the NEU has detected an exception while executing an instruction.

Tag Word

The tag word marks the content of each register as shown in Figure 7. The principal function of the tag word is to optimize the NDP's performance. The tag word can be used, however, to interpret the contents of 8087 registers.

Instruction and Data Pointers

The instruction and data pointers (see Figure 8) are provided for user-written error handlers. Whenever the 8087 executes an NEU instruction, the CU saves the instruction address, the operand address (if present) and the instruction opcode. 8087 instructions can store this data into memory.

Table 4. Condition Code Interpretation

Instruction	C_3	C_2	C_1	C_0	Interpretation
Compare, Test	0	X	X	0	A > B
	0	X	X	1	A < B
	1	X	X	0	A = B
	1	X	X	1	A ? B (not comparable)
Remainder	Q_1	0	Q_0	Q_2	Complete reduction
	Q_1	1	Q_0	Q_2	Incomplete reduction
Examine	0	0	0	0	Valid, positive, unnormalized
	0	0	0	1	Invalid, positive, exponent ≠ 0
	0	0	1	0	Valid, negative, unnormalized
	0	0	1	1	Invalid, negative, exponent ≠ 0
	0	1	0	0	Valid, positive, normalized
	0	1	0	1	Infinity, positive
	0	1	1	0	Valid, negative, normalized
	0	1	1	1	Infinity, negative
	1	0	0	0	Zero, positive
	1	0	0	1	Empty
	1	0	1	0	Zero, negative
	1	0	1	1	Empty
	1	1	0	0	Invalid, positive, exponent = 0
	1	1	0	1	Empty
	1	1	1	0	Invalid, negative, exponent = 0
	1	1	1	1	Empty

X = value is not affected by instruction.
Q = C_0, C_3, C_1 hold 3 LSBs of the quotient generated during a remainder operation.

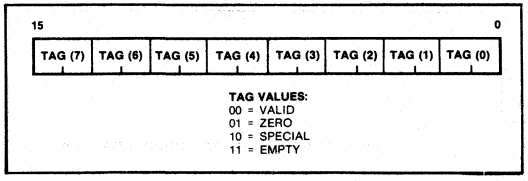

Figure 7. 8087 Tag Word

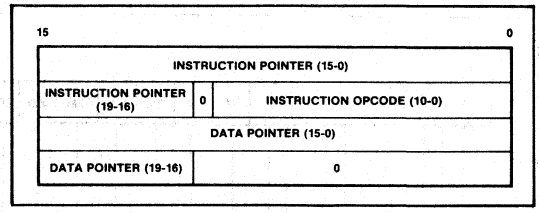

Figure 8. 8087 Instruction and Data Pointers

Control Word

The 8087 provides several processing options which are selected by loading a word from memory into the control word. Figure 9 shows the format and encoding of the fields in the control word.

The low order byte of this control word configures 8087 interrupts and exception masking. Bits 5–0 of the control word contain individual masks for each of the six exceptions that the 8087 recognizes and bit 7 contains a general mask bit for all 8087 interrupts. The high order byte of the control word configures the 8087 operating mode including precision, rounding, and infinity controls. The precision control bits (bits 9–8) can be used to set the 8087 internal operating precision at less than the default of temporary real precision. This can be useful in providing compatibility with earlier generation arithmetic processors of smaller precision than the 8087. The rounding control bits (bits 11–10) provide for directed rounding and true chop as well as the unbiased round to nearest mode specified in the proposed IEEE standard. Control over closure of the number space at infinity is also provided (either affine closure, $\pm\infty$, or projective closure, ∞, is treated as unsigned, may be specified).

Exception Handling

The 8087 detects six different exception conditions that can occur during instruction execution. Any or all exceptions will cause an interrupt if unmasked and interrupts are enabled.

If interrupts are disabled the 8087 will simply continue execution regardless of whether the host clears the exception. If a specific exception class is masked and that exception occurs, however, the 8087 will post the exception in the status register and perform an on-chip default exception handling procedure, thereby allowing processing to continue. The exceptions that the 8087 detects are the following:

1. INVALID OPERATION: Stack overflow, stack underflow, indeterminate form (0/0, $\infty - \infty$, etc.) or the use of a Non-Number (NAN) as an operand. An exponent value is reserved and any bit pattern with this value in the exponent field is termed a Non-Number and causes this exception. If this exception is masked, the 8087's default response is to generate a specific NAN called INDEFINITE, or to propagate already existing NANs as the calculation result.

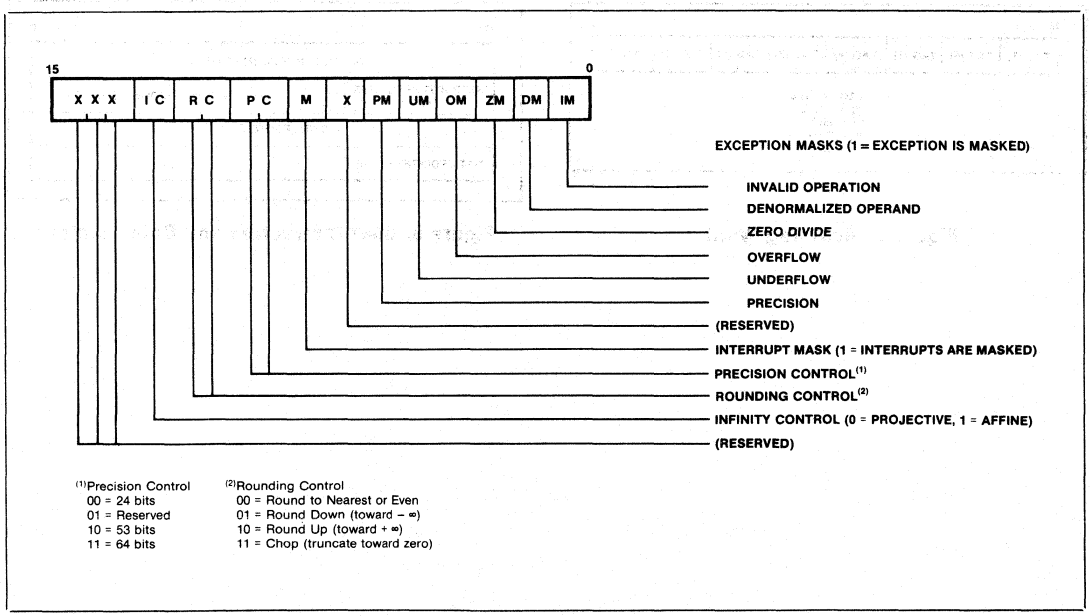

Figure 9. 8087 Control Word

2. OVERFLOW: The result is too large in magnitude to fit the specified format. The 8087 will generate an encoding for infinity if this exception is masked.

3. ZERO DIVISOR: The divisor is zero while the dividend is a non-infinite, non-zero number. Again, the 8087 will generate an encoding for infinity if this exception is masked.

4. UNDERFLOW: The result is non-zero but too small in magnitude to fit in the specified format. If this exception is masked the 8087 will denormalize (shift right) the fraction until the exponent is in range. This process is called gradual underflow.

5. DENORMALIZED OPERAND: At least one of the operands or the result is denormalized; it has the smallest exponent but a non-zero significand. Normal processing continues if this exception is masked off.

6. INEXACT RESULT: If the true result is not exactly representable in the specified format, the result is rounded according to the rounding mode, and this flag is set. If this exception is masked, processing will simply continue.

ABSOLUTE MAXIMUM RATINGS*

Ambient Temperature Under Bias .....0°C to 70°C
Storage Temperature .....−65°C to +150°C
Voltage on Any Pin with
Respect to Ground .....−1.0V to +7V
Power Dissipation .....3.0 Watt

**NOTICE: Stresses above those listed under Absolute Maximum Ratings may cause permanent damage to the device. This is a stress rating only and functional operation of the device at these or any other conditions above those indicated in the operational sections of this specification is not implied. Exposure to absolute maximum rating conditions for extended periods may affect device reliability.*

D.C. CHARACTERISTICS (T_A = 0°C to 70°C, V_{CC} = +5V ±10%)

Symbol	Parameter	Min.	Max.	Units	Test Conditions
V_{IL}	Input Low Voltage	−0.5	+0.8	V	
V_{IH}	Input High Voltage	2.0	V_{CC} +0.5	V	
V_{OL}	Output Low Voltage		0.45	V	I_{OL} = 2.0 mA
V_{OH}	Output High Voltage	2.4		V	I_{OH} = −400 μA
I_{CC}	Power Supply Current		475	mA	T_A = 25°C
I_{LI}	Input Leakage Current		±10	μA	$0V \leq V_{IN} \leq V_{CC}$
I_{LO}	Output Leakage Current		±10	μA	$0.45V \leq V_{OUT} \leq V_{CC}$
V_{CL}	Clock Input Low Voltage	−0.5	+0.6	V	
V_{CH}	Clock Input High Voltage	3.9	V_{CC} + 1.0	V	
C_{IN}	Capacitance of Inputs		10	pF	fc = 1 MHz
C_{IO}	Capacitance of I/O Buffer (AD0-15, A_{16}–A_{19}, BHE, S2-S0, RQ/GT) and CLK		15	pF	fc = 1 MHz
C_{OUT}	Capacitance of Outputs BUSY, INT		10	pF	fc = 1 MHz

A.C. CHARACTERISTICS (T_A = 0°C to 70°C, V_{CC} = +5V ±10%)

TIMING REQUIREMENTS

Symbol	Parameter	Min.	Max.	Units	Test Conditions
TCLCL	CLK Cycle Period	200	500	ns	
TCLCH	CLK Low Time	(⅔ TCLCL) − 15		ns	
TCHCL	CLK High Time	(⅓ TCLCL) + 2		ns	
TCH1CH2	CLK Rise Time		10	ns	From 1.0V to 3.5V
TCL2CL1	CLK Fall Time		10	ns	From 3.5V to 1.0V
TDVCL	Data In Setup Time	30		ns	
TCLDX	Data In Hold Time	10		ns	
TRYHCH	READY Setup Time	(⅔ TCLCL) − 15		ns	
TCHRYX	READY Hold Time	30		ns	
TRYLCL	READY Inactive to CLK (See Note 3)	−8		ns	
TGVCH	RQ/GT Setup Time	30		ns	
TCHGX	RQ/GT Hold Time	40		ns	
TQVCL	QS0-1 Setup Time	30		ns	
TCLQX	QS0-1 Hold Time	10		ns	
TSACH	Status Active Setup Time	30		ns	
TSNCL	Status Inactive Setup Time	30		ns	
TILIH	Input Rise Time (Except CLK)		20	ns	From 0.8V to 2.0V
TIHIL	Input Fall Time (Except CLK)		12	ns	From 2.0V to 0.8V

A.C. CHARACTERISTICS (Continued)

TIMING RESPONSES

Symbol	Parameter	Min.	Max.	Units	Test Conditions
TCLML	Command Active Delay (See Note 1)	10	35	ns	
TCLMH	Command Inactive Delay (See Note 1)	10	35	ns	
TRYHSH	Ready Active to Status Passive (See Note 2)		110	ns	
TCHSV	Status Active Delay	10	110	ns	
TCLSH	Status Inactive Delay	10	130	ns	
TCLAV	Address Valid Delay	10	110	ns	
TCLAX	Address Hold Time	10		ns	
TCLAZ	Address Float Delay	TCLAX	80	ns	
TSVLH	Status Valid to ALE High (See Note 1)		15	ns	
TCLLH	CLK Low to ALE Valid (See Note 1)		15	ns	
TCHLL	ALE Inactive Delay (See Note 1)		15	ns	C_L = 20–100 pF for all
TCLDV	Data Valid Delay	10	110	ns	8087 Outputs (in addition
TCHDX	Data Hold Time	10		ns	to 8087 self-load)
TCVNV	Control Active Delay (See Note 1)	5	45	ns	
TCVNX	Control Inactive Delay (See Note 1)	10	45	ns	
TCHBV	BUSY and INT Valid Delay	10	150	ns	
TCHDTL	Direction Control Active Delay (See Note 1)		50	ns	
TCHDTH	Direction Control Inactive Delay (See Note 1)		30	ns	
TCLGL	RQ/GT Active Delay	0	85	ns	C_L = 40 pF (in
TCLGH	RQ/GT Inactive Delay	0	85	ns	addition to 8087 self-load)
TOLOH	Output Rise Time		20	ns	From 0.8V to 2.0V
TOHOL	Output Fall Time		12	ns	From 2.0V to 0.8V

NOTES:
1. Signal at 8284A or 8288 shown for reference only.
2. Applies only to T_3 and wait states.
3. Applies only to T_2 state (8 ns into T_3).

A.C. TESTING INPUT, OUTPUT WAVEFORM

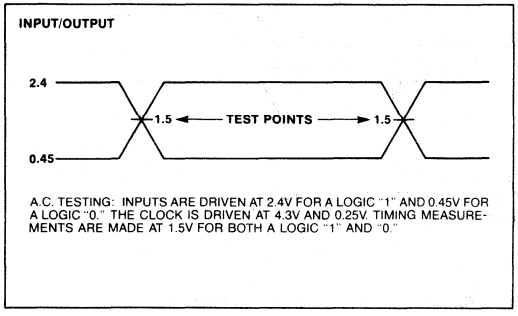

A.C. TESTING: INPUTS ARE DRIVEN AT 2.4V FOR A LOGIC "1" AND 0.45V FOR A LOGIC "0." THE CLOCK IS DRIVEN AT 4.3V AND 0.25V. TIMING MEASUREMENTS ARE MADE AT 1.5V FOR BOTH A LOGIC "1" AND "0."

A.C. TESTING LOAD CIRCUIT

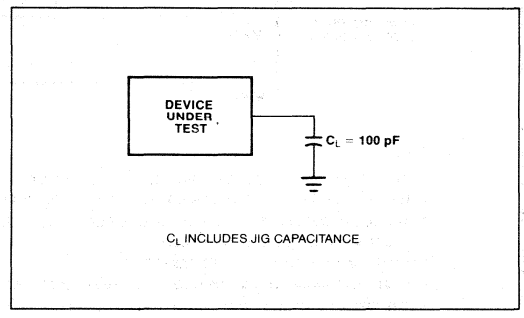

C_L INCLUDES JIG CAPACITANCE

WAVEFORMS

MASTER MODE

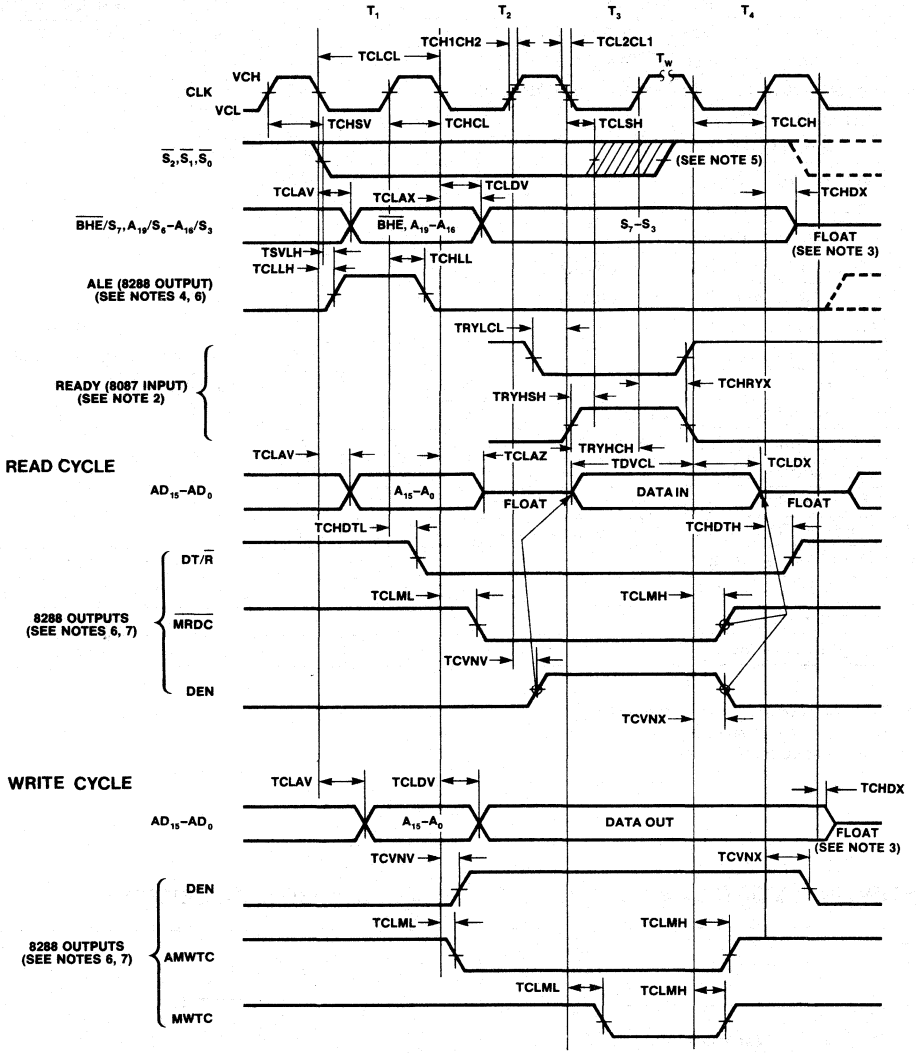

NOTES:

1. ALL SIGNALS SWITCH BETWEEN V_{OL} AND V_{OH} UNLESS OTHERWISE SPECIFIED.
2. READY IS SAMPLED NEAR THE END OF T_2, T_3 AND T_W TO DETERMINE IF T_W MACHINE STATES ARE TO BE INSERTED.
3. THE LOCAL BUS FLOATS ONLY IF THE 8087 IS RETURNING CONTROL TO THE 8086/8088.
4. ALE RISES AT LATER OF (TSVLH, TCLLH).
5. STATUS INACTIVE IN STATE JUST PRIOR TO T_4.
6. SIGNALS AT 8284A OR 8288 ARE SHOWN FOR REFERENCE ONLY.
7. THE ISSUANCE OF 8288 COMMAND AND CONTROL SIGNALS ($\overline{MRDC}$, $\overline{MWTC}$, $\overline{AMWC}$ AND DEN) LAGS THE ACTIVE HIGH 8288 CEN.
8. ALL TIMING MEASUREMENTS ARE MADE AT 1.5V UNLESS OTHERWISE NOTED.

WAVEFORMS (Continued)

PASSIVE MODE

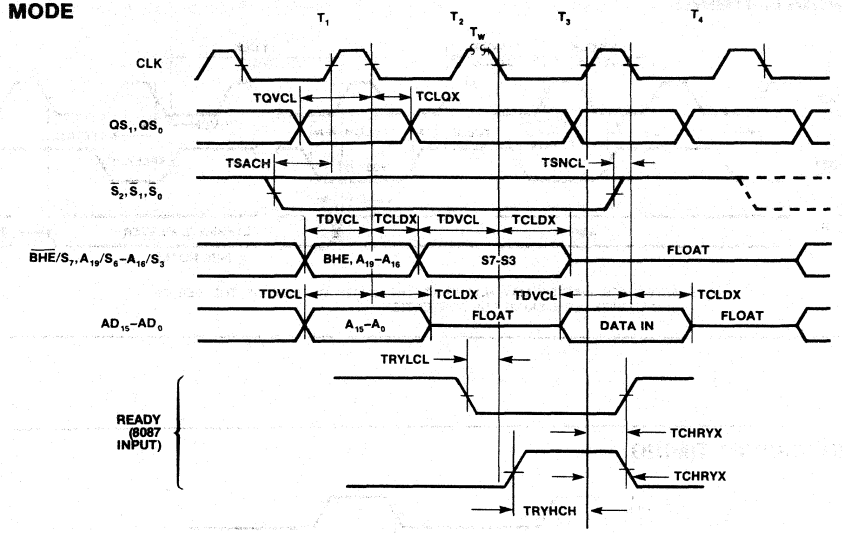

RESET TIMING

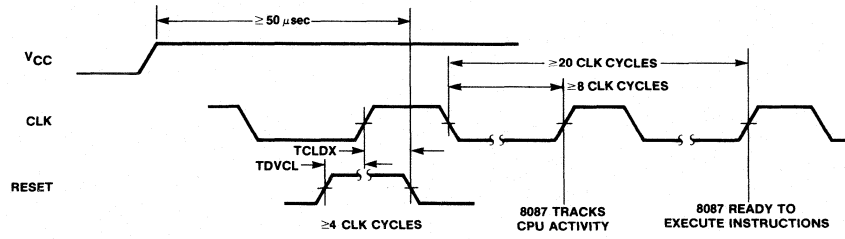

REQUEST/GRANT$_0$ TIMING

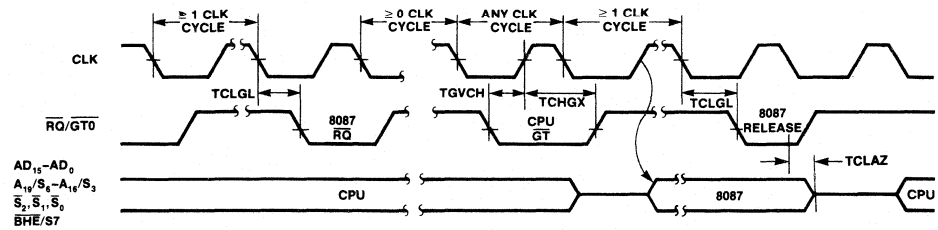

NOTE: THE CPU PROVIDES ACTIVE PULLUP OF $\overline{RQ}/\overline{GT0}$, SEE TCLGH SPEC.

WAVEFORMS (Continued)

REQUEST/GRANT$_1$ TIMING

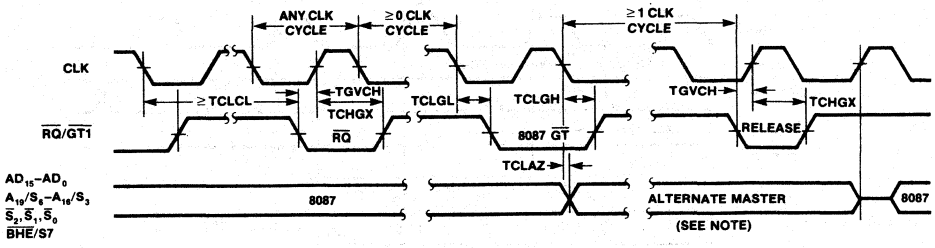

NOTE: ALTERNATE MASTER MAY NOT DRIVE THE BUSES OUTSIDE OF THE REGION SHOWN WITHOUT RISKING BUS CONTENTION.

BUSY AND INTERRUPT TIMING

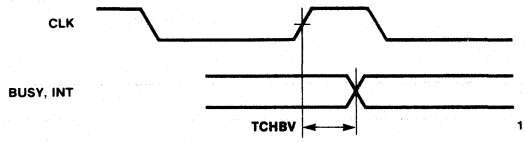

Table 5. 8087 Extensions to the 8086/8088 Instruction Set

	7 6 5 4 3 2 1 0	7 6 5 4 3 2 1 0	7 6 5 4 3 2 1 0	7 6 5 4 3 2 1 0
Data Transfer				
FLD = LOAD				
Integer/Real Memory to ST(0)	ESCAPE MF 1	MOD 0 0 0 R/M	(DISP-LO)	(DISP-HI)
Long Integer Memory to ST(0)	ESCAPE 1 1 1	MOD 1 0 1 R/M	(DISP-LO)	(DISP-HI)
Temporary Real Memory to ST(0)	ESCAPE 0 1 1	MOD 1 0 1 R/M	(DISP-LO)	(DISP-HI)
BCD Memory to ST(0)	ESCAPE 1 1 1	MOD 1 0 0 R/M	(DISP-LO)	(DISP-HI)
ST(i) to ST(0)	ESCAPE 0 0 1	1 1 0 0 0 ST(i)		
FST = STORE				
ST(0) to Integer/Real Memory	ESCAPE MF 1	MOD 0 1 0 R/M	(DISP-LO)	(DISP-HI)
ST(0) to ST(i)	ESCAPE 1 0 1	1 1 0 1 0 ST(i)		
FSTP = STORE AND POP				
ST(0) to Integer/Real Memory	ESCAPE MF 1	MOD 0 1 1 R/M	(DISP-LO)	(DISP-HI)
ST(0) to Long Integer Memory	ESCAPE 1 1 1	MOD 1 1 1 R/M	(DISP-LO)	(DISP-HI)
ST(0) to Temporary Real Memory	ESCAPE 0 1 1	MOD 1 1 1 R/M	(DISP-LO)	(DISP-HI)
ST(0) to BCD Memory	ESCAPE 1 1 1	MOD 1 1 0 R/M	(DISP-LO)	(DISP-HI)
ST(0) to ST(i)	ESCAPE 1 0 1	1 1 0 1 1 ST(i)		
FXCH = Exchange ST(i) and ST(0)	ESCAPE 0 0 1	1 1 0 0 1 ST(i)		
Comparison				
FCOM = Compare				
Integer/Real Memory to ST(0)	ESCAPE MF 0	MOD 0 1 0 R/M	(DISP-LO)	(DISP-HI)
ST(i) to ST(0)	ESCAPE 0 0 0	1 1 0 1 0 ST(i)		
FCOMP = Compare and Pop				
Integer/Real Memory to ST(0)	ESCAPE MF 0	MOD 0 1 1 R/M	(DISP-LO)	(DISP-HI)
ST(i) to ST(0)	ESCAPE 0 0 0	1 1 0 1 1 ST(i)		
FCOMPP = Compare ST(1) to ST(0) and Pop Twice	ESCAPE 1 1 0	1 1 0 1 1 0 0 1		
FTST = Test ST(0)	ESCAPE 0 0 1	1 1 1 0 0 1 0 0		
FXAM = Examine ST(0)	ESCAPE 0 0 1	1 1 1 0 0 1 0 1		

Mnemonics © Intel 1980

Table 5. 8087 Extensions to the 8086/8088 Instruction Set (Continued)

Arithmetic	7	6	5	4	3	2	1	0	7	6	5	4	3	2	1	0	7	6	5	4	3	2	1	0	7	6	5	4	3	2	1	0
FADD = Addition																																
Integer/Real Memory with ST(0)	ESCAPE					MF		0	MOD		0	0	0	R/M			(DISP-LO)								(DISP-HI)							
ST(i) and ST(0)	ESCAPE					d	P	0	1	1	0	0	0	ST(i)																		
FSUB = Subtraction																																
Integer/Real Memory with ST(0)	ESCAPE					MF		0	MOD		1	0	R	R/M			(DISP-LO)								(DISP-HI)							
ST(i) and ST(0)	ESCAPE					d	P	0	1	1	1	0	R	R/M																		
FMUL = Multiplication																																
Integer/Real Memory with ST(0)	ESCAPE					MF		0	MOD		0	0	1	R/M			(DISP-LO)								(DISP-HI)							
ST(i) and ST(0)	ESCAPE					d	P	0	1	1	0	0	1	R/M																		
FDIV = Division																																
Integer/Real Memory with ST(0)	ESCAPE					MF		0	MOD		1	1	R	R/M			(DISP-LO)								(DISP-HI)							
ST(i) and ST(0)	ESCAPE					d	P	0	1	1	1	1	R	R/M																		
FSQRT = Square Root of ST(0)	ESCAPE					0	0	1	1	1	1	1	1	0	1	0																
FSCALE = Scale ST(0) by ST(1)	ESCAPE					0	0	1	1	1	1	1	1	1	0	1																
FPREM = Partial Remainder of ST(0) ÷ ST(1)	ESCAPE					0	0	1	1	1	1	1	1	0	0	0																
FRNDINT = Round ST(0) to Integer	ESCAPE					0	0	1	1	1	1	1	1	1	0	0																
FXTRACT = Extract Components of ST(0)	ESCAPE					0	0	1	1	1	1	1	0	1	0	0																
FABS = Absolute Value of ST(0)	ESCAPE					0	0	1	1	1	1	0	0	0	0	1																
FCHS = Change Sign of ST(0)	ESCAPE					0	0	1	1	1	1	0	0	0	0	0																
Transcendental																																
FPTAN = Partial Tangent of ST(0)	ESCAPE					0	0	1	1	1	1	1	0	0	1	0																
FPATAN = Partial Arctangent of ST(0) ÷ ST(1)	ESCAPE					0	0	1	1	1	1	1	0	0	1	1																
F2XM1 = $2^{ST(0)-1}$	ESCAPE					0	0	1	1	1	1	1	0	0	0	0																
FYL2X = ST(1) · Log_2 [ST(0)]	ESCAPE					0	0	1	1	1	1	1	0	0	0	1																
FYL2XP1 = ST(1) · Log_2 [ST(0) + 1]	ESCAPE					0	0	1	1	1	1	1	1	0	0	1																
Constants																																
FLDZ = LOAD + 0.0 into ST(0)	ESCAPE					0	0	1	1	1	1	0	1	1	1	0																
FLD1 = LOAD + 1.0 into ST(0)	ESCAPE					0	0	1	1	1	1	0	1	0	0	0																
FLDPI = LOAD π into ST(0)	ESCAPE					0	0	1	1	1	1	0	1	0	1	1																
FLDL2T = LOAD log_2 10 into ST(0)	ESCAPE					0	0	1	1	1	1	0	1	0	0	1																
FLDL2E = LOAD log_2 e into ST(0)	ESCAPE					0	0	1	1	1	1	0	1	0	1	0																
FLDLG2 = LOAD log_{10} 2 into ST(0)	ESCAPE					0	0	1	1	1	1	0	1	1	0	0																
FLDLN2 = LOAD log_e 2 into ST(0)	ESCAPE					0	0	1	1	1	1	0	1	1	0	1																

Mnemonics © Intel 1980

Table 5. 8087 Extensions to the 8086/8088 Instruction Set (Continued)

	7 6 5 4 3 2 1 0	7 6 5 4 3 2 1 0	7 6 5 4 3 2 1 0	7 6 5 4 3 2 1 0
Processor Control				
FINIT = Initialize NDP	ESCAPE 0 1 1	1 1 1 0 0 0 1 1		
FENI = Enable Interrupts	ESCAPE 0 1 1	1 1 1 0 0 0 0 0		
FDISI = Disable Interrupts	ESCAPE 0 1 1	1 1 1 0 0 0 0 1		
FLDCW = Load Control Word	ESCAPE 0 0 1	MOD 1 0 1 R/M	(DISP-LO)	(DISP-HI)
FSTCW = Store Control Word	ESCAPE 0 0 1	MOD 1 1 1 R/M	(DISP-LO)	(DISP-HI)
FSTSW = Store Status Word	ESCAPE 1 0 1	MOD 1 1 1 R/M	(DISP-LO)	(DISP-HI)
FCLEX = Clear Exceptions	ESCAPE 0 1 1	1 1 1 0 0 0 1 0		
FSTENV = Store Environment	ESCAPE 0 0 1	MOD 1 1 0 R/M	(DISP-LO)	(DISP-HI)
FLDENV = Load Environment	ESCAPE 0 0 1	MOD 1 0 0 R/M	(DISP-LO)	(DISP-HI)
FSAVE = Save State	ESCAPE 1 0 1	MOD 1 1 0 R/M	(DISP-LO)	(DISP-HI)
FRSTOR = Restore State	ESCAPE 1 0 1	MOD 1 0 0 R/M	(DISP-LO)	(DISP-HI)
FINCSTP = Increment Stack Pointer	ESCAPE 0 0 1	1 1 1 1 0 1 1 1		
FDECSTP = Decrement Stack Pointer	ESCAPE 0 0 1	1 1 1 1 0 1 1 0		
FFREE = Free ST(i)	ESCAPE 1 0 1	1 1 0 0 0 ST(i)		
FNOP = No Operation	ESCAPE 0 0 1	1 1 0 1 0 0 0 0		
FWAIT = CPU Wait for NDP	1 0 0 1 1 0 1 1			

FOOTNOTES:

if mod = 00 then DISP = 0*, disp-low and disp-high are absent
if mod = 01 then DISP = disp-low sign-extended to 16-bits, disp-high is absent
if mod = 10 then DISP = disp-high; disp-low
if mod = 11 then r/m is treated as an ST(i) field

if r/m = 000 then EA = (BX) + (SI) + DISP
if r/m = 001 then EA = (BX) + (DI) + DISP
if r/m = 010 then EA = (BP) + (SI) + DISP
if r/m = 011 then EA = (BP) + (DI) + DISP
if r/m = 100 then EA = (SI) + DISP
if r/m = 101 then EA = (DI) + DISP
if r/m = 110 then EA = (BP) + DISP*
if r/m = 111 then EA = (BX) + DISP

*except if mod = 000 and r/m = 110 then EA = disp-high: disp-low.

MF = Memory Format
00 — 32-bit Real
01 — 32-bit Integer
10 — 64-bit Real
11 — 16-bit Integer

ST(0) = Current stack top
ST(i) = i^{th} register below stack top

d = Destination
0 — Destination is ST(0)
1 — Destination is ST(i)

P = Pop
0 — No pop
1 — Pop ST(0)

R = Reverse: When d = 1 reverse the sense of R.
0 — Destination (op) Source
1 — Source (op) Destination

For **FSQRT:** $-0 \leq ST(0) \leq +\infty$
For **FSCALE:** $-2^{15} \leq ST(1) < +2^{15}$ and ST(1) integer
For **F2XM1:** $0 \leq ST(0) \leq 2^{-1}$
For **FYL2X:** $0 < ST(0) < \infty$
$-\infty < ST(1) < +\infty$
For **FYL2XP1:** $0 \leq |ST(0)| < (2 - \sqrt{2})/2$
$-\infty < ST(1) < \infty$
For **FPTAN:** $0 \leq ST(0) < \pi/4$
For **FPATAN:** $0 \leq ST(0) < ST(1) < +\infty$

Mnemonics © Intel 1980

PRELIMINARY

iAPX 86/30
iAPX 88/30
OPERATING SYSTEM PROCESSORS

80130-3

- **High-Performance 2-Chip Data Processors Containing Operating System Primitives**
- **Standard iAPX 86/10, 88/10 Instruction Set Plus Task Management, Interrupt Management, Message Passing, Synchronization and Memory Allocation Primitives**
- **Fully Extendable To and Compatible With iRMX 86**
- **Supports Five Operating System Data Types: Jobs, Tasks, Segments, Mailboxes, Regions**
- **35 Operating System Primitives**
- **Built-In Operating System Timers and Interrupt Control Logic Expandable From 8 to 57 Interrupts**
- **8086/8087/8088 Compatible At Up To 8 MHz Without Wait States**
- **MULTIBUS System Compatible Interface**

The Intel iAPX 86/30 and iAPX 88/30 are two-chip microprocessors offering general-purpose CPU (8086) instructions combined with real-time operating system support. They provide a foundation for multiprogramming and multitasking applications. The iAPX 86/30 consists of an iAPX 86/10 (16-bit 8086 CPU) and an Operating System Firmware (OSF) component (80130). The 88/30 consists of the OSF and an iAPX 88/10 (8-bit 8088 CPU).

Both components of the 86/30 and 88/30 are implemented in N-channel, depletion-load, silicon-gate technology (HMOS), and are housed in 40-pin packages. The 86/30 and 88/30 provide all the functions of the iAPX 86/10, 88/10 processors plus 35 operating system primitives, hardware support for eight interrupts, a system timer, a delay timer and a baud rate generator.

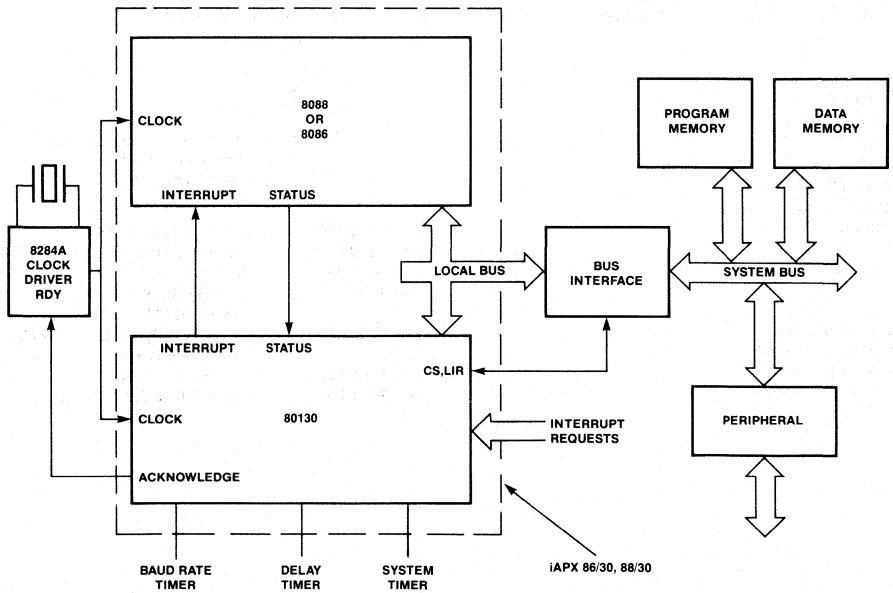

Figure 1. iAPX 86/30, 88/30 Block Diagram

Intel Corporation Assumes No Responsibilty for the Use of Any Circuitry Other Than Circuitry Embodied in an Intel Product. No Other Circuit Patent Licenses are Implied.
©INTEL CORPORATION, 1981.

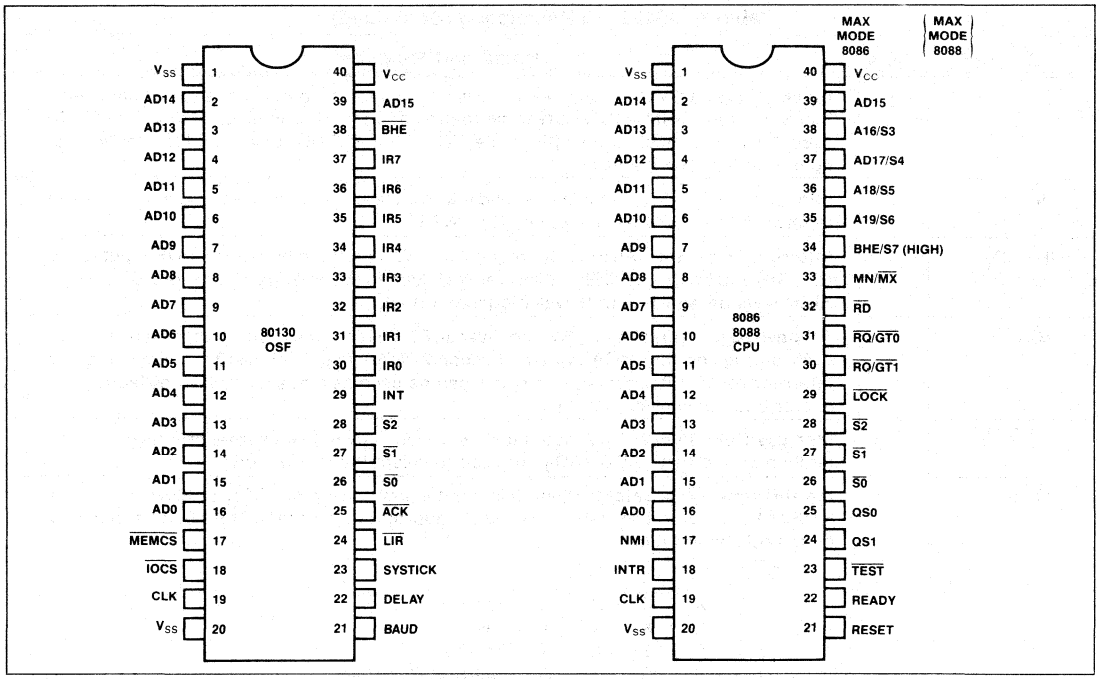

Figure 2. iAPX 86/30, 88/30 Pin Configuration

Table 1. 80130 Pin Description

Symbol	Type	Name and Function
AD_{15}–AD_0	I/O	**Address Data:** These pins constitute the time multiplexed memory address (T_1) and data (T_2, T_3, T_W, T_4) bus. These lines are active HIGH. The address presented during T_1 of a bus cycle will be latched internally and interpreted as an 80130 internal address if MEMCS or IOCS is active for the invoked primitives. The 80130 pins float whenever it is not chip selected, and drive these pins only during T_2–T_4 of a read cycle and T_1 of an INTA cycle.
$\overline{BHE}/S_7$		**Bus High Enable:** The 80130 uses the $\overline{BHE}$ signal from the processor to determine whether to respond with data on the upper or lower data pins, or both. The signal is active LOW. $\overline{BHE}$ is latched by the 80130 on the trailing edge of ALE. It controls the 80130 output data as shown. $\overline{BHE}$ A_0 0 0 Word on AD_{15}–AD_0 0 1 Upper byte on AD_{15}–AD_0 1 0 Lower byte on AD_7–AD_0 1 1 Upper byte on AD_7–AD_0
$\overline{S_2}, \overline{S_1}, \overline{S_0}$	I	**Status:** For the 80130, the status pins are used as inputs only. 80130 encoding follows: $\overline{S_2}$ $\overline{S_1}$ $\overline{S_0}$ 0 0 0 INTA 0 0 1 IORD 0 1 0 IOWR 0 1 1 Passive 1 0 0 Instruction fetch 1 0 1 MEMRD 1 1 X Passive

Table 1. 80130 Pin Description (Continued)

Symbol	Type	Name and Function
CLK	I	**Clock:** The system clock provides the basic timing for the processor and bus controller. It is asymmetric with a 33% duty cycle to provide optimized internal timing. The 80130 uses the system clock as an input to the SYSTICK and BAUD timers and to synchronize operation with the host CPU.
INT	O	**Interrupt:** INT is HIGH whenever a valid interrupt request is asserted. It is normally used to interrupt the CPU by connecting it to INTR.
IR_7–IR_0	I	**Interrupt Requests:** An interrupt request can be generated by raising an IR input (LOW to HIGH) and holding it HIGH until it is acknowledged (Edge-Triggered Mode), or just by a HIGH level on an IR input (Level-Triggered Mode).
$\overline{ACK}$	O	**Acknowledge:** This line is LOW whenever an 80130 resource is being accessed. It is also LOW during the first INTA cycle and second INTA cycle if the 80130 is supplying the interrupt vector information. This signal can be used as a bus ready acknowledgement and/or bus transceiver control.
$\overline{MEMCS}$	I	**Memory Chip Select:** This input must be driven LOW when a kernel primitive is being fetched by the CPU. AD_{13}–AD_0 are used to select the instruction.
$\overline{IOCS}$	I	**Input/Output Chip Select:** When this input is low, during an IORD or IOWR cycle, the 80130's kernel primitives are accessing the appropriate peripheral function as specified by the following table: $\overline{BHE}$ A_3 A_2 A_1 A_0 0 X X X X Passive X X X X 1 Passive X 0 1 X X Passive 1 0 0 X 0 Interrupt Controller 1 1 0 0 0 Systick Timer 1 1 0 1 0 Delay Counter 1 1 1 0 0 Baud Rate Timer 1 1 1 1 0 Timer Control
$\overline{LIR}$	O	**Local Bus Interrupt Request:** This signal is LOW when the interrupt request is for a non-slave input or slave input programmed as being a local slave.
V_{CC}		**Power:** V_{CC} is the +5V supply pin.
V_{SS}		**Ground:** V_{SS} is the ground pin.
SYSTICK	O	**System Clock Tick:** Timer 0 Output. Operating System Clock Reference. SYSTICK is normally wired to IR2 to implement operating system timing interrupt.
DELAY	O	**DELAY Timer:** Output of timer 1. Reserved by Intel Corporation for future use.
BAUD	O	**Baud Rate Generator:** 8254 Mode 3 compatible output. Output of 80130 Timer 2.

FUNCTIONAL DESCRIPTION

The increased performance and memory space of iAPX 86/10 and 88/10 microprocessors have proven sufficient to handle most of today's single-task or single-device control applications with performance to spare, and have led to the increased use of these microprocessors to control *multiple* tasks or devices in real-time. This trend has created a new challenge to designers—development of real-time, multitasking application systems and software. Examples of such systems include control systems that monitor and react to external events in real-time, multifunction desktop and personal computers, PABX equipment which constantly controls the telephone traffic in a multiphone office, file servers/disk subsystems controlling and coordinating multiple disks and multiple disk users, and transaction processing systems such as electronics funds transfer.

The iAPX 86/30, 88/30 Operating System Processors

The Intel® iAPX 86/30, 88/30 Operating System Processors (OSPs) were developed to help solve this

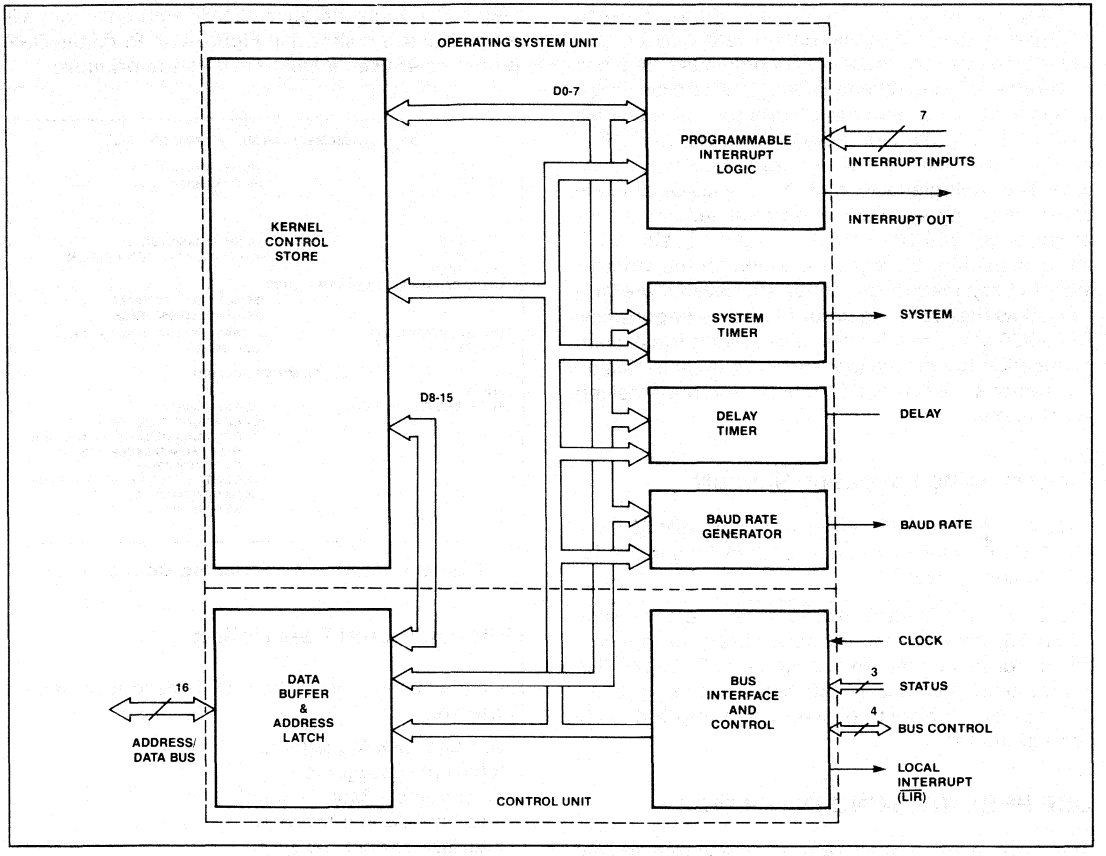

Figure 3. OSF Internal Block Diagram

problem. Their goal is to simplify the design of multitasking application systems by providing a well-defined, fully debugged set of operating system primitives implemented directly in the hardware, thereby removing the burden of designing multitasking operating system primitives from the application programmer.

Both the 86/30 and the 88/30 OSPs are two-chip sets consisting of a main processor, an 8086 or 8088 CPU, and the Intel 80130, Operating System Firmware component (OSF) (see Figure 1). The 80130 provides a set of multitasking kernel primitives, kernel control storage, and the additional support hardware, including system timers and interrupt control, required by these primitives. From the application programmer's viewpoint, the OSF extends the base iAPX 86, 88 architecture by providing 35 operating system primitive instructions, and supporting five new system data types, making the OSF a logical and easy-to-use architectural extension to iAPX 86, 88 system designs.

The OSP Approach

The OSP system data types (SDTs) and primitive instructions allocate, manage and share low-level processor resources in an efficient manner. For example, the OSP implements task context management (managing a task state image consisting of both hardware register set and software control information) for either the basic 86/10 context or the extended 86/20 (8086+8087) numerics context. The OSP manages the entire task state image both while the task is actively executing and while it is inactive. Tasks can be created, put to sleep for specified periods, suspended, executed to perform their functions, and dynamically deleted when their functions are complete.

The Operating System Processors support event-oriented systems designs. Each event may be processed by an individual responding task or along with other closely related events in a common task. External events and interrupts are processed by the OSP interrupt handler primitives using its built-in interrupt controller subsystem as they occur in real-time. The multiple tasks and the multiple events are coordinated by the OSP integral scheduler whose preemptive, priority-based scheduling algorithm and system timers organize and monitor the processing of every task to guarantee that events are processed as they occur in order of relative importance. The 86/30 also provides primitives for intertask communication (by mailboxes) and for mutual exclusion (by regions), essential functions for multitasking applications.

Programming Language Support

Programs for the OSP can be written in ASM 86/88 or PL/M 86/88, Intel's standard system languages for iAPX 86,88 systems.

The Operating System Processor Support Package (iOSP 86) provides an interface library for application programs written in any model of PL/M-86. This library also provides 80130 configuration and initialization support as well as complete user documentation.

OSF PROGRAMMING INTERFACE

The OSF provides 35 operating system kernel primitives which implement multitasking, interrupt management, free memory management, intertask communication and synchronization. Table 4 shows each primitive, and Table 5 gives the execution performance of typical primitives.

OSP primitives are executed by a combination of CPU and OSF (80130) activity. When an OSP primitive is called by an application program task, the iAPX CPU registers and stacks are used to perform the appropriate functions and relay the results to the application programs.

OSP Primitive Calling Sequences

A standard, stack-based, calling sequence is used to invoke the OSF primitives. Before a primitive is called, its operand parameters must be pushed on the task stack. The SI register is loaded with the offset of the last parameter on the stack. The entry code for the primitive is loaded into AX. The primitive invocation call is made with a CPU software interrupt (Table 4). A representative ASM86 sequence for calling a primitive is shown in Figure 4. In PL/M the OSP programmer uses a call to invoke the primitive.

```
                SAMPLE ASSEMBLY LANGUAGE PRIMITIVE CALL

PUSH P1                         ;PUSH PARAMETER 1
PUSH P2                         ;PUSH PARAMETER 2
 .                              ;  .  .  .
 .                              ;  .  .  .
 .                              ;  .  .  .
PUSH PN                         ;PUSH PARAMETER N
PUSH BP                         ;STACK CALLING CONVENTION
MOVE BP,SP
LEA SI,SS:NUM BYTES PARAM - 2[BP]
                                ;SS:SI POINTS TO FIRST
                                ;PARAMETER ON STACK
MOV AX, ENTRY CODE              ;AX SETS PRIMITIVE ENTRY CODE
INT 184                         ;OSF INTERRUPT

                        OSP PRIMITIVE INVOKED

POP BP
RET NUM BYTES PARAMS            ;POP PARAMETERS
                                ;CX CONTAINS EXCEPTION CODES
                                ;DL CONTAINS PARAMETER NUMBER
                                ;   THAT CAUSED EXCEPTION (IF
                                ;   CX IS NON ZERO)
                                ;AX CONTAINS WORD RETURN VALUE
                                ;ES:BX CONTAINS POINTER
                                ;   RETURN VALUE
```

Figure 4. ASM/86 OSP Calling Convention

OSP Functional Description

Each major function of the OSP is described below. These are:

- Job and Task Management
- Interrupt Management
- Free Memory Management
- Intertask Communication
- Intertask Synchronization
- Environmental Control

The system data Types (or SDTs) supported by the OSP are capitalized in the description. A short description of each SDT appears in Table 2.

JOB and TASK Management

Each OSP JOB is a controlled environment in which the applications program executes and the OSF system data types reside. Each individual application program is normally a separate OSP JOB, whether it has one initial task (the minimum) or multiple tasks. JOBs partition the system memory into pools. Each memory pool provides the storage areas in which the OSP will allocate TASK state images and other system data types created by the executing TASKs, and free memory for TASK working space. The OSP supports multiple executing TASKs within a JOB by managing the resources used by each, including the CPU registers, NPX registers, stacks, the system data types, and the available free memory space pool.

When a TASK is created, the OSP allocates memory (from the free memory of its JOB environment) for the TASK's stack and data area and initializes the additional TASK attributes such as the TASK priority level and its error handler location. (As an option, the caller of CREATE TASK may assign previously defined stack and data areas to the TASK.) Task priorities are integers between 0 and 255 (the lower the priority number the higher the scheduling priority of the TASK). Generally, priorities up to 128 will be assigned to TASKs which are to process interrupts. Priorities above 128 do not cause interrupts to be disabled, these priorities (129 to 255) are appropriate for non-interrupt TASKs. If an 8087 Numerics Processor Extension is used, the error recovery interrupt level assigned to it will have a higher priority than a TASK executing on it, so that error handling is performed correctly.

EXECUTION STATUS

A TASK has an execution status or execution state. The OSP provides five execution states: RUNNING, READY, ASLEEP, SUSPENDED, and ASLEEP-SUSPENDED.

— A TASK is RUNNING if it has control of the processor.

— A TASK is READY if it is not asleep, suspended, or asleep-suspended. For a TASK to become the running (executing) TASK, it must be the highest priority TASK in the ready state.

— A TASK is ASLEEP if it is waiting for a request to be granted or a timer event to occur. A TASK may put itself into the ASLEEP state.

— A TASK is SUSPENDED if it is placed there by another TASK or if it suspends itself. A TASK may have multiple suspensions, the count of suspensions is managed by the OSP as the TASK suspension depth.

— A TASK is ASLEEP-SUSPENDED if it is both waiting and suspended.

TASK attributes, the CPU register values, and the 8087 register values (if the 8087 is configured into the application) are maintained by the OSP in the TASK state image. Each TASK will have a unique TASK state image.

SCHEDULING

The OSP schedules the processor time among the various TASKs on the basis of priority. A TASK has an execution priority relative to all other TASKs in the system, which the OSP maintains for each TASK in its TASK state image. When a TASK of higher priority than the executing TASK becomes ready to execute, the OSP switches the control of the processor to the higher priority TASK. First, the OSP saves the outgoing (lower priority) TASK's state including CPU register values in its TASK state image. Then, it restores the CPU registers from the TASK state image of the incoming (higher priority) TASK. Finally, it causes the CPU to start or resume executing the higher priority TASK.

TASK scheduling is performed by the OSP. The OSP's priority-oriented preemptive scheduler determines which TASK executes by comparing their relative priorities. The scheduler insures that the highest priority TASK with a status of READY will execute. A TASK will continue to execute until an interrupt with a higher priority occurs, or until it requests unavailable resources, for which it is willing to wait, or until it makes specific resources available to a higher priority TASK waiting for those resources.

TASKs can become READY by receiving a message, receiving control, receiving an interrupt, or by timing out. The OSP always monitors the status of all the TASKs (and interrupts) in the system. Preemptive scheduling allows the system to be responsive to the external environment while only devoting CPU resources to TASKs with work to be performed.

TIMED WAIT

The OSP timer hardware facilities support timed waits and timeouts. Thus, in many primitives, a TASK can specify the length of time it is prepared to wait for an event to occur, for the desired resources to become available or for a message to be received at a MAILBOX. The timing interval (or System Tick) can be adjusted, with a lower limit of 1 millisecond.

APPLICATION CONTROL OF TASK EXECUTION

Programs may alter TASK execution status and priority dynamically. One TASK may suspend its own execution or the execution of another TASK for a period of time, then resume its execution later. Multiple suspensions are provided. A suspended TASK may be suspended again.

The eight OSP Job and TASK management primitives are:

CREATE JOB	Partitions system resources and creates a TASK execution environment.
CREATE TASK	Creates a TASK state image. Specifies the location of the TASK code instruction stream, its execution priority, and the other TASK attributes.

DELETE TASK	Deletes the TASK state image, removes the instruction stream from execution and deallocates stack resources. Does not delete INTERRUPT TASKS.
SUSPEND TASK	Suspends the specified TASK or, if already suspended, increments its suspension depth by one. Execute state is SUSPEND.
RESUME TASK	Decrements the TASK suspension depth by one. If the suspension depth is then zero, the primitive changes the task execution status to READY, or ASLEEP (if ASLEEP/SUSPENDED).
SLEEP	Places the requesting TASK in the ASLEEP state for a specified number of System Ticks. (The TICK interval can be configured down to 1 millisecond.)
SET PRIORITY	Alters the priority of a TASK.

Interrupt Management

The OSP supports up to 256 interrupt levels organized in an interrupt vector, and up to 57 external interrupt sources of which one is the NMI (Non-Maskable Interrupt). The OSP manages each interrupt level independently. The OSF INTERRUPT SUBSYSTEM provides two mechanisms for interrupt management: INTERRUPT HANDLERs and INTERRUPT TASKs. INTERRUPT HANDLERs disable all maskable interrupts and should be used only for servicing interrupts that require little processing time. Within an INTERRUPT HANDLER only certain OSF Interrupt Management primitives (DISABLE, ENTER INTERRUPT, EXIT INTERRUPT, GET LEVEL, SIGNAL INTERRUPT) and basic CPU instructions can be used, other OSP primitives cannot be. The INTERRUPT TASK approach permits all OSP primitives to be issued and masks only lower priority interrupts.

Work flow between an INTERRUPT HANDLER and an INTERRUPT TASK assigned to the same level is regulated with the SIGNAL INTERRUPT and WAIT INTERRUPT primitives. The flow is asynchronous. When an INTERRUPT HANDLER signals an INTERRUPT TASK, the INTERRUPT HANDLER becomes immediately available to process another interrupt. The number of interrupts (specified for the level) the INTERRUPT HANDLER can queue for the INTERRUPT TASK can be limited to the value specified in the SET INTERRUPT primitive. When the INTERRUPT TASK is finished processing, it issues a WAIT INTERRUPT primitive, and is immediately ready to process the queue of interrupts that the INTERRUPT HANDLER has built with repeated SIGNAL INTERRUPT primitives while the INTERRUPT TASK was processing. If there were no interrupts at the level, the queue is empty and the INTERRUPT TASK is SUSPENDED. See the Example (Figure 5) and Figures 6 and 7.

OSP external INTERRUPT LEVELs are directly related to internal TASK scheduling priorities. The OSP maintains a single list of priorities including both tasks and INTERRUPT LEVELs. The priority of the executing TASK automatically determines which interrupts are masked. Interrupts are managed by INTERRUPT LEVEL number. The OSP supports eight levels directly and may be extended by means of slave 8259As to a total of 57.

The nine Interrupt Management OSP primitives are:

DISABLE	Disables an external INTERRUPT LEVEL.
ENABLE	Enables an external INTERRUPT LEVEL.
ENTER INTERRUPT	Gives an Interrupt Handler its own data segment, separate from the data segment of the interrupted task.
EXIT INTERRUPT	Performs an "END of INTERRUPT" operation. Used by an INTERRUPT HANDLER which does not invoke an INTERRUPT TASK. Reenables interrupts, when the INTERRUPT HANDLER gives up control.
GET LEVEL	Returns the interrupt level number of the executing INTERRUPT HANDLER.
RESET INTERRUPT	Cancels the previous assignment made to an interrupt level by SET INTERRUPT primitive request. If an INTERRUPT TASK has been assigned, it is also deleted. The interrupt level is disabled.
SET INTERRUPT	Assigns an INTERRUPT HANDLER to an interrupt level and, optionally, an INTERRUPT TASK.

```
/*  CODE EXAMPLE A   INTERRUPT TASK TO KEEP TRACK OF TIME-OF-DAY
DECLARE SECOND$COUNT BYTE,
    MINUTE$COUNT BYTE,
    HOURS$COUNT BYTE;
TIME$TASK:  PROCEDURE;
    DECLARE TIME$EXCEPT$CODE WORD;
    AC$CYCLE$COUNT=0;
    CALL RQ$SET$INTERRUPT(AC$INTERRUPT$LEVEL, 01H),
        @AC$HANDLER,0,@TIME$EXCEPT$CODE);
    CALL RQ$RESUME$TASK(INIT$TASK$TOKEN,@TIME$EXCEPT$CODE);
    DO HOUR$COUNT=0 TO 23;
        DO MINUTE$COUNT=0 TO 59;
            DO SECOND$COUNT=0 TO 59;
                CALL RQ$WAIT$INTERRUPT(AC$INTERRUPT$LEVEL,
                    @TIME$EXCEPT$CODE);
                IF SECOND$COUNT MOD 5=0
                    THEN CALL PROTECTED$CRT$OUT(BEL);
                END;    /*  SECOND LOOP  */
            END;    /*  MINUTE LOOP  */
        END;    /*  HOUR LOOP  */
    CALL RQ$RESET$INTERRUPT(AC$INTERRUPT$LEVEL, @TIME$EXCEPT$CODE);
    END TIME$TASK;
/*  CODE EXAMPLE B     INTERRUPT HANDLER TO SUBDIVIDE A.C. SIGNAL BY 60.  */
DECLARE AC$CYCLE$COUNT BYTE;
AC$HANDLER:  PROCEDURE INTERRUPT 59;
    DECLARE AC$EXCEPT$CODE WORD;
    AC$CYCLE$COUNT=AC$CYCLE$COUNT +1;
    IF AC$CYCLE$COUNT>=60 THEN DO;
        AC$CYCLE$COUNT=0;
        CALL RQ$SIGNAL$INTERRUPT(AC$INTERRUPT$LEVEL,@AC$EXCEPT$CODE);
        END;
    END  AC$HANDLER;
```

Figure 5. OSP Examples

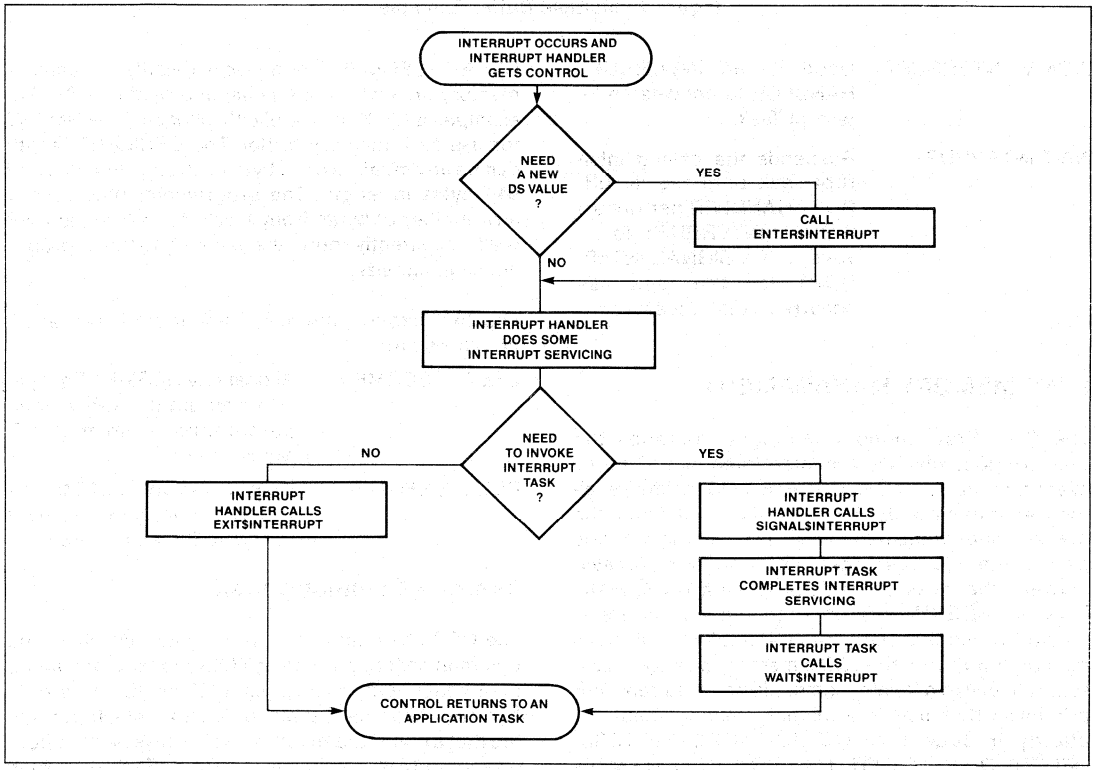

Figure 6. Interrupt Handling Flowchart

AFN-02059A

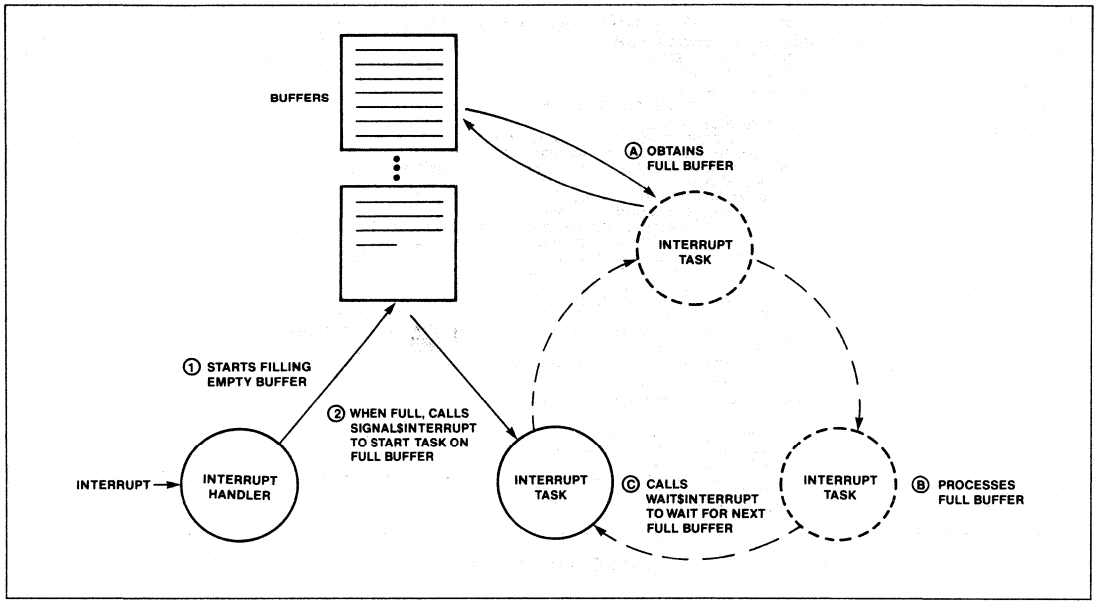

Figure 7. Multiple Buffer Example

SIGNAL INTERRUPT — Used by an INTERRUPT HANDLER to activate an Interrupt Task.

WAIT INTERRUPT — Suspends the calling Interrupt Task until the INTERRUPT HANDLER performs a SIGNAL INTERRUPT to invoke it. If a SIGNAL INTERRUPT for the task has occurred, it is processed.

FREE MEMORY MANAGEMENT

The OSP Free Memory Manager manages the memory pool which is allocated to each JOB for its execution needs. (The CREATE JOB primitive allocates the new JOB's memory pool from the memory pool of the parent JOB.) The memory pool is part of the JOB resources but is not yet allocated between the tasks of the JOB. When a TASK, MAILBOX, or REGION system data type structure is created within that JOB, the OSP implicitly allocates memory for it from the JOB's memory pool, so that a separate call to allocate memory is not required. OSP primitives that use free memory management implicitly include CREATE JOB, CREATE TASK, DELETE TASK, CREATE MAILBOX, DELETE MAILBOX, CREATE REGION, and DELETE REGION. The CREATE SEGMENT primitive explicitly allocates a memory area when one is needed by the TASK. For example, a TASK may explicitly allocate a SEGMENT for use as a memory buffer. The SEGMENT length can be any multiple of 16 bytes between 16 bytes and 64K bytes in length. The programmer may specify any number of bytes from 1 byte to 64 KB, the OSP will transparently round the value up to the appropriate segment size.

The two explicit memory allocation/deallocation primitives are:

CREATE SEGMENT — Allocates a SEGMENT of specified length (in 16-byte-long paragraphs) from the JOB Memory Pool.

DELETE SEGMENT — Deallocates the SEGMENT's memory area, and returns it to the JOB memory pool.

Intertask Communication

The OSP has built-in intertask synchronization and communication, permitting TASKs to pass and share information with each other. OSP MAILBOXes contain controlled handshaking facilities which guarantee that a *complete* message will always be sent from a sending TASK to a receiving TASK. Each MAILBOX consists of two interlocked queues, one of TASKs

and the other of Messages. Four OSP primitives for intertask synchronization and communication are provided:

CREATE MAILBOX	Creates intertask message exchange.
DELETE MAILBOX	Deletes an intertask message exchange.
RECEIVE MESSAGE	Calling TASK receives a message from the MAILBOX.
SEND MESSAGE	Calling TASK sends a message to the MAILBOX.

The CREATE MAILBOX primitive allocates a MAILBOX for use as an information exchange between TASKs. The OSP will post information at the MAILBOX in a FIFO (First-In First-Out) manner when a SEND MESSAGE instruction is issued. Similarily, a message is retrieved by the OSP if a TASK issues a RECEIVE MESSAGE primitive. The TASK which creates the MAILBOX may make it available to other TASKs to use.

If no message is available, the TASK attempting to receive a message may choose to wait for one or continue executing.

The queue management method for the task queue (FIFO or PRIORITY) determines which TASK in the MAILBOX TASK queue will receive a message from the MAILBOX. The method is specified in the CREATE MAILBOX primitive.

Intertask Synchronization and Mutual Exclusion

Mutual exclusion is essential to multiprogramming and multiprocessing systems. The REGION system data type implements mutual exclusion. A REGION is represented by a queue of TASKS waiting to use a resource which must be accessed by only one TASK at a time. The OSP provides primitives to use REGIONs to manage mutually exclusive data and resources. Both critical code sections and shared data structures can be protected by these primitives from simultaneous use by more than one task. REGIONs support both FIFO (First-In First-Out) or Priority queueing disciplines for the TASKS seeking to enter the REGION. The REGION SDT can also be used to implement software locks.

Multiple REGIONs are allowed, and are automatically exited in the reverse order of entry. While in a REGION, a TASK cannot be suspended by itself or any other TASK, and thereby avoids deadlock.

There are five OSP primitives for mutual exclusion:

CREATE REGION	Create a REGION (lock).
SEND CONTROL	Give up the REGION.
ACCEPT CONTROL	Request the REGION, but do not wait if it is not available.
RECEIVE CONTROL	Request a REGION, wait if not immediately available.
DELETE REGION	Delete a REGION.

The OSP also provides dynamic priority adjustment for TASKs within priority REGIONs: If a higher-priority TASK issues a RECEIVE CONTROL primitive, while a (lower-priority) TASK has the use of the same REGION, the lower-priority TASK will be transparently, and temporarily, elevated to the waiting TASK's priority until it relinquishes the REGION via SEND CONTROL. At that point, since it is no longer using the critical resource, the TASK will have its normal priority restored.

OSP Control Facilities

The OSP also includes system primitives that provide both control and customization capabilities to a multitasking system. These primitives are used to control the deletion of SDTs and the recovery of free memory in a system, to allow interrogation of operating system status, and to provide uniform means of adding user SDTs and type managers.

DELETION CONTROL

Deletion of each OSP system data type is explicitly controlled by the applications programmer by setting a deletion attribute for that structure. For example, if a SEGMENT is to be kept in memory until DMA activity is completed, its deletion attribute should be disabled. Each TASK, MAILBOX, REGION, and SEGMENT SDT is created with its deletion attribute enabled (i.e., they may be deleted). Two OSP primitives control the deletion attribute: ENABLE DELETION and DISABLE DELETION.

ENVIRONMENTAL CONTROL

The OSP provides inquiry and control operations which help the user interrogate the application environment and implement flexible exception handling. These features aid in run-time decision making and in application error processing and recovery. There are five OSP environmental control primitives.

OS EXTENSIONS

The OSP architecture is defined to allow new user-defined System Data Types and the primitives to manipulate them to be added to OSP capabilities

provided by the built-in System Data Types. The type managers created for the user-defined SDTs are called user OS extensions and are installed in the system by the SET OS EXTENSION primitive. Once installed, the functions of the type manager may be invoked with user primitives conforming to the OSP interface. For well-structured extended architectures, each OS extension should support a separate user-defined system data type, and every OS extension should provide the same calling sequence and program interface for the user as is provided for a built-in SDT. The type manager for the extension would be written to suit the needs of the application. OSP interrupt vector entries (224–255) are reserved for user OS extensions and are not used by the OSP. After assigning an interrupt number to the extension, the extension user may then call it with the standard OSP call sequence (Figure 4), and the unique software interrupt number assigned to the extension.

ENABLE DELETION	Allows a specific SEGMENT, TASK, MAILBOX, or REGION SDT to be deleted.
DISABLE DELETION	Prevents a specific SEGMENT, TASK, MAILBOX, or REGION SDT from being deleted.
GET TYPE	Given a token for an instance of a system data type, returns the type code.
GET TASK TOKENS	Returns to the caller information about the current task environment.
GET EXCEPTION HANDLER	Returns information about the calling TASK's current information handler: its address, and when it is used.
SET EXCEPTION HANDLER	Provides the address and usage of an exception handler for a TASK.
SET OS EXTENSION	Modifies one of the interrupt vector entries reserved for OS extensions (224–255) to point to a user OS extension procedure.
SIGNAL EXCEPTION	For use in OS extension error processing.

EXCEPTION HANDLING

The OSP supports exception handlers. These are similar to CPU exception handlers such as OVERFLOW and ILLEGAL OPERATION. Their purpose is to allow the OSP primitives to report parameter errors in primitive calls, and errors in primitive usage. Exception handling procedures are flexible and can be individually programmed by the application. In general, an exception handler if called will perform one or more of the following functions:

—Log the Error.
—Delete/Suspend the Task that caused the exception.
—Ignore the error, presumably because it is not serious.

An EXCEPTION HANDLER is written as a procedure. If PLM/86 is used, the "compact," "medium" or "large" model of computation should be specified for the compilation of the program. The mode in which the EXCEPTION HANDLER operates may be specified in the SET EXCEPTION HANDLER primitive. The return information from a primitive call is shown in Figure 4. CX is used to return standard system error conditions. Table 7 shows a list of these conditions, using the *default* EXCEPTION HANDLER of the OSP.

HARDWARE DESCRIPTION

The 80130 operates in a closely coupled mode with the iAPX 86/10 or 88/10 CPU. The 80130 resides on the CPU local multiplexed bus (Figure 8). The main processor is always configured for maximum mode operation. The 80130 automatically selects between its 88/30 and 86/30 operating modes.

The 80130 used in the 86/30 configuration, as shown in Figure 8 (or a similar 88/30 configuration), operates at both 5 and 8 MHz without requiring processor wait states. Wait state memories are fully supported, however. The 80130 may be configured with both an 8087 NDX and an 8089 IOP, and provides full context control over the 8087.

The 80130 (shown in Figure 3) is internally divided into a control unit (CU) and operating system unit (OSU). The OSU contains facilities for OSP kernel support including the system timers for scheduling and timing waits, and the interrupt controller for interrupt management support.

iAPX 86/30, iAPX 88/30 System Configuration

The 80130 is both I/O and memory mapped to the local CPU bus. The CPU's status (S_0–S_2) is decoded along with IOCS (with BHE and A_3–A_0) or MEMCS (with A_{13}–A_0). The pins are internally latched. See Table 1 for the decoding of these lines.

Memory Mapping

Address lines A_{19}–A_{14} can be used to form MEMCS/ since the 80130's memory-mapped portion is aligned along a 16K-byte boundry. The 80130 can reside on any 16K-byte boundry excluding the highest (FC000H-FFFFFH) and lowest (00000H-003FFH). The 80130 control store code is position-independent except as limited above, in order to make it compatible with many decoding logic designs. A_{13}–A_0 are decoded by the 80130's kernel control store.

I/O Mapping

The I/O-mapped portion of the 80130 must be aligned along a 16-byte boundry. Address lines A_{15}–A_4 should be used to form IOCS/.

System Performance

The approximate performance of representitive OSP primitives is given in Table 5. These times are shown for a typical iAPX 86/30 implementation with an 8 MHz clock. These execution times are very comparable to the execution times of similar functions in minicomputers (where available) and are an order of magnitude faster than previous generation microprocessors.

Initialization

Both application system initialization and OSP-specific initialization/configuration are required to use the OSP. Configuration is based on a "database" provided by the user to the iOSP 86 support package. The OSP-specific initialization and configuration information area is assigned to a user memory address adjacent to the 80130's memory-mapped location. (See Application Note 130 for further details.) The configuration data defines whether 8087 support is configured in the system, specifies if slave 8259A interrupt controllers are used in addition to the 80130, and sets the operating system time base (Tick Interval). Also located in the configuration area are the exception handler control parameters, the address location of the (separate) application system configuration area and the OSP extensions in use. The OSP application system configuration area may be located anywhere in the user memory and must include the starting address of the application instruction code to be executed, plus the locations of the RAM memory blocks to be managed by the OSP free memory manager. Complete application system support and the required 80130 configuration support are provided by the iAPX 86/30 and iAPX 88/30 OPERATING SYSTEM PROCESSOR SUPPORT PACKAGE (iOSP 86).

RAM Requirements

The OSP manages its own interrupt vector, which is assigned to low RAM memory. Working RAM storage is required as stack space and data area. The memory space must be allocated in user RAM.

OSP interrupt vector memory locations 0H–3FFH must be RAM based. The OSP requires 2 bytes of allocated RAM. The processor working storage is dynamically allocated from free memory. Approximately 300 bytes of stack should be allocated for each OSP task.

TYPICAL SYSTEM CONFIGURATION

Figure 8 shows the processing cluster of a "typical" iAPX 86/30 or iAPX 88/30 OSP system. Not shown are subsystems likely to vary with the application. The configuration includes an 8086 (or 8088) operating in maximum mode, an 8284A clock generator and an 8288 system controller. Note that the 80130 is located on the CPU side of any latches or transceivers. See Intel Application Note 130 for further details on configuration.

OSP Timers

The OSP Timers are connected to the lower half of the data bus and are addressed at even addresses. The timers are read as two successive bytes, always LSB followed by MSB. The MSB is always latched on a read operation and remains latched until read. Timers are not gatable.

Baud Rate Generator

The baud rate generator is 8254 compatible (square wave mode 3). Its output, BAUD, is initially high and remains high until the Count Register is loaded. The first falling edge of the clock after the Count Register is loaded causes the transfer of the internal counter to the Count Register. The output stays high for N/2 [(N+1)/2 if N is odd] and then goes low for N/2 [(N−1)/2 if N is odd]. On the falling edge of the clock which signifies the final count for the output in low state, the output returns to high state and the Count Register is transferred to the internal counter. The whole process is then repeated. Baud Rates are shown in Table 6.

The baud rate generator is located at 0CH (12), relative to the 16-byte boundary in the I/O space in which the 80130 component is located ("OSF" in the following example), the timer control word is located at

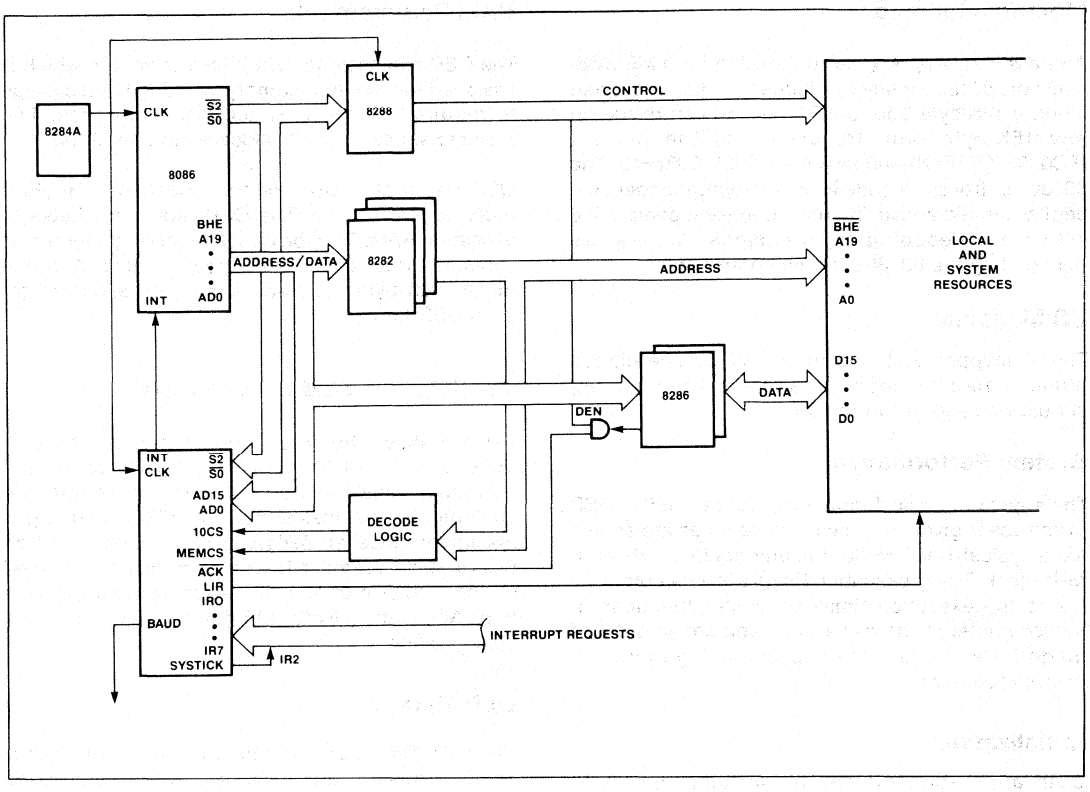

Figure 8. Typical OSP Configuration

relative address, 0EH(14). Timers are addressed with IOCS=0. Timers 0 and 1 are assigned to the use by the OSP, and should not be altered by the user.

For most baud-rate generator applications, the command byte

OB6H Read/Write Baud-Rate Delay Value

will be used. A typical sequence to set a baud rate of 9600 using a count value of 833 follows (see Table 6):

```
MOV  AX,086H      Prepare to Write Delay to
                  Timer 3.
OUT  OSF+14,AX    Control Word.
MOV  AX, 833
OUT  OSF+12,AL    LSB written first.
SCHG AL,AH
OUT  OSF+12,AL    MSB written after.
```

The 80130 timers are subset compatible with 8254 timers.

Interrupt Controller

The Programmable Interrupt Controller (PIC), is also an integral unit of the 80130. Its eight input pins handle eight vectored priority interrupts. One of these pins must be used for the SYSTICK time function in timing waits, using an external connection as shown. During the 80130 initialization and configuration sequence, each 80130 interrupt pin is individually programmed as either level or edge sensitive. External slave 8259A interrupt controllers can be used to expand the total number of OSP external interrupts to 57.

In addition to standard PIC funtions, 80130 PIC unit has an $\overline{LIR}$ output signal, which when low indicates an interrupt acknowledge cycle. $\overline{LIR}$=0 is provided to control the 8289 Bus Arbiter SYSB/$\overline{RESB}$ pin. This will avoid the need of requesting the system bus to acknowledge local bus non-slave interrupts. The user defines the interrupt system as part of the configuration.

INTERRUPT SEQUENCE

The OSP interrupt sequence is as follows:

1. One or more of the interrupts is set by a low-to-high transition on edge-sensitive IR inputs or by a high input on level-sensitive IR inputs.
2. The 80130 evaluates these requests, and sends an INT to the CPU, if appropriate.
3. The CPU acknowledges the INT and responds with an interrupt acknowledge cycle which is encoded in $\overline{S_2}$-$\overline{S_0}$.
4. Upon receiving the first interrupt acknowledge from the CPU, the highest-priority interrupt is set by the 80130 and the corresponding edge detect latch is reset. The 80130 does not drive the address/data bus during this bus cycle but does acknowledge the cycle by making $\overline{ACK}$=0 and sending the $\overline{LIR}$ value for the IR input being acknowledged.
5. The CPU will then initiate a second interrupt acknowledge cycle. During this cycle, the 80130 will supply the cascade address of the interrupting input at T_1 on the bus and also release an 8-bit pointer onto the bus if appropriate, where it is read by the CPU. If the 80130 does supply the pointer, then $\overline{ACK}$ will be low for the cycle. This cycle also has the value $\overline{LIR}$ for the IR input being acknowledged.
6. This completes the interrupt cycle. The ISR bit remains set until an appropriate EXIT INTERRUPT primitive (EOI command) is called at the end of the Interrupt Handler.

OSP APPLICATION EXAMPLE

Figure 5 shows an application of the OSP primitives to keep track of time of day in a simplified example. The system design uses a 60 Hz A.C. signal as a time base. The power supply provides a TTL-compatible signal which drives one of 80130 edge-triggered interrupt request pins once each A.C. cycle. The Interrupt Handler responds to the interrupts, keeping track of one second's A.C. cycles. The Interrupt Task counts the seconds and after a day deletes itself. In typical systems it might perform a data logging operation once each day. The Interrupt Handler and Interrupt Task are written as separate modular programs.

The Interrupt Handler will actually service interrupt 59 when it occurs. It simply counts each interrupt, and at a count of 60 performs a SIGNAL INTERRUPT to notify the Interrupt Task that a second has elapsed. The Interrupt Handler (ACS HANDLER) was assigned to this level by the SET INTERRUPT primitive. After doing this, the Interrupt Task performed the Primitive RESUME TASK to resume the application task (INITS TASKS TOKEN).

The main body of the task is the counting loop. The Interrupt Task is signaled by the SIGNAL INTERRUPT primitive in the Interrupt Handler (at interrupt level ACS INTERRUPTS LEVEL). When the task is signalled by the Interrupt Handler it will execute the loop exactly one time, increasing the time count variables. Then it will execute the WAIT INTERRUPT primitive, and wait until awakened by the Interrupt Handler. Normally, the task will now wait some period of time for the next signal. However, since the interface between the Handler and the Task is asynchronous, the handler may have already queued the interrupt for servicing, the writer of the task does not have to worry about this possibility.

At the end of the day, the task will exit the loop and execute RESET INTERRUPT, which disables the interrupt level, and deletes the interrupt task. The OSP now reclaims the memory used by the Task and schedules another task. If an exception occurs, the coded value for the exception is available in TIMES EXCEPTS CODE after the execution of the primitive.

A typical PL/M-86 calling sequence is illustrated by the call to RESET INTERRUPT shown in Figure 5.

Table 2. OSP System Data Type Summary

Job	Jobs are the means of organizing the program environment and resources. An application consists of one or more jobs. Each iAPX 86/30 system data type is contained in some job. Jobs are independent of each other, but they may share access to resources. Each job has one or more tasks, one of which is an initial task. Jobs are given pools of memory, and they may create subordinate offspring jobs, which may borrow memory from their parents.
Task	Tasks are the means by which computations are accomplished. A task is an instruction stream with its own execution stack and private data. Each task is part of a job and is restricted to the resources provided by its job. Tasks may perform general interrupt handling as well as other computational functions. Each task has a set of attributes, which is maintained for it by the iAPX 86/30, which characterize its status. These attributes are: its containing job its register context its priority (0–255) its execution state (asleep, suspended, ready, running, asleep/suspended). its suspension depth its user-selected exception handler its optional 8087 extended task state
Segment	Segments are the units of memory allocation. A segment is a physically contiguous sequence of 16-byte, 8086 paragraph-length, units. Segments are created dynamically from the free memory space of a Job as one of its Tasks requests memory for its use. A segment is deleted when it is no longer needed. The iAPX 86/30 maintains and manages free memory in an orderly fashion, it obtains memory space from the pool assigned to the containing job of the requesting task and returns the space to the job memory pool (or the parent job pool) when it is no longer needed. It does not allocate memory to create a segment if sufficient free memory is not available to it, in that case it returns an error exception code.
Mailbox	Mailboxes are the means of intertask communication. Mailboxes are used by tasks to send and receive message segments. The iAPX 86/30 creates and manages two queues for each mailbox. One of these queues contains message segments sent to the mailbox but not yet received by any task. The other mailbox queue consists of tasks that are waiting to receive messages. The iAPX 86/30 operation assures that waiting tasks receive messages as soon as messages are available. Thus at any moment one or possibly both of two mailbox queues will be empty.
Region	Regions are the means of serialization and mutual exclusion. Regions are familiar as "critical code regions." The iAPX 86/30 region data type consists of a queue of tasks. Each task waits to execute in mutually exclusive code or to access a shared data region, for example to update a file record.
Tokens	The OSP interface makes use of a 16-bit TOKEN data type to identify individual OSF data structures. Each of these (each instance) has its own unique TOKEN. When a primitive is called, it is passed the TOKENs of the data structures on which it will operate.

Table 3. System Data Type Codes and Attributes

S.D.T.	Code	Attributes
Jobs	1	Tasks Memory Pool S.D.T. Directory
Tasks	2	Priority Stack Code State Exception Handler
Mailboxes	3	Queue of S.D.T.s (generally segments) Queue of Tasks waiting for S.D.T.s
Region	5	Queue of Tasks waiting for mutually exclusive code or data
Segments	6	Buffer Length

Table 4. OSP Primitives

Class	OSP Primitive	Interrupt Number	Entry Code in AX	Parameters On Caller's Stack
JOB	CREATE JOB	184	0100H	*See 80130 User Manual
TASK	CREATE TASK	184	0200H	Priority, IP Ptr, Data Segment, Stack Seg, Stack Size Task Information, ExcptPtr
	DELETE TASK	184	0201H	TASK, ExcptPtr
	SUSPEND TASK	184	0202H	TASK, ExcptPtr
	RESUME TASK	184	0203H	TASK, ExcptPtr
	SET PRIORITY	184	0209H	TASK, Priority, ExcptPtr
	SLEEP	184	0204H	Time Limit,ExcptPtr
INTERRUPT	DISABLE	190	0705H	Level, ExcptPtr
	ENABLE	184	0704H	Level #, ExcptPtr
	ENTER INTERRUPT	184	0703H	Level #, ExcptPtr
	EXIT INTERRUPT	186	NONE	Level #,ExcptPtr
	GET LEVEL	188	0702H	Level #, ExcptPtr
	RESET INTERRUPT	184	0706H	Level #, ExcptPtr
	SET INTERRUPT	184	0701H	Level, Interrupt Task Flag Interrupt Handler Ptr, Interrupt Handler DataSeg ExcptPtr
	SIGNAL INTERRUPT	185	NONE	Level, ExcptPtr
	WAIT INTERRUPT	187	NONE	Level, ExcptPtr
SEGMENT	CREATE SEGMENT	184	0600H	Size, ExcptPtr
	DELETE SEGMENT	184	0603H	SEGMENT, ExceptPtr

Table 4. OSP Primitives (Continued)

Class	OSP Primitive	Interrupt Number	Entry Code in AX	Parameters On Caller's Stack
MAILBOX	CREATE MAILBOX	184	0300H	Mailbox flags, ExcptPtr
	DELETE MAILBOX	184	0301H	MAILBOX, ExcptPtr
	RECEIVE MESSAGE	184	0303H	MAILBOX, Time Limit ResponsePtr, ExcptPtr
	SEND MESSAGE	184	0302H	MAILBOX,Message Response, ExcptPtr
REGION	ACCEPT CONTROL	184	0504H	REGION, ExcptPtr
	CREATE REGION	184	0500H	Region Flags, ExcptPtr
	DELETE REGION	184	0501H	REGION, ExcptPtr
	RECEIVE CONTROL	184	0503H	REGION, ExcptPtr
	SEND CONTROL	184	0502H	ExcptPtr
ENVIRONMENTAL	DISABLE DELETION	184	0001H	TOKEN,ExcptPtr
	ENABLE DELETION	184	0002H	TOKEN,ExcptPtr
	GET EXCEPTION HANDLER	184	0800H	Ptr,ExcptPtr
	GET TYPE	184	0000H	TOKEN,ExcptPtr
	GET TASK TOKENS	184	0206H	Request, ExcptPtr
	SET EXCEPTION HANDLER	184	0801H	Ptr, ExcptPtr
	SET OS EXTENSION	184	0700H	Code,InstPtr, ExcptPtr
	SIGNAL EXCEPTION	184	0802H	Exception Code, Parameter Number, StackPtr,0,0,ExcptPtr

NOTES:
All parameters are pushed onto the OSP stack. Each parameter is one word. See Figure 3 for Call Sequence.

Explanation of the Symbols

JOB	OSP JOB SDT Token
TASK	OSP TASK SDT Token
REGION	OSP REGION SDT Token
MAILBOX	OSP MAILBOX SDT Token
SEGMENT	OSP SEGMENT SDT Token
TOKEN	Any SDT Token
Level	Interrupt Level Number
ExcptPtr	Pointer to Exception Code
Message	Message Token
Ptr	Pointer to Code,Stack etc. Address
Seg	Value Loaded into appropriate Segment Register
----	Value Parameter.

Table 5. OSP Primitive Performance Examples

Datatype Class	Primitive Execution Speed* (microseconds)	
JOB	CREATE JOB	2950
TASK	CREATE TASK (no preemption)	1360
SEGMENT	CREATE SEGMENT	700
MAILBOX	SEND MESSAGE (with task switch)	475
	SEND MESSAGE (no task switch)	265
	RECEIVE MESSAGE (task waiting)	540
	RECEIVE MESSAGE (message waiting)	260
REGION	SEND CONTROL	170
	RECEIVE CONTROL	205

*8 MHz iAPX 86/30 OSP Configuation.

Table 6. Baud Rate Values

Baud Rate	8 MHz	5 MHz
300	26667	16667
600	13333	8333
1200	6667	4166
2400	3333	2083
4800	1667	1042
9600	833	521

Table 7a. Mnemonic Codes for Unavoidable Exceptions

E$OK	Exception Code Value = 0 the operation was successful
E$TIME	Exception Code Value = 1 the specified time limit expired before completion of the operations was possible
E$MEM	Exception Code Value = 2 insufficient nucleus memory is available to satisfy the request
E$BUSY	Exception Code Value = 3 specified region is currently busy
E$LIMIT	Exception Code Value = 4 attempted violation of a job, semaphore, or system limit
E$CONTEXT	Exception Code Value = 5 the primitive was called in an illegal context (e.g., call to enable for an already enabled interrupt)
E$EXIST	Exception Code Value = 6 a token argument does not currently refer to any object; note that the object could have been deleted at any time by its owner
E$STATE	Exception Code Value = 7 attempted illegal state transition by a task
ENOTCONFIGURED	Exception Code Value = 8 the primitive called is not configured in this system
E$INTERRUPT$SATURATION	Exception Code Value = 9 The interrupt task on the requested level has reached its user specified saturation point for interrupt service requests. No further interrupts will be allowed on the level until the interrupt task executes a WAIT$INTERRUPT. (This error is only returned, in line, to interrupt handlers.)
E$INTERRUPT$OVERFLOW	Exception Code Value = 10 The interrupt task on the requested level previously reached its saturation point and caused an E$INTERRUPT$SATURATION condition. It subsequently executed an ENABLE allowing further interrupts to come in and has received another SIGNAL$INTERRUPTcall, bringing it over its specified saturation point for interrupt service requests. (This error is only returned, in line, to interrupt handlers).

Table 7b. Mnemonic Codes for Avoidable Exceptions

E$ZERO$DIVIDE	Exception Code Value = 8000H divide by zero interrupt occurred
E$OVERFLOW	Exception Code Value = 8001H overflow interrupt occurred
E$TYPE	Exception Code Value = 8002H a token argument referred to an object tha was not of required type
E$BOUNDS	Exception Code Value = 8003H an offset argument is out of segment bounds
E$PARAM	Exception Code Value = 8004H a (non-token,non-offset) argument has an illegal value
EBADCALL	Exception Code Value = 8005H an entry code for which there is no corresponding primitive was passed
E$ARRAY$BOUNDS = 8006H	Hardware or Language has detected an array overflow
ENDPERROR	Exception Code Value = 8007H an 8087 (Numeric data Processor) error has been detected; (the 8087 status information is contained in a parameter to the exception handler)

ABSOLUTE MAXIMUM RATINGS*

Ambient Temperature Under Bins ..... 0°C to 70°C
Storage Temperature ..... −65°C to 150°C
Voltage on Any Pin With
Respect to Ground ..... 1.0V to +7V
Power Dissipation ..... 1.0 Watts

**NOTICE: Stresses above those listed under Absolute Maximum Ratings may cause permanent damage to the device. This is a stress rating only and functional operation of the device at these or any other conditions above those indicated in the operational sections of this specification is not implied. Exposure to absolute maximum rating conditions for extended period may affect device reliability.*

D.C. CHARACTERISTICS (T_A = 0°C to 70°C, V_{CC} = 4.5 to 5.5V)

Symbol	Parameter	Min.	Max.	Units	Test Conditions
V_{IL}	Input Low Voltage	−0.5	0.8	V	
V_{IH}	Input High Voltage	2.0	V_{CC} + .5	V	
V_{OL}	Output Low Voltage		0.45	V	I_{OL} = 2 mA
V_{OH}	Output High Voltage	2.4		V	I_{OH} = −400 μA
I_{CC}	Power Supply Current		300	mA	T_A = 25 C
I_{LI}	Input Leakage Current		10	μA	0 = V_{IN} = V_{CC}
I_{LR}	IR Input Load Current		10 −300	μA μA	V_{IN} = V_{CC} V_{IN} = 0
I_{LO}	Output Leakage Current		10	μA	.45 = V_{IN} = V_{CC}
V_{CLI}	Clock Input Low		0.6	V	
V_{CHI}	Clock Input High	3.9		V	
C_{IN}	Input Capacitance		10	pF	
C_{IO}	I/O Capacitance		15	pF	

A.C. CHARACTERISTICS (T_A = 0–70°C, V_{CC} = 4.5–5.5 Volt, V_{SS} = Ground)

Symbol	Parameter	Min.	Max.	Units	Notes
T_{CLCL}	CLK Cycle Period	125	—	ns	C_L = 20–200 pF
T_{CLCH}	CLK Low Time	57	—	ns	
T_{CHCL}	CLK High Time	44	2000	ns	
T_{SVCH}	Status Active Setup Time	65	—	ns	
T_{CHSV}	Status Active Hold Time	10	—	ns	
T_{SHCL}	Status Inactive Setup Time	55	—	ns	
T_{CLSH}	Status Inactive Hold Time	10	—	ns	
T_{ASCH}	Address Valid Setup Time	8	—	ns	
T_{CLAH}	Address Hold Time	10	—	ns	
T_{CSCL}	Chip Select Setup Time	20	—	ns	
T_{CHCS}	Chip Select Hold Time	0	—	ns	
T_{DSCL}	Write Data Setup Time	60	—	ns	
T_{CHDH}	Write Data Hold Time	10	—	ns	
T_{JLJH}	IR Low Time	100	—	ns	
T_{ACC}	Read Data from Address	$3T_{CLCL}-T_{DVCL}-T_{CLCH}-20$		ns	
T_{CLDV}	Read Data Valid Delay	—	100	ns	
T_{CLDH}	Read Data Hold Time	10	—	ns	
T_{CLDX}	Read Data to Floating	10	—	ns	
T_{CLCA}	Cascade Address Delay Time	—	50	ns	
T_{IACA}	INTA Status to Cascade	—	50	ns	

A.C. CHARACTERISTICS (Continued)

Symbol	Parameter	Min.	Max.	Units	Notes
T_{CLCF}	Cascade Address Hold Time	10	—	ns	
T_{CLVE}	Acknowledge Delay Time	—	100	ns	
T_{IAVE}	INTA Status to Acknowledge	—	80	ns	
T_{CHEH}	Acknowledge Hold Time	10	—	ns	
T_{CSAK}	Chip Select to ACK	—	110	ns	
T_{SACK}	Status to ACK	—	140	ns	
T_{CHAK}	Clock to ACK	—	140	ns	
T_{CLOD}	Timer Output Delay Time	—	200	ns	C_L = 100 pF
T_{CLOD1}	Timer1 Output Delay Time	—	$200+T_{CLCL}$	ns	C_L = 100 pF
T_{JHIH}	INT Output Delay	—	T_{CLCL} + 100	ns	

WAVEFORMS

A.C.

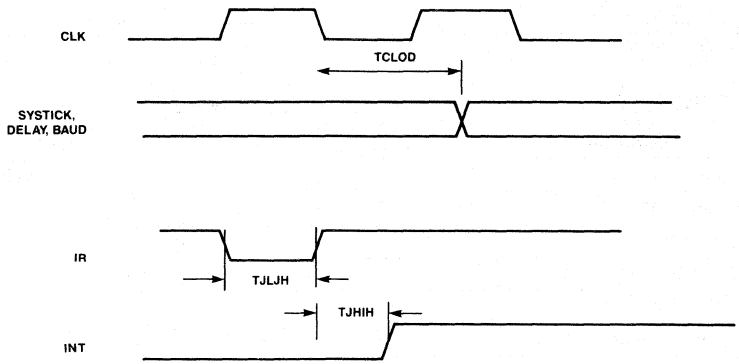

WAVEFORMS

D.C.

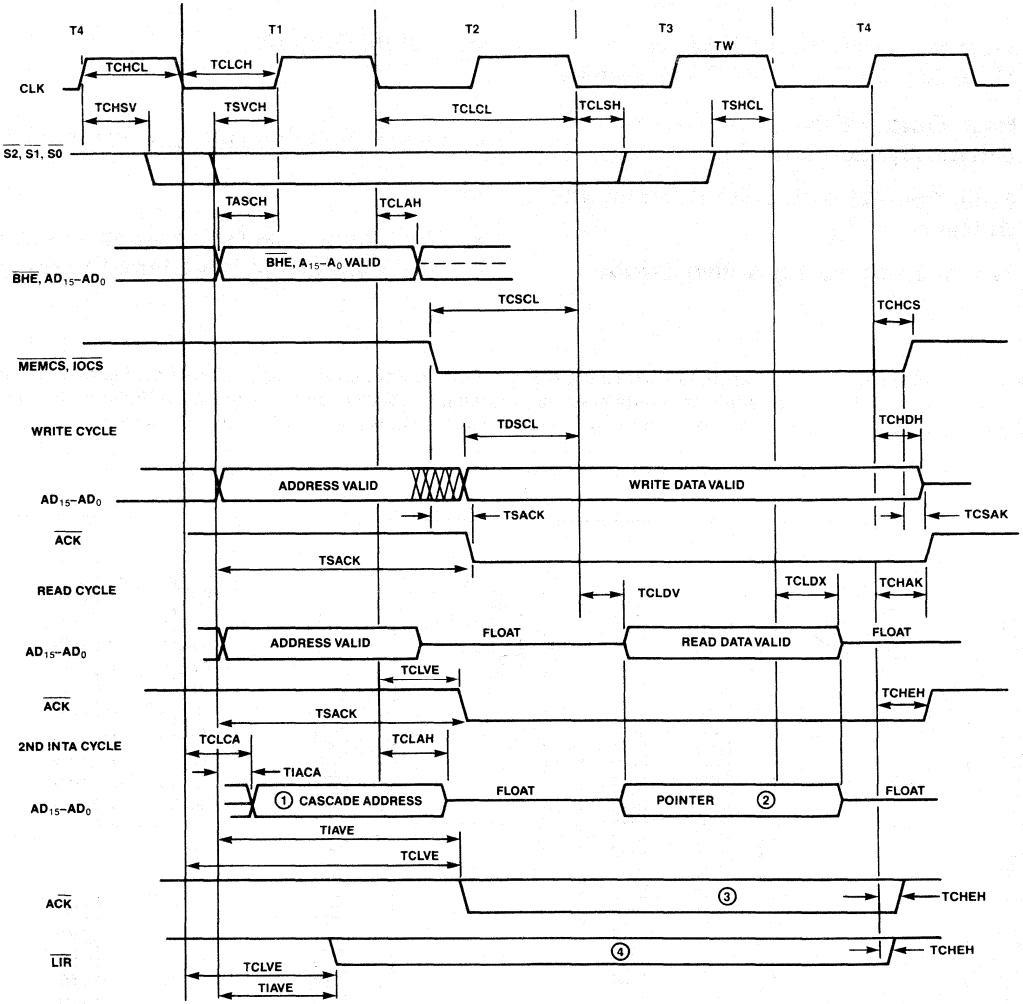

NOTES:
1. CASCADE ADDRESS PRESENTED ON AD8, AD9 AND AD10 CORRESPONDING TO CAS0, CAS1 and CAS2 RESPECTIVELY. ALL OTHER AD1 LINES ARE ACTIVE AND HAVE UNKNOWN VALUES.
2. POINTER VALUE IS ACTIVE ONLY IF POINTER IS GENERATED FROM THE 80130 AND NOT FROM EXTERNAL SLAVE UNIT.
3. ACTIVE LOW ONLY WHEN POINTER DATA IS BEING SUPPLIED BY THE 80130.
4. LOW ONLY FOR LOCAL INTERRUPT.

8282/8283
OCTAL LATCH

- **Address Latch for iAPX 86, 88, MCS-80®, MCS-85®, MCS-48® Families**
- **High Output Drive Capability for Driving System Data Bus**
- **Fully Parallel 8-Bit Data Register and Buffer**
- **Transparent during Active Strobe**
- **3-State Outputs**
- **20-Pin Package with 0.3" Center**
- **No Output Low Noise when Entering or Leaving High Impedance State**

The 8282 and 8283 are 8-bit bipolar latches with 3-state output buffers. They can be used to implement latches, buffers, or multiplexers. The 8283 inverts the input data at its outputs while the 8282 does not. Thus, all of the principal peripheral and input/output functions of a microcomputer system can be implemented with these devices.

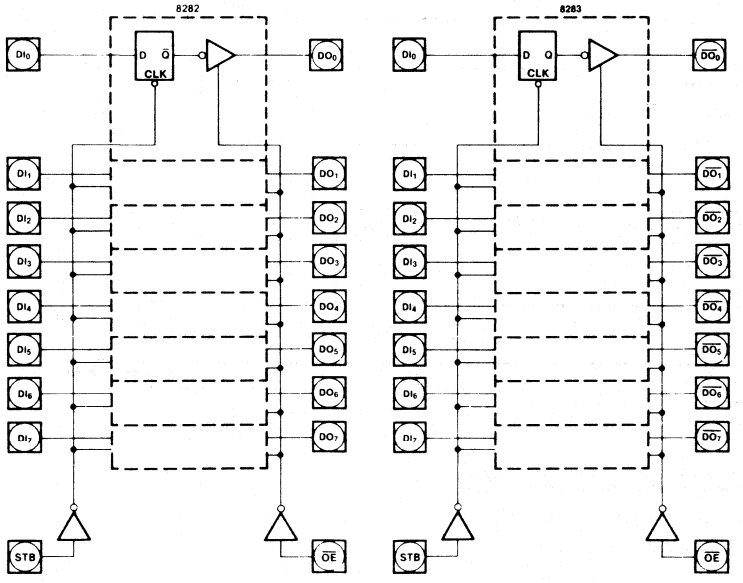

Figure 1. Logic Diagrams

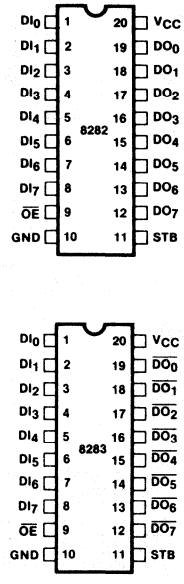

Figure 2. Pin Configurations

Table 1. Pin Description

Pin	Description
STB	STROBE (Input). STB is an input control pulse used to strobe data at the data input pins (A_0-A_7) into the data latches. This signal is active HIGH to admit input data. The data is latched at the HIGH to LOW transition of STB.
$\overline{OE}$	OUTPUT ENABLE (Input). $\overline{OE}$ is an input control signal which when active LOW enables the contents of the data latches onto the data output pin (B_0-B_7). OE being inactive HIGH forces the output buffers to their high impedance state.
DI_0-DI_7	DATA INPUT PINS (Input). Data presented at these pins satisfying setup time requirements when STB is strobed and latched into the data input latches.
DO_0-DO_7 (8282) $\overline{DO}_0$-$\overline{DO}_7$ (8283)	DATA OUTPUT PINS (Output). When $\overline{OE}$ is true, the data in the data latches is presented as inverted (8283) or non-inverted (8282) data onto the data output pins.

FUNCTIONAL DESCRIPTION

The 8282 and 8283 octal latches are 8-bit latches with 3-state output buffers. Data having satisfied the setup time requirements is latched into the data latches by strobing the STB line HIGH to LOW. Holding the STB line in its active HIGH state makes the latches appear transparent. Data is presented to the data output pins by activating the $\overline{OE}$ input line. When $\overline{OE}$ is inactive HIGH the output buffers are in their high impedance state. Enabling or disabling the output buffers will not cause negative-going transients to appear on the data output bus.

ABSOLUTE MAXIMUM RATINGS*

Temperature Under Bias . . . . . 0°C to 70°C
Storage Temperature . . . . . −65°C to +150°C
All Output and Supply Voltages . . . . . −0.5V to +7V
All Input Voltages . . . . . −1.0V to +5.5V
Power Dissipation . . . . . 1 Watt

**NOTICE: Stresses above those listed under "Absolute Maximum Ratings" may cause permanent damage to the device. This is a stress rating only and functional operation of the device at these or any other conditions above those indicated in the operational sections of this specification is not implied. Exposure to absolute maximum rating conditions for extended periods may affect device reliability.*

D.C. CHARACTERISTICS (V_{CC} = 5V ±10%, T_A = 0°C to 70°C)

Symbol	Parameter	Min.	Max.	Units	Test Conditions
V_C	Input Clamp Voltage		−1	V	I_C = −5 mA
I_{CC}	Power Supply Current		160	mA	
I_F	Forward Input Current		−0.2	mA	V_F = 0.45V
I_R	Reverse Input Current		50	μA	V_R = 5.25V
V_{OL}	Output Low Voltage		.45	V	I_{OL} = 32 mA
V_{OH}	Output High Voltage	2.4		V	I_{OH} = −5 mA
I_{OFF}	Output Off Current		± 50	μA	V_{OFF} = 0.45 to 5.25V
V_{IL}	Input Low Voltage		0.8	V	V_{CC} = 5.0V See Note 1
V_{IH}	Input High Voltage	2.0		V	V_{CC} = 5.0V See Note 1
C_{IN}	Input Capacitance		12	pF	F = 1 MHz V_{BIAS} = 2.5V, V_{CC} = 5V T_A = 25°C

NOTE:
1. Output Loading I_{OL} = 32 mA, I_{OH} = −5 mA, C_L = 300 pF.*

A.C. CHARACTERISTICS (V_{CC} = 5V ±10%, T_A = 0°C to 70°C
Loading: Outputs—I_{OL} = 32 mA, I_{OH} = −5 mA, C_L = 300 pF*)

Symbol	Parameter	Min.	Max.	Units	Test Conditions
TIVOV	Input to Output Delay				(See Note 1)
	—Inverting	5	22	ns	
	—Non-Inverting	5	30	ns	
TSHOV	STB to Output Delay				
	—Inverting	10	40	ns	
	—Non-Inverting	10	45	ns	
TEHOZ	Output Disable Time	5	18	ns	
TELOV	Output Enable Time	10	30	ns	
TIVSL	Input to STB Setup Time	0		ns	
TSLIX	Input to STB Hold Time	25		ns	
TSHSL	STB High Time	15		ns	
TILIH, TOLOH	Input, Output Rise Time		20	ns	From 0.8V to 2.0V
TIHIL, TOHOL	Input, Output Fall Time		12	ns	From 2.0V to 0.8V

NOTE:
1. See waveforms and test load circuit on following page.

*C_L = 200 pF for plastic 8282/8283.

A.C. TESTING INPUT, OUTPUT WAVEFORM

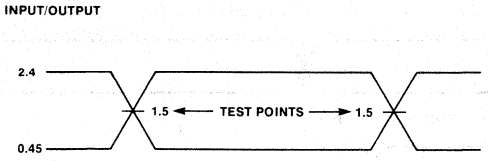

A.C. TESTING: INPUTS ARE DRIVEN AT 2.4V FOR A LOGIC "1" AND 0.45V FOR A LOGIC "0." TIMING MEASUREMENTS ARE MADE AT 1.5V FOR BOTH A LOGIC "1" AND "0."

OUTPUT TEST LOAD CIRCUITS

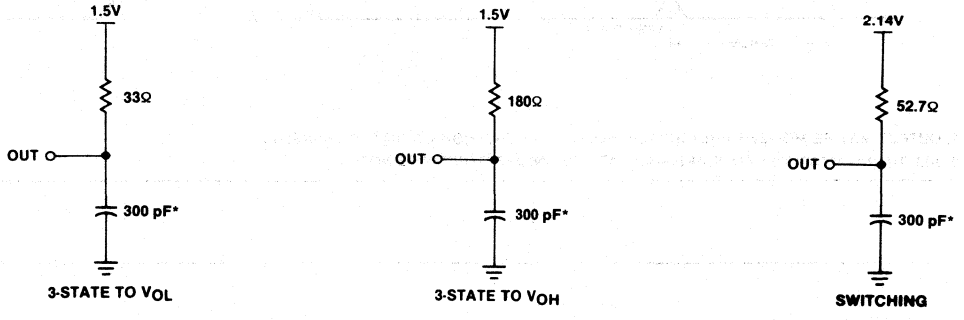

*200 pF for plastic 8282/8283.

WAVEFORMS

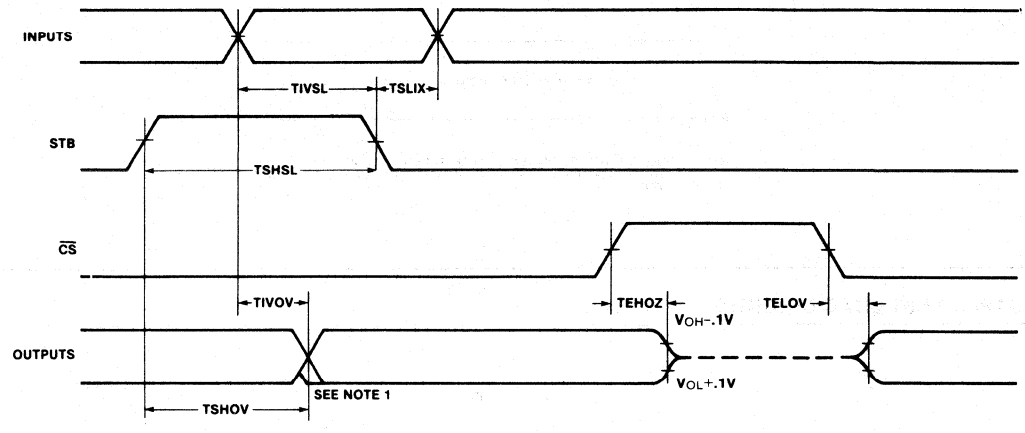

NOTE: 1. OUTPUT MAY BE MOMENTARILY INVALID FOLLOWING THE HIGH GOING STB TRANSITION.
2. ALL TIMING MEASUREMENTS ARE MADE AT 1.5V UNLESS OTHERWISE NOTED.

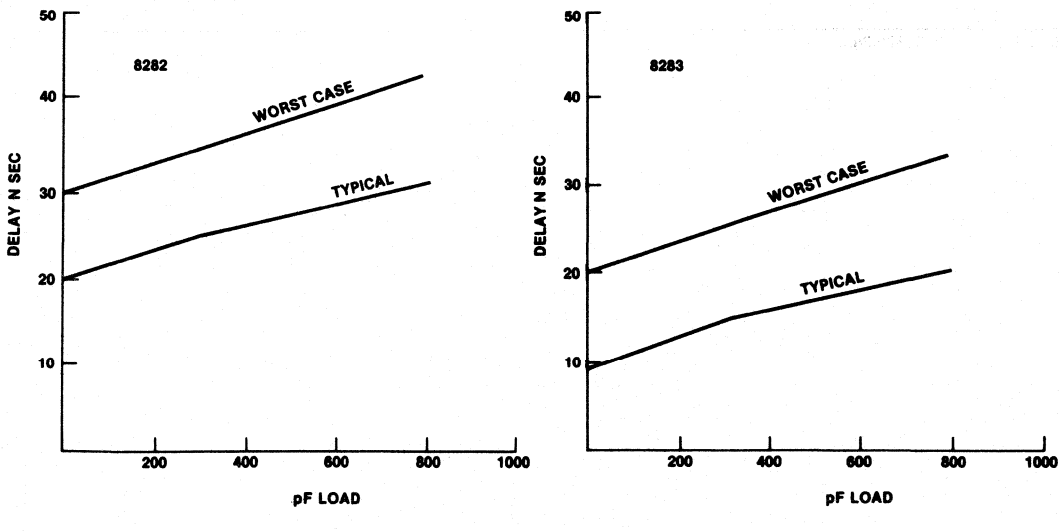

Output Delay vs. Capacitance

8284A/8284A-1
CLOCK GENERATOR AND DRIVER FOR iAPX 86, 88 PROCESSORS

- Generates the System Clock for the iAPX 86, 88 Processors: 5 MHz, 8 MHz with 8284A 10 MHz with 8284A-1
- Uses a Crystal or a TTL Signal for Frequency Source
- Provides Local READY and Multibus™ READY Synchronization
- 18-Pin Package
- Single +5V Power Supply
- Generates System Reset Output from Schmitt Trigger Input
- Capable of Clock Synchronization with Other 8284As

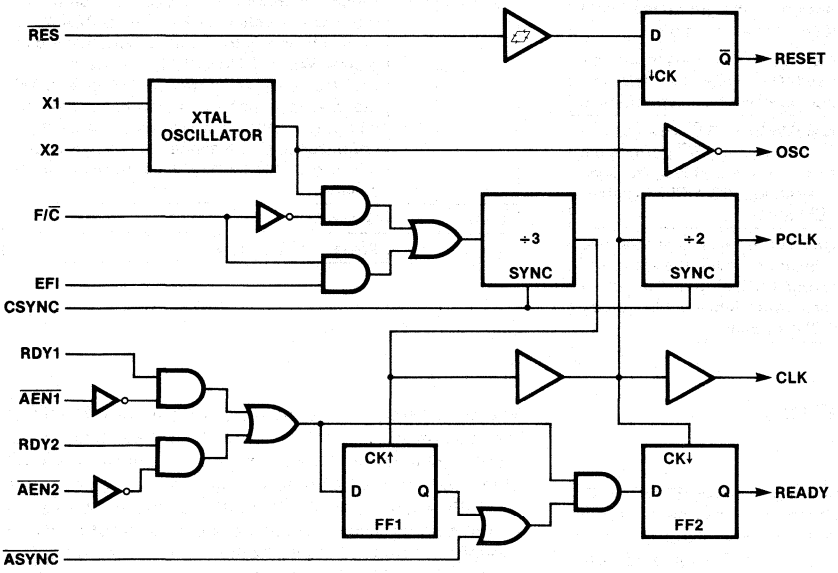

Figure 1. 8284A/8284A-1 Block Diagram

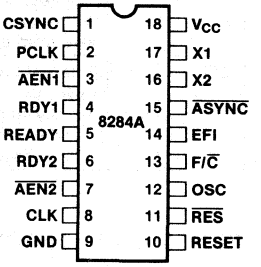

Figure 2. 8284A/8284A-1 Pin Configuration

Table 1. Pin Description

Symbol	Type	Name and Function
$\overline{AEN1}$, $\overline{AEN2}$	I	**Address Enable:** $\overline{AEN}$ is an active LOW signal. AEN serves to qualify its respective Bus Ready Signal (RDY1 or RDY2). $\overline{AEN1}$ validates RDY1 while $\overline{AEN2}$ validates RDY2. Two AEN signal inputs are useful in system configurations which permit the processor to access two Multi-Master System Busses. In non Multi-Master configurations the $\overline{AEN}$ signal inputs are tied true (LOW).
RDY1, RDY2	I	**Bus Ready:** (Transfer Complete). RDY is an active HIGH signal which is an indication from a device located on the system data bus that data has been received, or is available. RDY1 is qualified by $\overline{AEN1}$ while RDY2 is qualified by $\overline{AEN2}$.
$\overline{ASYNC}$	I	**Ready Synchronization Select:** $\overline{ASYNC}$ is an input which defines the synchronization mode of the READY logic. When $\overline{ASYNC}$ is low, two stages of READY synchronization are provided. When $\overline{ASYNC}$ is left open (internal pull-up resistor is provided) or HIGH a single stage of READY synchronization is provided.
READY	O	**Ready:** READY is an active HIGH signal which is the synchronized RDY signal input. READY is cleared after the guaranteed hold time to the processor has been met.
X1, X2	I	**Crystal In:** X1 and X2 are the pins to which a crystal is attached. The crystal frequency is 3 times the desired processor clock frequency.
F/$\overline{C}$	I	**Frequency/Crystal Select:** F/$\overline{C}$ is a strapping option. When strapped LOW, F/$\overline{C}$ permits the processor's clock to be generated by the crystal. When F/$\overline{C}$ is strapped HIGH, CLK is generated from the EFI input.
EFI	I	**External Frequency:** When F/$\overline{C}$ is strapped HIGH, CLK is generated from the input frequency appearing on this pin. The input signal is a square wave 3 times the frequency of the desired CLK output.

Symbol	Type	Name and Function
CLK	O	**Processor Clock:** CLK is the clock output used by the processor and all devices which directly connect to the processor's local bus (i.e., the bipolar support chips and other MOS devices). CLK has an output frequency which is ⅓ of the crystal or EFI input frequency and a ⅓ duty cycle. An output HIGH of 4.5 volts (V_{CC}= 5V) is provided on this pin to drive MOS devices.
PCLK	O	**Peripheral Clock:** PCLK is a TTL level peripheral clock signal whose output frequency is ½ that of CLK and has a 50% duty cycle.
OSC	O	**Oscillator Output:** OSC is the TTL level output of the internal oscillator circuitry. Its frequency is equal to that of the crystal.
$\overline{RES}$	I	**Reset In:** $\overline{RES}$ is an active LOW signal which is used to generate RESET. The 8284A provides a Schmitt trigger input so that an RC connection can be used to establish the power-up reset of proper duration.
RESET	O	**Reset:** RESET is an active HIGH signal which is used to reset the 8086 family processors. Its timing characteristics are determined by $\overline{RES}$.
CSYNC	I	**Clock Synchronization:** CSYNC is an active HIGH signal which allows multiple 8284As to be synchronized to provide clocks that are in phase. When CSYNC is HIGH the internal counters are reset. When CSYNC goes LOW the internal counters are allowed to resume counting. CSYNC needs to be externally synchronized to EFI. When using the internal oscillator CSYNC should be hardwired to ground.
GND		**Ground.**
V_{CC}		**Power:** +5V supply.

FUNCTIONAL DESCRIPTION

General

The 8284A is a single chip clock generator/driver for the iAPX 86, 88 processors. The chip contains a crystal-controlled oscillator, a divide-by-three counter, complete MULTIBUS™ "Ready" synchronization and reset logic. Refer to Figure 1 for Block Diagram and Figure 2 for Pin Configuration.

Oscillator

The oscillator circuit of the 8284A is designed primarily for use with an external series resonant, fundamental mode, crystal from which the basic operating frequency is derived.

The crystal frequency should be selected at three times the required CPU clock. X1 and X2 are the two crystal input crystal connections. For the most stable operation of the oscillator (OSC) output circuit, two series resistors (R_1 = R_2 = 510 Ω) as shown in the waveform figures are recommended. The output of the oscillator is buffered and brought out on OSC so that other system timing signals can be derived from this stable, crystal-controlled source.

For systems which have a V_{CC} ramp time ≥ 1V/ms and/or have inherent board capacitance between X1 or X2, exceeding 10 pF (not including 8284A pin capacitance), the two 510Ω resistors should be used. This circuit provides optimum stability for the oscillator in such extreme conditions. It is advisable to limit stray capacitances to less than 10 pF on X1 and X2 to minimize deviation from operating at the fundamental frequency.

Clock Generator

The clock generator consists of a synchronous divide-by-three counter with a special clear input that inhibits the counting. This clear input (CSYNC) allows the output clock to be synchronized with an external event (such as another 8284A clock). It is necessary to synchronize the CSYNC input to the EFI clock external to the 8284A. This is accomplished with two Schottky flip-flops. The counter output is a 33% duty cycle clock at one-third the input frequency.

The F/$\overline{C}$ input is a strapping pin that selects either the crystal oscillator or the EFI input as the clock for the ÷3 counter. If the EFI input is selected as the clock source, the oscillator section can be used independently for another clock source. Output is taken from OSC.

Clock Outputs

The CLK output is a 33% duty cycle MOS clock driver designed to drive the iAPX 86, 88 processors directly. PCLK is a TTL level peripheral clock signal whose output frequency is ½ that of CLK. PCLK has a 50% duty cycle.

Reset Logic

The reset logic provides a Schmitt trigger input ($\overline{RES}$) and a synchronizing flip-flop to generate the reset timing. The reset signal is synchronized to the falling edge of CLK. A simple RC network can be used to provide power-on reset by utilizing this function of the 8284A.

READY Synchronization

Two READY inputs (RDY1, RDY2) are provided to accommodate two Multi-Master system busses. Each input has a qualifier ($\overline{AEN1}$ and $\overline{AEN2}$, respectively). The $\overline{AEN}$ signals validate their respective RDY signals. If a Multi-Master system is not being used the $\overline{AEN}$ pin should be tied LOW.

Synchronization is required for all asynchronous active-going edges of either RDY input to guarantee that the RDY setup and hold times are met. Inactive-going edges of RDY in normally ready systems do not require synchronization but must satisfy RDY setup and hold as a matter of proper system design.

The $\overline{ASYNC}$ input defines two modes of READY synchronization operation.

When $\overline{ASYNC}$ is LOW, two stages of synchronization are provided for active READY input signals. Positive-going asynchronous READY inputs will first be synchronized to flip-flop one at the rising edge of CLK and then synchronized to flip-flop two at the next falling edge of CLK, after which time the READY output will go active (HIGH). Negative-going asynchronous READY inputs will be synchronized directly to flip-flop two at the falling edge of CLK, after which time the READY output will go inactive. This mode of operation is intended for use by asynchronous (normally not ready) devices in the system which cannot be guaranteed by design to meet the required RDY setup timing, T_{R1VCL}, on each bus cycle.

When $\overline{ASYNC}$ is high or left open, the first READY flip-flop is bypassed in the READY synchronization logic. READY inputs are synchronized by flip-flop two on the falling edge of CLK before they are presented to the processor. This mode is available for synchronous devices that can be guaranteed to meet the required RDY setup time.

$\overline{ASYNC}$ can be changed on every bus cycle to select the appropriate mode of synchronization for each device in the system.

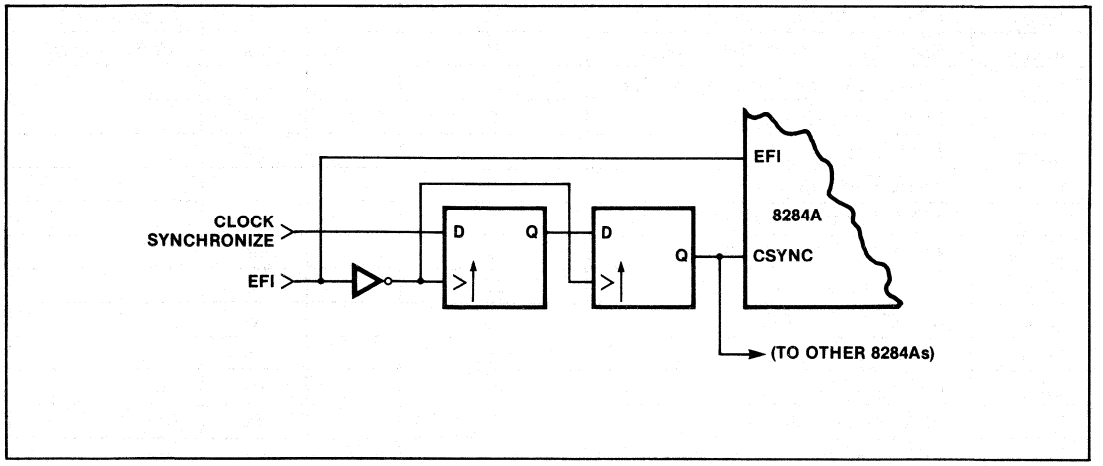

Figure 3. CSYNC Synchronization

ABSOLUTE MAXIMUM RATINGS*

Temperature Under Bias . . . . . 0°C to 70°C
Storage Temperature . . . . . −65°C to +150°C
All Output and Supply Voltages . . . . . −0.5V to +7V
All Input Voltages . . . . . −1.0V to +5.5V
Power Dissipation . . . . . 1 Watt

NOTICE: Stresses above those listed under "Absolute Maximum Ratings" may cause permanent damage to the device. This is a stress rating only and functional operation of the device at these or any other conditions above those indicated in the operational sections of this specification is not implied. Exposure to absolute maximum rating conditions for extended periods may affect device reliability.

D.C. CHARACTERISTICS (T_A = 0°C to 70°C, V_{CC} = 5V ± 10%)

Symbol	Parameter	Min.	Max.	Units	Test Conditions
I_F	Forward Input Current ($\overline{ASYNC}$) Other Inputs		−1.3 −0.5	mA mA	V_F = 0.45V V_F = 0.45V
I_R	Reverse Input Current ($\overline{ASYNC}$) Other Inputs		50 50	μA μA	$V_R = V_{CC}$ V_R = 5.25V
V_C	Input Forward Clamp Voltage		−1.0	V	I_C = −5mA
I_{CC}	Power Supply Current		162	mA	
V_{IL}	Input LOW Voltage		0.8	V	
V_{IH}	Input HIGH Voltage	2.0		V	
V_{IHR}	Reset Input HIGH Voltage	2.6		V	
V_{OL}	Output LOW Voltage		0.45	V	5mA
V_{OH}	Output HIGH Voltage CLK Other Outputs	4 2.4		V V	−1mA −1mA
$V_{IHR} - V_{ILR}$	$\overline{RES}$ Input Hysteresis	0.25		V	

A.C. CHARACTERISTICS (T_A = 0°C to 70°C, V_{CC} = 5V ± 10%)

TIMING REQUIREMENTS

Symbol	Parameter	Min.	Max.	Units	Test Conditions
t_{EHEL}	External Frequency HIGH Time	13		ns	90%-90% V_{IN}
t_{ELEH}	External Frequency LOW Time	13		ns	10%-10% V_{IN}
t_{ELEL}	EFI Period	33		ns	(Note 1)
	XTAL Frequency	12	25	MHz	
t_{R1VCL}	RDY1, RDY2 Active Setup to CLK	35		ns	$\overline{ASYNC}$ = HIGH
t_{R1VCH}	RDY1, RDY2 Active Setup to CLK	35		ns	$\overline{ASYNC}$ = LOW
t_{R1VCL}	RDY1, RDY2 Inactive Setup to CLK	35		ns	
t_{CLR1X}	RDY1, RDY2 Hold to CLK	0		ns	
t_{AYVCL}	$\overline{ASYNC}$ Setup to CLK	50		ns	
t_{CLAYX}	$\overline{ASYNC}$ Hold to CLK	0		ns	
t_{A1VR1V}	$\overline{AEN1}$, $\overline{AEN2}$ Setup to RDY1, RDY2	15		ns	
t_{CLA1X}	$\overline{AEN1}$, $\overline{AEN2}$ Hold to CLK	0		ns	
t_{YHEH}	CSYNC Setup to EFI	20		ns	
t_{EHYL}	CSYNC Hold to EFI	10		ns	
t_{YHYL}	CSYNC Width	$2 \cdot t_{ELEL}$		ns	
t_{I1HCL}	$\overline{RES}$ Setup to CLK	65		ns	(Note 1)
t_{CLI1H}	$\overline{RES}$ Hold to CLK	20		ns	(Note 1)
t_{ILIH}	Input Rise Time		20	ns	From 0.8V to 2.0V
t_{IHIL}	Input Fall Time		12	ns	From 2.0V to 0.8V

A.C. CHARACTERISTICS (Continued)

TIMING RESPONSES

Symbol	Parameter	Min. 8284A	Min. 8284A-1	Max.	Units	Test Conditions
t_{CLCL}	CLK Cycle Period	125	100		ns	
t_{CHCL}	CLK HIGH Time	$(1/3\ t_{CLCL})+2$	39		ns	
t_{CLCH}	CLK LOW Time	$(2/3\ t_{CLCL})-15$	53		ns	
t_{CH1CH2} t_{CL2CL1}	CLK Rise or Fall Time			10	ns	1.0V to 3.5V
t_{PHPL}	PCLK HIGH Time	$t_{CLCL}-20$	$t_{CLCL}-20$		ns	
t_{PLPH}	PCLK LOW Time	$t_{CLCL}-20$	$t_{CLCL}-20$		ns	
t_{RYLCL}	Ready Inactive to CLK (See Note 3)	−8	−8		ns	
t_{RYHCH}	Ready Active to CLK (See Note 2)	$(2/3\ t_{CLCL})-15$	53		ns	
t_{CLIL}	CLK to Reset Delay			40	ns	
t_{CLPH}	CLK to PCLK HIGH DELAY			22	ns	
t_{CLPL}	CLK to PCLK LOW Delay			22	ns	
t_{OLCH}	OSC to CLK HIGH Delay	−5	−5	22	ns	
t_{OLCL}	OSC to CLK LOW Delay	2	2	35	ns	
t_{OLOH}	Output Rise Time (except CLK)			20	ns	From 0.8V to 2.0V
t_{OHOL}	Output Fall Time (except CLK)			12	ns	From 2.0V to 0.8V

NOTES:

1. Setup and hold necessary only to guarantee recognition at next clock.
2. Applies only to T3 and TW states.
3. Applies only to T2 states.

A.C. TESTING INPUT, OUTPUT WAVEFORM

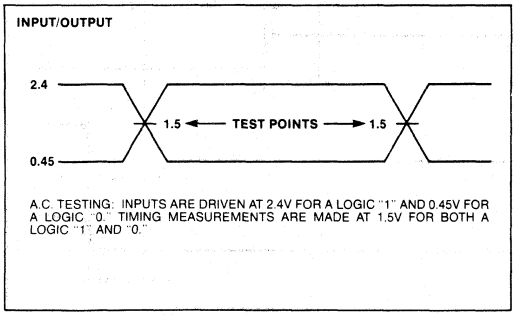

A.C. TESTING LOAD CIRCUIT

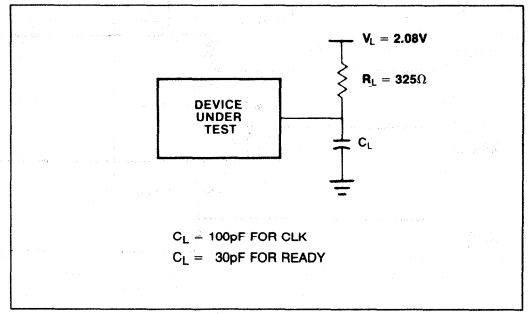

WAVEFORMS

CLOCKS AND RESET SIGNALS

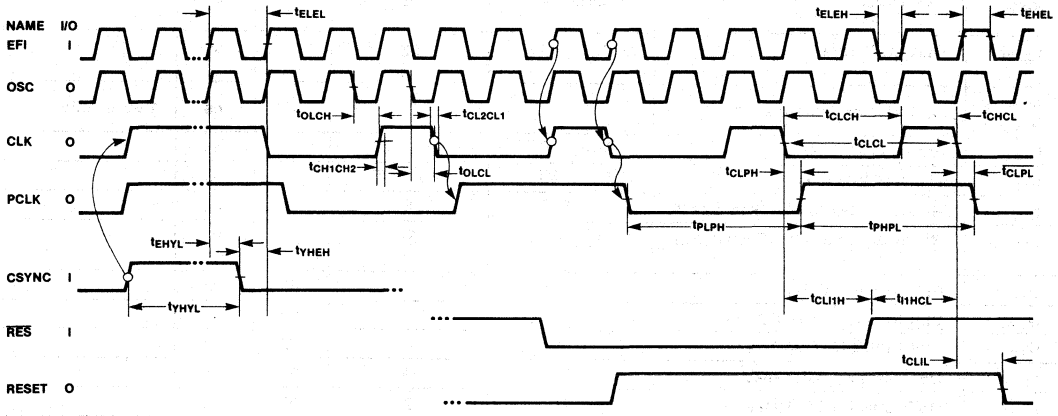

NOTE: ALL TIMING MEASUREMENTS ARE MADE AT 1.5 VOLTS, UNLESS OTHERWISE NOTED.

READY SIGNALS (FOR ASYNCHRONOUS DEVICES)

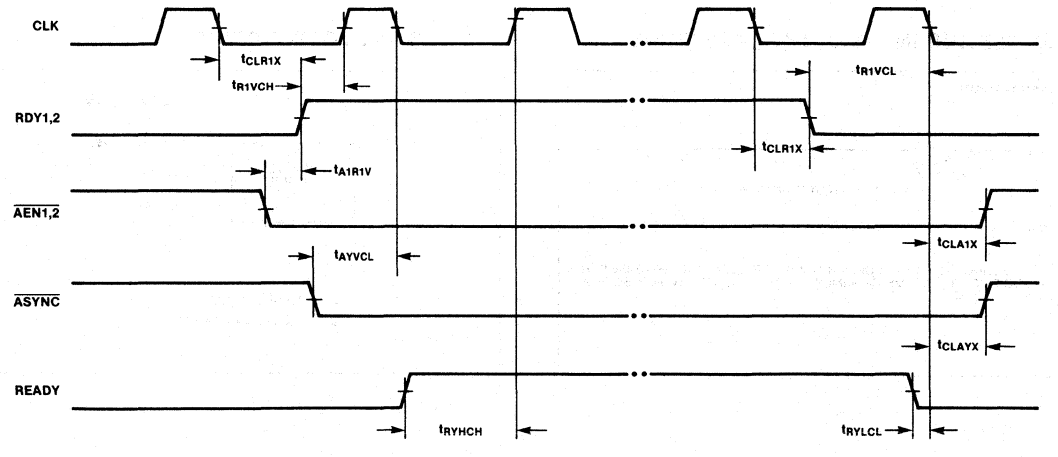

AFN-01472C

WAVEFORMS (Continued)

READY SIGNALS (FOR SYNCHRONOUS DEVICES)

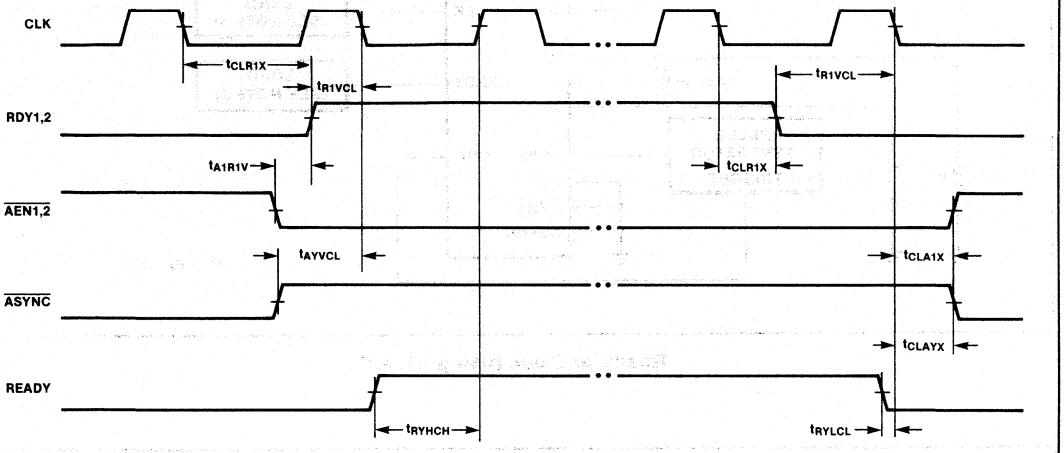

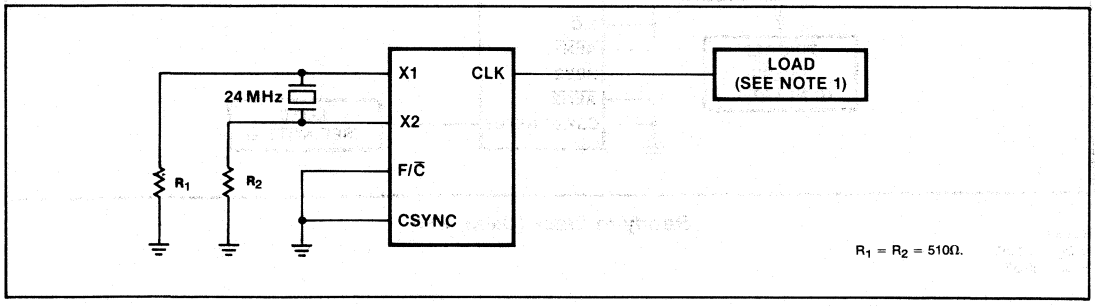

Clock High and Low Time (Using X1, X2)

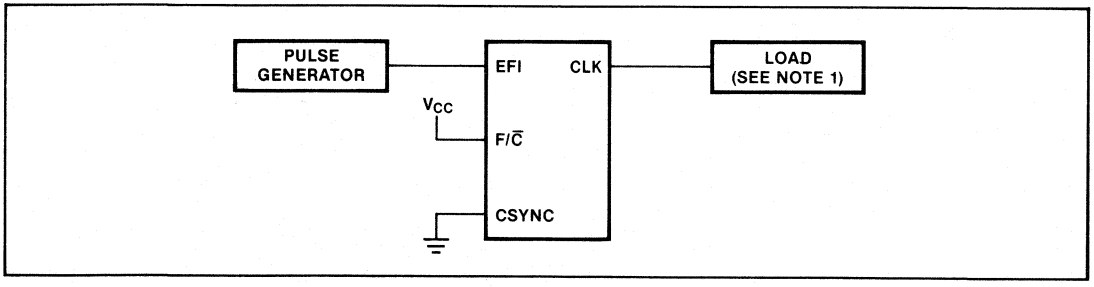

Clock High and Low Time (Using EFI)

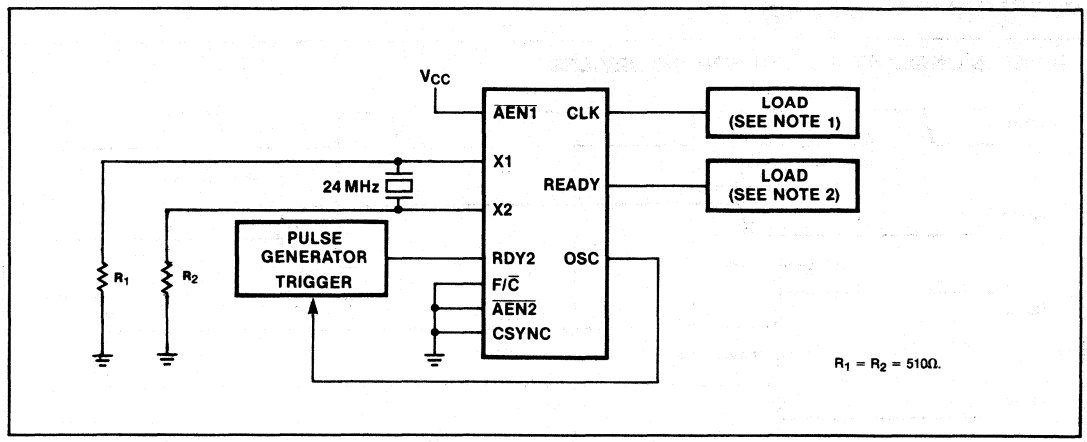

Ready to Clock (Using X1, X2)

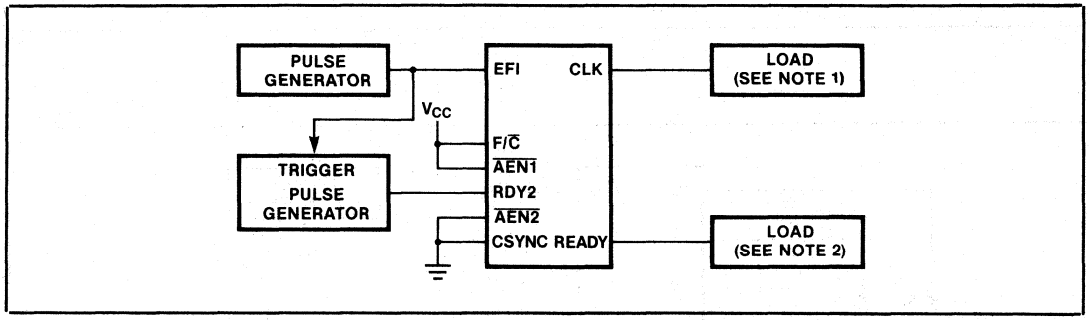

Ready to Clock (Using EFI)

NOTES:
1. C_L = 100 pF
2. C_L = 30 pF

8286/8287
OCTAL BUS TRANSCEIVER

- **Data Bus Buffer Driver for iAPX 86,88, MCS-80™, MCS-85™, and MCS-48™ Families**
- **High Output Drive Capability for Driving System Data Bus**
- **Fully Parallel 8-Bit Transceivers**
- **3-State Outputs**
- **20-Pin Package with 0.3" Center**
- **No Output Low Noise when Entering or Leaving High Impedance State**

The 8286 and 8287 are 8-bit bipolar transceivers with 3-state outputs. The 8287 inverts the input data at its outputs while the 8286 does not. Thus, a wide variety of applications for buffering in microcomputer systems can be met.

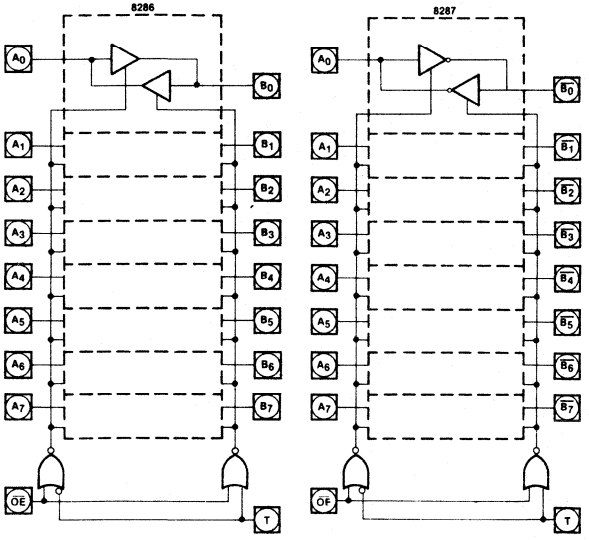

Figure 1. Logic Diagrams

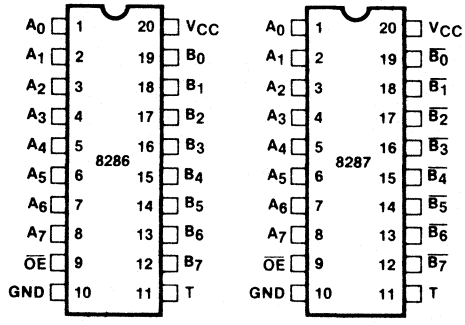

Figure 2. Pin Configurations

Table 1. Pin Description

Symbol	Type	Name and Function
T	I	**Transmit:** T is an input control signal used to control the direction of the transceivers. When HIGH, it configures the transceiver's B_0–B_7 as outputs with A_0–A_7 as inputs. T LOW configures A_0–A_7 as the outputs with B_0–B_7 serving as the inputs.
$\overline{OE}$	I	**Output Enable:** $\overline{OE}$ is an input control signal used to enable the appropriate output driver (as selected by T) onto its respective bus. This signal is active LOW.
A_0–A_7	I/O	**Local Bus Data Pins:** These pins serve to either present data to or accept data from the processor's local bus depending upon the state of the T pin.
B_0–B_7(8286) $\overline{B_0}$–$\overline{B_7}$(8287)	I/O	**System Bus Data Pins:** These pins serve to either present data to or accept data from the system bus depending upon the state of the T pin.

FUNCTIONAL DESCRIPTION

The 8286 and 8287 transceivers are 8-bit transceivers with high impedance outputs. With T active HIGH and $\overline{OE}$ active LOW, data at the A_0–A_7 pins is driven onto the B_0–B_7 pins. With T inactive LOW and $\overline{OE}$ active LOW, data at the B_0–B_7 pins is driven onto the A_0–A_7 pins. No output low glitching will occur whenever the transceivers are entering or leaving the high impedance state.

TEST LOAD CIRCUITS

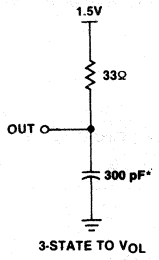

B OUTPUT

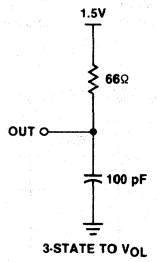

A OUTPUT

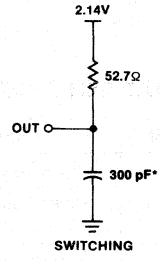

B OUTPUT

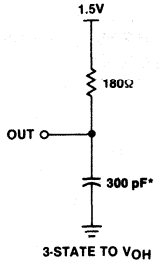

B OUTPUT

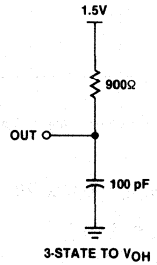

A OUTPUT

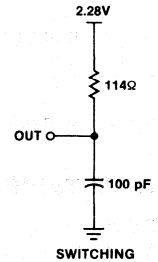

A OUTPUT

*200 pF for plastic 8286/8287

ABSOLUTE MAXIMUM RATINGS*

Temperature Under Bias . . . . . 0°C to 70°C
Storage Temperature . . . . . −65°C to +150°C
All Output and Supply Voltages . . . . . −0.5V to +7V
All Input Voltages . . . . . −1.0V to +5.5V
Power Dissipation . . . . . 1 Watt

**NOTICE: Stresses above those listed under "Absolute Maximum Ratings" may cause permanent damage to the device. This is a stress rating only and functional operation of the device at these or any other conditions above those indicated in the operational sections of this specification is not implied. Exposure to absolute maximum rating conditions for extended periods may affect device reliability.*

D.C. CHARACTERISTICS (V_{CC} = +5V ±10%, T_A = 0°C to 70°C)

Symbol	Parameter	Min	Max	Units	Test Conditions
V_C	Input Clamp Voltage		-1	V	I_C = -5 mA
I_{CC}	Power Supply Current—8287 —8286		130 160	mA mA	
I_F	Forward Input Current		-0.2	mA	V_F = 0.45V
I_R	Reverse Input Current		50	μA	V_R = 5.25V
V_{OL}	Output Low Voltage —B Outputs —A Outputs		.45 .45	V V	I_{OL} = 32 mA I_{OL} = 16 mA
V_{OH}	Output High Voltage —B Outputs —A Outputs	2.4 2.4		V V	I_{OH} = -5 mA I_{OH} = -1 mA
I_{OFF} I_{OFF}	Output Off Current Output Off Current		I_F I_R		V_{OFF} = 0.45V V_{OFF} = 5.25V
V_{IL}	Input Low Voltage —A Side —B Side		0.8 0.9	V V	V_{CC} = 5.0V, See Note 1 V_{CC} = 5.0V, See Note 1
V_{IH}	Input High Voltage	2.0		V	V_{CC} = 5.0V, See Note 1
C_{IN}	Input Capacitance		12	pF	F = 1 MHz V_{BIAS} = 2.5V, V_{CC} = 5V T_A = 25°C

NOTE:
1. B Outputs—I_{OL} = 32 mA, I_{OH} = −5 mA, C_L = 300 pF*: A Outputs—I_{OL} = 16 mA, I_{OH} = −1 mA, C_L = 100 pF.

A.C. CHARACTERISTICS (V_{CC} = +5V ±10%, T_A = 0°C to 70°C)

Loading: B Outputs—I_{OL} = 32 mA, I_{OH} = −5 mA, C_L = 300 pF*
A Outputs—I_{OL} = 16 mA, I_{OH} = −1 mA, C_L = 100 pF

Symbol	Parameter	Min	Max	Units	Test Conditions
TIVOV	Input to Output Delay Inverting Non-Inverting	 5 5	 22 30	 ns ns	 (See Note 1)
TEHTV	Transmit/Receive Hold Time	5		ns	
TTVEL	Transmit/Receive Setup	10		ns	
TEHOZ	Output Disable Time	5	18	ns	
TELOV	Output Enable Time	10	30	ns	
TILIH, TOLOH	Input, Output Rise Time		20	ns	From 0.8 V to 2.0V
TIHIL, TOHOL	Input, Output Fall Time		12	ns	From 2.0V to 8.0V

*C_L = 200 pF for plastic 8286/8287

NOTE:
1. See waveforms and test load circuit on following page.

WAVEFORMS

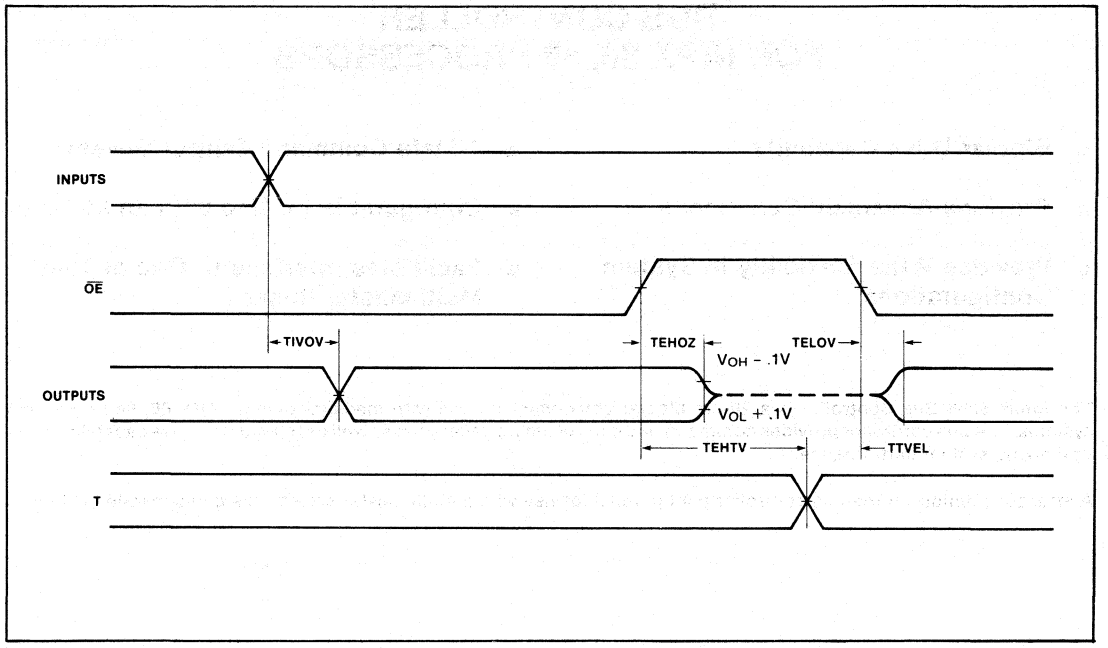

NOTE:

1. All timing measurements are made at 1.5V unless otherwise noted.

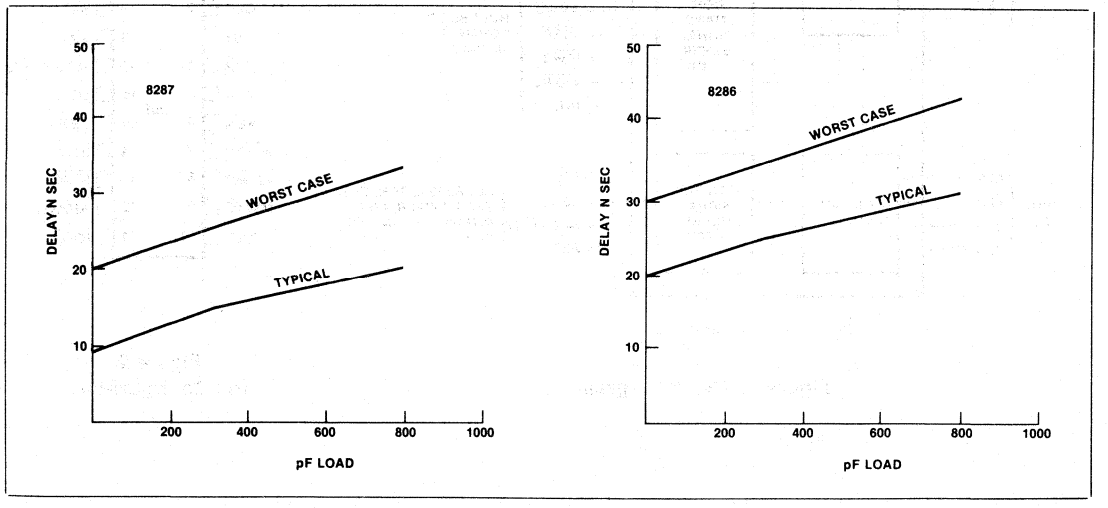

Output Delay versus Capacitance

8288
BUS CONTROLLER FOR iAPX 86, 88 PROCESSORS

- **Bipolar Drive Capability**
- **Provides Advanced Commands**
- **Provides Wide Flexibility in System Configurations**
- **3-State Command Output Drivers**
- **Configurable for Use with an I/O Bus**
- **Facilitates Interface to One or Two Multi-Master Busses**

The Intel® 8288 Bus Controller is a 20-pin bipolar component for use with medium-to-large iAPX 86, 88 processing systems. The bus controller provides command and control timing generation as well as bipolar bus drive capability while optimizing system performance.

A strapping option on the bus controller configures it for use with a multi-master system bus and separate I/O bus.

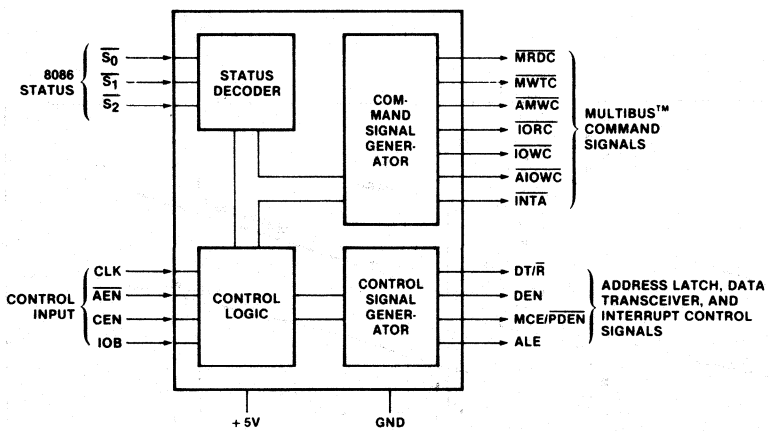

Figure 1. Block Diagram

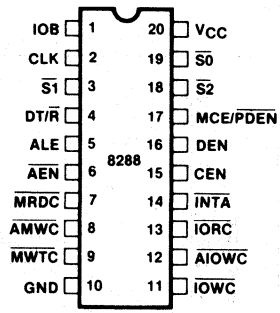

Figure 2. Pin Configuration

Table 1. Pin Description

Symbol	Type	Name and Function
V_{CC}		**Power:** +5V supply.
GND		**Ground.**
$\overline{S_0}$, $\overline{S_1}$, $\overline{S_2}$	I	**Status Input Pins:** These pins are the status input pins from the 8086, 8088 or 8089 processors. The 8288 decodes these inputs to generate command and control signals at the appropriate time. When these pins are not in use (passive) they are all HIGH. (See chart under Command and Control Logic.)
CLK	I	**Clock:** This is a clock signal from the 8284 clock generator and serves to establish when command and control signals are generated.
ALE	O	**Address Latch Enable:** This signal serves to strobe an address into the address latches. This signal is active HIGH and latching occurs on the falling (HIGH to LOW) transition. ALE is intended for use with transparent D type latches.
DEN	O	**Data Enable:** This signal serves to enable data transceivers onto either the local or system data bus. This signal is active HIGH.
DT/$\overline{R}$	O	**Data Transmit/Receive:** This signal establishes the direction of data flow through the transceivers. A HIGH on this line indicates Transmit (write to I/O or memory) and a LOW indicates Receive (Read).
$\overline{AEN}$	I	**Address Enable:** $\overline{AEN}$ enables command outputs of the 8288 Bus Controller at least 115 ns after it becomes active (LOW). $\overline{AEN}$ going inactive immediately 3-states the command output drivers. $\overline{AEN}$ does not affect the I/O command lines if the 8288 is in the I/O Bus mode (IOB tied HIGH).
CEN	I	**Command Enable:** When this signal is LOW all 8288 command outputs and the DEN and $\overline{PDEN}$ control outputs are forced to their inactive state. When this signal is HIGH, these same outputs are enabled.
IOB	I	**Input/Output Bus Mode:** When the IOB is strapped HIGH the 8288 functions in the I/O Bus mode. When it is strapped LOW, the 8288 functions in the System Bus mode. (See sections on I/O Bus and System Bus modes).

Symbol	Type	Name and Function
$\overline{AIOWC}$	O	**Advanced I/O Write Command:** The $\overline{AIOWC}$ issues an I/O Write Command earlier in the machine cycle to give I/O devices an early indication of a write instruction. Its timing is the same as a read command signal. $\overline{AIOWC}$ is active LOW.
$\overline{IOWC}$	O	**I/O Write Command:** This command line instructs an I/O device to read the data on the data bus. This signal is active LOW.
$\overline{IORC}$	O	**I/O Read Command:** This command line instructs an I/O device to drive its data onto the data bus. This signal is active LOW.
$\overline{AMWC}$	O	**Advanced Memory Write Command:** The $\overline{AMWC}$ issues a memory write command earlier in the machine cycle to give memory devices an early indication of a write instruction. Its timing is the same as a read command signal. $\overline{AMWC}$ is active LOW.
$\overline{MWTC}$	O	**Memory Write Command:** This command line instructs the memory to record the data present on the data bus. This signal is active LOW.
$\overline{MRDC}$	O	**Memory Read Command:** This command line instructs the memory to drive its data onto the data bus. This signal is active LOW.
$\overline{INTA}$	O	**Interrupt Acknowledge:** This command line tells an interrupting device that its interrupt has been acknowledged and that it should drive vectoring information onto the data bus. This signal is active LOW.
MCE/$\overline{PDEN}$	O	This is a dual function pin. **MCE (IOB is tied LOW):** Master Cascade Enable occurs during an interrupt sequence and serves to read a Cascade Address from a master PIC (Priority Interrupt Controller) onto the data bus. The MCE signal is active HIGH. **$\overline{PDEN}$ (IOB is tied HIGH):** Peripheral Data Enable enables the data bus transceiver for the I/O bus that DEN performs for the system bus. $\overline{PDEN}$ is active LOW.

FUNCTIONAL DESCRIPTION

Command and Control Logic

The command logic decodes the three 8086, 8088 or 8089 CPU status lines ($\overline{S_0}$, $\overline{S_1}$, $\overline{S_2}$) to determine what command is to be issued.

This chart shows the meaning of each status "word".

$\overline{S_2}$	$\overline{S_1}$	$\overline{S_0}$	Processor State	8288 Command
0	0	0	Interrupt Acknowledge	$\overline{INTA}$
0	0	1	Read I/O Port	$\overline{IORC}$
0	1	0	Write I/O Port	IOWC, AIOWC
0	1	1	Halt	None
1	0	0	Code Access	$\overline{MRDC}$
1	0	1	Read Memory	$\overline{MRDC}$
1	1	0	Write Memory	$\overline{MWTC}$, $\overline{AMWC}$
1	1	1	Passive	None

The command is issued in one of two ways dependent on the mode of the 8288 Bus Controller.

I/O Bus Mode — The 8288 is in the I/O Bus mode if the IOB pin is strapped HIGH. In the I/O Bus mode all I/O command lines ($\overline{IORC}$, $\overline{IOWC}$, $\overline{AIOWC}$, $\overline{INTA}$) are always enabled (i.e., not dependent on $\overline{AEN}$). When an I/O command is initiated by the processor, the 8288 immediately activates the command lines using $\overline{PDEN}$ and DT/$\overline{R}$ to control the I/O bus transceiver. The I/O command lines should not be used to control the system bus in this configuration because no arbitration is present. This mode allows one 8288 Bus Controller to handle two external busses. No waiting is involved when the CPU wants to gain access to the I/O bus. Normal memory access requires a "Bus Ready" signal ($\overline{AEN}$ LOW) before it will proceed. It is advantageous to use the IOB mode if I/O or peripherals dedicated to one processor exist in a multi-processor system.

System Bus Mode — The 8288 is in the System Bus mode if the IOB pin is strapped LOW. In this mode no command is issued until 115 ns after the $\overline{AEN}$ Line is activated (LOW). This mode assumes bus arbitration logic will inform the bus controller (on the $\overline{AEN}$ line) when the bus is free for use. Both memory and I/O commands wait for bus arbitration. This mode is used when only one bus exists. Here, both I/O and memory are shared by more than one processor.

COMMAND OUTPUTS

The advanced write commands are made available to initiate write procedures early in the machine cycle. This signal can be used to prevent the processor from entering an unnecessary wait state.

The command outputs are:

- $\overline{MRDC}$ — Memory Read Command
- $\overline{MWTC}$ — Memory Write Command
- $\overline{IORC}$ — I/O Read Command
- $\overline{IOWC}$ — I/O Write Command
- $\overline{AMWC}$ — Advanced Memory Write Command
- $\overline{AIOWC}$ — Advanced I/O Write Command
- $\overline{INTA}$ — Interrupt Acknowledge

$\overline{INTA}$ (Interrupt Acknowledge) acts as an I/O read during an interrupt cycle. Its purpose is to inform an interrupting device that its interrupt is being acknowledged and that it should place vectoring information onto the data bus.

CONTROL OUTPUTS

The control outputs of the 8288 are Data Enable (DEN), Data Transmit/Receive (DT/$\overline{R}$) and Master Cascade Enable/Peripheral Data Enable (MCE/$\overline{PDEN}$). The DEN signal determines when the external bus should be enabled onto the local bus and the DT/$\overline{R}$ determines the direction of data transfer. These two signals usually go to the chip select and direction pins of a transceiver.

The MCE/$\overline{PDEN}$ pin changes function with the two modes of the 8288. When the 8288 is in the IOB mode (IOB HIGH) the $\overline{PDEN}$ signal serves as a dedicated data enable signal for the I/O or Peripheral System bus.

INTERRUPT ACKNOWLEDGE AND MCE

The MCE signal is used during an interrupt acknowledge cycle if the 8288 is in the System Bus mode (IOB LOW). During any interrupt sequence there are two interrupt acknowledge cycles that occur back to back. During the first interrupt cycle no data or address transfers take place. Logic should be provided to mask off MCE during this cycle. Just before the second cycle begins the MCE signal gates a master Priority Interrupt Controller's (PIC) cascade address onto the processor's local bus where ALE (Address Latch Enable) strobes it into the address latches. On the leading edge of the second interrupt cycle the addressed slave PIC gates an interrupt vector onto the system data bus where it is read by the processor.

If the system contains only one PIC, the MCE signal is not used. In this case the second Interrupt Acknowledge signal gates the interrupt vector onto the processor bus.

ADDRESS LATCH ENABLE AND HALT

Address Latch Enable (ALE) occurs during each machine cycle and serves to strobe the current address into the address latches. ALE also serves to strobe the status ($\overline{S_0}$, $\overline{S_1}$, $\overline{S_2}$) into a latch for halt state decoding.

COMMAND ENABLE

The Command Enable (CEN) input acts as a command qualifier for the 8288. If the CEN pin is high the 8288 functions normally. If the CEN pin is pulled LOW, all command lines are held in their inactive state (not 3-state). This feature can be used to implement memory partitioning and to eliminate address conflicts between system bus devices and resident bus devices.

ABSOLUTE MAXIMUM RATINGS*

Temperature Under Bias ..... 0°C to 70°C
Storage Temperature ..... −65°C to +150°C
All Output and Supply Voltages ..... −0.5V to +7V
All Input Voltages ..... −1.0V to +5.5V
Power Dissipation ..... 1.5 Watt

**NOTICE: Stresses above those listed under "Absolute Maximum Ratings" may cause permanent damage to the device. This is a stress rating only and functional operation of the device at these or any other conditions above those indicated in the operational sections of this specification is not implied. Exposure to absolute maximum rating conditions for extended periods may affect device reliability.*

D.C. CHARACTERISTICS (V_{CC} = 5V ± 10%, T_A = 0°C to 70°C)

Symbol	Parameter	Min.	Max.	Unit	Test Conditions
V_C	Input Clamp Voltage		−1	V	I_C = −5 mA
I_{CC}	Power Supply Current		230	mA	
I_F	Forward Input Current		−0.7	mA	V_F = 0.45V
I_R	Reverse Input Current		50	μA	V_R = V_{CC}
V_{OL}	Output Low Voltage				
	Command Outputs		0.5	V	I_{OL} = 32 mA
	Control Outputs		0.5	V	I_{OL} = 16 mA
V_{OH}	Output High Voltage				
	Command Outputs	2.4		V	I_{OH} = −5 mA
	Control Outputs	2.4		V	I_{OH} = −1 mA
V_{IL}	Input Low Voltage		0.8	V	
V_{IH}	Input High Voltage	2.0		V	
I_{OFF}	Output Off Current		100	μA	V_{OFF} = 0.4 to 5.25V

A.C. CHARACTERISTICS (V_{CC} = 5V ± 10%, T_A = 0°C to 70°C)

TIMING REQUIREMENTS

Symbol	Parameter	Min.	Max.	Unit	Test Conditions
TCLCL	CLK Cycle Period	100		ns	
TCLCH	CLK Low Time	50		ns	
TCHCL	CLK High Time	30		ns	
TSVCH	Status Active Setup Time	35		ns	
TCHSV	Status Active Hold Time	10		ns	
TSHCL	Status Inactive Setup Time	35		ns	
TCLSH	Status Inactive Hold Time	10		ns	
TILIH	Input, Rise Time		20	ns	From 0.8V to 2.0V
TIHIL	Input, Fall Time		12	ns	From 2.0V to 0.8V

A.C. CHARACTERISTICS (Continued)

TIMING RESPONSES

Symbol	Parameter	Min.	Max.	Unit	Test Conditions
TCVNV	Control Active Delay	5	45	ns	
TCVNX	Control Inactive Delay	10	45	ns	
TCLLH, TCLMCH	ALE MCE Active Delay (from CLK)		20	ns	
TSVLH, TSVMCH	ALE MCE Active Delay (from Status)		20	ns	
TCHLL	ALE Inactive Delay	4	15	ns	$\overline{MRDC}$, $\overline{IORC}$, $\overline{MWTC}$, $\overline{IOWC}$, $\overline{INTA}$, $\overline{AMWC}$, $\overline{AIOWC}$: I_{OL} = 32 mA, I_{OH} = −5 mA, C_L = 300 pF
TCLML	Command Active Delay	10	35	ns	
TCLMH	Command Inactive Delay	10	35	ns	
TCHDTL	Direction Control Active Delay		50	ns	
TCHDTH	Direction Control Inactive Delay		30	ns	
TAELCH	Command Enable Time		40	ns	
TAEHCZ	Command Disable Time		40	ns	
TAELCV	Enable Delay Time	115	200	ns	Other: I_{OL} = 16 mA, I_{OH} = −1 mA, C_L = 80 pF
TAEVNV	AEN to DEN		20	ns	
TCEVNV	CEN to DEN, PDEN		25	ns	
TCELRH	CEN to Command		TCLML	ns	
TOLOH	Output, Rise Time		20	ns	From 0.8V to 2.0V
TOHOL	Output, Fall Time		12	ns	From 2.0V to 0.8V

A.C. TESTING INPUT, OUTPUT WAVEFORM

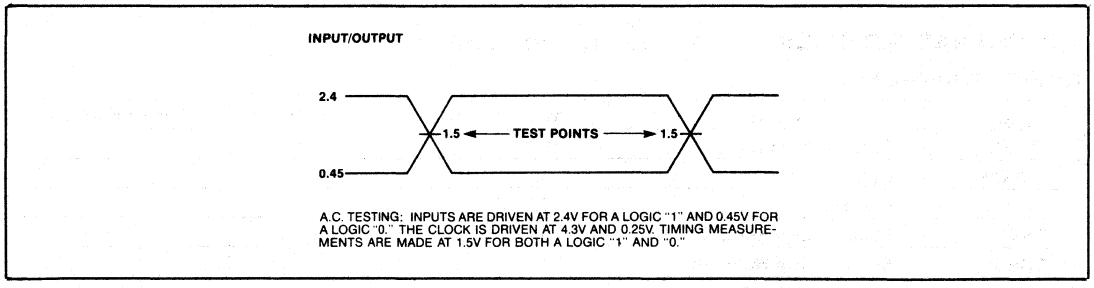

A.C. TESTING: INPUTS ARE DRIVEN AT 2.4V FOR A LOGIC "1" AND 0.45V FOR A LOGIC "0." THE CLOCK IS DRIVEN AT 4.3V AND 0.25V. TIMING MEASUREMENTS ARE MADE AT 1.5V FOR BOTH A LOGIC "1" AND "0."

TEST LOAD CIRCUITS—3-STATE COMMAND OUTPUT TEST LOAD

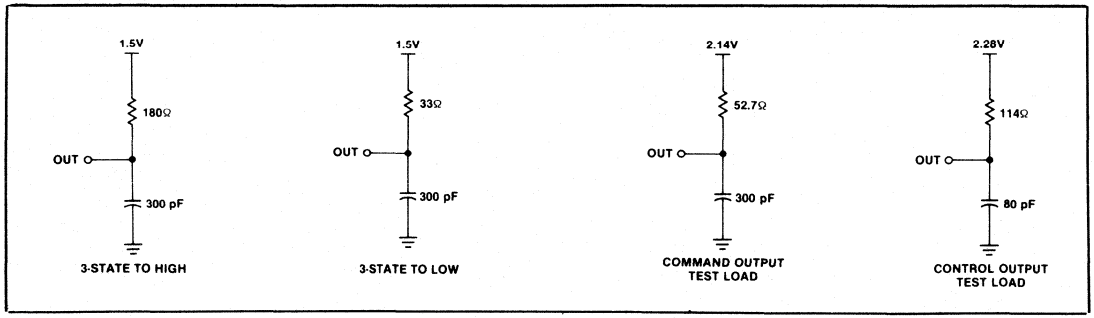

WAVEFORMS

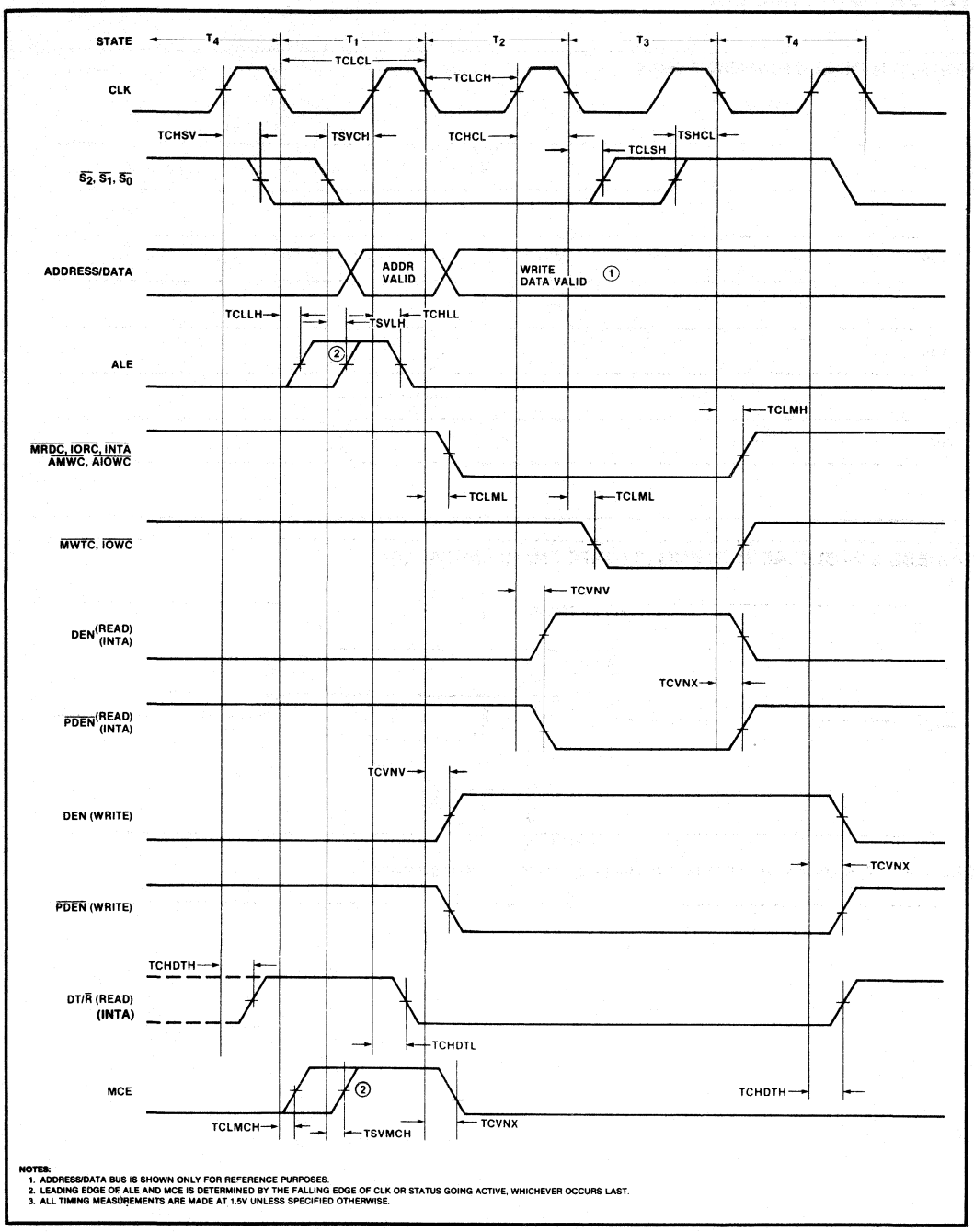

NOTES:
1. ADDRESS/DATA BUS IS SHOWN ONLY FOR REFERENCE PURPOSES.
2. LEADING EDGE OF ALE AND MCE IS DETERMINED BY THE FALLING EDGE OF CLK OR STATUS GOING ACTIVE, WHICHEVER OCCURS LAST.
3. ALL TIMING MEASUREMENTS ARE MADE AT 1.5V UNLESS SPECIFIED OTHERWISE.

WAVEFORMS (Continued)

DEN, PDEN QUALIFICATION TIMING

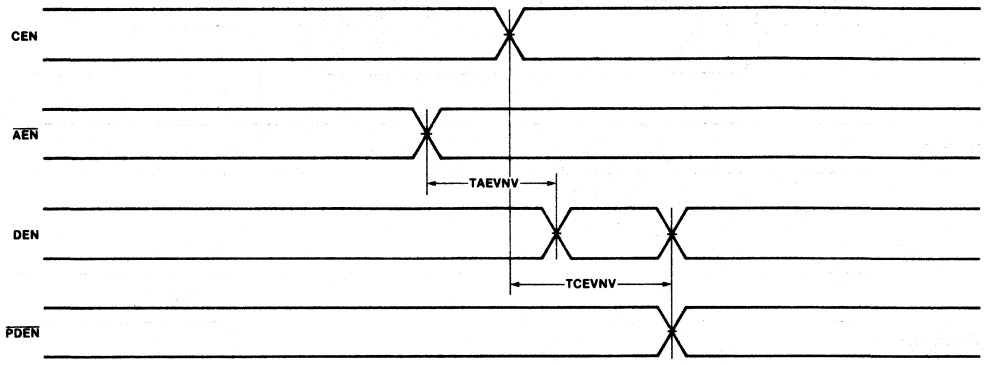

ADDRESS ENABLE (AEN) TIMING (3-STATE ENABLE/DISABLE)

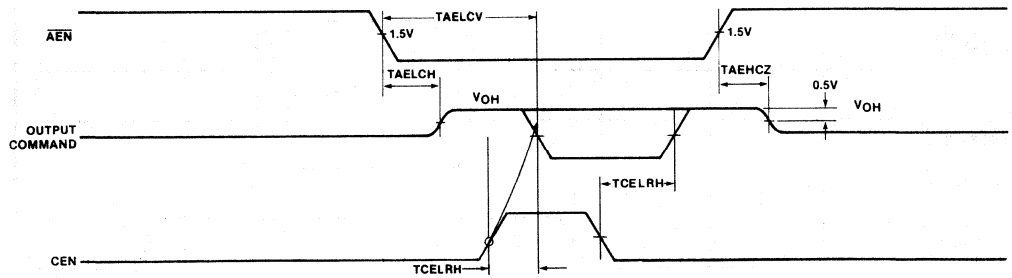

NOTE: CEN must be low or valid prior to T2 to prevent the command from being generated.

PRELIMINARY

8289
BUS ARBITER

- **Provides Multi-Master System Bus Protocol**
- **Synchronizes iAPX 86, 88 Processors with Multi-Master Bus**
- **Provides Simple Interface with 8288 Bus Controller**
- **Four Operating Modes for Flexible System Configuration**
- **Compatible with Intel Bus Standard MULTIBUS™**
- **Provides System Bus Arbitration for 8089 IOP in Remote Mode**

The Intel 8289 Bus Arbiter is a 20-pin, 5-volt-only bipolar component for use with medium to large iAPX 86, 88 multi-master/multiprocessing systems. The 8289 provides system bus arbitration for systems with multiple bus masters, such as an 8086 CPU with 8089 IOP in its REMOTE mode, while providing bipolar buffering and drive capability.

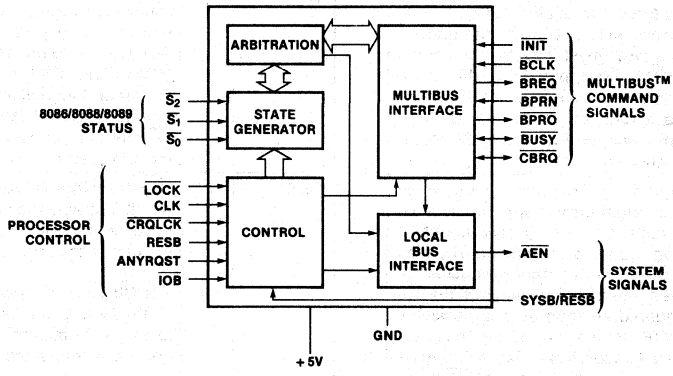

Figure 1. Block Diagram

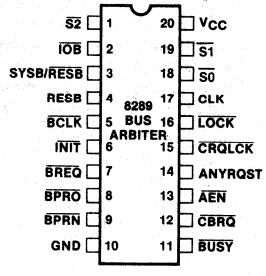

Figure 2. Pin Diagram

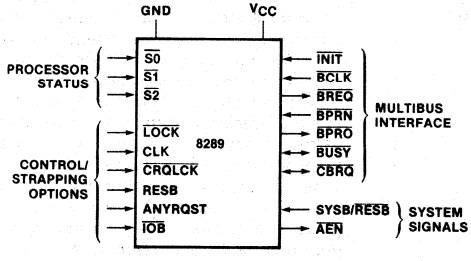

Figure 3. Functional Pinout

Table 1. Pin Description

Symbol	Type	Name and Function
V_{CC}		**Power:** +5V supply ±10%.
GND		**Ground.**
$\overline{S0}$,$\overline{S1}$,$\overline{S2}$	I	**Status Input Pins:** The status input pins from an 8086, 8088 or 8089 processor. The 8289 decodes these pins to initiate bus request and surrender actions. (See Table 2.)
CLK	I	**Clock:** From the 8284 clock chip and serves to establish when bus arbiter actions are initiated.
$\overline{LOCK}$	I	**Lock:** A processor generated signal which when activated (low) prevents the arbiter from surrendering the multi-master system bus to any other bus artiter, regardless of its priority.
$\overline{CRQLCK}$	I	**Common Request Lock:** An active low signal which prevents the arbiter from surrendering the multi-master system bus to any other bus arbiter requesting the bus through the $\overline{CBRQ}$ input pin.
RESB	I	**Resident Bus:** A strapping option to configure the arbiter to operate in systems having both a multi-master system bus and a Resident Bus. Strapped high, the multi-master system bus is requested or surrendered as a function of the SYSB/$\overline{RESB}$ input pin. Strapped low, the SYSB/$\overline{RESB}$ input is ignored.
ANYRQST	I	**Any Request:** A strapping option which permits the multi-master system bus to be surrendered to a lower priority arbiter as if it were an arbiter of higher priority (i.e., when a lower priority arbiter requests the use of the multi-master system bus, the bus is surrendered as soon as it is possible). When ANYRQST is strapped low, the bus is surrendered according to Table 2. If ANYRQST is strapped high and $\overline{CBRQ}$ is activated, the bus is surrendered at the end of the present bus cycle. Strapping $\overline{CBRQ}$ low and ANYRQST high forces the 8289 arbiter to surrender the multi-master system bus after each transfer cycle. Note that when surrender occurs BREQ is driven false (high).
$\overline{IOB}$	I	**IO Bus:** A strapping option which configures the 8289 Arbiter to operate in systems having both an IO Bus (Peripheral Bus) and a multi-master system bus. The arbiter requests and surrenders the use of the multi-master system bus as a function of the status line, $\overline{S2}$. The multi-master system bus is permitted to be surrendered while the processor is performing IO commands and is requested whenever the processor performs a memory command. Interrupt cycles are assumed as coming from the peripheral bus and are treated as an IO command.
$\overline{AEN}$	O	**Address Enable:** The output of the 8289 Arbiter to the processor's address latches, to the 8288 Bus Controller and 8284A Clock Generator. $\overline{AEN}$ serves to instruct the Bus Controller and address latches when to tri-state their output drivers.
SYSB/ $\overline{RESB}$	I	**System Bus/Resident Bus:** An input signal when the arbiter is configured in the S.R. Mode (RESB is strapped high) which determines when the multi-master system bus is requested and multi-master system bus surrendering is permitted. The signal is intended to originate from a form of address-mapping circuitry, as a decoder or PROM attached to the resident address bus. Signal transitions and glitches are permitted on this pin from ϕ1 of T4 to ϕ 1 of T2 of the processor cycle. During the period from ϕ1 of T2 to ϕ 1 of T4, only clean transitions are permitted on this pin (no glitches). If a glitch occurs, the arbiter may capture or miss it, and the multi-master system bus may be requested or surrendered, depending upon the state of the glitch. The arbiter requests the multi-master system bus in the S.R. Mode when the state of the SYSB/$\overline{RESB}$ pin is high and permits the bus to be surrendered when this pin is low.
$\overline{CBRQ}$	I/O	**Common Bus Request:** An input signal which instructs the arbiter if there are any other arbiters of lower priority requesting the use of the multi-master system bus. The $\overline{CBRQ}$ pins (open-collector output) of all the 8289 Bus Arbiters which surrender to the multi-master system bus upon request are connected together. The Bus Arbiter running the current transfer cycle will not itself pull the $\overline{CBRQ}$ line low. Any other arbiter connected to the $\overline{CBRQ}$ line can request the multi-master system bus. The arbiter presently running the current transfer cycle drops its $\overline{BREQ}$ signal and surrenders the bus whenever the proper surrender conditions exist. Strapping $\overline{CBRQ}$ low and ANYRQST high allows the multi-master system bus to be surrendered after each transfer cycle. See the pin definition of ANYRQST.
$\overline{INIT}$	I	**Initialize:** An active low multi-master system bus input signal used to reset all the bus arbiters on the multi-master system bus. After initialization, no arbiters have the use of the multi-master system bus.

Table 1. Pin Descriptions (Continued)

Symbol	Type	Name and Function
$\overline{BCLK}$	I	**Bus Clock:** The multi-master system bus clock to which all multi-master system bus interface signals are synchronized.
$\overline{BREQ}$	O	**Bus Request:** An active low output signal in the parallel Priority Resolving Scheme which the arbiter activates to request the use of the multi-master system bus.
$\overline{BPRN}$	I	**Bus Priority In:** The active low signal returned to the arbiter to instruct it that it may acquire the multi-master system bus on the next falling edge of BCLK. $\overline{BPRN}$ indicates to the arbiter that it is the highest priority requesting arbiter presently on the bus. The loss of $\overline{BPRN}$ instructs the arbiter that it has lost priority to a higher priority arbiter.
$\overline{BPRO}$	O	**Bus Priority Out:** An active low output signal used in the serial priority resolving scheme where $\overline{BPRO}$ is daisy-chained to $\overline{BPRN}$ of the next lower priority arbiter.
$\overline{BUSY}$	I/O	**Busy:** An active low open collector multi-master system bus interface signal used to instruct all the arbiters on the bus when the multi-master system bus is available. When the multi-master system bus is available the highest requesting arbiter (determined by $\overline{BPRN}$) seizes the bus and pulls $\overline{BUSY}$ low to keep other arbiters off of the bus. When the arbiter is done with the bus, it releases the $\overline{BUSY}$ signal, permitting it to go high and thereby allowing another arbiter to acquire the multi-master system bus.

FUNCTIONAL DESCRIPTION

The 8289 Bus Arbiter operates in conjunction with the 8288 Bus Controller to interface iAPX 86, 88 processors to a multi-master system bus (both the iAPX 86 and iAPX 88 are configured in their max mode). The processor is unaware of the arbiter's existence and issues commands as though it has exclusive use of the system bus. If the processor does not have the use of the multi-master system bus, the arbiter prevents the Bus Controller (8288), the data transceivers and the address latches from accessing the system bus (e.g. all bus driver outputs are forced into the high impedance state). Since the command sequence was not issued by the 8288, the system bus will appear as "Not Ready" and the processor will enter wait states. The processor will remain in Wait until the Bus Arbiter acquires the use of the multi-master system bus whereupon the arbiter will allow the bus controller, the data transceivers, and the address latches to access the system. Typically, once the command has been issued and a data transfer has taken place, a transfer acknowledge (XACK) is returned to the processor to indicate "READY" from the accessed slave device. The processor then completes its transfer cycle. Thus the arbiter serves to multiplex a processor (or bus master) onto a multi-master system bus and avoid contention problems between bus masters.

Arbitration Between Bus Masters

In general, higher priority masters obtain the bus when a lower priority master completes its present transfer cycle. Lower priority bus masters obtain the bus when a higher priority master is not accessing the system bus. A strapping option (ANYRQST) is provided to allow the arbiter to surrender the bus to a lower priority master as though it were a master of higher priority. If there are no other bus masters requesting the bus, the arbiter maintains the bus so long as its processor has not entered the HALT State. The arbiter will not voluntarily surrender the system bus and has to be forced off by another master's bus request, the HALT State being the only exception. Additional strapping options permit other modes of operation wherein the multi-master system bus is surrendered or requested under different sets of conditions.

Priority Resolving Techniques

Since there can be many bus masters on a multi-master system bus, some means of resolving priority between bus masters simultaneously requesting the bus must be provided. The 8289 Bus Arbiter provides several resolving techniques. All the techniques are based on a priority concept that at a given time one bus master will have priority above all the rest. There are provisions for using parallel priority resolving techniques, serial priority resolving techniques, and rotating priority techniques.

PARALLEL PRIORITY RESOLVING

The parallel priority resolving technique uses a separate bus request line ($\overline{BREQ}$) for each arbiter on the multi-master system bus, see Figure 4. Each $\overline{BREQ}$ line enters into a priority encoder which generates the binary address of the highest priority $\overline{BREQ}$ line which is active. The binary address is decoded by a decoder to select the corresponding $\overline{BPRN}$ (Bus Priority In) line to be returned to the highest priority requesting arbiter. The arbiter receiving priority ($\overline{BPRN}$ true) then allows its associated bus master onto the multi-master system bus as soon as it becomes available (i.e., the bus is no longer busy). When one bus arbiter gains priority over another arbiter it cannot immediately seize the bus, it must wait until the present bus transaction is complete.

Upon completing its transaction the present bus occupant recognizes that it no longer has priority and surrenders the bus by releasing $\overline{BUSY}$. $\overline{BUSY}$ is an active low "OR" tied signal line which goes to every bus arbiter on the system bus. When $\overline{BUSY}$ goes inactive (high), the arbiter which presently has bus priority ($\overline{BPRN}$ true) then seizes the bus and pulls $\overline{BUSY}$ low to keep other arbiters off of the bus. See waveform timing diagram, Figure 5. Note that all multi-master system bus transactions are synchronized to the bus clock (BCLK). This allows the parallel priority resolving circuitry or any other priority resolving scheme employed to settle.

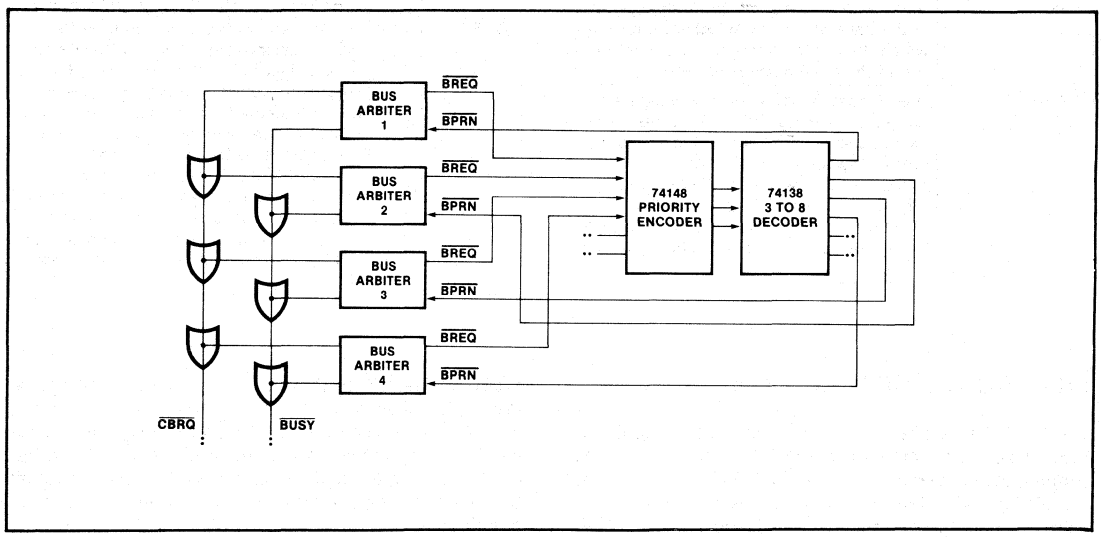

Figure 4. Parallel Priority Resolving Technique

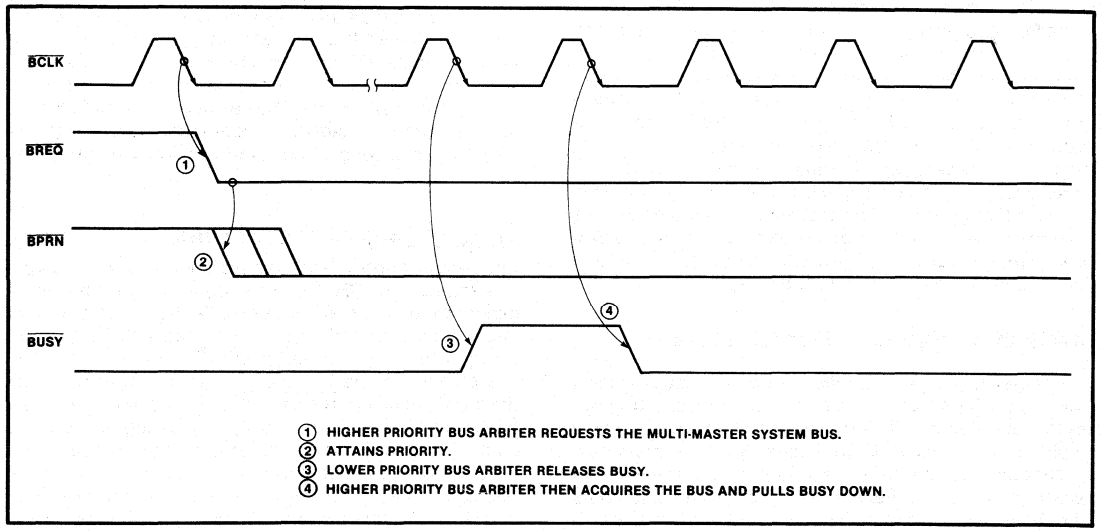

Figure 5. Higher Priority Arbiter obtaining the Bus from a Lower Priority Arbiter

SERIAL PRIORITY RESOLVING

The serial priority resolving technique eliminates the need for the priority encoder-decoder arrangement by daisy-chaining the bus arbiters together, connecting the higher priority bus arbiter's $\overline{BPRO}$ (Bus Priority Out) output to the $\overline{BPRN}$ of the next lower priority. See Figure 6.

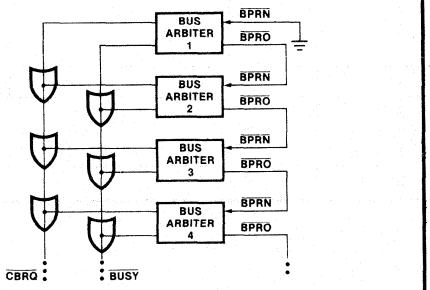

THE NUMBER OF ARBITERS THAT MAY BE DAISY-CHAINED TOGETHER IN THE SERIAL PRIORITY RESOLVING SCHEME IS A FUNCTION OF BCLK AND THE PROPAGATION DELAY FROM ARBITER TO ARBITER. NORMALLY, AT 10 MHz ONLY 3 ARBITER MAY BE DAISY-CHAINED.

Figure 6. Serial Priority Resolving

ROTATING PRIORITY RESOLVING

The rotating priority resolving technique is similar to that of the parallel priority resolving technique except that priority is dynamically re-assigned. The priority encoder is replaced by a more complex circuit which rotates priority between requesting arbiters thus allowing each arbiter an equal chance to use the multi-master system bus, over time.

Which Priority Resolving Technique To Use

There are advantages and disadvantages for each of the techniques described above. The rotating priority resolving technique requires substantial external logic to implement while the serial technique uses no external logic but can accommodate only a limited number of bus arbiters before the daisy-chain propagation delay exceeds the multi-master's system bus clock ($\overline{BCLK}$). The parallel priority resolving technique is in general a good compromise between the other two techniques. It allows for many arbiters to be present on the bus while not requiring too much logic to implement.

8289 MODES OF OPERATION

There are two types of processors in the iAPX 86 family. An Input/Output processor (the 8089 IOP) and the iAPX 86/10, 88/10 CPUs. Consequently, there are two basic operating modes in the 8289 bus arbiter. One, the IOB (I/O Peripheral Bus) mode, permits the processor access to both an I/O Peripheral Bus and a multi-master system bus. The second, the RESB (Resident Bus mode), permits the processor to communicate over both a Resident Bus and a multi-master system bus. An I/O Peripheral Bus is a bus where all devices on that bus, including memory, are treated as I/O devices and are addressed by I/O commands. All memory commands are directed to another bus, the multi-master system bus. A Resident Bus can issue both memory and I/O commands, but it is a distinct and separate bus from the multi-master system bus. The distinction is that the Resident Bus has only one master, providing full availability and being dedicated to that one master.

The $\overline{IOB}$ strapping option configures the 8289 Bus Arbiter into the $\overline{IOB}$ mode and the strapping option RESB configures it into the RESB mode. It might be noted at this point that if both strapping options are strapped false, the arbiter interfaces the processor to a multi-master system bus only (see Figure 7). With both options strapped true, the arbiter interfaces the processor to a multi-master system bus, a Resident Bus, and an I/O Bus.

In the $\overline{IOB}$ mode, the processor communicates and controls a host of peripherals over the Peripheral Bus. When the I/O Processor needs to communicate with system memory, it does so over the system memory bus. Figure 8 shows a possible I/O Processor system configuration.

The iAPX 86 and iAPX 88 processors can communicate with a Resident Bus and a multi-master system bus. Two bus controllers and only one Bus Arbiter would be needed in such a configuration as shown in Figure 9. In such a system configuration the processor would have access to memory and peripherals of both busses. Memory mapping techniques are applied to select which bus is to be accessed. The SYSB/RESB input on the arbiter serves to instruct the arbiter as to whether or not the system bus is to be accessed. The signal connected to SYSB/RESB also enables or disables commands from one of the bus controllers.

A summary of the modes that the 8289 has, along with its response to its status lines inputs, is summarized in Table 2.

*In some system configurations it is possible for a non-I/O Processor to have access to more than one Multi-Master System Bus, see 8289 Application Note.

Table 2. Summary of 8289 Modes, Requesting and Relinquishing the Multi-Master System Bus

	Status Lines From 8086 or 8088 or 8089			IOB Mode Only	RESB (Mode) Only IOB = High RESB = High		IOB Mode RESB Mode IOB = Low RESB = High		Single Bus Mode IOB = High RESB = Low
	$\overline{S2}$	$\overline{S1}$	$\overline{S0}$	$\overline{IOB}$ = Low	SYSB/RESB = High	SYSB/$\overline{RESB}$ = Low	SYSB/$\overline{RESB}$ = High	SYSB/$\overline{RESB}$ = Low	
I/O COMMANDS	0	0	0	x	x		x	x	
	0	0	1	x	x		x	x	
	0	1	0	x	x		x	x	
HALT	0	1	1	x	x	x	x	x	x
MEM COMMANDS	1	0	0		x			x	
	1	0	1		x			x	
	1	1	0		x			x	
IDLE	1	1	1	x	x	x	x	x	x

NOTES:

1. X = Multi-Master System Bus is allowed to be Surrendered.
2. ⌐ = Multi-Master System Bus is Requested.

Mode	Pin Strapping	Multi-Master System Bus	
		Requested**	Surrendered*
Single Bus Multi-Master Mode	$\overline{IOB}$ = High RESB = Low	Whenever the processor's status lines go active	HLT + TI • CBRQ + HPBRQ†
RESB Mode Only	$\overline{IOB}$ = High RESB = High	SYSB/$\overline{RESB}$ = High • ACTIVE STATUS	(SYSB/$\overline{RESB}$ = Low + TI) • CBRQ + HLT + HPBRQ
IOB Mode Only	$\overline{IOB}$ = Low RESB = Low	Memory Commands	(I/O Status + TI) • CBRQ + HLT + HPBRQ
IOB Mode RESB Mode	$\overline{IOB}$ = Low RESB = High	(Memory Command) • (SYSB/$\overline{RESB}$ = High)	((I/O Status Commands) + SYSB/$\overline{RESB}$ = LOW)) • CBRQ + HPBRQ† + HLT

NOTES:

*$\overline{LOCK}$ prevents surrender of Bus to any other arbiter, $\overline{CRQLCK}$ prevents surrender of Bus to any lower priority arbiter.

**Except for HALT and Passive or IDLE Status.

†HPBRQ, Higher priority Bus request or $\overline{BPRN}$ = 1.

1. $\overline{IOB}$ Active Low.
2. RESB Active High.
3. + is read as "OR" and • as "AND."
4. TI = Processor Idle Status $\overline{S2}$, $\overline{S1}$, $\overline{S0}$ = 111
5. HLT = Processor Halt Status $\overline{S2}$, $\overline{S1}$, $\overline{S0}$ = 011

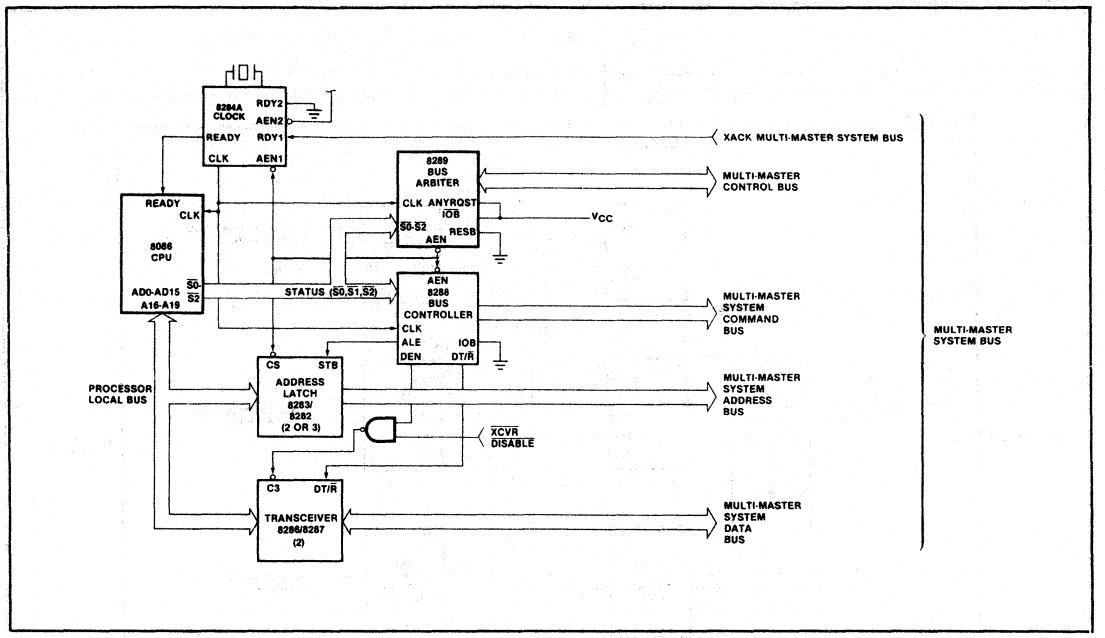

Figure 7. Typical Medium Complexity CPU System

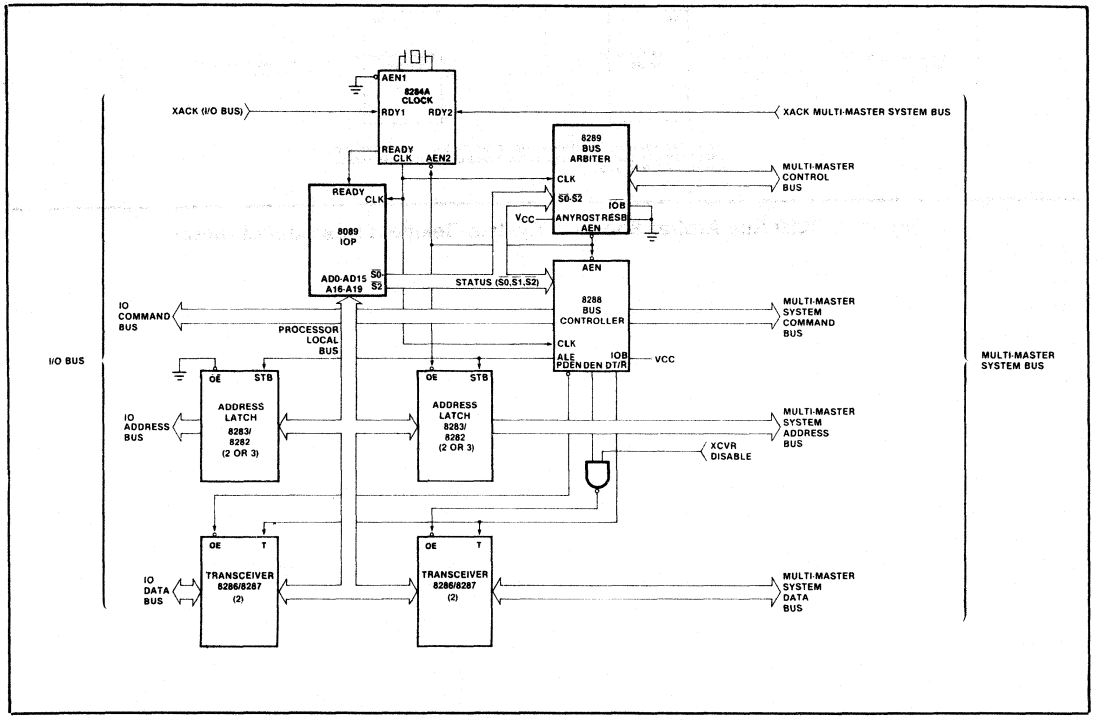

Figure 8. Typical Medium Complexity IOB System

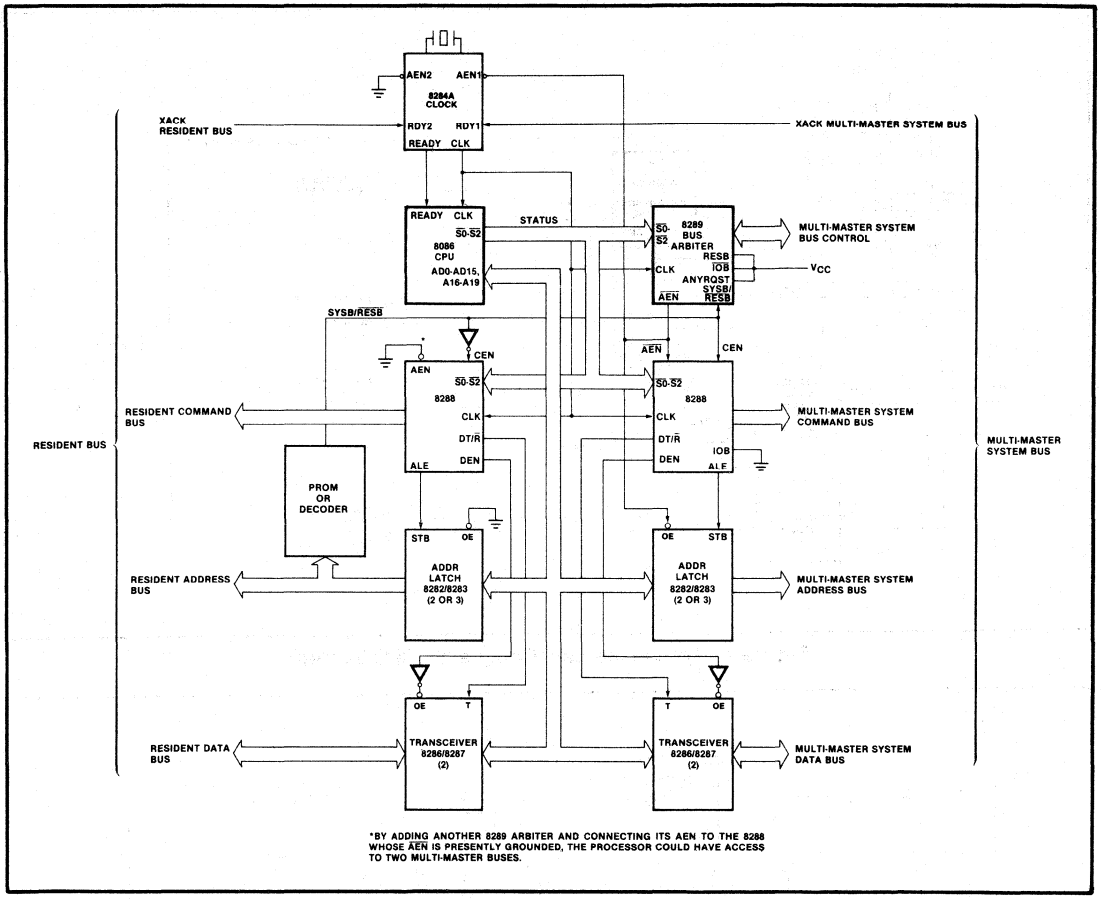

Figure 9. 8289 Bus Arbiter Shown in System-Resident Bus Configuration

ABSOLUTE MAXIMUM RATINGS*

Temperature Under Bias . . . . . 0°C to 70°C
Storage Temperature . . . . . – 65°C to + 150°C
All Output and Supply Voltages . . . . . – 0.5V to + 7V
All Input Voltages . . . . . – 1.0V to + 5.5V
Power Dissipation . . . . . 1.5 Watt

NOTICE: Stresses above those listed under "Absolute Maximum Ratings" may cause permanent damage to the device. This is a stress rating only and functional operation of the device at these or any other conditions above those indicated in the operational sections of this specification is not implied. Exposure to absolute maximum rating conditions for extended periods may affect device reliability.

D.C. CHARACTERISTICS (T_A = 0°C to 70°C, V_{CC} = +5V ±10%)

Symbol	Parameter	Min.	Max.	Units	Test Condition
V_C	Input Clamp Voltage		– 1.0	V	V_{CC} = 4.50V, I_C = – 5 mA
I_F	Input Forward Current		– 0.5	mA	V_{CC} = 5.50V, V_F = 0.45V
I_R	Reverse Input Leakage Current		60	μA	V_{CC} = 5.50, V_R = 5.50
V_{OL}	Output Low Voltage				
	$\overline{BUSY}$, $\overline{CBRQ}$		0.45	V	I_{OL} = 20 mA
	$\overline{AEN}$		0.45	V	I_{OL} = 16 mA
	$\overline{BPRO}$, $\overline{BREQ}$		0.45	V	I_{OL} = 10 mA
V_{OH}	Output High Voltage $\overline{BUSY}$, $\overline{CBRQ}$	Open Collector			
	All Other Outputs	2.4		V	I_{OH} = 400 μA
I_{CC}	Power Supply Current		165	mA	
V_{IL}	Input Low Voltage		.8	V	
V_{IH}	Input High Voltage	2.0		V	
Cin Status	Input Capacitance		25	pF	
Cin (Others)	Input Capacitance		12	pF	

A.C. CHARACTERISTICS (V_{CC} = +5V ±10%, T_A = 0°C to 70°C)

TIMING REQUIREMENTS

Symbol	Parameter	Min.	Max.	Unit	Test Condition
TCLCL	CLK Cycle Period	125		ns	
TCLCH	CLK Low Time	65		ns	
TCHCL	CLK High Time	35		ns	
TSVCH	Status Active Setup	65	TCLCL-10	ns	
TSHCL	Status Inactive Setup	50	TCLCL-10	ns	
THVCH	Status Active Hold	10		ns	
THVCL	Status Inactive Hold	10		ns	
TBYSBL	BUSY↑↓Setup to BCLK↓	20		ns	
TCBSBL	CBRQ↑↓Setup to BCLK↓	20		ns	
TBLBL	BCLK Cycle Time	100		ns	
TBHCL	BCLK High Time	30	.65[TBLBL]	ns	
TCLLL1	LOCK Inactive Hold	10		ns	
TCLLL2	LOCK Active Setup	40		ns	
TPNBL	BPRN↓↑to BCLK Setup Time	15		ns	
TCLSR1	SYSB/RESB Setup	0		ns	
TCLSR2	SYSB/RESB Hold	20		ns	
TIVIH	Initialization Pulse Width	3 TBLBL+ 3 TCLCL		ns	
TILIH	Input Rise Time		20	ns	From 0.8 to 2.0V
TIHIL	Input Fall Time		12	ns	From 2.0V to 0.8V

A.C. CHARACTERISTICS (Continued)

TIMING RESPONSES

Symbol	Parameter	Min.	Max.	Unit	Test Condition
TBLBRL	BCLK to BREQ Delay↓↑		35	ns	
TBLPOH	BCLK to BPRO↓↑ (See Note 1)		40	ns	
TPNPO	BPRN↓↑to BPRO↓↑Delay (See Note 1)		25	ns	
TBLBYL	BCLK to BUSY Low		60	ns	
TBLBYH	BCLK to BUSY Float (See Note 2)		35	ns	
TCLAEH	CLK to AEN High		65	ns	
TBLAEL	BCLK to AEN Low		40	ns	
TBLCBL	BCLK to CBRQ Low		60	ns	
TRLCRH	BCLK to CBRQ Float (See Note 2)		35	ns	
TOLOH	Output Rise Time		20	ns	From 0.8V to 2.0V
TOHOL	Output Fall Time		12	ns	From 2.0V to 0.8V

↓↑ Denotes that spec applies to both transitions of the signal.

NOTES:
1. BCLK generates the first BPRO wherein subsequent BPRO changes lower in the chain are generated through BPRON.
2. Measured at .5V above GND.

A.C. TESTING INPUT, OUTPUT WAVEFORM

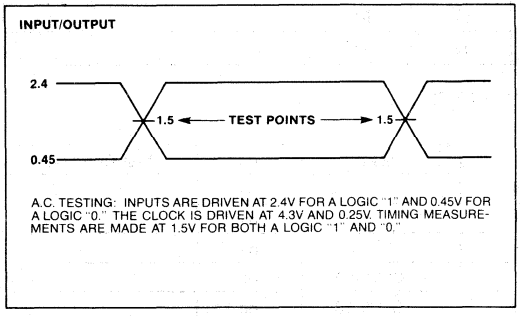

A.C. TESTING: INPUTS ARE DRIVEN AT 2.4V FOR A LOGIC "1" AND 0.45V FOR A LOGIC "0." THE CLOCK IS DRIVEN AT 4.3V AND 0.25V. TIMING MEASUREMENTS ARE MADE AT 1.5V FOR BOTH A LOGIC "1" AND "0."

A.C. TESTING LOAD CIRCUIT

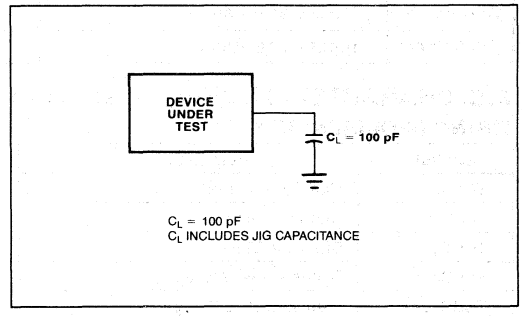

C_L = 100 pF
C_L INCLUDES JIG CAPACITANCE

WAVEFORMS

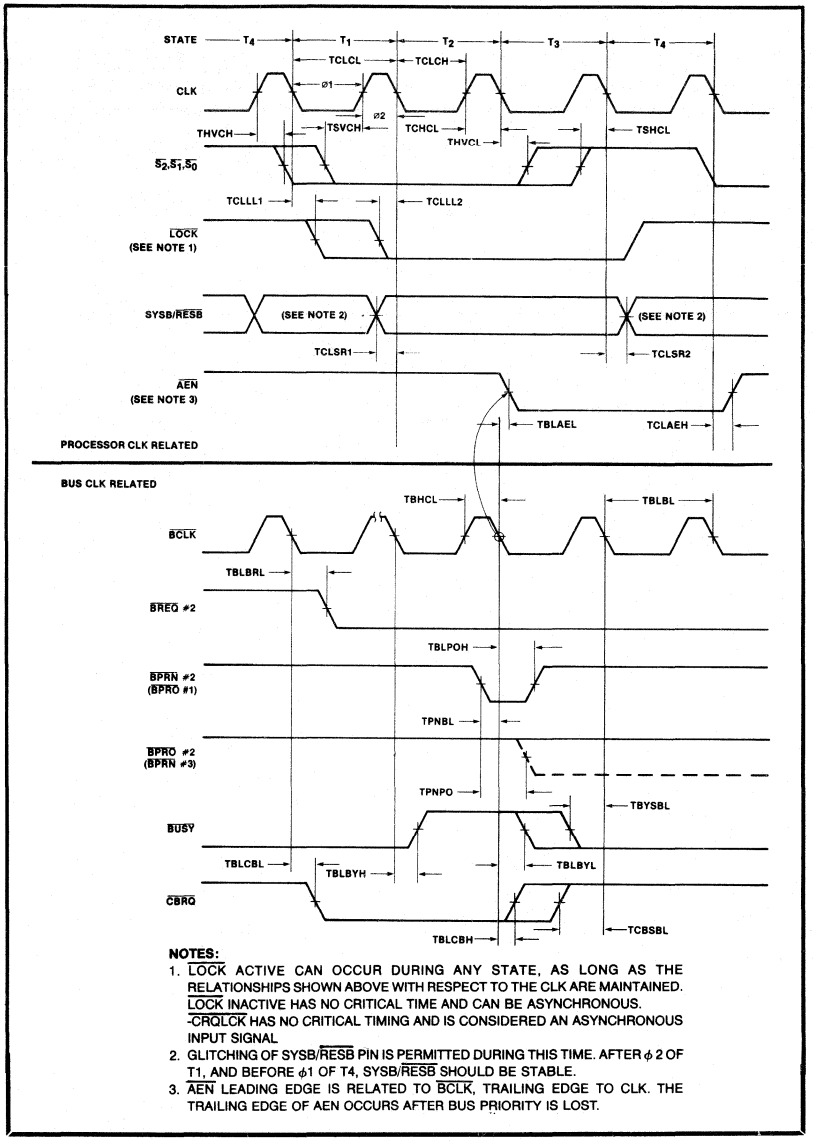

NOTES:

1. LOCK ACTIVE CAN OCCUR DURING ANY STATE, AS LONG AS THE RELATIONSHIPS SHOWN ABOVE WITH RESPECT TO THE CLK ARE MAINTAINED. LOCK INACTIVE HAS NO CRITICAL TIME AND CAN BE ASYNCHRONOUS. -CRQLCK HAS NO CRITICAL TIMING AND IS CONSIDERED AN ASYNCHRONOUS INPUT SIGNAL
2. GLITCHING OF SYSB/RESB PIN IS PERMITTED DURING THIS TIME. AFTER ϕ 2 OF T1, AND BEFORE ϕ1 OF T4, SYSB/RESB SHOULD BE STABLE.
3. AEN LEADING EDGE IS RELATED TO BCLK, TRAILING EDGE TO CLK. THE TRAILING EDGE OF AEN OCCURS AFTER BUS PRIORITY IS LOST.

ADDITIONAL NOTES:

The signals related to CLK are typical processor signals, and do not relate to the depicted sequence of events of the signals referenced to BCLK. The signals shown related to the BCLK represent a hypothetical sequence of events for illustration. Assume 3 bus arbiters of priorities 1, 2 and 3 configured in serial priority resolving scheme as shown in Figure 6. Assume arbiter 1 has the bus and is holding busy low. Arbiter #2 detects its processor wants the bus and pulls low BREQ#2. If BPRN#2 is high (as shown), arbiter #2 will pull low CBRQ line. CBRQ signals to the higher priority arbiter #1 that a lower priority arbiter wants the bus. [A higher priority arbiter would be granted BPRN when it makes the bus request rather than having to wait for another arbiter to release the bus through CBRQ].** Arbiter #1 will relinquish the multi-master system bus when it enters a state not requiring it (see Table 1), by lowering its BPRO#1 (tied to BPRN#2) and releasing BUSY. Arbiter #2 now sees that it has priority from BPRN#2 being low and releases CBRQ. As soon as BUSY signifies the bus is available (high), arbiter #2 pulls BUSY low on next falling edge of BCLK. Note that if arbiter #2 didn't want the bus at the time it received priority, it would pass priority to the next lower priority arbiter by lowering its BPRO #2 [TPNPO].

**Note that even a higher priority arbiter which is acquiring the bus through BPRN will momentarily drop CBRQ until it has acquired the bus.

Microprocessor Peripherals

9

PRELIMINARY

8041AH/8041AH-2/8641A/8741A
UNIVERSAL PERIPHERAL INTERFACE
8-BIT MICROCOMPUTER

- **8041AH-2: 12 MHz**
  8041AH: 8 MHz
- **8-Bit CPU plus ROM, RAM, I/O, Timer and Clock in a Single Package**
- **One 8-Bit Status and Two Data Registers for Asynchronous Slave-to-Master Interface**
- **DMA, Interrupt, or Polled Operation Supported**
- **1024 x 8 ROM/EPROM, 64 x 8 RAM, 8-Bit Timer/Counter, 18 Programmable I/O Pins**
- **Fully Compatible with MCS-48™, MCS-80™, MCS-85™, and iAPX-86,88 Microprocessor Families**
- **Interchangeable ROM and EPROM Versions**
- **Expandable I/O**
- **RAM Power-Down Capability**
- **Over 90 Instructions: 70% Single Byte**
- **Single 5V Supply**

The Intel® 8041AH/8741A is a general-purpose, programmable interface device designed for use with a variety of 8-bit microprocessor systems. It contains a low cost microcomputer with program memory, data memory, 8-bit CPU, I/O ports, timer/counter, and clock in a single 40-pin package. Interface registers are included to enable the UPI device to function as a peripheral controller in MCS-48™, MCS-80™, iAPX-85™, iAPX-86, iAPX-88, and other 8- or 16-bit systems.

The UPI-41A™ has 1K words of program memory and 64 words of data memory on-chip. To allow full user flexibility the program memory is available as ROM in the 8041AH version or as UV-erasable EPROM in the 8741A version. The 8741A and the 8041AH are fully pin compatible for easy transition from prototype to production level designs. The 8741A is a one-time programmable (at the factory) 8741A which can be ordered as the first 25 pieces of a new 8041AH order. The substitution of 8641As for 8041AHs allows for very fast turnaround for initial code verification and evaluation results.

The device has two 8-bit, TTL-compatible I/O ports and two test inputs. Individual port lines can function as either inputs or outputs under software control. I/O can be expanded with the 8243 device which is directly compatible and has 16 I/O lines. An 8-bit programmable timer/counter is included in the UPI device for generating timing sequences or counting external inputs. Additional UPI features include: single 5V supply, low power standby mode (in the 8041AH), single-step mode for debug and dual working register banks.

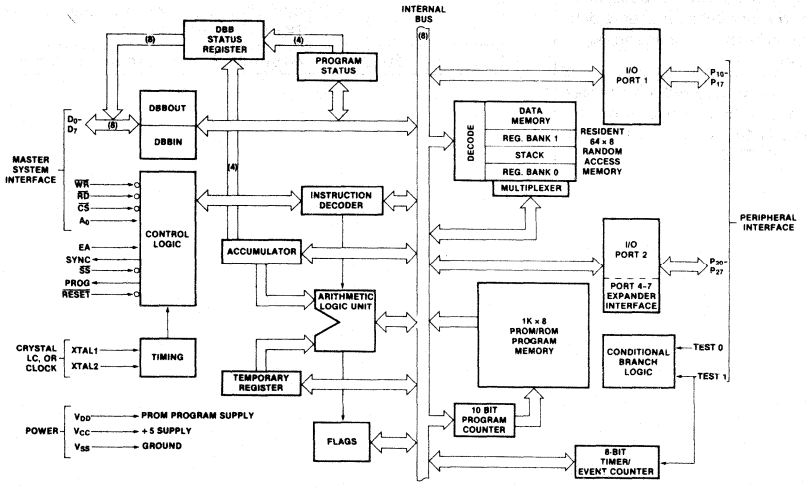

Figure 1. Block Diagram

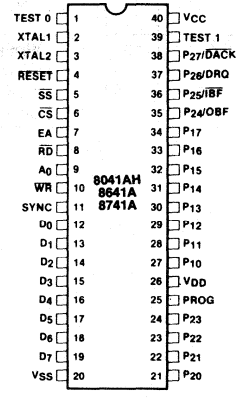

Figure 2. Pin Configuration

Table 1. Pin Description

Symbol	Pin No.	Type	Name and Function
TEST 0, TEST 1	1 39	I	**Test Inputs:** Input pins which can be directly tested using conditional branch instructions. **Frequency Reference:** TEST 1 (T_1) also functions as the event timer input (under software control). TEST 0 (T_0) is used during PROM programming and verification in the 8741A.
XTAL 1, XTAL 2	2 3	I	**Inputs:** Inputs for a crystal, LC or an external timing signal to determine the internal oscillator frequency.
$\overline{RESET}$	4	I	**Reset:** Input used to reset status flip-flops and to set the program counter to zero. $\overline{RESET}$ is also used during PROM programming and verification.
$\overline{SS}$	5	I	**Single Step:** Single step input used in the 8741A in conjunction with the SYNC output to step the program through each instruction.
$\overline{CS}$	6	I	**Chip Select:** Chip select input used to select one UPI-41A microcomputer out of several connected to a common data bus.
EA	7	I	**External Access:** External access input which allows emulation, testing and PROM/ROM verification. This pin should be tied low if unused.
$\overline{RD}$	8	I	**Read:** I/O read input which enables the master CPU to read data and status words from the OUTPUT DATA BUS BUFFER or status register.
A_0	9	I	**Command/Data Select:** Address input used by the master processor to indicate whether byte transfer is data (A_0 = 0, F_1 is reset) or command (A_0 = 1, F_1 is set).
$\overline{WR}$	10	I	**Write:** I/O write input which enables the master CPU to write data and command words to the UPI-41A INPUT DATA BUS BUFFER.

Symbol	Pin No.	Type	Name and Function
SYNC	11	O	**Output Clock:** Output signal which occurs once per UPI-41A instruction cycle. SYNC can be used as a strobe for external circuitry; it is also used to synchronize single step operation.
D_0-D_7 (BUS)	12-19	I/O	**Data Bus:** Three-state, bidirectional DATA BUS BUFFER lines used to interface the UPI-41A microcomputer to an 8-bit master system data bus.
P_{10}-P_{17}	27-34	I/O	**Port 1:** 8-bit, PORT 1 quasi-bidirectional I/O lines.
P_{20}-P_{27}	21-24 35-38	I/O	**Port 2:** 8-bit, PORT 2 quasi-bidirectional I/O lines. The lower 4 bits (P_{20}-P_{23}) interface directly to the 8243 I/O expander device and contain address and data information during PORT 4-7 access. The upper 4 bits (P_{24}-P_{27}) can be programmed to provide interrupt Request and DMA Handshake capability. Software control can configure P_{24} as Output Buffer Full (OBF) interrupt, P_{25} as Input Buffer Full ($\overline{IBF}$) interrupt, P_{26} as DMA Request (DRQ), and P_{27} as DMA ACKnowledge ($\overline{DACK}$).
PROG	25	I/O	**Program:** Multifunction pin used as the program pulse input during PROM programming. During I/O expander access the PROG pin acts as an address/data strobe to the 8243. This pin should be tied high if unused.
V_{CC}	40		**Power:** +5V main power supply pin.
V_{DD}	26		**Power:** +5V during normal operation. +25V during programming operation. Low power standby pin in ROM version.
V_{SS}	20		**Ground:** Circuit ground potential.

UPI-41A™ FEATURES AND ENHANCEMENTS

1. Two Data Bus Buffers, one for input and one for output. This allows a much cleaner Master/Slave protocol.

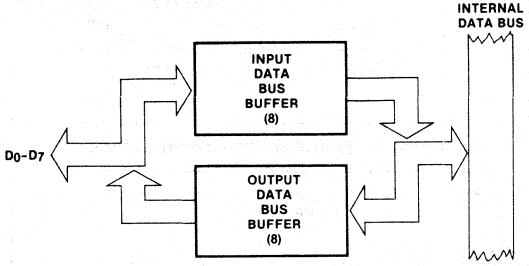

2. 8 Bits of Status

ST_7	ST_6	ST_5	ST_4	F_1	F_0	IBF	OBF
D_7	D_6	D_5	D_4	D_3	D_2	D_1	D_0

ST_4-ST_7 are user definable status bits. These bits are defined by the "MOV STS, A" single byte, single cycle instruction. Bits 4-7 of the accumulator are moved to bits 4-7 of the status register. Bits 0-3 of the status register are not affected.

MOV STS, A Op Code: 90H

1	0	0	1	0	0	0	0
D_7							D_0

3. $\overline{RD}$ and $\overline{WR}$ are edge triggered. IBF, OBF, F_1 and INT change internally after the trailing edge of $\overline{RD}$ or $\overline{WR}$.

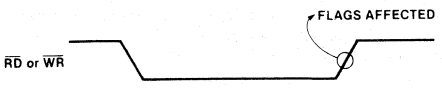

During the time that the host CPU is reading the status register, the 8041AH is prevented from updating this register or is 'locked out.'

4. P_{24} and P_{25} are port pins or Buffer Flag pins which can be used to interrupt a master processor. These pins default to port pins on Reset.

   If the "EN FLAGS" instruction has been executed, P_{24} becomes the OBF (Output Buffer Full) pin. A "1" written to P_{24} enables the OBF pin (the pin outputs the OBF Status Bit). A "0" written to P_{24} disables the OBF pin (the pin remains low). This pin can be used to indicate that valid data is available from the UPI-41A (in Output Data Bus Buffer).

   If "EN FLAGS" has been executed, P_{25} becomes the $\overline{IBF}$ (Input Buffer Full) pin. A "1" written to P_{25} enables the $\overline{IBF}$ pin (the pin outputs the inverse of the IBF Status Bit). A "0" written to P_{25} disables the $\overline{IBF}$ pin (the pin remains low). This pin can be used to indicate that the UPI-41A is ready for data.

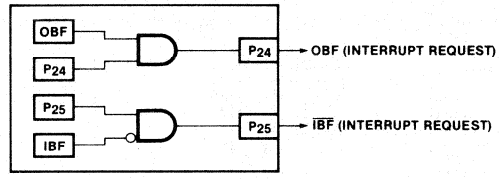

DATA BUS BUFFER INTERRUPT CAPABILITY

EN FLAGS Op Code: 0F5H

1	1	1	1	0	1	0	1
D_7							D_0

5. P_{26} and P_{27} are port pins or DMA handshake pins for use with a DMA controller. These pins default to port pins on Reset.

   If the "EN DMA" instruction has been executed, P_{26} becomes the DRQ (DMA ReQuest) pin. A "1" written to P_{26} causes a DMA request (DRQ is activated). DRQ is deactivated by DACK·RD, DACK·WR, or execution of the "EN DMA" instruction.

   If "EN DMA" has been executed, P_{27} becomes the $\overline{DACK}$ (DMA ACKnowledge) pin. This pin acts as a chip select input for the Data Bus Buffer registers during DMA transfers.

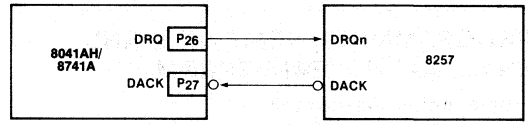

DMA HANDSHAKE CAPABILITY

EN DMA Op Code: 0E5H

1	1	1	0	0	1	0	1
D_1							D_0

8041AH ENHANCEMENTS OVER 8041A

1. The RESET input on the 8041AH was changed to include a 2 stage synchronizer to support reliable reset operation for 12 MHz operation.
2. As noted in the status register description, during the time that the host CPU is reading the status register, the 8041AH is prevented from updating or is 'locked out.'
3. When EA is enabled on the 8041A, the program counter is placed on Port 1 and the lower two bits of Port 2. On the 8041AH, this information is multiplexed with PORT DATA (see port timing diagrams at end of this data sheet).
4. The 8041AH additionally supports single step mode as described in the pin description section.

APPLICATIONS

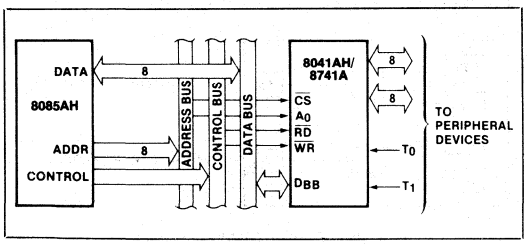

Figure 3. 8085AH-8041AH Interface

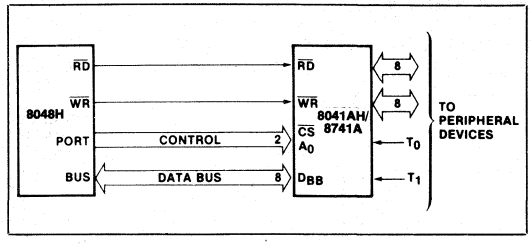

Figure 4. 8048AH-8041AH Interface

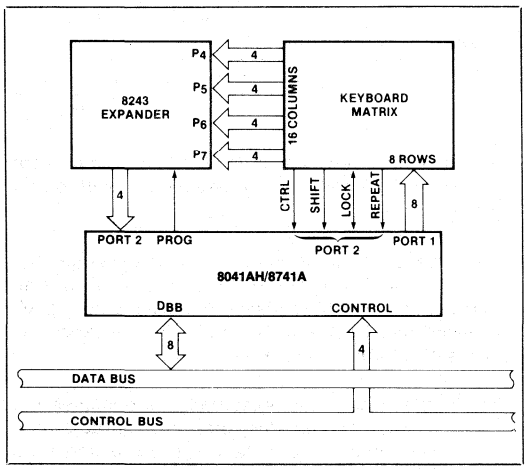

Figure 5. 8041AH-8243 Keyboard Scanner

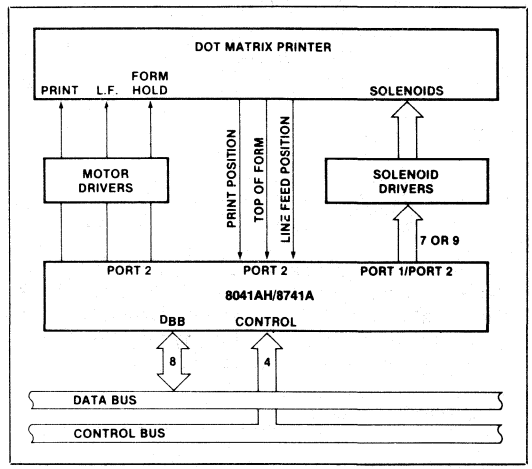

Figure 6. 8041AH Matrix Printer Interface

PROGRAMMING, VERIFYING, AND ERASING THE 8741A EPROM

Programming Verification

In brief, the programming process consists of: activating the program mode, applying an address, latching the address, applying data, and applying a programming pulse. Each word is programmed completely before moving on to the next and is followed by a verification step. The following is a list of the pins used for programming and a description of their functions:

Pin	Function
XTAL 1	Clock Input (1 to 6MHz)
$\overline{\text{Reset}}$	Initialization and Address Latching
Test 0	Selection of Program or Verify Mode
EA	Activation of Program/Verify Modes
BUS	Address and Data Input Data Output During Verify
P20-1	Address Input
V_{DD}	Programming Power Supply
PROG	Program Pulse Input

WARNING:

An attempt to program a missocketed 8741A will result in severe damage to the part. An indication of a properly socketed part is the appearance of the SYNC clock output. The lack of this clock may be used to disable the programmer.

The Program/Verify sequence is:

1. A_0 = 0V, $\overline{CS}$ = 5V, EA = 5V, $\overline{RESET}$ = 0V, TEST0 = 5V, V_{DD} = 5V, clock applied or internal oscillator operating, BUS and PROG floating.
2. Insert 8741A in programming socket
3. TEST 0 = 0v (select program mode)
4. EA = 23V (activate program model)[1]
5. Address applied to BUS and P20-1
6. $\overline{RESET}$ = 5v (latch address)
7. Data applied to BUS[2]
8. V_{DD} = 25v (programming power)[2]
9. PROG = 0v followered by one 50ms pulse to 23V[2]
10. V_{DD} = 5v
11. TEST 0 = 5v (verify mode)

12. Read and verify data on BUS
13. TEST 0 = 0v
14. $\overline{\text{RESET}}$ = 0v and repeat from step 5
15. Programmer should be at conditions of step 1 when 8741A is removed from socket.

NOTE:
1. When verifying ROM, EA = 12V.
2. Not used in verify ROM procedure.

8741A Erasure Characteristics

The erasure characteristics of the 8741A are such that erasure begins to occur when exposed to light with wavelengths shorter than approximately 4000 Angstroms (Å). It should be noted that sunlight and certain types of fluorescent lamps have wavelengths in the 3000–4000Å range. Data show that constant exposure to room level fluorescent lighting could erase the typical 8741A in approximately 3 years while it would take approximately one week to cause erasure when exposed to direct sunlight. If the 8741A is to be exposed to these types of lighting conditions for extended periods of time, opaque labels are available from Intel which should be placed over the 8741A window to prevent unintentional erasure.

The recommended erasure procedure for the 8741A is exposure to shortwave ultraviolet light which has a wavelength of 2537Å. The integrated dose (i.e., UV intensity × exposure time) for erasure should be a minimum of 15 w-sec/cm^2. The erasure time with this dosage is approximately 15 to 20 minutes using an ultraviolet lamp with a 12,000 μW/cm^2 power rating. The 8741A should be placed within one inch of the lamp tubes during erasure. Some lamps have a filter on their tubes which should be removed before erasure.

ABSOLUTE MAXIMUM RATINGS*

Ambient Temperature Under Bias . . . . . 0°C to 70°C
Storage Temperature . . . . . −65°C to +150°C
Voltage on Any Pin With Respect to Ground . . . . . −0.5V to +7V
Power Dissipation . . . . . 1.5 Watt

**NOTICE: Stresses above those listed under "Absolute Maximum Ratings" may cause permanent damage to the device. This is a stress rating only and functional operation of the device at these or any other conditions above those indicated in the operational sections of this specification is not implied. Exposure to absolute maximum rating conditions for extended periods may affect device reliability.*

D.C. CHARACTERISTICS (T_A = 0° to +70°C, V_{CC} = V_{DD} = +5V ± 10%)

Symbol	Parameter	8041AH/ 8041AH-2		8641A/8741A		Units	Test Conditions
		Min.	Max.	Min.	Max.		
V_{IL}	Input Low Voltage (Except XTAL1, XTAL2, $\overline{RESET}$	−0.5	0.8	−0.5	0.8	V	
V_{IL1}	Input Low Voltage (8XTAL1, XTAL2, $\overline{RESET}$)	−0.5	0.6	−0.5	0.6	V	
V_{IH}	Input High Voltage (Except XTAL1, XTAL2, $\overline{RESET}$	2.0	V_{CC}	2.0	V_{CC}		
V_{IH1}	Input High Voltage (XTAL1, XTAL2, $\overline{RESET}$)	3.8	V_{CC}	3.8	V_{CC}	V	
V_{OL}	Output Low Voltage (D_0-D_7)		0.45		0.45	V	I_{OL} = 2.0 mA
V_{OL1}	Output Low Voltage ($P_{10}P_{17}$, $P_{20}P_{27}$, Sync)		0.45		0.45	V	I_{OL} = 1.6 mA
V_{OL2}	Output Low Voltage (Prog)		0.45		0.45	V	I_{OL} = 1.0 mA
V_{OH}	Output High Voltage (D_0-D_7)	2.4		2.4		V	I_{OH} = −400 μA
V_{OH1}	Output High Voltage (All Other Outputs)	2.4		2.4		V	I_{OH} = −50 μA
I_{IL}	Input Leakage Current (T_0, T_1, $\overline{RD}$, $\overline{WR}$, $\overline{CS}$, A_0, EA)		±10		±10	μA	$V_{SS} \leq V_{IN} \geq V_{CC}$
I_{OFL}	Output Leakage Current (D_0-D_7, High Z State)		±10		±10	μA	V_{SS} + 0.45 $\leq V_{OUT} \leq V_{CC}$
I_{LI}	Low Input Load Current ($P_{10}P_{17}$, $P_{20}P_{27}$)		0.5		0.5	mA	V_{IL} = 0.8 V
I_{LI1}	Low Input Load Current ($\overline{RESET}$, $\overline{SS}$)		0.2		0.2	mA	V_{IL} = 0.8 V
I_{DD}	V_{DD} Supply Current		15		15	mA	Typical = 5 mA
I_{CC} + I_{DD}	Total Supply Current		125		125	mA	Typical = 60 mA
I_{IH}	Input Leakage Current		100		100	NA	V_{IN} = V_{CC}
C_{IN}	Input Capacitance		10		10	pF	
$C_{I/O}$	I/O Capacitance		20		20	pF	

D.C. CHARACTERISTICS—PROGRAMMING (T_A = 25°C ±5°C, V_{CC} = 5V ±5%, V_{DD} = 25V ±1V)

Symbol	Parameter	Min.	Max.	Unit	Test Conditions
V_{DOH}	V_{DD} Program Voltage High Level	24.0	26.0	V	
V_{DDL}	V_{DD} Voltage Low Level	4.75	5.25	V	
V_{PH}	PROG Program Voltage High Level	21.5	24.5	V	
V_{PL}	PROG Voltage Low Level		0.2	V	
V_{EAH}	EA Program or Verify Voltage High Level	21.5	24.5	V	
V_{EAL}	EA Voltage Low Level		5.25	V	
I_{DD}	V_{DD} High Voltage Supply Current		30.0	mA	
I_{PROG}	PROG High Voltage Supply Current		16.0	mA	
I_{EA}	EA High Voltage Supply Current		1.0	mA	

A.C. CHARACTERISTICS (T_{CC} = 0°C to +70°C, V_{SS} = 0V, V_{CC} = V_{DD} = +5V ±10%)

DBB READ

Symbol	Parameter	8041AH		8041AH-2		8641A/8741A		Units
		Min.	Max.	Min.	Max.	Min.	Max.	
t_{AR}	$\overline{CS}$, A_0 Setup to $\overline{RD}\downarrow$	0		0		0		ns
t_{RA}	$\overline{CS}$, A_0 Hold After $\overline{RD}\uparrow$	0		0		0		ns
t_{RR}	$\overline{RD}$ Pulse Width	160		160		250		ns
t_{AD}	$\overline{CS}$, A_0 to Data Out Delay		130		130		225	ns[1]
t_{RD}	$\overline{RD}\downarrow$ to Data Out Delay		130		130		225	ns[1]
t_{DF}	$\overline{RD}\uparrow$ to Data Float Delay		85		85		100	ns
t_{CY}	Cycle Time (Except 8741A-8)	2	15	1.25	15	2.5	15	μs[2]
t_{CY}	Cycle Time (8741A-8)					4.17	15	μs[3]

DBB WRITE

Symbol	Parameter	Min.	Max.	Min.	Max.	Min.	Max.	Units
t_{AW}	$\overline{CS}$, A_0 Setup to $\overline{WR}\downarrow$	0		0		0		ns
t_{WA}	$\overline{CS}$, A_0 Hold After $\overline{WR}\uparrow$	0		0		0		ns
t_{WW}	$\overline{WR}$ Pulse Width	160		160		250		ns
t_{DW}	Data Setup to $\overline{WR}\uparrow$	130		130		150		ns
t_{WD}	Data Hold After $\overline{WR}\uparrow$	0		0		0		ns

NOTES:
1. C_L = 150 pF.
2. 8, 12, 6 MHz XTAL respectively.
3. 3.6 MHz XTAL.

A.C. CHARACTERISTICS—PROGRAMMING (T_A = 25°C ±5°C, V_{CC} = 5V ± 5%, V_{DD} = 25V ±1V)

Symbol	Parameter	Min.	Max.	Unit	Test Conditions
t_{AW}	Address Setup Time to $\overline{RESET}$ ↑	4tcy			
t_{WA}	Address Hold Time After $\overline{RESET}$ ↑	4tcy			
t_{DW}	Data in Setup Time to PROG ↑	4tcy			
t_{WD}	Data in Hold Time After PROG ↓	4tcy			
t_{PH}	$\overline{RESET}$ Hold Time to Verify	4tcy			
t_{VDDW}	V_{DD} Setup Time to PROG ↑	4tcy			
t_{VDDH}	V_{DD} Hold Time After PROG ↓	0			
t_{PW}	Program Pulse Width	50	60	mS	
t_{TW}	Test 0 Setup Time for Program Mode	4tcy			
t_{WT}	Test 0 Hold Time After Program Mode	4tcy			
t_{DO}	Test 0 to Data Out Delay		4tcy		
t_{WW}	$\overline{RESET}$ Pulse Width to Latch Address	4tcy			
t_r, t_f	V_{DD} and PROG Rise and Fall Times	0.5	2.0	μs	
t_{CY}	CPU Operation Cycle Time	5.0		μs	
t_{RE}	$\overline{RESET}$ Setup Time Before EA ↑.	4tcy			

Note: If TEST 0 is high, t_{DO} can be triggered by $\overline{RESET}$ ↑.

A.C. CHARACTERISTICS
DMA

Symbol	Parameter	8041AH		8041AH-2		8641A/8741A		Units
		Min.	Max.	Min.	Max.	Min.	Max.	
t_{ACC}	$\overline{DACK}$ to $\overline{WR}$ or $\overline{RD}$	0		0		0		ns
t_{CAC}	$\overline{RD}$ or $\overline{WR}$ to $\overline{DACK}$	0		0		0		ns
t_{ACD}	$\overline{DACK}$ to Data Valid		130		130		225	ns
t_{CRQ}	$\overline{RD}$ or $\overline{WR}$ to DRQ Cleared		90		90		200	ns[1]

A.C. CHARACTERISTICS
PORT 2

(T_A = 0°C to +70°C, V_{CC} = +5V ±10%)

Symbol	Parameter	8041AH		8041AH-2		8641A/8741A		Units
		Min.	Max.	Min.	Max.	Min.	Max.	
t_{CP}	Port Control Setup Before Falling Edge of PROG	100		80		110		ns[1]
t_{PC}	Port Control Hold After Falling Edge of PROG			60		100		ns[2]
t_{PR}	PROG to Time P2 Input Must Be Valid		650		650		810	ns[1]
t_{PF}	Input Data Hold Time	0	150	0	150	0	150	ns[2]
t_{DP}	Output Data Setup time			200		250		ns[1]
t_{PD}	Output Data Hold Time					65		ns[2]
t_{PP}	PROG Pulse Width			700		1200		ns

NOTES: 1. C_L = 80 pF. 2. C_L = 20 pF.

A.C. TESTING INPUT, OUTPUT WAVEFORM

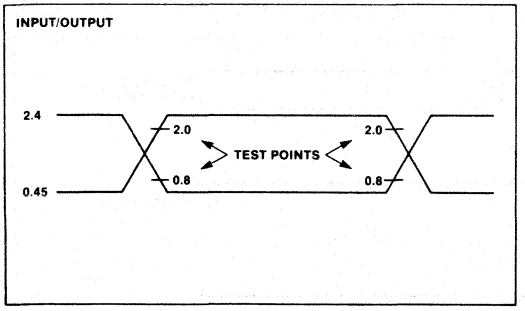

A.C. TESTING LOAD CIRCUIT

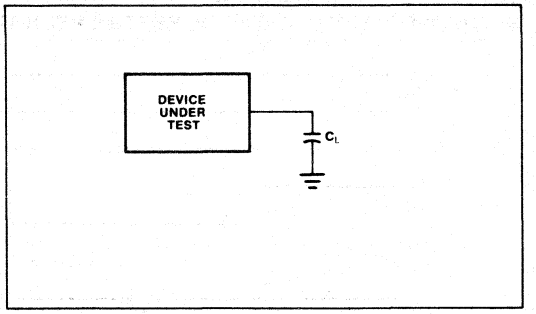

CRYSTAL OSCILLATOR MODE

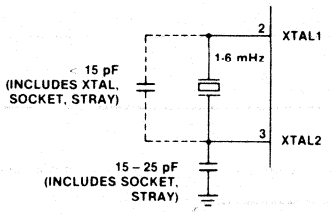

CRYSTAL SERIES RESISTANCE SHOULD BE <75Ω AT 6 MHz; <180Ω AT 3.6 MHz.

DRIVING FROM EXTERNAL SOURCE

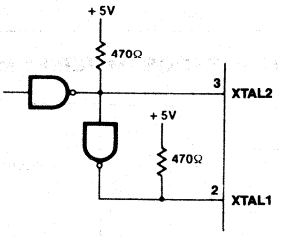

BOTH XTAL1 AND XTAL2 SHOULD BE DRIVEN. RESISTORS TO V_{CC} ARE NEEDED TO ENSURE $V_{IH} = 3.8V$ IF TTL CIRCUITRY IS USED.

LC OSCILLATOR MODE

L	C	NOMINAL f
45 μH	20 pF	5.2 MHz
120 μH	20 pF	3.2 MHz

$$f \approx \frac{1}{2\pi\sqrt{LC'}}$$

$$C' = \frac{C + 3C_{PP}}{2}$$

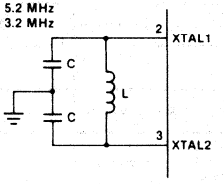

$C_{PP} \approx 5 – 10$ pF PIN-TO-PIN CAPACITANCE

EACH C SHOULD BE APPROXIMATELY 20 pF, INCLUDING STRAY CAPACITANCE.

WAVEFORMS

READ OPERATION—DATA BUS BUFFER REGISTER

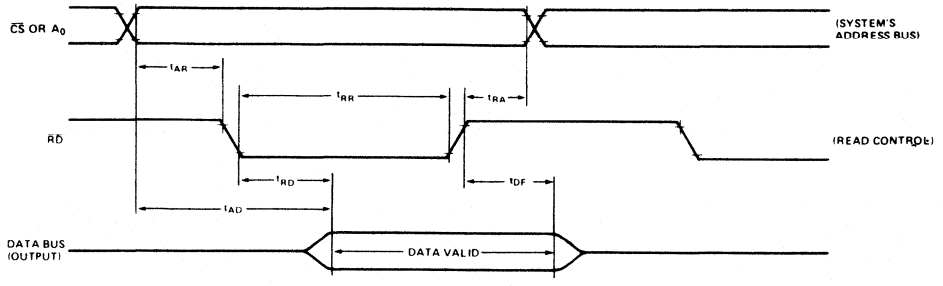

WAVEFORMS (Continued)

WRITE OPERATION—DATA BUS BUFFER REGISTER

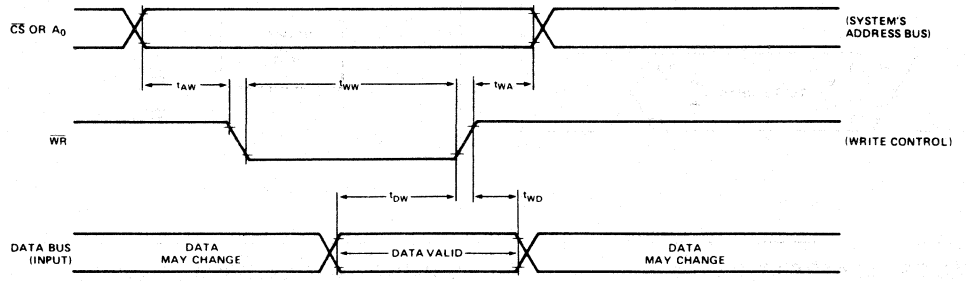

COMBINATION PROGRAM/VERIFY MODE (EPROM'S ONLY)

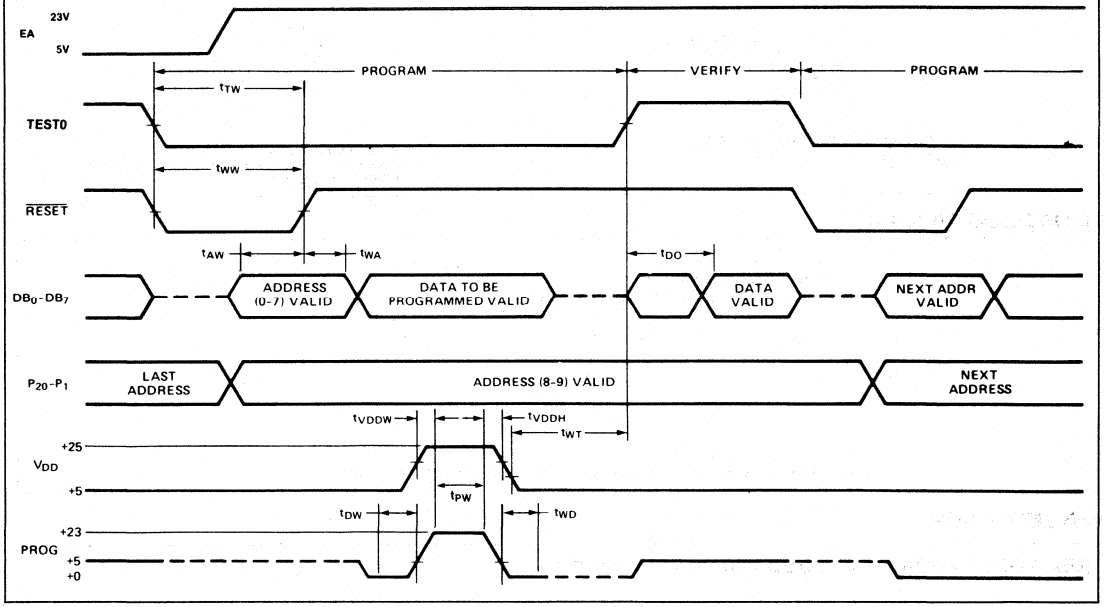

WAVEFORMS (Continued)

VERIFY MODE (ROM/EPROM)

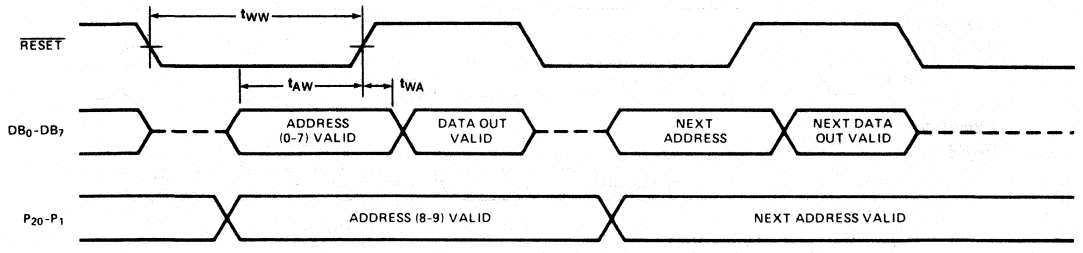

NOTES:
1. PROG MUST FLOAT IF EA IS LOW (i.e., = 23V), OR IF TO =5V FOR THE 8741A. FOR THE 8041AH PROG MUST ALWAYS FLOAT.
2. XTAL1 and XTAL2 DRIVEN BY 3.6 MHz CLOCK WILL GIVE 4.17 μsec t_{CY}. THIS IS ACCEPTABLE FOR 8741A-8 PARTS AS WELL AS STANDARD PARTS.
3. A0 MUST BE HELD LOW (i.e., = 0V) DURING PROGRAM/VERIFY MODES.
4. TEST 0 MUST BE HELD HIGH.

The 8741A EPROM can be programmed by either of two Intel products:

1. PROMPT-48 Microcomputer Design Aid, or
2. Universal PROM Programmer (UPP series) peripheral of the Intellec® Development System with a UPP-848 Personality Card.

DMA

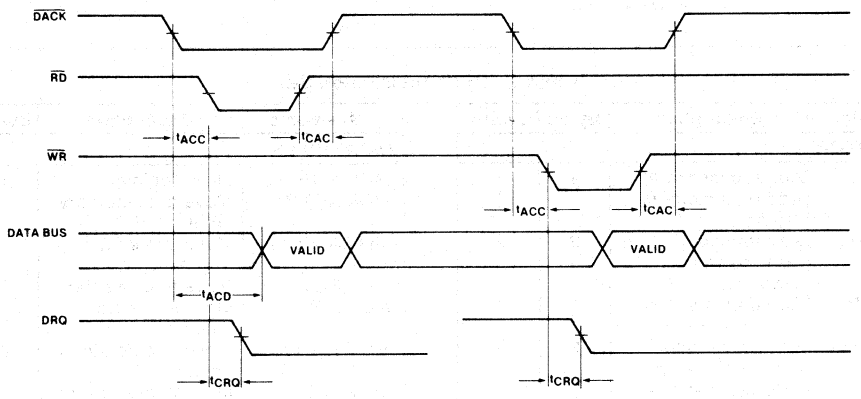

WAVEFORMS (Continued)

PORT 2

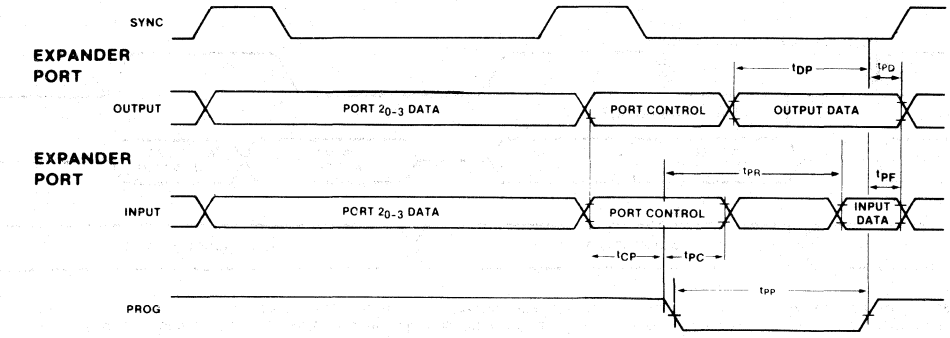

PORT TIMING DURING EA

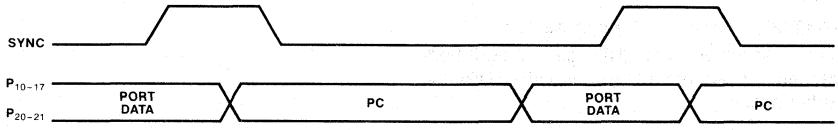

ON THE RISING EDGE OF SYNC AND EA IS ENABLED, PORT DATA IS VALID AND CAN BE STROBED. ON THE TRAILING EDGE OF SYNC THE PROGRAM COUNTER CONTENTS ARE AVAILABLE.

Table 2. UPI™ Instruction Set

Mnemonic	Description	Bytes	Cycles
ACCUMULATOR			
ADD A, Rr	Add register to A	1	1
ADD A, @Rr	Add data memory to A	1	1
ADD A, #data	Add immediate to A	2	2
ADDC A, Rr	Add register to A with carry	1	1
ADDC A, @Rr	Add data memory to A with carry	1	1
ADDC A, #data	Add immediate to A with carry	2	2
ANL A, Rr	AND register to A	1	1
ANL A, @Rr	AND data memory to A	1	1
ANL A, #data	AND immediate to A	2	2
ORL A, Rr	OR register to A	1	1
ORL A, @Rr	OR data memory to A	1	1
ORL A, #data	OR immediate to A	2	2
XRL A, Rr	Exclusive OR register to A	1	1
XRL A, @Rr	Exclusive OR data memory to A	1	1
XRL A, #data	Exclusive OR immediate to A	2	2

Mnemonic	Description	Bytes	Cycles
DATA MOVES			
MOV A, Rr	Move register to A	1	1
MOV A, @Rr	Move data memory to A	1	1
MOV A, #data	Move immediate TO A	2	2
MOV Rr, A	Move A to register	1	1
MOV @Rr, A	Move A to data memory	1	1
MOV Rr, #data	Move immediate to register	2	2
MOV @Rr, #data	Move immediate to data memory	2	2
MOV A, PSW	Move PSW to A	1	1
MOV PSW, A	Move A to PSW	1	1
XCH A, Rr	Exchange A and register	1	1
XCH A, @Rr	Exchange A and data memory	1	1
XCHD A, @Rr	Exchange digit of A and register	1	1
MOVP A, @A	Move to A from current page	1	2
MOVP3, A, @A	Move to A from page 3	1	2

Table 2. UPI™ Instruction Set (Continued)

Mnemonic	Description	Bytes	Cycles
ACCUMULATOR			
INC A	Increment A	1	1
DEC A	Decrement A	1	1
CLR A	Clear A	1	1
CPL A	Complement A	1	1
DA A	Decimal Adjust A	1	1
SWAP A	Swap nibbles of A	1	1
RL A	Rotate A left	1	1
RLC A	Rotate A left through carry	1	1
RR A	Rotate A right	1	1
RRC A	Rotate A right through carry	1	1
INPUT/OUTPUT			
IN A, Pp	Input port toA	1	2
OUTL Pp, A	Output A to port	1	2
ANL Pp, #data	AND immediate to port	2	2
ORL Pp, #data	OR immediate to port	2	2
IN A, DBB	Input DBB to A, clear IBF	1	1
OUT DBB, A	Output A to DBB, set OBF	1	1
MOV STS, A	A_4–A_7 to Bits 4–7 of Status	1	1
MOVD A, Pp	Input Expander port to A	1	2
MOVD Pp, A	Output A to Expander port	1	2
ANLD Pp, A	AND A to Expander port	1	2
ORLD Pp, A	OR A to Expander port	1	2
TIMER/COUNTER			
MOV A, T	Read Timer/Counter	1	1
MOV T, A	Load Timer/Counter	1	1
STRT T	Start Timer	1	1
STRT CNT	start Counter	1	1
STOP TCNT	Stop Timer/Counter	1	1
EN TCNTI	Enable Timer/ Counter Interrupt	1	1
DIS TCNTI	Disable Timer/ Counter Interrupt	1	1
CONTROL			
EN DMA	Enable DMA Handshake Lines	1	1
EN I	Enable IBF Interrupt	1	1
DIS I	Disable IBF Interrupt	1	1
EN FLAGS	Enable Master Interrupts	1	1
SEL RB0	Select register bank 0	1	1
SEL RB1	Select register bank 1	1	1
NOP	No Operation	1	1

Mnemonic	Description	Bytes	Cycles
REGISTERS			
INC Rr	Increment register	1	1
INC @Rr	Increment data memory	1	1
DEC Rr	Decrement register	1	1
SUBROUTINE			
CALL addr	Jump to subroutine	2	2
RET	Return	1	2
RETR	Return and restore status	1	2
FLAGS			
CLR C	Clear Carry	1	1
CPL C	Complement Carry	1	1
CLR F0	Clear Flag 0	1	1
CPL F0	Complement Flag 0	1	1
CLR F1	Clear F1 Flag	1	1
CPL F1	Complement F1 Flag	1	1
BRANCH			
JMP addr	Jump unconditional	2	2
JMPP @A	Jump indirect	1	2
DJNZ Rr, addr	Decrement register and jump	2	2
JC addr	Jump on Carry=1	2	2
JNC addr	Jump on Carry=0	2	2
JZ addr	Jump on A Zero	2	2
JNZ addr	Jump on A not Zero	2	2
JT0 addr	Jump on T0=1	2	2
JNT0 addr	Jump on T0=0	2	2
JT1 addr	Jump on T1=1	2	2
JNT1 addr	Jump on T1=0	2	2
JF0 addr	Jump on F0 Flag=1	2	2
JF1 addr	Jump on F1 Flag=1	2	2
JTF addr	Jump on Timer Flag =1, Clear Flag	2	2
JNIBF addr	Jump on IBF Flag =0	2	2
JOBF addr	Jump on OBF Flag =1	2	2
JBb addr	Jump on Accumulator Bit	2	2

PRELIMINARY

8042/8742
UNIVERSAL PERIPHERAL INTERFACE 8-BIT MICROCOMPUTER

- **8042/8742: 12 MHz**
- **Pin, Software and Architecturally Compatible with 8041A/8741A/8041AH**
- **8-Bit CPU plus ROM, RAM, I/O, Timer and Clock in a Single Package**
- **2048 x 8 ROM/EPROM, 128 x 8 RAM, 8-Bit Timer/Counter, 18 Programmable I/O Pins**
- **One 8-Bit Status and Two Data Registers for Asynchronous Slave-to-Master Interface**
- **DMA, Interrupt, or Polled Operation Supported**
- **Fully Compatible with MCS-48™, MCS-51™, MCS-80™, MCS-85™, and iAPX-86, 88 Microprocessor Families**
- **Interchangeable ROM and EPROM Versions**
- **Expandable I/O**
- **RAM Power-Down Capability**
- **Over 90 Instructions: 70% Single Byte**
- **Single 5V Supply**

The Intel 8042/8742 is a general-purpose Universal Peripheral Interface that allows the designer to grow his own customized solution for peripheral device control. It contains a low-cost microcomputer with 2K of program memory, 128 bytes of data memory, 8-bit CPU, I/O ports, 8-bit timer/counter, and clock generator in a single 40-pin package. Interface registers are included to enable the UPI device to function as a peripheral controller in the MCS-48™, MCS-51™, MCS-80™, MCS-85™, iAPX-88, iAPX-86 and other 8-, 16-bit systems.

The 8042/8742 is software, pin, and architecturally compatible with the 8041AH, 8741A. The 8042/8742 doubles the on-chip memory space to allow for additional features and performance to be incorporated in upgraded 8041AH/8741A designs. For new designs, the additional memory and performance of the 8042/8742 extends the UPI concept to more complex motor control tasks, 80-column printers and process control applications as examples.

To allow full user flexibility, the program memory is available as ROM in the 8042 version or as UV-erasable EPROM in the 8742 version. The 8742 and the 8042 are fully pin compatible for easy transition from prototype to production level designs. The 8642 is a one-time programmable (at the factory) 8742 which can be ordered as the first 25 pieces of a new 8042 order. The substitution of 8642's for 8042's allows for very fast turnaround for initial code verification and evaluation results.

The device has two 8-bit, TTL compatible I/O ports and two test inputs. Individual port lines can function as either inputs or outputs under software control. I/O can be expanded with the 8243 device which is directly compatible and has 16 I/O lines. An 8-bit programmable timer/counter is included in the UPI device for generating timing sequences or counting external inputs. Additional UPI features include: single 5V supply, low power standby mode (in the 8042), single-step mode for debug, and dual working register banks.

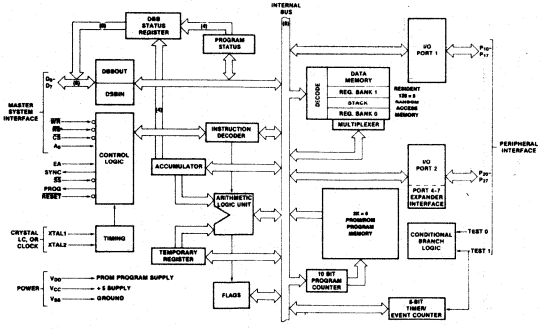

Figure 1. Block Diagram

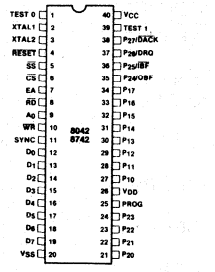

Figure 2. Pin Configuration

The following are trademarks of Intel Corporation and its affiliates and may be used only to identify Intel products: i, Intel, INTEL, INTELLEC, MCS, Im, iCS, ICE, UPI, BXP, iSBC, iSBX, Insite, iRMX, System 2000, CREDIT, iRMX/80, MULTIBUS, PROMPT, Promware, Megachassis, Library Manager, MAIN MULTIMODULE, and the combination of MCS, ICE, iSBC, iRMX or iCS and a numerical suffix. © INTEL CORPORATION, 1981.

order number:210235-001

Table 1. Pin Description

Symbol	Pin No.	Type	Name and Function
TEST 0, TEST 1	1 39	I	**Test Inputs:** Input pins which can be directly tested using conditional branch instructions. **Frequency Reference:** TEST 1 (T_1) also functions as the event timer input (under software control). TEST 0 (T_0) is used during PROM programming and verification in the 8742.
XTAL 1, XTAL 2	2 3	I	**Inputs:** Inputs for a crystal, LC or an external timing signal to determine the internal oscillator frequency.
$\overline{\text{RESET}}$	4	I	**Reset:** Input used to reset status flip-flops and to set the program counter to zero. $\overline{\text{RESET}}$ is also used during PROM programming and verification.
$\overline{\text{SS}}$	5	I	**Single Step:** Single step input used in conjunction with the SYNC output to step the program through each instruction.
$\overline{\text{CS}}$	6	I	**Chip Select:** Chip select input used to select one UPI microcomputer out of several connected to a common data bus.
EA	7	I	**External Access:** External access input which allows emulation, testing and PROM/ROM verification. This pin should be tied low if unused.
$\overline{\text{RD}}$	8	I	**Read:** I/O read input which enables the master CPU to read data and status words from the OUTPUT DATA BUS BUFFER or status register.
A_0	9	I	**Command/Data Select:** Address input used by the master processor to indicate whether byte transfer is data ($A_0 = 0$, F1 is reset) or command ($A_0 = 1$, F1 is set).
$\overline{\text{WR}}$	10	I	**Write:** I/O write input which enables the master CPU to write data and command words to the UPI INPUT DATA BUS BUFFER.

Symbol	Pin No.	Type	Name and Function
SYNC	11	O	**Output Clock:** Output signal which occurs once per UPI-42 instruction cycle. SYNC can be used as a strobe for external circuitry; it is also used to synchronize single step operation.
D_0-D_7 (BUS)	12-19	I/O	**Data Bus:** Three-state, bidirectional DATA BUS BUFFER lines used to interface the UPI-42 microcomputer to an 8-bit master system data bus.
P_{10}-P_{17}	27-34	I/O	**Port 1:** 8-bit, PORT 1 quasi-bidirectional I/O lines.
P_{20}-P_{27}	21-24 35-38	I/O	**Port 2:** 8-bit, PORT 2 quasi-bidirectional I/O lines. The lower 4 bits (P_{20}-P_{23}) interface directly to the 8243 I/O expander device and contain address and data information during PORT 4-7 access. The upper 4 bits (P_{24}-P_{27}) can be programmed to provide interrupt Request and DMA Handshake capability. Software control can configure P_{24} as Output Buffer Full (OBF) interrupt, P_{25} as Input Buffer Full ($\overline{\text{IBF}}$) interrupt, P_{26} as DMA Request (DRQ), and P_{27} as DMA ACKnowledge ($\overline{\text{DACK}}$).
PROG	25	I/O	**Program:** Multifunction pin used as the program pulse input during PROM programming. During I/O expander access the PROG pin acts as an address/data strobe to the 8243. This pin should be tied high if unused.
V_{CC}	40		**Power:** +5V main power supply pin.
V_{DD}	26		**Power:** +5V during normal operation. +21V during programming operation. Low power standby pin in ROM version.
V_{SS}	20		**Ground:** Circuit ground potential.

UPI-42 FEATURES

1. Two Data Bus Buffers, one for input and one for output. This allows a much cleaner Master/Slave protocol.

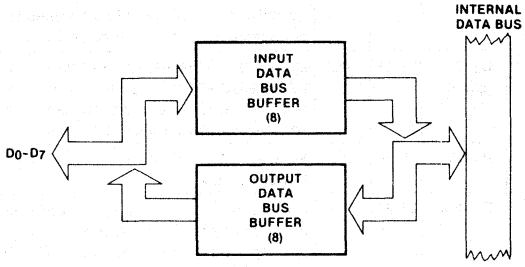

2. 8 Bits of Status

ST_7	ST_6	ST_5	ST_4	F_1	F_0	IBF	OBF
D_7	D_6	D_5	D_4	D_3	D_2	D_1	D_0

ST_4-ST_7 are user definable status bits. These bits are defined by the "MOV STS, A" single byte, single cycle instruction. Bits 4-7 of the accumulator are moved to bits 4-7 of the status register. Bits 0-3 of the status register are not affected.

MOV STS, A Op Code: 90H

1	0	0	1	0	0	0	0
D_7							D_0

3. $\overline{RD}$ and $\overline{WR}$ are edge triggered. IBF, OBF, F_1 and INT change internally after the trailing edge of $\overline{RD}$ or $\overline{WR}$.

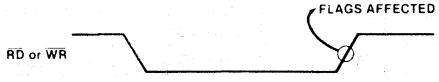

During the time that the host CPU is reading the status register, the 8042/8742 is prevented from updating this register or is 'locked out.'

4. P_{24} and P_{25} are port pins or Buffer Flag pins which can be used to interrupt a master processor. These pins default to port pins on Reset.

   If the "EN FLAGS" instruction has been executed, P_{24} becomes the OBF (Output Buffer Full) pin. A "1" written to P_{24} enables the OBF pin (the pin outputs the OBF Status Bit). A "0" written to P_{24} disables the OBF pin (the pin remains low). This pin can be used to indicate that valid data is available from the UPI-41A (in Output Data Bus Buffer).

   If "EN FLAGS" has been executed, P_{25} becomes the $\overline{IBF}$ (Input Buffer Full) pin. A "1" written to P_{25} enables the $\overline{IBF}$ pin (the pin outputs the inverse of the IBF Status Bit). A "0" written to P_{25} disables the $\overline{IBF}$ pin (the pin remains low). This pin can be used to indicate that the UPI-42 is ready for data.

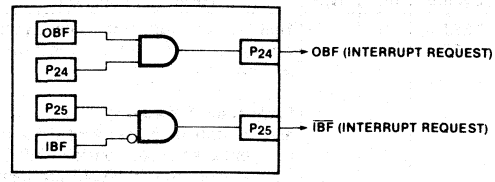

DATA BUS BUFFER INTERRUPT CAPABILITY

EN FLAGS Op Code: 0F5H

1	1	1	1	0	1	0	1
D_7							D_0

5. P_{26} and P_{27} are port pins or DMA handshake pins for use with a DMA controller. These pins default to port pins on Reset.

   If the "EN DMA" instruction has been executed, P_{26} becomes the DRQ (DMA ReQuest) pin. A "1" written to P_{26} causes a DMA request (DRQ is activated). DRQ is deactivated by DACK·RD, DACK·WR, or execution of the "EN DMA" instruction.

   If "EN DMA" has been executed, P_{27} becomes the $\overline{DACK}$ (DMA ACKnowledge) pin. This pin acts as a chip select input for the Data Bus Buffer registers during DMA transfers.

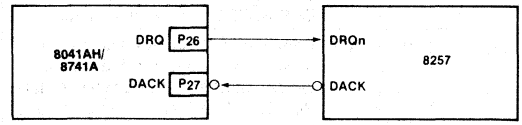

DMA HANDSHAKE CAPABILITY

EN DMA Op Code: 0E5H

1	1	1	0	0	1	0	1
D_1							D_0

6. The RESET input on the 8042/8742 includes a 2-stage synchronizer to support reliable reset operation for 12 MHz operation.

7. When EA is enabled on the 8042/8742, the program counter is placed on Port 1 and the lower three bits of Port 2 (MSB = P_{22}, LSB = P_{10}). On the 8042/8742 this information is multiplexed with PORT DATA (see port timing diagrams at end of this data sheet).

8. The 8042/8742 supports single step mode as described in the pin description section.

APPLICATIONS

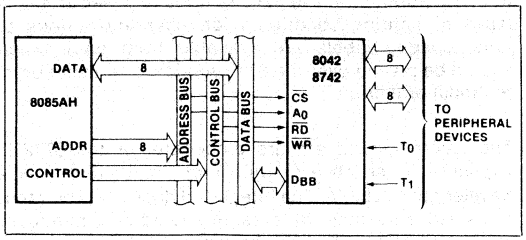

Figure 3. 8085AH-8042/8742 Interface

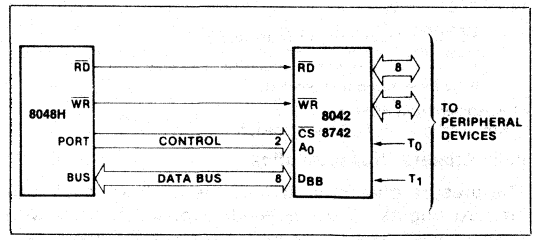

Figure 4. 8048H-8042/8742 Interface

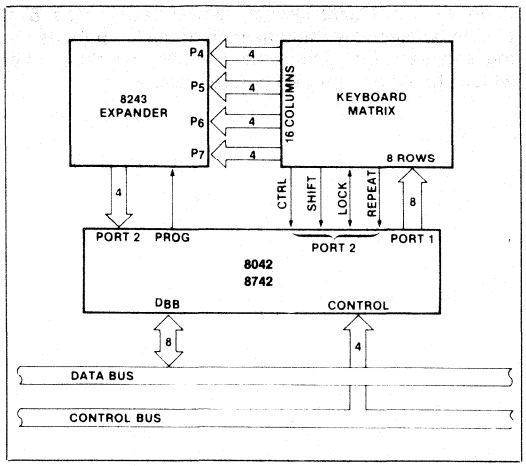

Figure 5. 8042/8742-8243 Keyboard Scanner

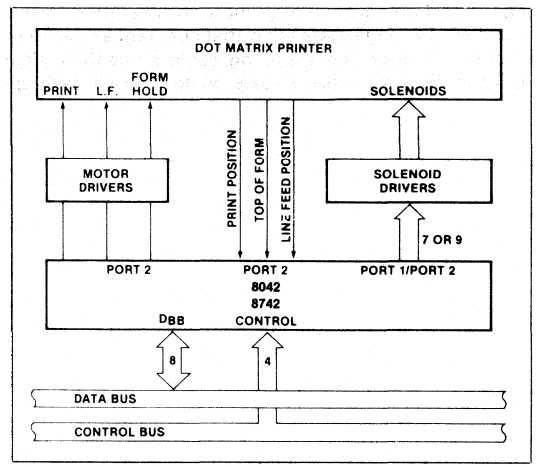

Figure 6. 8042/8742 80-Column Matrix Printer Interface

PROGRAMMING, VERIFYING, AND ERASING THE 8742 EPROM

Programming Verification

In brief, the programming process consists of: activating the program mode, applying an address, latching the address, applying data, and applying a programming pulse. Each word is programmed completely before moving on to the next and is followed by a verification step. The following is a list of the pins used for programming and a description of their functions:

Pin	Function
XTAL 1	Clock Input (1 to 12MHz)
$\overline{\text{Reset}}$	Initialization and Address Latching
Test 0	Selection of Program or Verify Mode
EA	Activation of Program/Verify Modes
BUS	Address and Data Input Data Output During Verify
P20-1	Address Input
V_{DD}	Programming Power Supply
PROG	Program Pulse Input

WARNING

An attempt to program a missocketed 8742 will result in severe damage to the part. An indication of a properly socketed part is the appearance of the SYNC clock output. The lack of this clock may be used to disable the programmer.

The Program/Verify sequence is:

1. A_0 = 0V, $\overline{CS}$ = 5V, EA = 5V, $\overline{RESET}$ = 0V, TEST0 = 5V, V_{DD} = 5V, clock applied or internal oscillator operating, BUS and PROG floating.
2. Insert 8742 in programming socket
3. TEST 0 = 0v (select program mode)
4. EA = 18V (active program mode)*
5. Address applied to BUS and P_{20-22}
6. $\overline{RESET}$ = 5v (latch address)
7. Data applied to BUS**
8. V_{DD} = 21V (programming power)**
9. PROG = 0v followed by one 50 ms pulse to 21V**
10. V_{DD} = 5v
11. TEST 0 = 5v (verify mode)

12. Read and verify data on BUS
13. TEST 0 = 0v
14. $\overline{\text{RESET}}$ = 0v and repeat from step 5
15. Programmer should be at conditions of step 1 when 8742 is removed from socket

*When verifying ROM, EA = 12V.
**Not used in verifying ROM procedure.

8742 Erasure Characteristics

The erasure characteristics of the 8742 are such that erasure begins to occur when exposed to light with wavelengths shorter than approximately 4000 Angstroms (Å). It should be noted that sunlight and certain types of fluorescent lamps have wavelengths in the 3000–4000Å range. Data show that constant exposure to room level fluorescent lighting could erase the typical 8742 in approximately 3 years while it would take approximately one week to cause erasure when exposed to direct sunlight. If the 8742 is to be exposed to these types of lighting conditions for extended periods of time, opaque labels are available from Intel which should be placed over the 8742 window to prevent unintentional erasure.

The recommended erasure procedure for the 8742 is exposure to shortwave ultraviolet light which has a wavelength of 2537Å. The integrated dose (i.e., UV intensity × exposure time) for erasure should be a minimum of 15 w-sec/cm^2. The erasure time with this dosage is approximately 15 to 20 minutes using an ultraviolet lamp with a 12,000 μW/cm^2 power rating. The 8742 should be placed within one inch of the lamp tubes during erasure. Some lamps have a filter on their tubes which should be removed before erasure.

ABSOLUTE MAXIMUM RATINGS*

Ambient Temperature Under Bias . . . . . 0°C to 70°C
Storage Temperature . . . . . – 65°C to + 150°C
Voltage on Any Pin With Respect to Ground . . . . . −0.5V to +7V
Power Dissipation . . . . . 1.5 Watt

NOTICE: Stresses above those listed under "Absolute Maximum Ratings" may cause permanent damage to the device. This is a stress rating only and functional operation of the device at these or any other conditions above those indicated in the operational sections of this specification is not implied. Exposure to absolute maximum rating conditions for extended periods may affect device reliability.

D.C. CHARACTERISTICS ($T_A = 0°$ to $+70°C$, $V_{CC} = V_{DD} = +5V \pm 10\%$)

Symbol	Parameter	8042		8742/8642		Units	Notes
		Min.	Max.	Min.	Max.		
V_{IL}	Input Low Voltage (Except XTAL1, XTAL2, RESET)	−0.5	0.8	−0.5	0.8	V	
V_{IL1}	Input Low Voltage (XTAL1, XTAL2, RESET)	−0.5	0.6	−0.5	0.6	V	
V_{IH}	Input High Voltage (Except XTAL1, XTAL2, RESET)	2.2	V_{CC}	2.2	V_{CC}	V	
V_{IH1}	Input High Voltage (XTAL1, XTAL2, RESET)	3.8	V_{CC}	3.8	V_{CC}	V	
V_{OL}	Output Low Voltage (D_0–D_7)		0.45		0.45	V	$I_{OL} = 2.0$ mA
V_{OL1}	Output Low Voltage (P_{10}–P_{17}, P_{20}–P_{27}, Sync)		0.45		0.45	V	$I_{OL} = 1.6$ mA
V_{OL2}	Output Low Voltage (PROG)		0.45		0.45	V	$I_{OL} = 1.0$ mA
V_{OH}	Output High Voltage (D_0–D_7)	2.4		2.4		V	$I_{OH} = -400\ \mu A$
V_{OH1}	Output High Voltage (All Other Outputs)	2.4		2.4		V	$I_{OH} = -50\ \mu A$
I_{IL}	Input Leakage Current (T_0, T_1, RD, WR, CS, A_0, EA)		± 10		± 10	μA	$V_{SS} \le V_{IN} \ge V_{CC}$
I_{OFL}	Output Leakage Current (D_0–D_7, High Z State)		± 10		± 10	μA	$V_{SS} + 0.45 \le V_{OUT} \le V_{CC}$
I_{LI}	Low Input Load Current (P_{10}–P_{17}, P_{20}–P_{27})		0.5		0.5	mA	$V_{IL} = 0.8V$
I_{LI1}	Low Input Load Current (RESET, SS)		0.2		0.2	mA	$V_{IL} = 0.8V$
I_{DD}	V_{DD} Supply Current		15		15	mA	Typical = 5 mA
$I_{CC} + I_{DD}$	Total Supply Current		125		125	mA	Typical=60 mA
I_{IH}	Input Leakage Current		100		100	μA	$V_{IN} = V_{CC}$
C_{IN}	Input Capacitance		10		10	pF	
$C_{I/O}$	I/O Capacitance		20		20	pF	

D.C. CHARACTERISTICS—PROGRAMMING ($T_A = 25°C \pm 5°C$, $V_{CC} = 5V \pm 5\%$, $V_{DD} = 21V \pm 1V$)

Symbol	Parameter	Min.	Max.	Unit	Test Conditions
V_{DDH}	V_{DD} Program Voltage High Level	20.0	21.0	V	
V_{DDL}	V_{DD} Voltage Low Level	4.75	5.25	V	
V_{PH}	PROG Program Voltage High Level	17.5	18.5	V	
V_{PL}	PROG Voltage Low Level		0.2	V	
V_{EAH}	EA Program or Verify Voltage High Level	17.5	18.5	V	
V_{EAL}	EA Voltage Low Level		5.25	V	
I_{DD}	V_{DD} High Voltage Supply Current		30.0	mA	
I_{PROG}	PROG High Voltage Supply Current		16.0	mA	
I_{EA}	EA High Voltage Supply Current		1.0	mA	

A.C. CHARACTERISTICS ($T_A = 0°C$ to $+70°C$, $V_{SS} = 0V$, $V_{CC} = V_{DD} = +5V \pm 10\%$)

DBB READ

Symbol	Parameter	8042		8642/8742		Units
		Min.	Max.	Min.	Max.	
t_{AR}	CS, A_0 Setup to RD↓	0		0		ns
t_{RA}	CS, A_0 Hold After RD↑	0		0		ns
t_{RR}	RD Pulse Width	160		160		ns
t_{AD}	CS, A_0 to Data Out Delay		130		130	ns[1]
t_{RD}	RD↓ to Data Out Delay		130		130	ns[1]
t_{DF}	RD↑ to Data Float Delay		85		85	ns
t_{CY}	Cycle Time	1.25	15	1.25	15	μs[2]

DBB WRITE

Symbol	Parameter	Min.	Max.	Min.	Max.	Units
t_{AW}	CS, A_0 Setup to WR↓	0		0		ns
t_{WA}	CS, A_0 Hold After WR↑	0		0		ns
t_{WW}	WR Pulse Width	160		160		ns
t_{DW}	Data Setup to WR↑	130		130		ns
t_{WD}	Data Hold After WR↑	0		0		ns

NOTES:
1. $C_L = 100$ pF.
2. 12 MHz XTAL.

A.C. CHARACTERISTICS—PROGRAMMING ($T_A = 25°C \pm 5°C$, $V_{CC} = 5V \pm 5\%$, $V_{DD} = 21V \pm 1V$)

Symbol	Parameter	Min.	Max.	Unit	Test Conditions
t_{AW}	Address Setup Time to $\overline{RESET}$ ↑	4tcy			
t_{WA}	Address Hold Time After $\overline{RESET}$ ↑	4tcy			
t_{DW}	Data in Setup Time to PROG ↑	4tcy			
t_{WD}	Data in Hold Time After PROG ↓	4tcy			
t_{PH}	$\overline{RESET}$ Hold Time to Verify	4tcy			
t_{VDDW}	V_{DD} Setup Time to PROG ↑	4tcy			
t_{VDDH}	V_{DD} Hold Time After PROG ↓	0			
t_{PW}	Program Pulse Width	50	60	mS	
t_{TW}	Test 0 Setup Time for Program Mode	4tcy			
t_{WT}	Test 0 Hold Time After Program Mode	4tcy			
t_{DO}	Test 0 to Data Out Delay		4tcy		
t_{WW}	$\overline{RESET}$ Pulse Width to Latch Address	4tcy			
t_r, t_f	V_{DD} and PROG Rise and Fall Times	0.5	2.0	μs	
t_{CY}	CPU Operation Cycle Time	5.0		μs	
t_{RE}	$\overline{RESET}$ Setup Time Before EA ↑.	4tcy			

Note: If TEST 0 is high, t_{DO} can be triggered by $\overline{RESET}$ ↑.

A.C. CHARACTERISTICS DMA

Symbol	Parameter	8042		8642/8742		Units
		Min.	Max.	Min.	Max.	
t_{ACC}	DACK to WR or RD	0		0		ns
t_{CAC}	RD or WR to DACK	0		0		ns
t_{ACD}	DACK to Data Valid		130		130	ns
t_{CRQ}	RD or WR to DRQ Cleared		100		100	ns[1]

NOTE:
1. $C_L = 150$ pF.

A.C. CHARACTERISTICS PORT 2 ($T_A = 0°C$ to $+70°C$, $V_{CC} = +5V \pm 10\%$)

Symbol	Parameter	8042		8642/8742		Units
		Min.	Max.	Min.	Max.	
t_{CP}	Port Control Setup Before Falling Edge of PROG	80		100		ns[1]
t_{PC}	Port Control Hold After Falling Edge of PROG	60		60		ns[2]
t_{PR}	PROG to Time P2 Input Must Be Valid		650		650	ns[1]
t_{PF}	Input Data Hold Time	0	150	0	150	ns[2]
t_{DP}	Output Data Setup Time	200		200		ns[1]
t_{PD}	Output Data Hold Time	60		60		ns[2]
t_{PP}	PROG Pulse Width	700		700		ns

NOTES:
1. $C_L = 80$ pF.
2. $C_L = 20$ pF.

A.C. TESTING INPUT, OUTPUT WAVEFORM

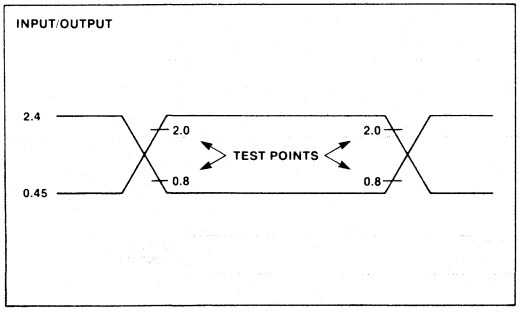

A.C. TESTING LOAD CIRCUIT

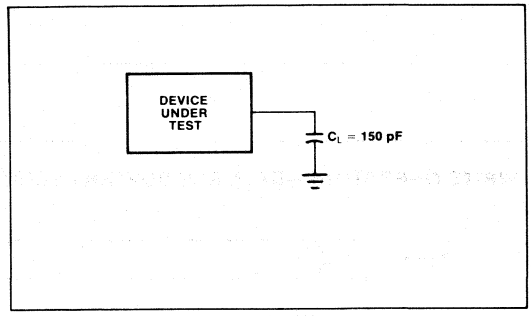

CRYSTAL OSCILLATOR MODE

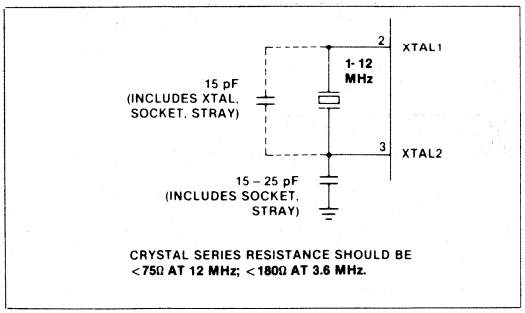

DRIVING FROM EXTERNAL SOURCE

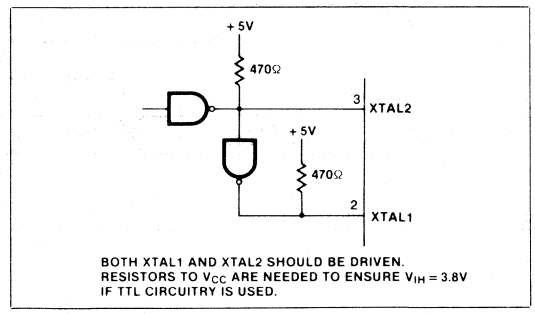

LC OSCILLATOR MODE

L	C	NOMINAL f
45 μH	20 pF	5.2 MHz
120 μH	20 pF	3.2 MHz

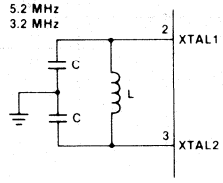

$$f \simeq \frac{1}{2\pi\sqrt{LC'}}$$

$$C' = \frac{C + 3C_{PP}}{2}$$

$C_{PP} \simeq 5 - 10$ pF PIN-TO-PIN CAPACITANCE

EACH C SHOULD BE APPROXIMATELY 20 pF, INCLUDING STRAY CAPACITANCE.

WAVEFORMS

READ OPERATION—DATA BUS BUFFER REGISTER

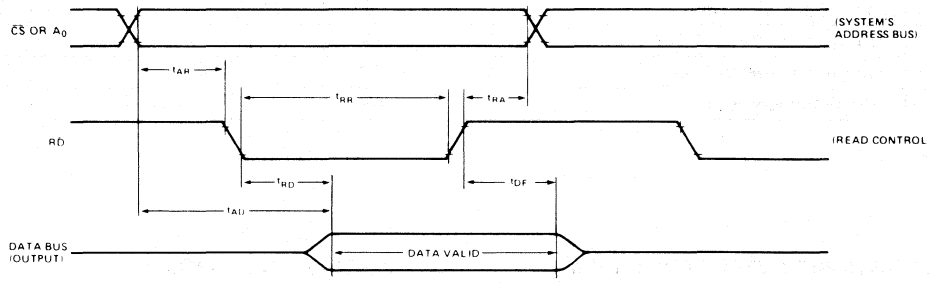

WRITE OPERATION—DATA BUS BUFFER REGISTER

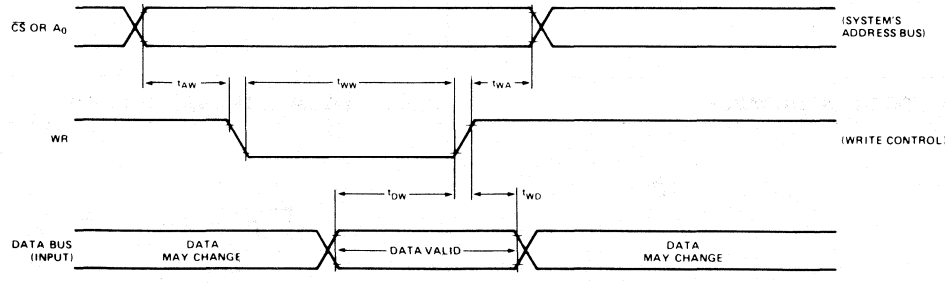

WAVEFORMS (Continued)

COMBINATION PROGRAM/VERIFY MODE (EPROM'S ONLY)

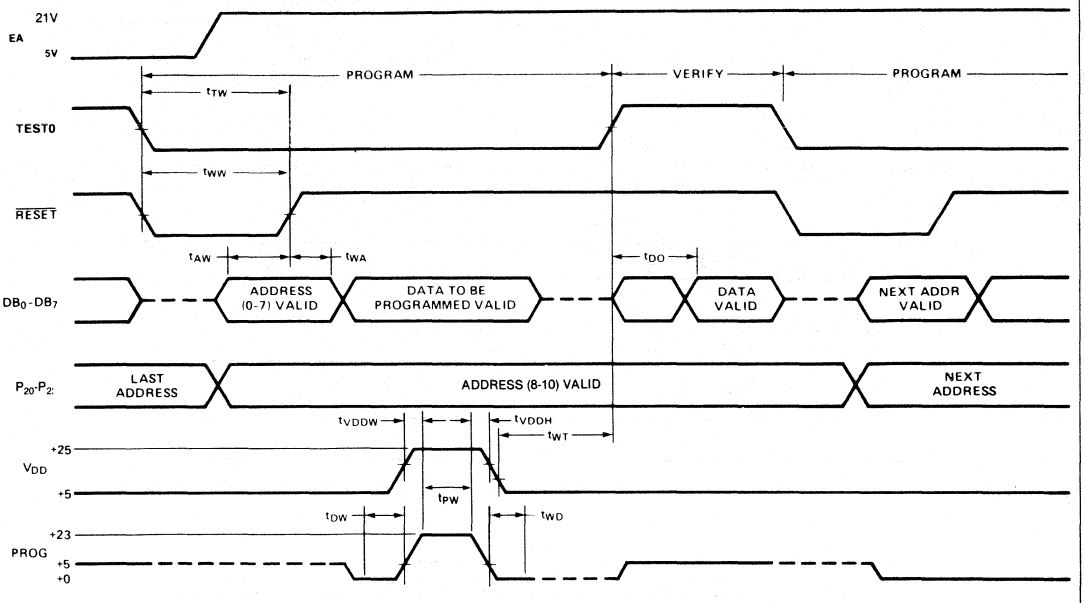

VERIFY MODE (ROM/EPROM)

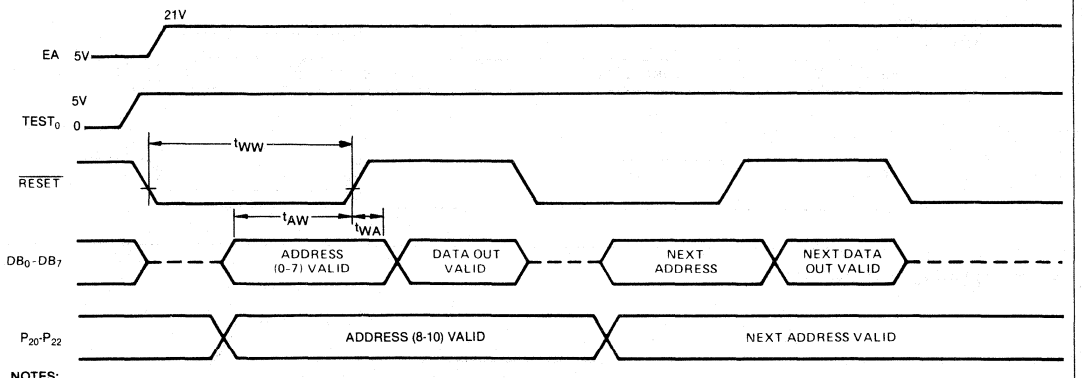

NOTES:
1. PROG MUST FLOAT IF EA IS LOW (i.e., = 21V) OR IF $TEST_0$ = 5V FOR THE 8742. FOR THE 8042 PROG MUST ALWAYS FLOAT.
2. A_0 MUST BE HELD LOW (i.e., = 0V) DURING PROGRAM/VERIFY MODES.
3. TEST 0 MUST BE HELD HIGH.

The 8742 EPROM can be programmed by the following Intel product:

1. Universal PROM Programmer (UPP series) peripheral of the Intellec® Development System with a UPP-549 Personality Card.

WAVEFORMS (Continued)

DMA

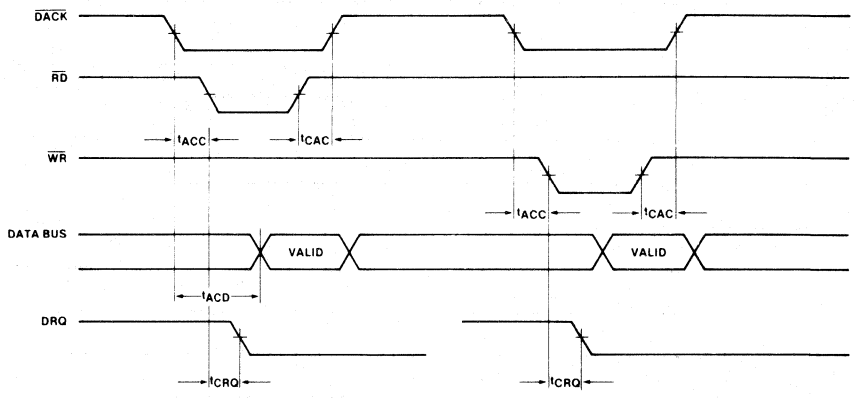

PORT 2

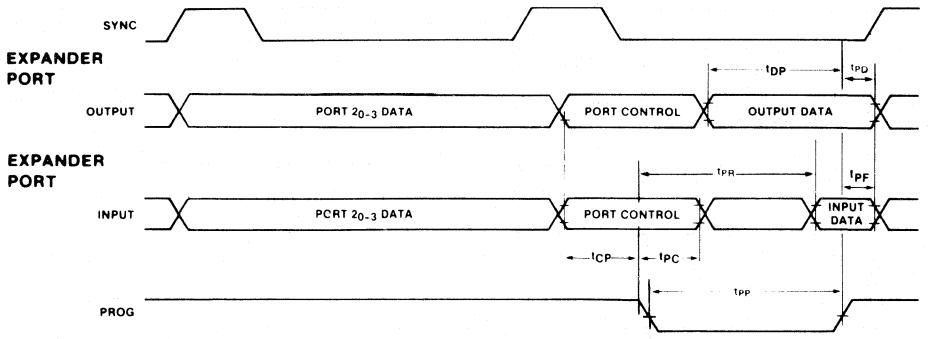

PORT TIMING DURING EA

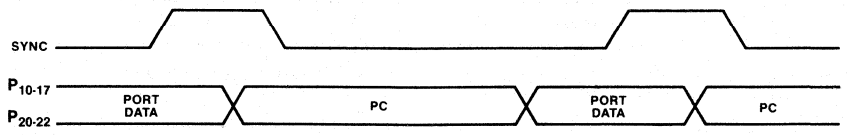

ON THE RISING EDGE OF SYNC AND EA IS ENABLED, PORT DATA IS VALID AND CAN BE STROBED. ON THE TRAILING EDGE OF SYNC THE PROGRAM COUNTER CONTENTS ARE AVAILABLE.

Table 2. UPI™ Instruction Set

Mnemonic	Description	Bytes	Cycles
ACCUMULATOR			
ADD A, Rr	Add register to A	1	1
ADD A, @Rr	Add data memory to A	1	1
ADD A, #data	Add immediate to A	2	2
ADDC A, Rr	Add register to A with carry	1	1
ADDC A, @Rr	Add data memory to A with carry	1	1
ADDC A, #data	Add immediate to A with carry	2	2
ANL A, Rr	AND register to A	1	1
ANL A, @Rr	AND data memory to A	1	1
ANL A, #data	AND immediate to A	2	2
ORL A, Rr	OR register to A	1	1
ORL A, @Rr	OR data memory to A	1	1
ORL A, #data	OR immediate to A	2	2
XRL A, Rr	Exclusive OR register to A	1	1
XRL A, @Rr	Exclusive OR data memory to A	1	1
XRL A, #data	Exclusive OR immediate to A	2	2
INC A	Increment A	1	1
DEC A	Decrement A	1	1
CLR A	Clear A	1	1
CPL A	Complement A	1	1
DA A	Decimal Adjust A	1	1
SWAP A	Swap nibbles of A	1	1
RL A	Rotate A left	1	1
RLC A	Rotate A left through carry	1	1
RR A	Rotate A right	1	1
RRC A	Rotate A right through carry	1	1
INPUT/OUTPUT			
IN A, Pp	Input port toA	1	2
OUTL Pp, A	Output A to port	1	2
ANL Pp, #data	AND immediate to port	2	2
ORL Pp, #data	OR immediate to port	2	2
IN A, DBB	Input DBB to A, clear IBF	1	1
OUT DBB, A	Output A to DBB, set OBF	1	1
MOV STS, A	A_4–A_7 to Bits 4–7 of Status	1	1
MOVD A, Pp	Input Expander port to A	1	2
MOVD Pp, A	Output A to Expander port	1	2
ANLD Pp, A	AND A to Expander port	1	2
ORLD Pp, A	OR A to Expander port	1	2

Mnemonic	Description	Bytes	Cycles
DATA MOVES			
MOV A, Rr	Move register to A	1	1
MOV A, @Rr	Move data memory to A	1	1
MOV A, #data	Move immediate TO A	2	2
MOV Rr, A	Move A to register	1	1
MOV @Rr, A	Move A to data memory	1	1
MOV Rr, #data	Move immediate to register	2	2
MOV @Rr, #data	Move immediate to data memory	2	2
MOV A, PSW	Move PSW to A	1	1
MOV PSW, A	Move A to PSW	1	1
XCH A, Rr	Exchange A and register	1	1
XCH A, @Rr	Exchange A and data memory	1	1
XCHD A, @Rr	Exchange digit of A and register	1	1
MOVP A, @A	Move to A from current page	1	2
MOVP3, A, @A	Move to A from page 3	1	2
TIMER/COUNTER			
MOV A, T	Read Timer/Counter	1	1
MOV T, A	Load Timer/Counter	1	1
STRT T	Start Timer	1	1
STRT CNT	start Counter	1	1
STOP TCNT	Stop Timer/Counter	1	1
EN TCNTI	Enable Timer/ Counter Interrupt	1	1
DIS TCNTI	Disable Timer/ Counter Interrupt	1	1
CONTROL			
EN DMA	Enable DMA Handshake Lines	1	1
EN I	Enable IBF Interrupt	1	1
DIS I	Disable IBF Interrupt	1	1
EN FLAGS	Enable Master Interrupts	1	1
SEL RB0	Select register bank 0	1	1
SEL RB1	Select register bank 1	1	1
NOP	No Operation	1	1
REGISTERS			
INC Rr	Increment register	1	1
INC @Rr	Increment data memory	1	1
DEC Rr	Decrement register	1	1
SUBROUTINE			
CALL addr	Jump to subroutine	2	2
RET	Return	1	2
RETR	Return and restore status	1	2

Table 2. UPI™ Instruction Set (Continued)

Mnemonic	Description	Bytes	Cycles
FLAGS			
CLR C	Clear Carry	1	1
CPL C	Complement Carry	1	1
CLR F0	Clear Flag 0	1	1
CPL F0	Complement Flag 0	1	1
CLR F1	Clear F1 Flag	1	1
CPL F1	Complement F1 Flag	1	1
BRANCH			
JMP addr	Jump unconditional	2	2
JMPP @A	Jump indirect	1	2
DJNZ Rr, addr	Decrement register and jump	2	2
JC addr	Jump on Carry=1	2	2
JNC addr	Jump on Carry=0	2	2
JZ addr	Jump on A Zero	2	2
JNZ addr	Jump on A not Zero	2	2
JT0 addr	Jump on T0=1	2	2
JNT0 addr	Jump on T0=0	2	2
JT1 addr	Jump on T1=1	2	2
JNT1 addr	Jump on T1=0	2	2
JF0 addr	Jump on F0 Flag=1	2	2
JF1 addr	Jump on F1 Flag=1	2	2
JTF addr	Jump on Timer Flag =1, Clear Flag	2	2
JNIBF addr	Jump on IBF Flag =0	2	2
JOBF addr	Jump on OBF Flag =1	2	2
JBb addr	Jump on Accumulator Bit	2	2

8231A
ARITHMETIC PROCESSING UNIT

- **Fixed Point Single and Double Precision (16/32 Bit)**
- **Floating Point Single Precision (32 Bit)**
- **Binary Data Formats**
- **Add, Subtract, Multiply and Divide**
- **Trigonometric and Inverse Trigonometric Functions**
- **Square Roots, Logarithms, Exponentiation**
- **Float to Fixed and Fixed to Float Conversions**
- **Stack Oriented Operand Storage**
- **Compatible with MCS-80™ and MCS-85™ Microprocessor Families**
- **Direct Memory Access or Programmed I/O Data Transfers**
- **End of Execution Signal**
- **General Purpose 8-Bit Data Bus Interface**
- **Standard 24 Pin Package**
- **+12 Volt and +5 Volt Power Supplies**
- **Advanced N-Channel Silicon Gate HMOS Technology**

The Intel® 8231A Arithmetic Processing Unit (APU) is a monolithic HMOS LSI device that provides high performance fixed and floating point arithmetic and floating point trigonometric operations. It may be used to enhance the mathematical capability of a wide variety of processor-oriented systems. Chebyshev polynomials are used in the implementation of the APU algorithms.

All transfers, including operand, result, status and command information, take place over an 8-bit bidirectional data bus. Operands are pushed onto an internal stack and commands are issued to perform operations on the data in the stack. Results are then available to be retrieved from the stack.

Transfers to and from the APU may be handled by the associated processor using conventional programmed I/O, or may be handled by a direct memory access controller for improved performance. Upon completion of each command, the APU issues an end of execution signal that may be used as an interrupt by the CPU to help coordinate program execution.

In January 1981 Intel will be converting from 8231 to 8231A. The 8231A provides enhancements over the 8231 to allow use in both asynchronous and synchronous systems.

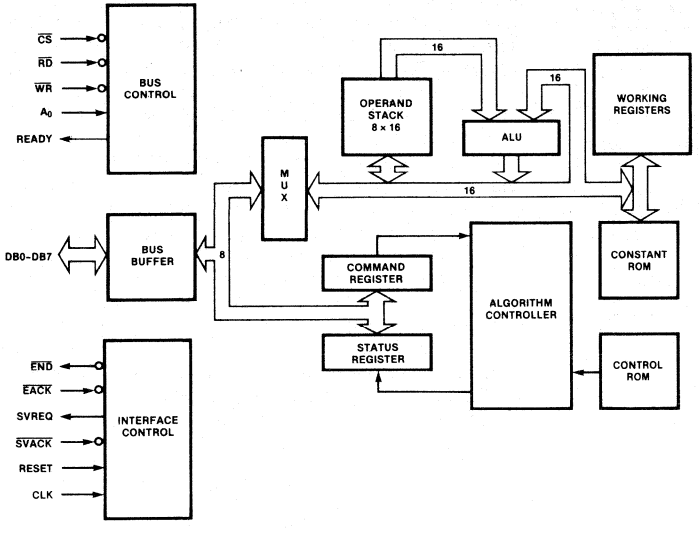

Figure 1. Block Diagram

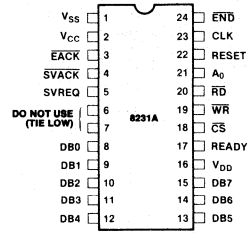

Figure 2. Pin Configuration

Table 1. Pin Description

Symbol	Pin No.	Type	Name and Function
V_{CC}	2		**Power:** +5 Volt power supply.
V_{DD}	16		**Power:** +12 Volt power supply.
V_{SS}	1		**Ground.**
CLK	23	I	**Clock:** An external, TTL compatible, timing source is applied to the CLK pin.
RESET	22	I	**Reset:** The active high reset signal provides initialization for the chip. RESET also terminates any operation in progress. RESET clears the status register and places the 8231A into the idle state. Stack contents and command registers are not affected (5 clock cycles).
$\overline{CS}$	18	I	**Chip Select:** $\overline{CS}$ is an active low input signal which selects the 8231A and enables communication with the data bus.
A_0	21	I	**Address:** In conjunction with the $\overline{RD}$ and WR signals, the A_0 control line establishes the type of communication that is to be performed with the 8231A as shown below:

A_0	$\overline{RD}$	$\overline{WR}$	Function
0	1	0	Enter data byte into stack
0	0	1	Read data byte from stack
1	1	0	Enter command
1	0	1	Read status

$\overline{RD}$	20	I	**Read:** This active low input indicates that data or status is to be read from the 8231A if CS is low.
$\overline{WR}$	19	I	**Write:** This active low input indicates that data or a command is to be written into the 8231A if CS is low.
$\overline{EACK}$	3	I	**End of Execution:** This active low input clears the end of execution output signal ($\overline{END}$). If $\overline{EACK}$ is tied low, the $\overline{END}$ output will be a pulse that is one clock period wide.
$\overline{SVACK}$	4	I	**Service Request:** This active low input clears the service request output (SVREQ).
$\overline{END}$	24	O	**End:** This active low, open-drain output indicates that execution of the previously entered command is complete. It can be used as an interrupt request and is cleared by $\overline{EACK}$, RESET or any read or write access to the 8231.
SVREQ	5	O	**Service Request:** This active high output signal indicates that command execution is complete and that post execution service was requested in the previous command byte. It is cleared by $\overline{SVACK}$, the next command output to the device, or by RESET.
READY	17	O	**Ready:** This active high output indicates that the 8231A is able to accept communication with the data bus. When an attempt is made to read data, write data or to enter a new command while the 8231A is executing a command, READY goes low until execution of the current command is complete (See READY Operation, p. 5).
DB0-DB7	8-15	I/O	**Data Bus:** These eight bidirectional lines provide for transfer of commands, status and data between the 8231A and the CPU. The 8231A can drive the data bus only when CS and RD are low.

COMMAND STRUCTURE

Each command entered into the 8231A consists of a single 8-bit byte having the format illustrated below:

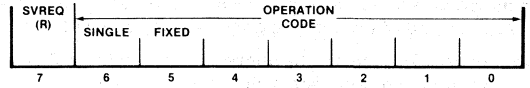

Bits 0-4 select the operation to be performed as shown in the table. Bits 5-6 select the data format appropriate to the selected operation. If bit 5 is a 1, a fixed point data format is specified. If bit 5 is a 0, floating point format is specified. Bit 6 selects the precision of the data to be operated upon by fixed point commands only (if bit 5 = 0, bit 6 must be 0). If bit 6 is a 1, single-precision (16-bit) operands are assumed. If bit 6 is a 0, double-precision (32-bit) operands are indicated. Results are undefined for all illegal combinations of bits in the command byte. Bit 7 indicates whether a service request is to be issued after the command is executed. If bit 7 is a 1, the service request output (SVREQ) will go high at the conclusion of the command and will remain high until reset by a low level on the service acknowledge pin ($\overline{SVACK}$) or until completion of execution of the succeeding command where service request (bit 7) is 0. Each command issued to the 8231A requests post execution service based upon the state of bit 7 in the command byte. When bit 7 is a 0, SVREQ remains low.

Table 2. 32-Bit Floating Point Instructions

Instruction	Description	Hex[1] Code	Stack Contents[2] After Execution A B C D	Status Flags[4] Affected
ACOS	Inverse Cosine of A	0 6	R U U U	S, Z, E
ASIN	Inverse Sine of A	0 5	R U U U	S, Z, E
ATAN	Inverse Tangent of A	0 7	R B U U	S, Z
CHSF	Sign Change of A	1 5	R B C D	S, Z
COS	Cosine of A (radians)	0 3	R B U U	S, Z
EXP	e^A Function	0 A	R B U U	S, Z, E
FADD	Add A and B	1 0	R C D U	S, Z, E
FDIV	Divide B by A	1 3	R C D U	S, Z, E
FLTD	32-Bit Integer to Floating Point Conversion	1 C	R B C U	S, Z
FLTS	16-Bit Integer to Floating Point Conversion	1 D	R B C U	S, Z
FMUL	Multiply A and B	1 2	R C D U	S, Z, E
FSUB	Subtract A from B	1 1	R C D U	S, Z, E
LOG	Common Logarithm (base 10) of A	0 8	R B U U	S, Z, E
LN	Natural Logarithm of A	0 9	R B U U	S, Z, E
POPF	Stack Pop	1 8	B C D A	S, Z
PTOF	Stack Push	1 7	A A B C	S, Z
PUPI	Push π onto Stack	1 A	R A B C	S, Z
PWR	B^A Power Function	0 B	R C U U	S, Z, E
SIN	Sine of A (radians)	0 2	R B U U	S, Z
SQRT	Square Root of A	0 1	R B C U	S, Z, E
TAN	Tangent of A (radians)	0 4	R B U U	S, Z, E
XCHF	Exchange A and B	1 9	B A C D	S, Z

Table 3. 32-Bit Integer Instructions

Instruction	Description	Hex[1] Code	Stack Contents[2] After Execution A B C D	Status Flags[4] Affected
CHSD	Sign Change of A	3 4	R B C D	S, Z, O
DADD	Add A and B	2 C	R C D A	S, Z, C, E
DDIV	Divide B by A	2 F	R C D U	S, Z, E
DMUL	Multiply A and B (R = lower 32-bits)	2 E	R C D U	S, Z, O
DMUU	Multiply A and B (R = upper 32-bits)	3 6	R C D U	S, Z, O
DSUB	Subtract A from B	2 D	R C D A	S, Z, C, O
FIXD	Floating Point to Integer Conversion	1 E	R B C U	S, Z, O
POPD	Stack Pop	3 8	B C D A	S, Z
PTOD	Stack Push	3 7	A A B C	S, Z
XCHD	Exchange A and B	3 9	B A C D	S, Z

Table 4. 16-Bit Integer Instructions

Instruction	Description	Hex[1] Code	Stack Contents[3] After Execution A_U A_L B_U B_L C_U C_L D_U D_L	Status Flags[4] Affected
CHSS	Change Sign of A_U	7 4	R A_L B_U B_L C_U C_L D_U D_L	S, Z, O
FIXS	Floating Point to Integer Conversion	1 F	R B_U B_L C_U C_L U U U	S, Z, O
POPS	Stack Pop	7 8	A_L B_U B_L C_U C_L D_U D_L A_U	S, Z
PTOS	Stack Push	7 7	A_U A_U A_L B_U B_L C_U C_L D_U	S, Z
SADD	Add A_U and A_L	6 C	R B_U B_L C_U C_L D_U D_L A_U	S, Z, C, E
SDIV	Divide A_L by A_U	6 F	R B_U B_L C_U C_L D_U D_L U	S, Z, E
SMUL	Multiply A_L by A_U (R = lower 16-bits)	6 E	R B_U B_L C_U C_L D_U D_L U	S, Z, E
SMUU	Multiply A_L by A_U (R = upper 16-bits)	7 6	R B_U B_L C_U C_L D_U D_L U	S, Z, E
SSUB	Subtract A_U from A_L	6 D	R B_U B_L C_U C_L D_U D_L A_U	S, Z, C, E
XCHS	Exchange A_U and A_L	7 9	A_L A_U B_U B_L C_U C_L D_U D_L	S, Z
NOP	No Operation	0 0	A_U A_L B_U B_L C_U C_L D_U D_L	

Notes: 1. In the hex code column, SVREQ is a 0.
2. The stack initially is composed of four 32-bit numbers (A, B, C, D). A is equivalent to Top Of Stack (TOS) and B is Next On Stack (NOS). Upon completion of a command the stack is composed of: the result (R); undefined (U); or the initial contents (A, B, C, or D).
3. The stack initially is composed of eight 16-bit numbers (A_U, A_L, B_U, B_L, C_U, C_L, D_U, D_L). A_U is the TOS and A_L is NOS. Upon completion of a command the stack is composed of: the result (R); undefined (U); or the initial contents (A_U, A_L, B_U, B_L, . . .).
4. Nomenclature: Sign (S); Zero (Z); Overflow (O); Carry (C); Error Code Field (E).

DATA FORMATS

The 8231A arithmetic processing unit handles operands in both fixed point and floating point formats. Fixed point operands may be represented in either single (16-bit operands) or double precision (32-bit operands), and are always represented as binary, two's complement values.

SINGLE PRECISION FIXED POINT FORMAT

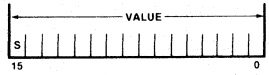

DOUBLE PRECISION FIXED POINT FORMAT

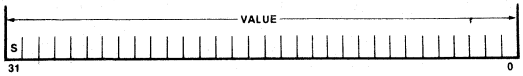

The sign (positive or negative) of the operand is located in the most significant bit (MSB). Positive values are represented by a sign bit of zero (S = 0). Negative values are represented by the two's complement of the corresponding positive value with a sign bit equal to 1 (S = 1). The range of values that may be accommodated by each of these formats is $-32{,}768$ to $+32{,}767$ for single precision and $-2{,}147{,}483{,}648$ to $+2{,}147{,}483{,}647$ for double precision.

Floating point binary values are represented in a format that permits arithmetic to be performed in a fashion analogous to operations with decimal values expressed in scientific notation.

$$(5.83 \times 10^{2})\,(8.16 \times 10^{1}) = (4.75728 \times 10^{4})$$

In the decimal system, data may be expressed as values between 0 and 10 times 10 raised to a power that effectively shifts the implied decimal point right or left the number of places necessary to express the result in conventional form (e.g., 47,572.8). The value-portion of the data is called the mantissa. The exponent may be either negative or positive.

The concept of floating point notation has both a gain and a loss associated with it. The gain is the ability to represent the significant digits of data with values spanning a large dynamic range limited only by the capacity of the exponent field. For example, in decimal notation if the exponent field is two digits wide, and the mantissa is five digits, a range of values (positive or negative) from 1.0000×10^{-99} to $9.9999 \times 10^{+99}$ can be accommodated. The loss is that only the significant digits of the value can be represented. Thus there is no distinction in this representation between the values 123451 and 123452, for example, since each would be expressed as: 1.2345×10^{5}. The sixth digit has been discarded. In most applications where the dynamic range of values to be represented is large, the loss of significance, and hence accuracy of results, is a minor consideration. For greater precision a fixed point format could be chosen, although with a loss of potential dynamic range.

The 8231A is a binary arithmetic processor and requires that floating point data be represented by a fractional mantissa value between .5 and 1 multiplied by 2 raised to an appropriate power. This is expressed as follows:

$$\text{value} = \text{mantissa} \times 2^{\text{exponent}}$$

For example, the value 100.5 expressed in this form is $0.1100\ 1001 \times 2^{7}$. The decimal equivalent of this value may be computed by summing the components (powers of two) of the mantissa and then multiplying by the exponent as shown below:

$$\begin{aligned}\text{value} &= (2^{-1} + 2^{-2} + 2^{-5} + 2^{-8}) \times 2^{7} \\ &= 0.5 + 0.25 + 0.03125 + 0.00290625) \times 128 \\ &= 0.78515625 \times 128 \\ &= 100.5\end{aligned}$$

FLOATING POINT FORMAT

The format for floating point values in the 8231A is given below. The mantissa is expressed as a 24-bit (fractional) value; the exponent is expressed as a two's complement 7-bit value having a range of -64 to $+63$. The most significant bit is the sign of the mantissa (0 = positive, 1 = negative), for a total of 32 bits. The binary point is assumed to be to the left of the most significant mantissa bit (bit 23). All floating point data values must be normalized. Bit 23 must be equal to 1, except for the value zero, which is represented by all zeros.

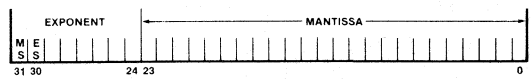

The range of values that can be represented in this format is $\pm(2.7 \times 10^{-20}$ to $9.2 \times 10^{18})$ and zero.

FUNCTIONAL DESCRIPTION

STACK CONTROL

The user interface to the 8231A includes access to an 8 level 16-bit wide data stack. Since single precision fixed point operands are 16-bits in length, eight such values may be maintained in the stack. When using double precision fixed point or floating point formats four values may be stored. The stack in these two configurations can be visualized as shown below:

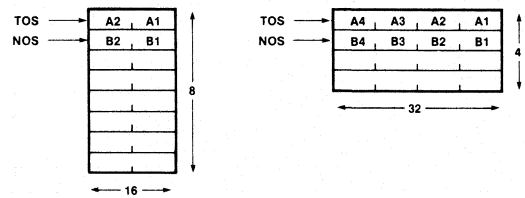

Data are written onto the stack, eight bits at a time, in the order shown (A1, A2, A3, . . .). Data are removed from the stack in reverse byte order (A4, A3, A2 . . .). Data should be entered onto the stack in multiples of the number of bytes appropriate to the chosen data format.

DATA ENTRY

Data entry is accomplished by bringing the chip select ($\overline{CS}$), the command/data line (A_0), and $\overline{WR}$ low, as shown in the timing diagram. The entry of each new data word "pushes down" the previously entered data and places the new byte on the top of stack (TOS). Data on the bottom of the stack prior to a stack entry are lost.

DATA REMOVAL

Data are removed from the stack in the 8231A by bringing chip select ($\overline{CS}$), command/data (A_0), and $\overline{RD}$ low as shown in the timing diagram. The removal of each data word redefines TOS so that the next successive byte to be removed becomes TOS. Data removed from the stack rotates to the bottom of the stack.

COMMAND ENTRY

After the appropriate number of bytes of data have been entered onto the stack, a command may be issued to perform an operation on that data. Commands which require two operands for execution (e.g., add) operate on the TOS and NOS values. Single operand commands operate only on the TOS.

Commands are issued to the 8231A by bringing the chip select ($\overline{CS}$) line low, command data (A_0) line high, and $\overline{WR}$ line low as indicated by the timing diagram. After a command is issued, the CPU can continue execution of its program concurrently with the 8231A command execution.

COMMAND COMPLETION

The 8231A signals the completion of each command execution by lowering the End Execution line ($\overline{END}$). Simultaneously, the busy bit in the status register is cleared and the Service Request bit of the command register is checked. If it is a "1" the service request output level (SVREQ) is raised. $\overline{END}$ is cleared on receipt of an active low End Acknowledge ($\overline{EACK}$) pulse. Similarly, the service request line is cleared by recognition of an active low Service Acknowledge ($\overline{SVACK}$) pulse.

READY OPERATION

An active high ready (READY) is provided. This line is high in its quiescent state and is pulled low by the 8231A under the following conditions:

1. A previously initiated operation is in progress (device busy) and Command Entry has been attempted. In this case, the READY line will be pulled low and remain low until completion of the current command execution. It will then go high, permitting entry of the new command.
2. A previously initiated operation is in progress and stack access has been attempted. In this case, the READY line will be pulled low, will remain in that state until execution is complete, and will then be raised to permit completion of the stack access.
3. The 8231A is not busy, and data removal has been requested. READY will be pulled low for the length of time necessary to transfer the byte from the top of stack to the interface latch, and will then go high, indicating availability of the data.
4. The 8231A is not busy, and a data entry has been requested. READY will be pulled low for the length of time required to ascertain if the preceding data byte, if any, has been written to the stack. If so READY will immediately go high. If not, READY will remain low until the interface latch is free and will then go high.
5. When a status read has been requested, READY will be pulled low for the length of time necessary to transfer the status to the interface latch, and will then be raised to permit completion of the status read. Status may be read whether or not the 8231A is busy.

When READY goes low, the APU expects the bus control signals present at the time to remain stable until READY goes high.

DEVICE STATUS

Device status is provided by means of an internal status register whose format is shown below:

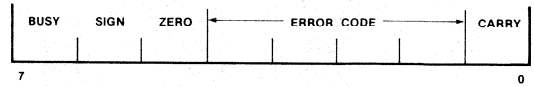

BUSY: Indicates that 8231A is currently executing a command (1=Busy)

SIGN: Indicates that the value on the top of stack is negative (1 = Negative)

ZERO: Indicates that the value on the top of stack is zero (1 = Value is zero)

ERROR CODE: This field contains an indication of the validity of the result of the last operation. The error codes are:

- 0000 — No error
- 1000 — Divide by zero
- 0100 — Square root or log of negative number
- 1100 — Argument of inverse sine, cosine, or e^x too large
- XX10 — Underflow
- XX01 — Overflow

CARRY: Previous operation resulted in carry or borrow from most significant bit. (1 = Carry/Borrow, 0 = No Carry/No Borrow.)

If the BUSY bit in the status register is a one, the other status bits are not defined; if zero, indicating not busy, the operation is complete and the other status bits are defined as given above.

READ STATUS

The 8231A status register can be read by the CPU at any time (whether an operation is in progress or not) by bringing the chip select ($\overline{CS}$) low, the command/data line (A_0) high, and lowering $\overline{RD}$. The status register is then gated onto the data bus and may be input by the CPU.

EXECUTION TIMES

Timing for execution of the 8231A command set is contained below. All times are given in terms of clock cycles. Where substantial variation of execution times

is possible, the minimum and maximum values are quoted; otherwise, typical values are given. Variations are data dependent.

Total execution times may require allowances for operand transfer into the APU, command execution, and result retrieval from the APU. Except for command execution, these times will be heavily influenced by the nature of the data, the control interface used, the speed of memory, the CPU used, the priority allotted to DMA and Interrupt operations, the size and number of operands to be transferred, and the use of chained calculations, etc.

Table 5. Command Execution Times

Command Mnemonic	Clock Cycles	Command Mnemonic	Clock Cycles	Command Mnemonic	Clock Cycles	Command Mnemonic	Clock Cycles
SADD	17	FADD	54-368	LN	4298-6956	POPF	12
SSUB	30	FSUB	70-370	EXP	3794-4878	XCHS	18
SMUL	84-94	FMUL	146-168	PWR	8290-12032	XCHD	26
SMUU	80-98						
SDIV	84-94	FDIV	154-184	NOP	4	XCHF	26
DADD	21	SORT	800	CHSS	23	PUPI	16
DSUB	38	SIN	4464	CHSD	27		
DMUL	194-210	COS	4118	CHSF	18		
DMUU	182-218						
DDIV	208	TAN	5754	PTOS	16		
FIXS	92-216	ASIN	7668	PTOD	20		
FIXD	100-346	ACOS	7734	PTOF	20		
FLTS	98-186	ATAN	6006	POPS	10		
FLTD	98-378	LOG	4474-7132	POPD	12		

DERIVED FUNCTION DISCUSSION

Computer approximations of transcendental functions are often based on some form of polynomial equation, such as:

$$F(X) = A_0 + A_1X + A_2X^2 + A_3X^3 + A_4X^4 \ldots \quad (1\text{-}1)$$

The primary shortcoming of an approximation in this form is that it typically exhibits very large errors when the magnitude of $|X|$ is large, although the errors are small when $|X|$ is small. With polynomials in this form, the error distribution is markedly uneven over any arbitrary interval.

A set of approximating functions exists that not only minimizes the maximum error but also provides an even distribution of errors within the selected data representation interval. These are known as Chebyshev Polynomials and are are based upon cosine functions. These functions are defined as follows:

$$T_n(X) = \text{Cos } n\theta; \text{ where } n = 0,1,2 \ldots \quad (1\text{-}2)$$
$$\theta = \text{Cos}^{-1}X$$

The various terms of the Chebyshev series can be computed as shown below:

$$T_0(X) = \text{Cos}(0 \cdot \theta) = \text{Cos}(0) = 1 \quad (1\text{-}4)$$
$$T_1(X) = \text{Cos}(\text{Cos}^{-1}X) = X \quad (1\text{-}5)$$
$$T_2(X) = \text{Cos } 2\theta = 2\text{Cos}^2\theta - 1 = 2\text{Cos}^2(\text{Cos}^{-1}X) - 1 \quad (1\text{-}6)$$
$$= 2X^2 - 1$$

In general, the next term in the Chebyshev series can be recursively derived from the previous term as follows:

$$T_n(X) = 2X[T_n - 1(X)] - T_n - 2(X); n \geq 2 \quad (1\text{-}7)$$

Common logarithms are computed by multiplication of the natural logarithm by the conversion factor 0.43429448 and the error function is therefore the same as that for natural logarithm. The power function is realized by combination of natural log and exponential functions according to the equation:

$$X^Y = e^{Y\text{Ln}x}.$$

The error for the power function is a combination of that for the logarithm and exponential functions.

Each of the derived functions is an approximation of the true function. Thus the result of a derived function will have an error. The absolute error is the difference between the function's result and the true result. A more useful measure of the function's error is relative error (absolute error/true result). This gives a measurement of the significant digits of algorithm accuracy. For the derived functions except LN, LOG, and PWR the relative error is typically 4×10^{-7}. For PWR the relative error is the summation of the EXP and LN errors, 7×10^{-7}. For LN and LOG, the absolute error is 2×10^{-7}.

APPLICATION INFORMATION

The diagram in Figure 4 shows the interface connections for the APU with operand transfers handled by an 8237 DMA controller, and CPU coordination handled by an Interrupt Controller. The APU interrupts the CPU to indicate that a command has been completed. When the performance enhancements provided by the DMA and Interrupt operations are not required, the APU interface can be simplified as shown in Figure 3. The 8231A APU is designed with a general purpose 8-bit data bus and interface control so that it can be conveniently used with any general 8-bit processor.

In many systems it will be convenient to use the microcomputer system clock to drive the APU clock input. In the case of 8080A systems it would be the ϕ2TTL signal. Its cycle time will usually fall in the range of 250 ns to 1000 ns, depending on the system speed.

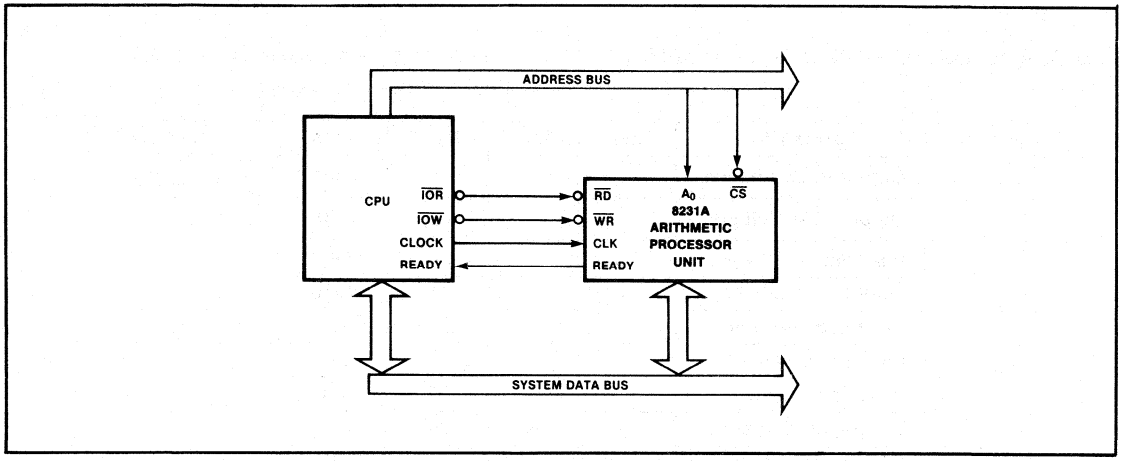

Figure 3. Minimum Configuration Example

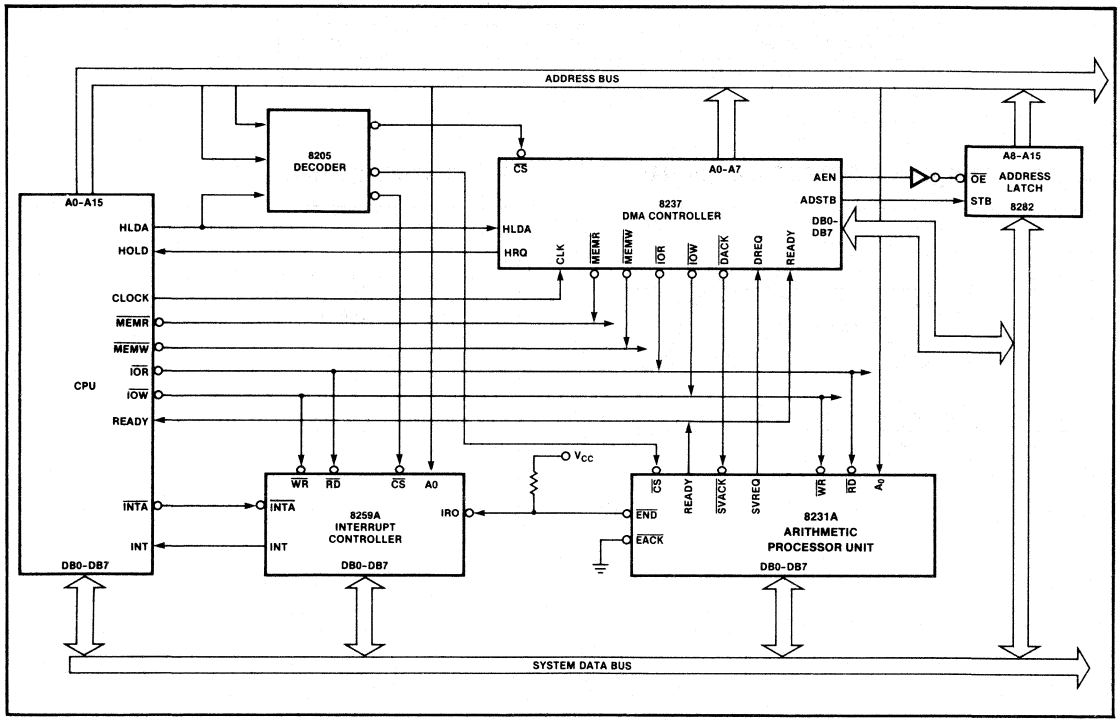

Figure 4. High Performance Configuration Example

ABSOLUTE MAXIMUM RATINGS*

Storage Temperature ..... −65°C to +150°C
Ambient Temperature Under Bias ..... 0°C to 70°C
V_{DD} with Respect to V_{SS} ..... −0.5V to +15.0V
V_{CC} with Respect to V_{SS} ..... −0.5V to +7.0V
All Signal Voltages with Respect to V_{SS} ..... −0.5V to +7.0V
Power Dissipation 2.0W

NOTICE: Stresses above those listed under "Absolute Maximum Ratings" may cause permanent damage to the device. This is a stress rating only and functional operation of the device at these or any other conditions above those indicated in the operational sections of this specification is not implied. Exposure to absolute maximum rating conditions for extended periods may effect device reliability.

D.C. AND OPERATING CHARACTERISTICS (T_A = 0°C to 70°C, V_{SS} = 0V, V_{CC} = +5V ± 10%, V_{DD} = +12V ± 10%)

Parameters	Description	Min.	Typ.	Max.	Units	Test Conditions
V_{OH}	Output HIGH Voltage	3.7			Volts	I_{OH} = −200 μA
V_{OL}	Output LOW Voltage			0.4	Volts	I_{OL} = 3.2 mA
V_{IH}	Input HIGH Voltage	2.0		V_{CC}	Volts	
V_{IL}	Input LOW Voltage	−0.5		0.8	Volts	
I_{IL}	Input Load Current			±10	μA	$V_{SS} \leq V_{IN} \leq V_{CC}$
I_{OFL}	Data Bus Leakage			±10	μA	V_{SS} +0.45 ≤ V_{OUT} ≤ V_{CC}
I_{CC}	V_{CC} Supply Current		50	95	mA	
I_{DD}	V_{DD} Supply Current		50	95	mA	
C_O	Output Capacitance		8		pF	fc = 1.0 MHz, Inputs = 0V
C_I	Input Capacitance		5		pF	
C_{IO}	I/O Capacitance		10		pF	

A.C. TESTING INPUT, OUTPUT WAVEFORM

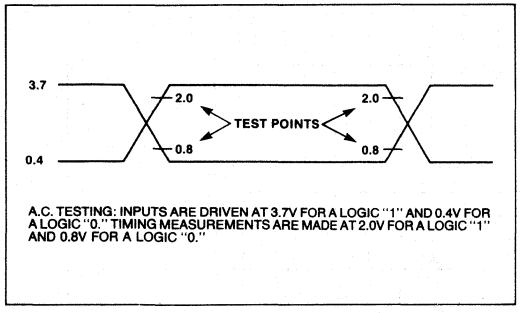

A.C. TESTING: INPUTS ARE DRIVEN AT 3.7V FOR A LOGIC "1" AND 0.4V FOR A LOGIC "0." TIMING MEASUREMENTS ARE MADE AT 2.0V FOR A LOGIC "1" AND 0.8V FOR A LOGIC "0."

A.C. TESTING LOAD CIRCUIT

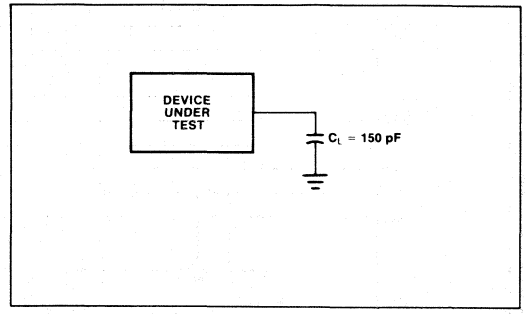

A.C. CHARACTERISTICS (T_A = 0°C to 70°C, V_{SS} = 0V, V_{CC} = +5V ± 10%, V_{DD} = +12V ± 10%)

READ OPERATION

Symbol	Parameter		8231A-8		8231A-3		8231A		Units
			Min.	Max.	Min.	Max.	Min.	Max.	
t_{AR}	A_0, $\overline{CS}$ Setup to $\overline{RD}$		0		0		0		ns
t_{RA}	A_0, $\overline{CS}$ Hold from $\overline{RD}$		0		0		0		ns
t_{RY}	READY ↓ from $\overline{RD}$ ↓ Delay (Note 2)			150		100		100	ns
t_{YR}	READY ↑ to $\overline{RD}$ ↑		0		0		0		ns
t_{RRR}	READY Pulse Width (Note 3)	Data	3.5 t_{CY} + 50		3.5 t_{CY} + 50		3.5 t_{CY} + 50		ns
		Status	1.5 t_{CY} + 50		1.5 t_{CY} + 50		1.5 t_{CY} + 50		ns
t_{RDE}	Data Bus Enable from $\overline{RD}$ ↓		50		50		50		ns
t_{DRY}	Data Valid to READY ↑		0		0		0		ns
t_{DF}	Data Float after $\overline{RD}$ ↑		50	200	50	150	50	100	ns

WRITE OPERATION

Symbol	Parameter		8231A-8		8231A-3		8231A		Units
			Min.	Max.	Min.	Max.	Min.	Max.	
t_{AW}	A_0, $\overline{CS}$ Setup to $\overline{WR}$		0		0		0		ns
t_{WA}	A_0, $\overline{CS}$ Hold after $\overline{WR}$		60		30		25		ns
t_{WY}	READY ↓ from $\overline{WR}$ ↓ Delay (Note 2)			150		100		100	ns
t_{YW}	READY ↑ to $\overline{WR}$ ↑		0		0		0		ns
t_{RRW}	READY Pulse Width (Note 4)			50		50		50	ns
t_{WI}	Write Inactive Time (Note 4)	Command	4 t_{CY}		4 t_{CY}		4 t_{CY}		ns
		Data	5 t_{CY}		5 t_{CY}		5 t_{CY}		ns
t_{DW}	Data Setup to $\overline{WR}$		150		100		100		ns
t_{WD}	Data Hold after $\overline{WR}$		20		20		20		ns

OTHER TIMINGS

Symbol	Parameter	8231A-8		8231A-3		8231A		Units
		Min.	Max.	Min.	Max.	Min.	Max.	
t_{CY}	Clock Period	480	5000	320	3300	250	2500	ns
t_{CPH}	Clock Pulse High Width	200		140		100		ns
t_{CPL}	Clock Pulse Low Width	240		160		120		ns
t_{EE}	$\overline{END}$ Pulse Width (Note 5)	400		300		200		ns
t_{EAE}	$\overline{EACK}$ ↓ to $\overline{END}$ ↑ Delay		200		175		150	ns
t_{AA}	$\overline{EACK}$ Pulse Width	100		75		50		ns
t_{SA}	$\overline{SVACK}$ ↓ to SVREQ ↓ Delay		300		200		150	ns
t_{SS}	$\overline{SVACK}$ Pulse Width	100		75		50		ns

NOTES:

1. Typical values are for T_A=25°C, nominal supply voltages and nominal processing parameters.
2. READY is pulled low for both command and data operations.
3. Minimum values shown assume no previously entered command is being executed for the data access. If a previously entered command is being executed, READY low pulse width is the time to complete execution plus the time shown. Status may be read at any time without exceeding the time shown.
4. READY low pulse width is less than 50 ns when writing into the data port or the control port as long as the duty cycle requirement (t_{WI}) is observed and no previous command is being executed. t_{WI} may be safely violated as long as the extended t_{RRW} that results is observed. If a previously entered command is being executed, READY low pulse width is the time to complete execution plus the time shown. These timings refer specifically to the 8231A.
5. $\overline{END}$ low pulse width is specified for $\overline{EACK}$ tied to VSS. Otherwise t_{EAE} applies.

WAVEFORMS

READ OPERATION

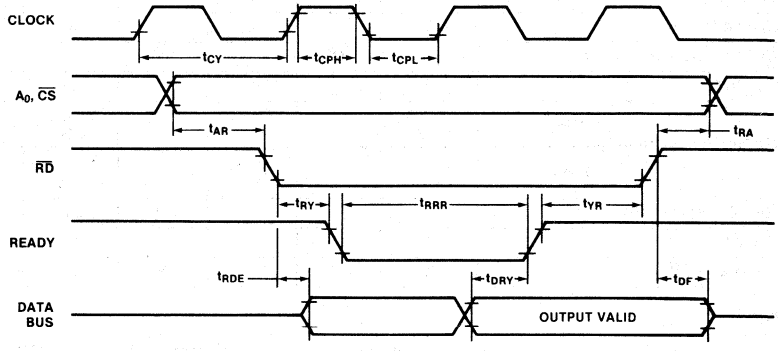

WRITE OPERATION

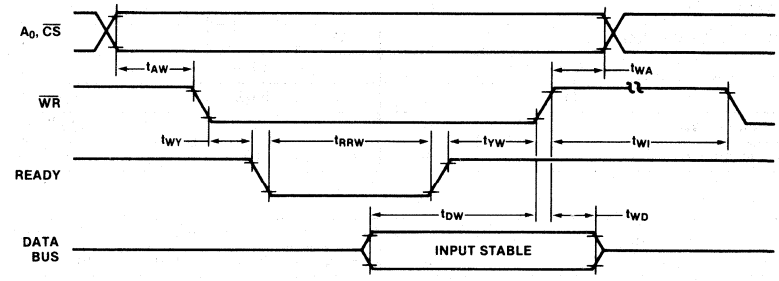

INTERRUPT OPERATION

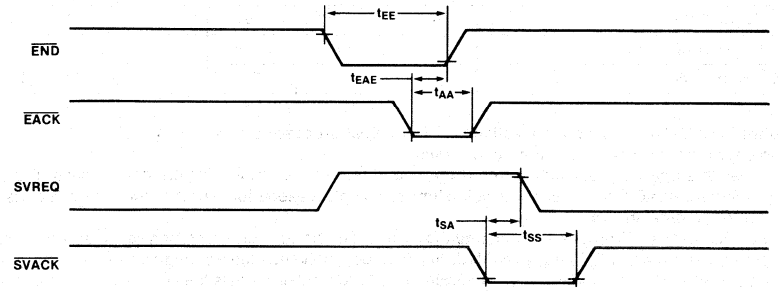

PRELIMINARY

8232
FLOATING POINT PROCESSING UNIT

- **Compatible with Proposed IEEE Format and Existing Intel Floating Point Standard**
- **Single (32-Bit) and Double (64-Bit) Precision Capability**
- **Add, Subtract, Multiply and Divide Functions**
- **Stack Oriented Operand Storage**
- **General Purpose 8-Bit Data Bus Interface**
- **Standard 24-Pin Package**
- **12V and 5V Power Supplies**
- **Compatible with MCS-80™, MCS-85™ and MCS-86™ Microprocessor Families**
- **Error Interrupt**
- **Direct Memory Access or Programmed I/O Data Transfers**
- **End of Execution Signal**
- **Advanced N-Channel Silicon Gate HMOS Technology**

The Intel® 8232 is a high performance floating-point processor unit (FPU). It provides single precision (32-bit) and double precision (64-bit) add, subtract, multiply and divide operations. The 8232's floating point arithmetic is a subset of the proposed IEEE standard. It can be easily interfaced to enhance the computational capabilities of the host microprocessor.

The operand, result, status and command information transfers take place over an 8-bit bidirectional data bus. Operands are pushed onto an internal stack by the host processor and a command is issued to perform an operation on the data stack. The results of the operation are available to the host processor from the stack.

Information transfers between the 8232 and the host processor can be handled by using programmed I/O or direct memory access techniques. After completing an operation, the 8232 activates an "end of execution" signal that can be used to interrupt the host processor.

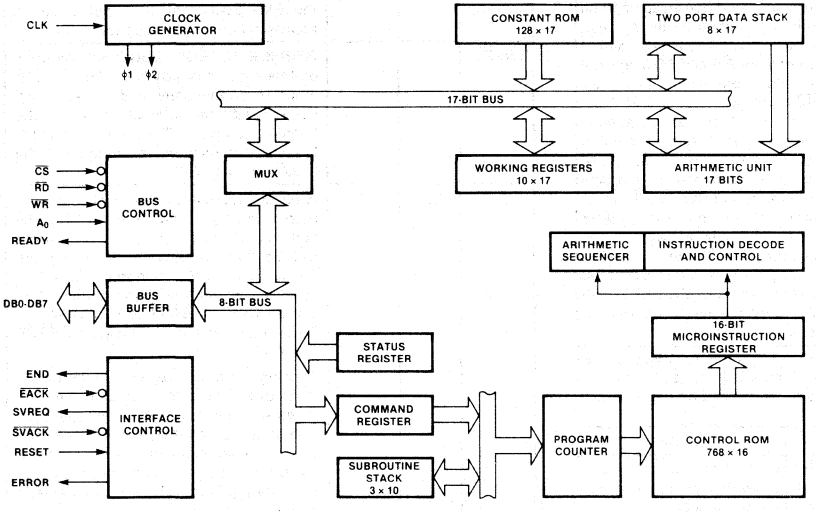

Figure 1. Block Diagram

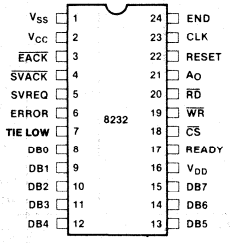

Figure 2. Pin Configuration

Table 1. Pin Description

Symbol	Pin No.	Type	Name and Description
V_{CC}	2		**POWER SUPPLY:** +5V power supply
V_{DD}	16		**POWER SUPPLY:** +12V power supply
V_{SS}	1		**GROUND**
CLK	23	I	**CLOCK:** An external timing source connected to the CLK input provides the necessary clocking.
RESET	22	I	**RESET:** A HIGH level on this input causes initialization. Reset terminates any operation in progress, and clears the status register to zero. The internal stack pointer is initialized and the contents of the stack may be affected. After a reset the END output, the ERROR output and the SVREQ output will be LOW. For proper initialization, RESET must be HIGH for at least five CLK periods following stable power supply voltages and stable clock.
$\overline{CS}$	18	I	**CHIP SELECT:** input must be LOW to accomplish any read or write operation to the 8232. To perform a write operation, appropriate data is presented on DB0 through DB7 lines, appropriate logic level on the A_0 input and the $\overline{CS}$ input is made LOW. Whenever $\overline{WR}$ and $\overline{RD}$ inputs are both HIGH and $\overline{CS}$ is LOW, READY goes LOW. However, actual writing into the 8232 cannot start until $\overline{WR}$ is made LOW. After initiating the write operation by the HIGH to LOW transition on the $\overline{WR}$ input, the READY output will go HIGH, indicating the write operation has been acknowledged. The $\overline{WR}$ input can go HIGH after READY goes HIGH. The data lines, the A_0 input and the $\overline{CS}$ input can change when appropriate hold time requirements are satisfied. See write timing diagram for details. To perform a read operation an appropriate logic level is established on the A_0 input and $\overline{CS}$ is made LOW. The READY output goes LOW because $\overline{WR}$ and $\overline{RD}$ inputs are HIGH. The read operation does not start until the $\overline{RD}$ input goes LOW. READY will go HIGH indicating that read operation is complete and the required information is available on the DB0 through DB7 lines. This information will remain on the data lines as long as $\overline{RD}$ is LOW. The $\overline{RD}$ input can return HIGH anytime after READY goes HIGH. The $\overline{CS}$ input and A_0 input can change anytime after $\overline{RD}$ returns HIGH. See read timing diagram for details. If the $\overline{CS}$ is tied LOW permanently, READY will remain LOW until the next 8232 read or write access.
A_0	21	I	**ADDRESS:** The A_0 input together with the $\overline{RD}$ and $\overline{WR}$ inputs determines the type of transfer to be performed on the data bus as follows:

A_0	$\overline{RD}$	$\overline{WR}$	Function
0	1	0	Enter data byte into stack
0	0	1	Read data byte from stack
1	1	0	Enter command
1	0	1	Read status

Symbol	Pin No.	Type	Name and Description
$\overline{RD}$	20	I	**READ:** A LOW level on this input is used to read information from an internal location and gate that information onto the data bus. The $\overline{CS}$ input must be LOW to accomplish the read operation. The A_0 input determines what internal location is to be read. See A_0, $\overline{CS}$ input descriptions and read timing diagram for details. If the END output was HIGH, performing any read operation will make the END output go LOW after the HIGH to LOW transition of the $\overline{RD}$ input (assuming $\overline{CS}$ is LOW). If the ERROR output was HIGH, performing a status register read operation will make the ERROR output LOW. This will happen after the HIGH to LOW transition of the $\overline{RD}$ input (assuming $\overline{CS}$ is LOW).
$\overline{WR}$	19	I	**WRITE:** A LOW level on this input is used to transfer information from the data bus into an internal location. The $\overline{CS}$ must be LOW to accomplish the write operation. A_0 determines which internal location is to be written. See A_0, $\overline{CS}$ input descriptions and write timing diagram for details. If the END output was HIGH, performing any write operation will make the END output go LOW after the LOW to HIGH transition of the $\overline{WR}$ input (assuming $\overline{CS}$ is LOW).
$\overline{EACK}$	3	I	**END ACKNOWLEDGE:** When LOW, makes the END output go LOW. As mentioned earlier, HIGH on the END output signals completion of a command execution. The END signal is derived from an internal flip-flop which is clocked at the completion of a command. This flip-flop is clocked to the reset state when $\overline{EACK}$ is LOW. Consequently, if $\overline{EACK}$ is tied LOW, the END output will be a pulse that is approximately one CLK period wide.
$\overline{SVACK}$	4	I	**SERVICE ACKNOWLEDGE:** A LOW level on this input clears SVREQ. If the $\overline{SVACK}$ input is permanently tied LOW, it will conflict with the internal setting of the SVREQ output. Thus, the SVREQ indication cannot be relied upon if the $\overline{SVACK}$ is tied LOW.
END	24	O	**END OF EXECUTION:** A HIGH on this output indicates that execution of the current command is complete. This output will be cleared LOW by activating the $\overline{EACK}$ input LOW or performing any read or write operation or device initialization using RESET. If $\overline{EACK}$ is tied LOW, the END output will be a pulse (see $\overline{EACK}$ description). Reading the status register while a command execution is in progress is allowed. However, any read or write operation clears the flip-flop that generates the END output. Thus, such continuous reading could conflict with internal logic setting of the END flip-flop at the end of command execution.

Table 1. Pin Description (Continued)

Symbol	Pin No.	Type	Name and Description
SVREQ	5	O	**SERVICE REQUEST:** A HIGH on this output indicates completion of a command. In this sense this output is the same as the END output. However, the SVREQ output will go HIGH at the completion of a command only when the Service Request Enable bit was set to 1. The SVREQ can be cleared (i.e., go LOW) by activating the $\overline{SVACK}$ input LOW or initializing the device using the RESET. Also, the SVREQ will be automatically cleared after completion of any command that has the service request bit as 0.
ERROR	6	O	**ERROR:** Output goes HIGH to indicate that the current command execution resulted in an error condition. The error conditions are: attempt to divide by zero, exponent overflow and exponent underflow. The ERROR output is cleared LOW on a status register read operation or upon RESET. The ERROR output is derived from the error bits in the status register. These error bits will be updated internally at an appropriate time during a command execution. Thus, ERROR output going HIGH may not coincide with the completion of a command. Reading of the status register can be performed while a command execution is in progress. However, it should be noted that reading the status register clears the ERROR output. Thus, reading the status register while a command execution is in progress may result in an internal conflict with the ERROR output.
READY	17	O	**READY:** Output is a handshake signal used while performing read or write transactions with the 8232. If the $\overline{WR}$ and $\overline{RD}$ inputs are both HIGH, the READY output goes LOW with the $\overline{CS}$ input in anticipation of a transaction. If $\overline{WR}$ goes LOW to initiate a write transaction with proper signals established on the DB0–DB7, A_0 inputs, the READY will return HIGH indicating that the write operation has been accomplished. The $\overline{WR}$ can be made HIGH after this event. On the other hand, if a read operation is desired, the $\overline{RD}$ input is made LOW after activating $\overline{CS}$ LOW and establishing proper A_0 input. (The READY will go LOW in response to $\overline{CS}$ going LOW.) The READY will return HIGH, indicating completion of read. The $\overline{RD}$ can return HIGH after this event. It should be noted that a read or write operation can be initiated without any regard to whether a command execution is in progress or not. Proper device operation is assured by obeying the READY output indication as described.
DB0–DB7	8–15	I/O	**DATA BUS:** Bidirectional lines are used to transfer command, status and operand information between the device and the host processor. DB0 is the least significant and DB7 is the most significant bit position. HIGH on a data bus line corresponds to 1 and LOW corresponds to 0. When pushing operands on the stack using the data bus, the least significant byte must be pushed first and the most significant byte last. When popping the stack to read the result of an operation, the most significant byte will be available on the data bus first and the least significant byte will be the last. Moreover, for pushing operands and popping results, the number of transactions must be equal to the proper number of bytes appropriate for the chosen format. Otherwise, the internal byte pointer will not be aligned properly. The single precision format requires 4 bytes and double precision format requires 8 bytes.

FUNCTIONAL DESCRIPTION

Major functional units of the 8232 are shown in the block diagram. The 8232 employs a microprogram controlled stack oriented architecture with 17-bit wide data paths.

The Arithmetic Unit receives one of its operands from the Operand Stack. This stack is an eight word by 17-bit two port memory with last in-first out (LIFO) attributes. The second operand to the Arithmetic Unit is supplied by the internal 17-bit bus. In addition to supplying the second operand, this bidirectional bus also carries the results from the output of the Arithmetic Unit when required. Writing into the Operand Stack takes place from this internal 17-bit bus when required. Also connected to this bus are the Constant ROM and Working Registers. The ROM provides the required constants to perform the mathematical operations while the Working Registers provide storage for the intermediate values during command execution.

Communication between the external world and the 8232 takes place on eight bidirectional input/output lines, DB0 through DB7 (Data Bus). These signals are gated to the internal 8-bit bus through appropriate interface and buffer circuitry. Multiplexing facilities exist for bidirectional communication between the internal eight

and 17-bit buses. The Status Register and Command Register are also located on the 8-bit bus.

The 8232 operations are controlled by the microprogram contained in the Control ROM. The Program Counter supplies the microprogram addresses and can be partially loaded from the Command Register. Associated with the Program Counter is the Subroutine Stack where return addresses are held during subroutine calls in the microprogram. The Microinstruction Register holds the current microinstruction being executed. The register facilitates pipelined microprogram execution. The Instruction Decode logic generates various internal control signals needed for the 8232 operation.

The Interface Control logic receives several external inputs and provides handshake related outputs to facilitate interfacing the 8232 to microprocessors.

Command Format

The operation of the 8232 is controlled from the host processor by issuing instructions called commands. The command format is shown below.

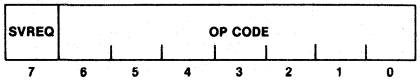

The command consists of 8 bits; the least significant 7 bits specify the operation to be performed as detailed in Table 1. The most significant bit is the Service Request Enable bit. This bit must be a 1 if SVREQ is to go HIGH at the end of executing a command.

The commands fall into three categories: single precision arithmetic, double precision arithmetic and data manipulation. There are four arithmetic operations that can be performed with single precision (32-bit) or double precision (64-bit) floating-point numbers: add, subtract, multiply and divide. These operations require two operands. The 8232 assumes that these operands are located in the internal stack as Top of Stack (TOS) and Next on Stack (NOS). The result will always be returned to the previous NOS which becomes the new TOS. Results from an operation are of the same precision and format as the operands. The results will be rounded to preserve the accuracy. The actual data formats and rounding procedures are described in a later section. In addition to the arithmetic operations, the 8232 implements eight data manipulating operations. These include changing the sign of a double or single precision operand located in TOS, exchanging single precision operands located at TOS and NOS, as well as pushing and popping single or double precision operands. See also the sections on status register and operand formats.

The execution times of the commands are all data dependent. Table 3 shows one example of each command execution time.

Operand Entry

The 8232 commands operate on the operands located at the TOS and NOS. Results are returned to the stack at NOS and then popped to TOS. The operands required for the 8232 are one of two formats — single precision floating-point (4 bytes) or double precision floating-point (8 bytes). The result of an operation has the same format as the operands. In other words, operations using single precision quantities always result in a single precision result, while operations involving double precision quantities will result in double precision result.

Operands are always entered into the stack least significant byte first and most significant byte last. The following procedure must be followed to enter operands into the stack:

1. The lower significant operand byte is established on the DB0-DB7 lines.
2. A LOW is established on the A_0 input to specify that data is to be entered into the stack.
3. The $\overline{CS}$ input is made LOW. Whenever the $\overline{WR}$ and $\overline{RD}$ inputs are HIGH, the READY output will follow the $\overline{CS}$ input. Thus, READY output will become LOW.
4. After appropriate set up time (see timing diagrams), the $\overline{WR}$ input is made LOW.
5. Sometime after this event, READY will return HIGH to indicate that the write operation has been acknowledged.
6. Any time after the READY output goes HIGH, the $\overline{WR}$ input can be made HIGH. The DB0-DB7, A_0 and $\overline{CS}$ inputs can change after appropriate hold time requirements are satisfied (see timing diagrams).

The above procedure must be repeated until all bytes of the operand are pushed into the stack. It should be noted that for single precision operands 4 bytes should be pushed and 8 bytes must be pushed for double precision. Not pushing all the bytes of a quantity will result in byte pointer misalignment.

The 8232 stack can accommodate four single precision quantities or two double precision quantities. Pushing more quantities than the capacity of the stack will result in loss of data which is usual with any LIFO stack.

The stack can be visualized as shown below:

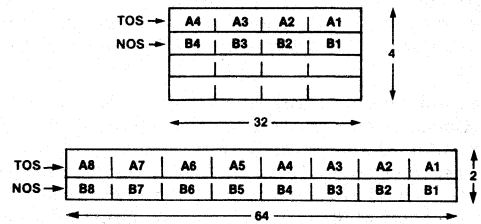

Table 2. 8232 Command Set

Single Precision Instructions

Instruction	Description	Hex[1] Code	Stack Contents[2] After Execution A B C D	Status Flags Affected[4]
SADD	Add A and B	01	R C D U	S, Z, U, V
SSUB	Subtract A from B	02	R C D U	S, Z, U, V
SMUL	Multiply A by B	03	R C D U	S, Z, U, V
SDIV	Divide B by A. If A exponent = 0, then R = B.	04	R C D U	S, Z, U, V, D
CHSS	Change sign of A[5]	05	R B C D	S, Z
PTOS	Push stack[5]	06	A* A B C	S, Z
POPS	Pop stack	07	B C D A	S, Z
XCHS	Exchange	08	B A C D	S, Z

Double Precision Instructions

Instruction	Description	Hex[1] Code	Stack Contents[3] After Execution A B	Status Flags Affected[4]
DADD	Add A and B	29	R U	S, Z, U, V
DSUB	Subtract A from B	2A	R U	S, Z, U, V
DMUL	Multiply A by B	2B	R U	S, Z, U, V
DDIV	Divide B by A. If A = 0, then R = B.	2C	R U	S, Z, U, V, D
CHSD	Change sign of A[5]	2D	R B	S, Z
PTOD	Push stack[5]	2E	A* A	S, Z
POPD	Pop stack	2F	B A	S, Z
CLR	CLR status	00	A B	

Notes:

1. In the hex code column, SVREQ bit is a 0.
2. The stack initially is composed of four 32-bit numbers (A, B, C, D). A is equivalent to Top Of Stack (TOS) and B is Next on Stack (NOS). Upon completion of a command the stack is composed of: the result (R); undefined (U); or the initial contents (A,B,C, or D).
3. The stack initially is composed of two 64-bit numbers (A, B). A is equivalent to Top Of Stack (TOS) and B is Next On Stack (NOS). Upon completion of a command the stack is composed of: the result (R); undefined (U); or the initial contents (A, B).
4. Any status bit(s) not affected are set to 0. Nomenclature: Sign (S); Zero (Z); Exponent Underflow (U); Exponent Overflow (V); Divide Exception (D).
5. If the exponent field of A is zero, R or A* will be zero.

Table 3. Execution Times

Command	TOS	NOS	Result	Clock Periods
SADD	3F800000	3F800000	40000000	58
SSUB	3F800000	3F800000	00000000	56
SMUL	40400000	3FC00000	40900000	198
SDIV	3F800000	40000000	3F000000	228
CHSS	3F800000	—	BF800000	10
PTOS	3F800000	—	—	16
POPS	3F800000	—	—	14
XCHS	3F800000	40000000	—	26
CHSD	3FF00000 00000000	—	BFF00000 00000000	24
PTOD	3FF00000 00000000	—	—	40
POPD	3FF00000 00000000	—	—	26
CLR	3FF00000 00000000	—	—	4
DADD	3FF00000 0A000000	3FF00000 00000000	3FF00000 0A000000	578
DSUB	3FF00000 A0000000	3FF00000 00000000	3FF00000 A0000000	578
DMUL	BFF80000 00000000	3FF80000 00000000	C0020000 00000000	1748
DDIV	BFF80000 00000000	3FF80000 00000000	BFF00000 00000000	4560

Note: TOS, NOS and result are in hexadecimal; clock period is in decimal.

Command Initiation

After properly positioning the required operands in the stack, a command may be issued. The procedure for initiating a command execution is the same as that described above for operand entry, except that the A_0 input is HIGH.

An attempt to issue a new command while the current command execution is in progress is allowed. Under these circumstances, the READY output will not go HIGH until the current command execution is completed.

Removing the Results

Result from an operation will be available at the TOS. Results can be transferred from the stack to the data bus by reading the stack.

When the stack is read for results, the most significant byte is available first and the least significant byte last.

A result is always of the same precision as the operands that produced it. Thus, when the result is taken from the stack, the total number of bytes popped out should be appropriate with the precision — single precision results are 4 bytes and double precision results are 8 bytes. The following procedure must be used for reading the result from the stack:

1. A LOW is established on the A_0 input.
2. The $\overline{CS}$ input is made LOW. When $\overline{WR}$ and $\overline{RD}$ inputs are both HIGH, the READY output follows the $\overline{CS}$ input, thus READY will be LOW.
3. After appropriate set up time (see timing diagrams), the $\overline{RD}$ input is made LOW.
4. Sometime after this, READY will return HIGH, indicating that the data is available on the DB0–DB7 lines. This data will remain on the DB0–DB7 lines as long as the $\overline{RD}$ input remains LOW.
5. Any time after READY goes HIGH, the $\overline{RD}$ input can return HIGH to complete the transaction.
6. The $\overline{CS}$ and A_0 inputs can change after appropriate hold time requirements are satisfied (see timing diagram).
7. Repeat this procedure until all bytes appropriate for the precision of the result are popped out.

Reading of the stack does not alter its data; it only adjusts the byte pointer. Note data must be removed in even byte multiples to avoid a byte pointer misalignment. If more data is popped than the capacity of the stack, the internal byte pointer will wrap around and older data will be read again, consistent with the LIFO stack.

Reading Status Register

The 8232 status register can be read without any regard to whether a command is in progress or not. The only implication that has to be considered is the effect this might have on the END and ERROR outputs discussed in the signal descriptions.

The following procedure must be followed to accomplish status register reading:

1. Establish HIGH on the A_0 input.
2. Establish LOW on the $\overline{CS}$ input. Whenever $\overline{WR}$ and $\overline{RD}$ inputs are HIGH, READY will follow the $\overline{CS}$ input. Thus, READY will go LOW.
3. After appropriate set up time (see timing diagram), $\overline{RD}$ is made LOW.

4. Sometime after the HIGH to LOW transition of $\overline{RD}$, READY will become HIGH, indicating that status register contents are available on the DB0-DB7 lines. These lines will contain this information as long as $\overline{RD}$ is LOW.
5. The $\overline{RD}$ input can be returned HIGH any time after READY goes HIGH.
6. The A_0 input and $\overline{CS}$ input can change after satisfying appropriate hold time requirements (see timing diagram).

Status Register

The 8232 contains an 8-bit status register with the following format:

BUSY	SIGN S	ZERO Z	RESERVED	DIVIDE EXCEPTION D	EXPONENT UNDERFLOW U	EXPONENT OVERFLOW V	RESERVED
7	6	5	4	3	2	1	0

All the bits are initialized to zero upon reset. Also, executing a CLR (Clear Status) command will result in all zero status register bits. A zero in bit 7 indicates that the 8232 is not busy and a new command may be initiated. As soon as a new command is issued, bit 7 becomes 1 to indicate the device is busy and remains 1 until the command execution is complete, at which time it will become 0. As soon as a new command is issued, status register bits 0-6 are cleared to zero. The status bits will be set as required during the command execution. Hence, as long as bit 7 is 1, the remainder of the status register bit indications should not be relied upon unless the ERROR occurs. The following is a detailed status bit description.

Bit 0 Reserved.

Bit 1 Exponent overflow (V). When 1, this bit indicates that the result exponent is more positive than +127 (+1023). The exponent is "wrapped" into the negative exponent range, skipping the end values.

Bit 2 Exponent Underflow (U). When 1, this bit indicates that the result exponent is more negative than −126 (−1022). The exponent is "wrapped" into the positive range by the number of underflow bits, skipping −127 (−1023) and +128 (+1024).

Bit 3 Divide Exception (D). When 1, this bit indicates that an attempt to divide by zero is made. Cleared to zero otherwise.

Bit 4 Reserved.

Bit 5 Zero (Z). When 1, this bit indicates that the result returned to TOS after a command is zero. Cleared to zero otherwise.

Bit 6 Sign (S). When 1, this bit indicates that the result returned to TOS is negative. Cleared to zero otherwise.

Bit 7 Busy. When 1, this bit indicates the 8232 is in the process of executing a command. It will become zero after the command execution is complete.

All other status register bits are valid when the Busy bit is zero.

Data Formats

The 8232 handles floating-point quantities in two different formats — single precision and double precision. These formats are the same as those used by Intel in other products and those proposed by the IEEE Subcommittee on floating point arithmetic.

The single precision quantities are 32 bits long, as shown below:

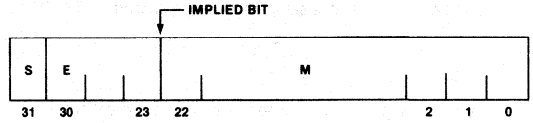

Bit 31:

S = Sign of the mantissa. One represents negative and 0 represents positive.

Bits 23-30:

E = These 8 bits represent a biased exponent. The bias is $2^7 - 1 = 127$.

Bits 0-22:

M = 23-bit mantissa. Together with the sign bit, the mantissa represents a signed fraction in sign-magnitude notation. There is an implied 1 beyond the most significant bit (bit 22) of the mantissa. In other words, the mantissa is assumed to be a 24-bit normalized quantity and the most significant bit, which will always be a 1 due to normalization, is implied. The 8232 restores this implied bit internally before performing arithmetic, normalizes the result and strips the implied bit before returning the results to the external data bus. The binary point is between the implied bit and bit 22 of the mantissa.

The quantity N represented by the above notation is

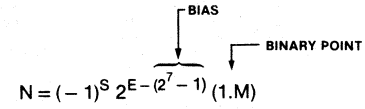

Provided E≠0 (reserved for 0) or all 1's (illegal). The approximate decimal range for this format is $\pm 1.17 \times 10^{-38}$ to $\pm 3.40 \times 10^{38}$. The format supports 7 significant decimal digits.

A double precision quantity consists of the mantissa sign bit, an 11-bit biased exponent (E), and a 52-bit mantissa (M). The bias for double precision quantities is $2^{10} - 1$. The double precision format is illustrated below.

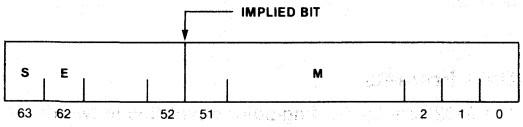

Bit 63:

S = Sign of the mantissa. One represents negative and 0 represents positive.

Bits 52-62:

E = These 11 bits represent a biased exponent. The bias is $2^{10} - 1 = 1023$.

Bits 0-51:

M = 52-bit mantissa. Together with the sign bit the mantissa represents a signed fraction in sign-magnitude notation. There is an implied 1 beyond the most significant bit (bit 51) of the mantissa. In other words, the mantissa is assumed to be a 53-bit normalized quantity and the most significant bit, which will always be a 1 due to normalization, is implied. The 8232 restores this implied bit internally before performing arithmetic, normalizes the result and strips the implied bit before returning the result to the external data bus. The binary point is between the implied bit and bit 51 of the mantissa.

The quantity N represented by the above notation is

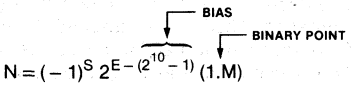

Provided E ≠ 0 (reserved for 0) or all 1s (illegal). The approximate decimal range is $\pm 2.22 \times 10^{-308}$ to $\pm 1.80 \times 10^{308}$. The format supports 16 significant decimal digits.

The following are some examples of single precision floating point representations:

Decimal	S	E	M	Binary Floating Point
0	0	0	0	0000 0000H
1	0	127	0	3F80 0000H
−1	1	127	0	BF80 0000H
255	0	134	.9922	437F 0000H
π	0	128	.5708	4049 0FDBH

Rounding

One of the main objectives in choosing the 8232's Intel/IEEE proposed floating point arithmetic was to provide maximum accuracy with no anomalies. This means that a mathematically unsophisticated user will not be "surprised" by some of the results. It is probably possible for a sophisticated user to obtain reliable results from almost any floating point arithmetic. However, in that case there will be an additional burden on the software.

The best example of what might be called the 8232's "safety factor" is the inclusion of guard bits for rounding. The absence of guard bits leads to the problem demonstrated by the following four-bit multiplication:

$$\begin{array}{l} .1111 \times 2^0 \\ .1000 \times 2^1 \\ \hline .01111000 \times 2^1 \end{array}$$

Since the last four bits are lost, the normalized result is:

$$.1110 \times 2^0$$

and the identify function is not valid. In the past this problem has been avoided (hopefully) by relying on excess precision.

Instead the 8232 uses a form of rounding known as "round to even." There are other types of rounding provided for in the proposed IEEE standard, but "round to even," an unbiased rounding scheme, is required. "Round to even" comes into play when a result is exactly halfway between two floating point numbers. In this case the arithmetic produces the "even" number, the one whose last mantissa bit is zero. The 8232 uses three additional bits—the Guard bit (G), the Rounding bit (R), and the "Sticky" bit (S)—to do the rounding. These are bits which hold data shifted out (right) of the accumulator. Rounding is carried out by the following rules, as shown in the following figure, after the result is normalized.

Bit			
G	R	S	Rule
0	0	0	No Round
0	0	1	Round Down
0	1	0	
0	1	1	
1	0	0	Round to Even
1	0	1	Round Up
1	1	0	
1	1	1	

APPLICATIONS INFORMATION

The diagram in Figure 3 represents the minimum configuration of an 8232 system. The CPU transfers data to and from the 8232 Floating Point Processor using the READY line. The 8232 status is checked using polling by the CPU.

In a high performance configuration (Figure 4), interrupts are used in place of polling. The interrupts are generated for an error condition and to signal the end of execution. Operand transfers are handled by the DMA controller.

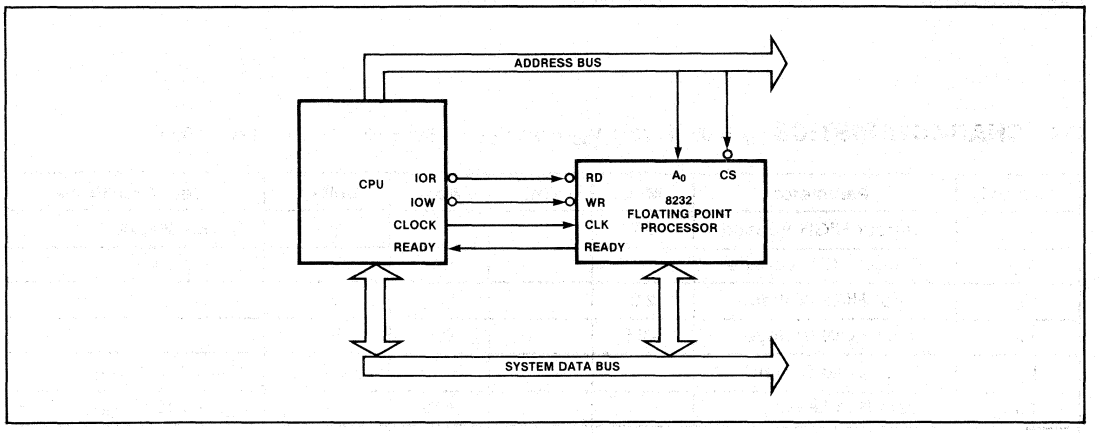

Figure 3. Minimum Configuration Example

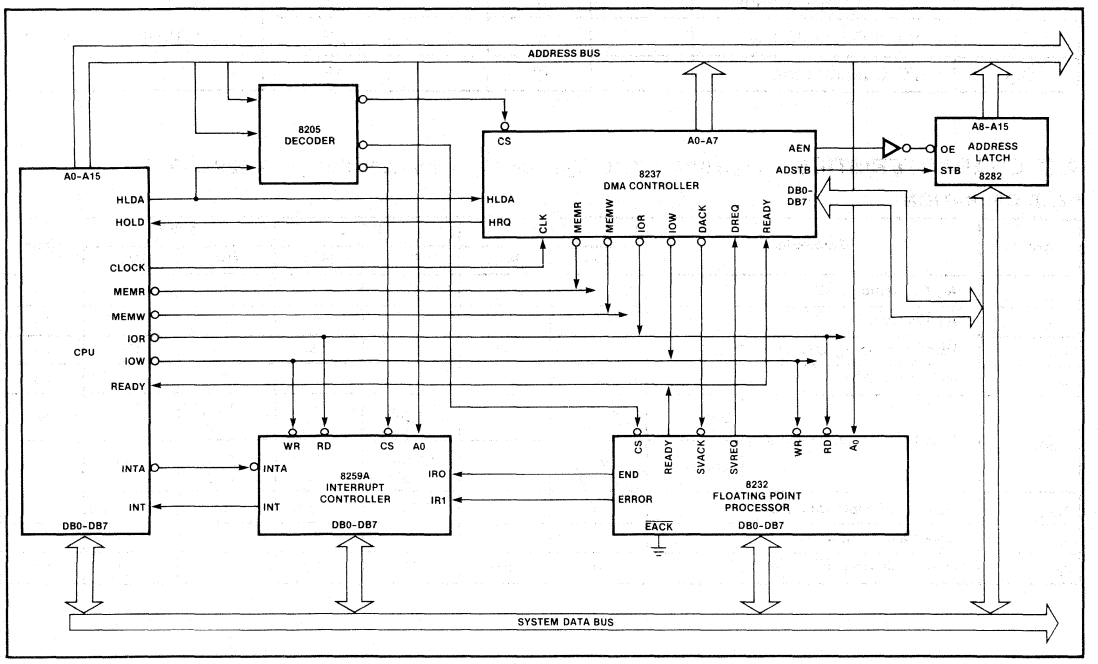

Figure 4. High Performance Configuration Example

ABSOLUTE MAXIMUM RATINGS*

Storage Temperature ..... −65°C to +150°C
Ambient Temperature Under Bias ..... 0°C to +70°C
V_{DD} with Respect to V_{SS} ..... −0.5V to +15.0V
V_{CC} with Respect to V_{SS} ..... −0.5V to +7.0V
All Signal Voltages with Respect to V_{SS} ..... −0.5V to +7.0V
Power Dissipation 2.0W

**NOTICE: Stresses above those listed under "Absolute Maximum Ratings" may cause permanent damage to the device. This is a stress rating only and functional operation of the device at these or any other conditions above those indicated in the operational sections of this specification is not implied. Exposure to absolute maximum rating conditions for extended periods may affect device reliability.*

D.C. CHARACTERISTICS (T_A = 0°C to 70°C, V_{SS} = 0V, V_{CC} = +5V ± 10%, V_{DD} = +12V ±10%)

Symbol	Parameter	Min.	Typ.	Max.	Units	Test Conditions
V_{OH}	Output HIGH Voltage	3.7			V	I_{OH} = −200 μA
V_{OL}	Output LOW Voltage			0.4	V	I_{OL} = 3.2 mA
V_{IH}	Input HIGH Voltage	2.0		V_{CC}	V	
V_{IL}	Input LOW Voltage	−0.5		0.8	V	
I_{IL}	Input Load Current			±10	μA	$V_{SS} \leq V_{IN} \leq V_{CC}$
I_{OFL}	Data Bus Leakage			±10	μA	V_{SS}, +0.45 ≤ $V_{OUT} \leq V_{CC}$
I_{CC}	V_{CC} Supply Current		50	95	mA	
I_{DD}	V_{DD} Supply Current		50	95	mA	
C_O	Output Capacitance		8		pF	f_C = 1.0 MHz, Inputs = 0V
C_I	Input Capacitance		5		pF	
C_{IO}	I/O Capacitance		10		pF	

A.C. CHARACTERISTICS (T_A = 0°C to 70°C, V_{SS} = 0V, V_{CC} = +5V ± 10%, V_{DD} = +12V ± 10%)

READ OPERATION

Symbol	Parameter		8232 Min.	8232 Max.	8232-3 Min.	8232-3 Max.	8232-8 Min.	8232-8 Max.	Units
t_{AR}	A_0, $\overline{CS}$ Setup to $\overline{RD}$		0		0		0		ns
t_{RA}	A_0, $\overline{CS}$ Hold from $\overline{RD}$		0		0		0		ns
t_{ARY}	READY↓ from A_0, $\overline{CS}$↓ Delay (Note 2)			100		100		150	ns
t_{YR}	READY↑ to $\overline{RD}$↑		0		0		0		ns
t_{RRR}	READY Pulse Width (Note 3)	Data	3.5 t_{CY} + 50		3.5 t_{CY} + 50		3.5 t_{CY} + 50		ns
		Status	1.5 t_{CY} + 50		1.5 t_{CY} + 50		1.5 t_{CY} + 50		ns
t_{RDE}	Data Bus Enable from $\overline{RD}$↓		50		50		50		ns
t_{DRY}	Data Valid to READY↑		0		0		0		ns
t_{DF}	Data Float after $\overline{RD}$↑		20	100	20	150	20	200	ns

A.C. CHARACTERISTICS (Continued)

WRITE OPERATION

Symbol	Parameter	8232		8232-3		8232-8		Units
		Min.	Max.	Min.	Max.	Min.	Max.	
t_{AW}	A_0, $\overline{CS}$ Setup to $\overline{WR}$	25		25		25		ns
t_{WA}	A_0, $\overline{CS}$ Hold after $\overline{WR}$	30		30		60		ns
t_{AWY}	READY↓ from A_0, $\overline{CS}$↓ Delay (Note 2)		100		100		150	ns
t_{YW}	READY↑ to $\overline{WR}$↑	0		0		0		ns
t_{RRW}	READY Pulse Width		t_{AW} + 50		t_{AW} + 50		t_{AW} + 50	ns
t_{DW}	Data Setup to $\overline{WR}$↑	100		100		150		ns
t_{WD}	Data Hold after $\overline{WR}$↑	20		20		20		ns

OTHER TIMINGS

Symbol	Parameter	8232		8232-3		8232-8		Units
		Min.	Max.	Min.	Max.	Min.	Max.	
t_{CY}	Clock Period	250	2500	320	3300	480	5000	ns
t_{CPH}	Clock Pulse HIGH Width	100		140		200		ns
t_{CPL}	Clock Pulse LOW Width	120		160		240		ns
t_{EE}	END Pulse Width (Note 4)	200		300		400		ns
t_{EAE}	$\overline{EACK}$↓ to END↓ Delay		150		175		200	ns
t_{AA}	$\overline{EACK}$ Pulse Width	50		75		100		ns
t_{SA}	$\overline{SVACK}$↓ to SVREQ↓ Delay		100		200		300	ns
t_{SS}	$\overline{SVACK}$ Pulse Width	50		75		100		ns

NOTES:

1. Typical values are for $T_A = 25°C$, nominal supply voltages and nominal processing parameters.
2. READY is pulled low for both command and data operations.
3. Minimum values shown assume no previously entered command is being executed for the data access. If a previously entered command is being executed, READY low pulse width is the time to complete execution plus the time shown. Status may be read at any time without exceeding the time shown.
4. END high pulse width is specified for EACK tied to V_{SS}. Otherwise t_{EAE} applies.

A.C. TESTING INPUT, OUTPUT WAVEFORM

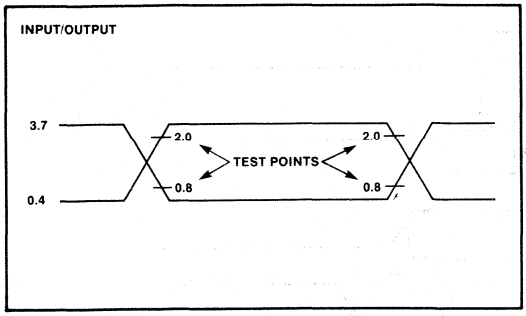

A.C. TESTING LOAD CIRCUIT

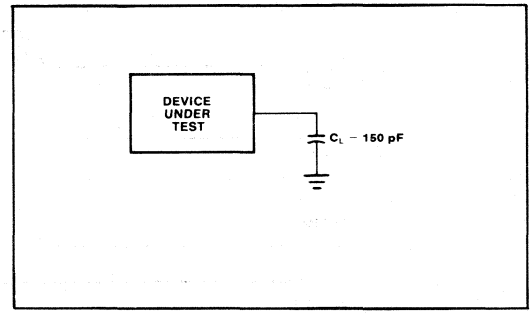

WAVEFORMS

READ OPERATION

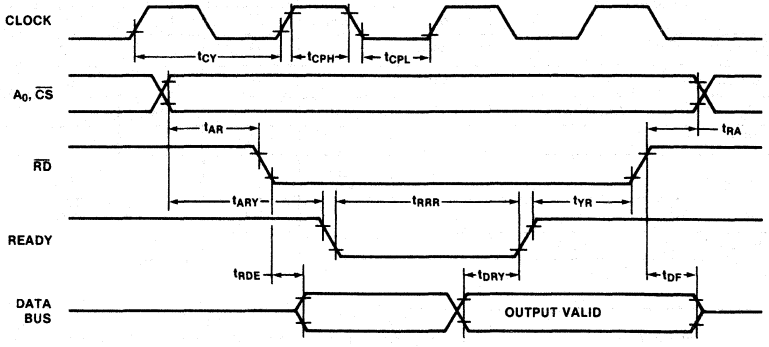

WRITE OPERATION

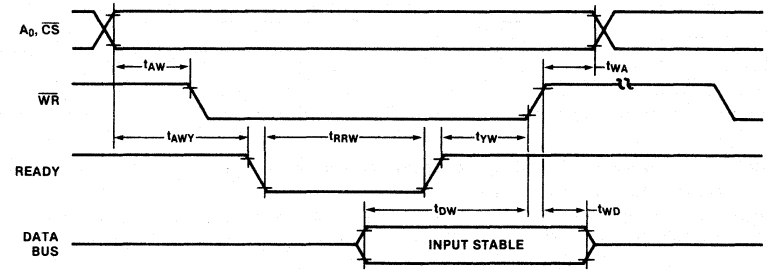

INTERRUPT OPERATION

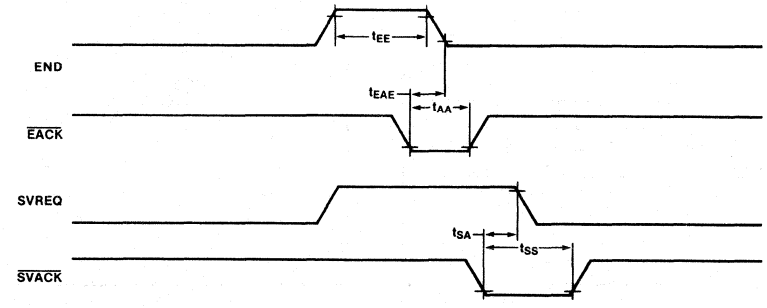

8294
DATA ENCRYPTION UNIT

- **Certified by National Bureau of Standards**
- **80 Byte/Sec Data Conversion Rate**
- **64-Bit Data Encryption Using 56-Bit Key**
- **DMA Interface**
- **3 Interrupt Outputs to Aid in Loading and Unloading Data**
- **7-Bit User Output Port**
- **Single 5V ± 10% Power Supply**
- **Peripheral to MCS-86™, MCS-85™, MCS-80™ and MCS-48™ Processors**
- **Implements Federal Information Processing Data Encryption Standard**
- **Encrypt and Decrypt Modes Available**

The Intel® 8294 Data Encryption Unit (DEU) is a microprocessor peripheral device designed to encrypt and decrypt 64-bit blocks of data using the algorithm specified in the Federal Information Processing Data Encryption Standard. The DEU operates on 64-bit text words using a 56-bit user-specified key to produce 64-bit cipher words. The operation is reversible: if the cipher word is operated upon, the original text word is produced. The algorithm itself is permanently contained in the 8294; however, the 56-bit key is user-defined and may be changed at any time.

The 56-bit key and 64-bit message data are transferred to and from the 8294 in 8-bit bytes by way of the system data bus. A DMA interface and three interrupt outputs are available to minimize software overhead associated with data transfer. Also, by using the DMA interface two or more DEUs may be operated in parallel to achieve effective system conversion rates which are virtually any multiple of 80 bytes/second. The 8294 also has a 7-bit TTL compatible output port for user-specified functions.

Because the 8294 implements the NBS encryption algorithm it can be used in a variety of Electronic Funds Transfer applications as well as other electronic banking and data handling applications where data must be encrypted.

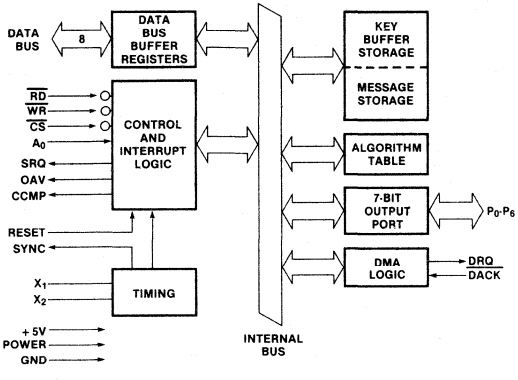

Figure 1. Block Diagram

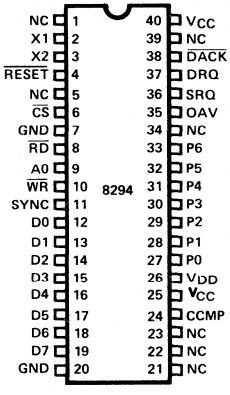

Figure 2. Pin Configuration

Table 1. Pin Description

Symbol	Pin No.	Type	Name and Function
NC	1		**No Connection.**
X1 X2	2 3	I	**Crystal:** Inputs for crystal, L-C or external timing signal to determine internal oscillator frequency.
$\overline{RESET}$	4	I	**Reset:** A low signal to this pin resets the 8294.
NC	5		**No Connection:** No connection or tied high.
$\overline{CS}$	6	I	**Chip Select:** A low signal to this pin enables reading and writing to the 8294.
GND	7		**Ground:** This pin must be tied to ground.
$\overline{RD}$	8	I	**Read:** An active low read strobe at this pin enables the CPU to read data and status from the internal DEU registers.
A_0	9	I	**Address:** Address input used by the CPU to select DEU registers during read and write operations.
$\overline{WR}$	10	I	**Write:** An active low write strobe at this pin enables the CPU to send data and commands to the DEU.
SYNC	11	O	**Sync:** High frequency (Clock ÷ 15) output. Can be used as a strobe for external circuitry.
D_0 D_1 D_2 D_3 D_4 D_5 D_6 D_7	12 13 14 15 16 17 18 19	I/O	**Data Bus:** Three-state, bi-directional data bus lines used to transfer data between the CPU and the 8294.
GND	20		**Ground:** This pin must be tied to ground.
V_{CC}	40		**Power:** +5 volt power input: +5V ± 10%.

Symbol	Pin No.	Type	Name and Function
NC	39		**No Connection.**
$\overline{DACK}$	38	I	**DMA Acknowledge:** Input signal from the 8257 DMA Controller acknowledging that the requested DMA cycle has been granted.
DRQ	37	O	**DMA Request:** Output signal to the 8257 DMA Controller requesting a DMA cycle.
SRQ	38	O	**Service Request:** Interrupt to the CPU indicating that the 8294 is awaiting data or commands at the input buffer. SRQ=1 implies IBF=0.
OAV	35	O	**Output Available:** Interrupt to the CPU indicating that the 8294 has data or status available in its output buffer. OAV=1 implies OBF=1.
NC	34		**No Connection.**
P6 P5 P4 P3 P2 P1 P0	33 32 31 30 29 28 27	O	**Output Port:** User output port lines. Output lines available to the user via a CPU command which can assert selected port lines. These lines have nothing to do with the encryption function. At power-on, each line is in a 1 state.
V_{DD}	26		**Power:** +5V power input. (+5V ±10%) Low power standby pin.
V_{CC}	25		**Power:** Tied high.
CCMP	24	O	**Conversion Complete:** Interrupt to the CPU indicating that the encryption/decryption of an 8-byte block is complete.
NC	23		**No Connection.**
NC	22		**No Connection.**
NC	21		**No Connection.**

FUNCTIONAL DESCRIPTION

OPERATION

The data conversion sequence is as follows:

1. A Set Mode command is given, enabling the desired interrupt outputs.
2. An Enter New Key command is issued, followed by 8 data inputs which are retained by the DEU for encryption/decryption. Each byte must have odd parity.
3. An Encrypt Data or Decrypt Data command sets the DEU in the desired mode.

After this, data conversions are made by writing 8 data bytes and then reading back 8 converted data bytes. Any of the above commands may be issued between data conversions to change the basic operation of the DEU; e.g., a Decrypt Data command could be issued to change the DEU from encrypt mode to decrypt mode without changing either the key or the interrupt outputs enabled.

INTERNAL DEU REGISTERS

Four internal registers are addressable by the master processor: 2 for input, and 2 for output. The following table describes how these registers are accessed.

$\overline{RD}$	$\overline{WR}$	$\overline{CS}$	A_0	Register
1	0	0	0	Data input buffer
0	1	0	0	Data output buffer
1	0	0	1	Command input buffer
0	1	0	1	Status output buffer
X	X	1	X	Don't care

The functions of each of these registers are described below.

Data Input Buffer — Data written to this register is interpreted in one of three ways, depending on the preceding command sequence.

1. Part of a key.
2. Data to be encrypted or decrypted.
3. A DMA block count.

Data Output Buffer — Data read from this register is the output of the encryption/decryption operation.

Command Input Buffer — Commands to the DEU are written into this register. (See command summary below.)

Status Output Buffer — DEU status is available in this register at all times. It is used by the processor for poll-driven command and data transfer operations.

STATUS BIT:	7	6	5	4	3	2	1	0
FUNCTION:	X	X	X	KPE	CF	DEC	IBF	OBF

OBF Output Buffer Full; OBF = 1 indicates that output from the encryption/decryption function is available in the Data Output Buffer. It is reset when the data is read.

IBF Input Buffer Full; A write to the Data Input Buffer or to the Command Input Buffer sets IBF = 1. The DEU resets this flag when it has accepted the input byte. Nothing should be written when IBF = 1.

DEC Decrypt; indicates whether the DEU is in an encrypt or a decrypt mode. DEC = 1 implies the decrypt mode. DEC = 0 implies the encrypt mode.

CF Completion Flag; This flag may be used to indicate any or all of three events in the data transfer protocol.

1. It may be used in lieu of a counter in the processor routine to flag the end of an 8-byte transfer.
2. It must be used to indicate the validity of the KPE flag.
3. It may be used in lieu of the CCMP interrupt to indicate the completion of a DMA operation.

KPE Key Parity Error; After a new key has been entered, the DEU uses this flag in conjunction with the CF flag to indicate correct or incorrect parity.

COMMAND SUMMARY

1 — Enter New Key

OP CODE: 0 1 0 0 0 0 0 0

MSB LSB

This command is followed by 8 data byte inputs which are retained in the key buffer (RAM) to be used in encrypting and decrypting data. These data bytes must have odd parity represented by the LSB.

2 — Encrypt Data

OP CODE: 0 0 1 1 0 0 0 0

MSB LSB

This command puts the 8294 into the encrypt mode.

3 — Decrypt Data

OP CODE: 0 0 1 0 0 0 0 0

MSB LSB

This command puts the 8294 into the decrypt mode.

4 — Set Mode

OP CODE: 0 0 0 0 A B C D

MSB LSB

where:

A is the OAV (Output Available) interrupt enable
B is the SRQ (Service Request) interrupt enable
C is the DMA (Direct Memory Access) transfer enable
D is the CCMP (Conversion Complete) interrupt enable

This command determines which interrupt outputs will be enabled. A "1" in bits A, B, or D will enable the OAV, SRQ, or CCMP interrupts respectively. A "1" in bit C will allow DMA transfers. When bit C is set the OAV and SRQ interrupts should also be enabled (bits A,B = 1). Following the command in which bit C, the DMA bit, is set, the 8294 will expect one data byte to specify the number of 8-byte blocks to be converted using DMA.

5 — Write to Output Port

OP CODE:

1	P_6	P_5	P_4	P_3	P_2	P_1	P_0
MSB							LSB

This command causes the 7 least significant bits of the command byte to be latched as output data on the 8294 output port. The initial output data is 1111111. Use of this port is independent of the encryption/decryption function.

PROCESSOR/DEU INTERFACE PROTOCOL

ENTERING A NEW KEY

The timing sequence for entering a new key is shown in Figure 3. A flowchart showing the CPU software to accommodate this sequence is given in Figure 4.

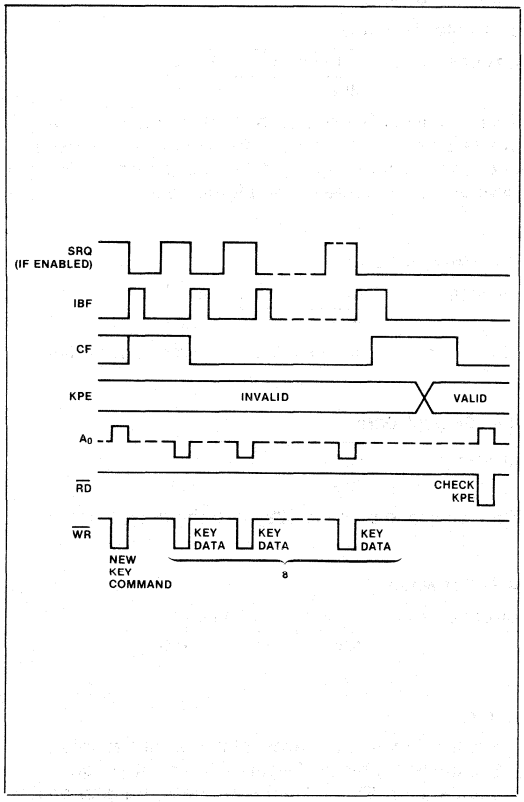

Figure 3. Entering a New Key

After the Enter New Key command is issued, 8 data bytes representing the new key are written to the data input buffer (most significant byte first). After the eighth byte is accepted by the DEU, CF goes true (CF = 1). The CF bit goes false again when KPE is valid. The CPU can then check the KPE flag. If KPE = 1, a parity error has been detected and the DEU has not accepted the key. Each byte is checked for odd parity, where the parity bit is the LSB of each byte.

Since the CF bit is used in this protocol to indicate the validity of the KPE flag, it may not be used to flag the end of the 8 byte key entry. CF = 1 only as long as KPE is invalid. Therefore, the CPU might not detect that CF = 1 and the key entry is complete before KPE becomes valid. Thus, a counter should be used, as in Figure 4, to flag the end of the new key entry. Then, CF is used to indicate a valid KPE flag.

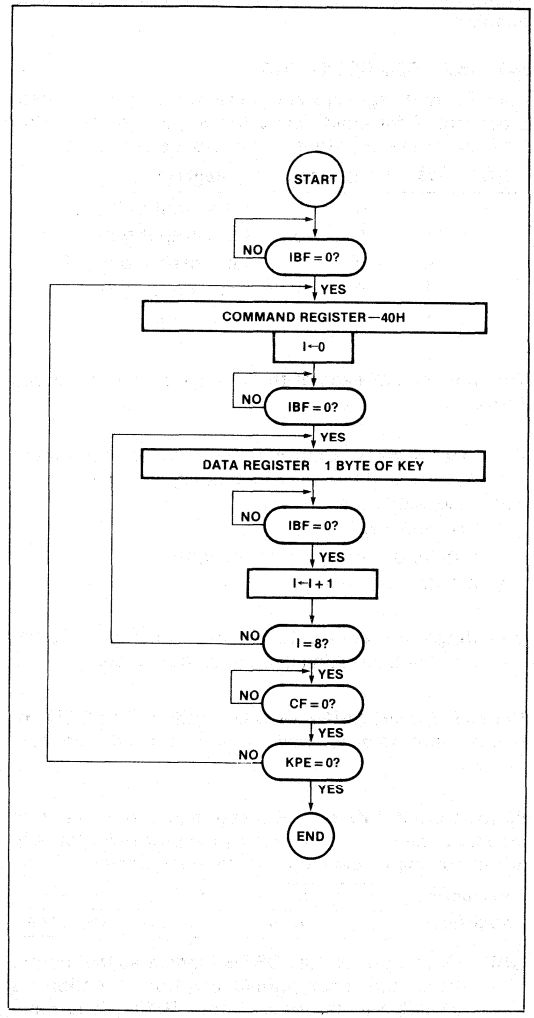

Figure 4. Flowchart for Entering a New Key

ENCRYPTING OR DECRYPTING DATA

Figure 5 shows the timing sequence for encrypting or decrypting data. The CPU writes 8 data bytes to the DEU's data input buffer for encryption/decryption. CF then goes true (CF = 1) to indicate that the DEU has accepted the 8-byte block. Thus, the CPU may test for IBF = 0 and CF = 1 to terminate the input mode, or it may use a software counter. When the encryption/-decryption is complete, the CCMP and OAV interrupts are asserted and the OBF flag is set true (OBF = 1). OAV and OBF are set false again after each of the converted data bytes is read back by the CPU. The CCMP interrupt is set false, and remains false, after the first read. After 8 bytes have been read back by the CPU, CF goes false (CF = 0). Thus, the CPU may test for CF = 0 to terminate the read mode. Also, the CCMP interrupt may be used to initiate a service routine which performs the next series of 8 data reads and 8 data writes.

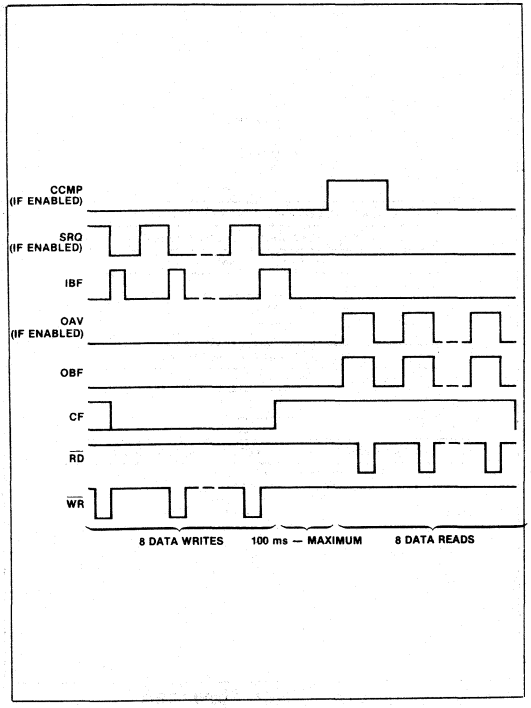

Figure 5. Encrypting/Decrypting Data

Figure 6 offers two flowcharts outlining the alternative means of implementing the data conversion protocol. Either the CF flag or a software counter may be used to end the read and write modes.

SRQ = 1 implies IBF = 0, OAV = 1 implies OBF = 1. This allows interrupt routines to do data transfers without checking status first. However, the OAV service routine must detect and flag the end of a data conversion.

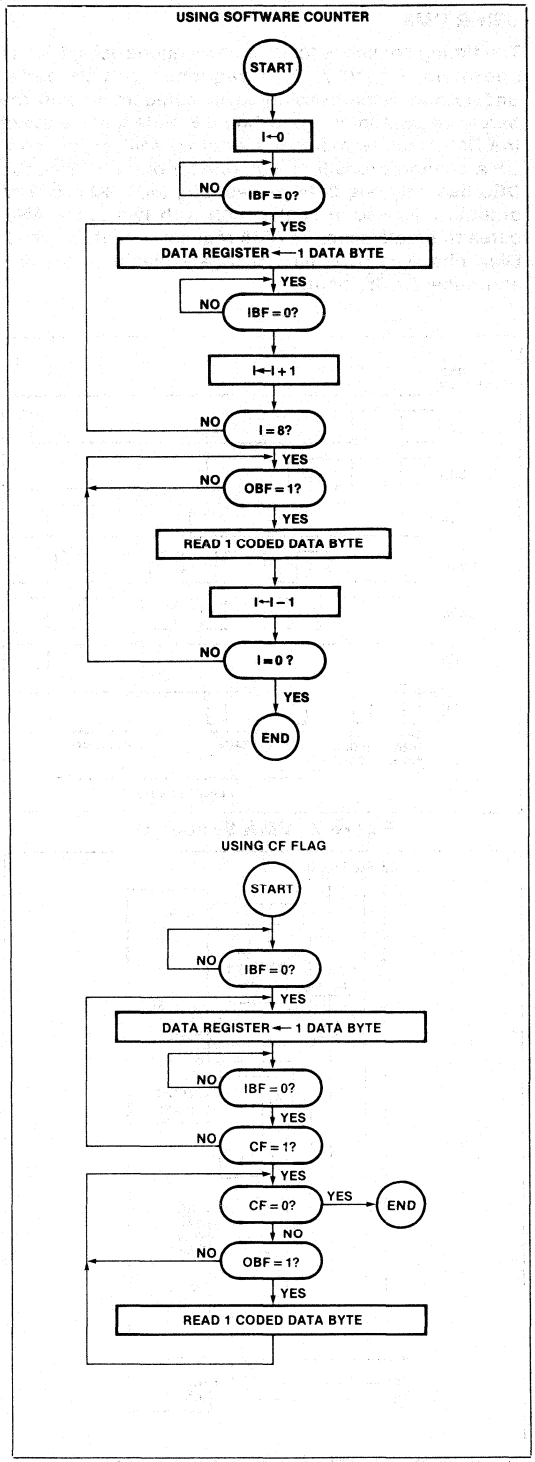

Figure 6. Data Conversion Flowcharts

USING DMA

The timing sequence for data conversions using DMA is shown in Figure 7. This sequence can be better understood when considered in conjunction with the hardware DMA interface in Figure 8. Note that the use of the DMA feature requires 3 external AND gates and 2 DMA channels (one for input, one for output). Since the DEU has only one DMA request pin, the SRQ and OAV outputs are used in conjunction with two of the AND gates to create separate DMA request outputs for the 2 DMA channels. The third AND gate combines the two active-low $\overline{DACK}$ inputs.

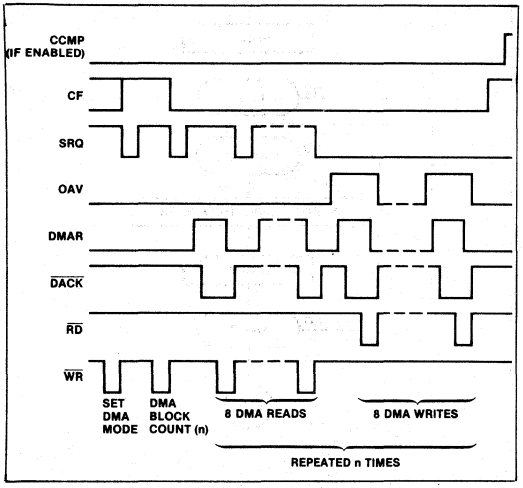

Figure 7. DMA Sequence

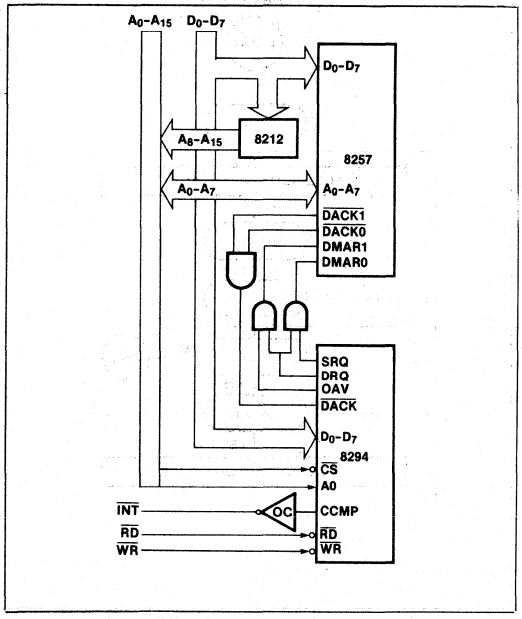

Figure 8. DMA Interface

To initiate a DMA transfer, the CPU must first initialize the two DMA channels as shown in the flowchart in Figure 9. It must then issue a Set Mode command to the DEU enabling the OAV, SRQ, and DMA outputs. The CCMP interrupt may be enabled or disabled, depending on whether that output is desired. Following the Set Mode command, there must be a data byte giving the number of 8-byte blocks of data (n<256) to be converted. The DEU then generates the required number of DMA requests to the 2 DMA channels with no further CPU intervention. When the requested number of blocks has been converted, the DEU will set CF and assert the CCMP interrupt (if enabled). CCMP then goes false again with the next write to the DEU (command or data). Upon completion of the conversion, the DMA mode is disabled and the DEU returns to the encrypt/decrypt mode. The enabled interrupt outputs, however, will remain enabled until another Set Mode command is issued.

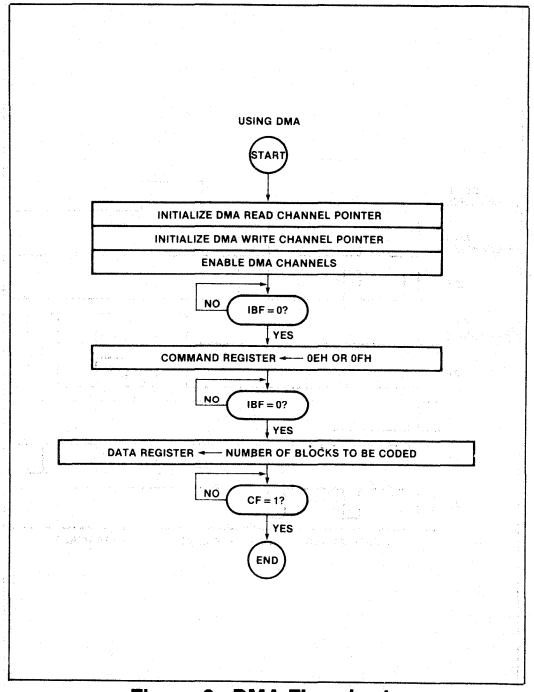

Figure 9. DMA Flowchart

SINGLE BYTE COMMANDS

Figure 10 shows the timing and protocol for single byte commands. Note that any of the commands is effective as a pacify command in that they may be entered at any time, except during a DMA conversion. The DEU is thus set to a known state. However, if a command is issued out of sequence, an additional protocol is required (Figure 11). The CPU must wait until the command is accepted (IBF = 0). A data read must then be issued to clear anything the preceding command sequence may have left in the Data Output Buffer.

CPU/DEU INTERFACES

Figures 12 through 15 illustrate four interface configurations used in the CPU/DEU data transfers. In all cases SRQ will be true (if enabled) and IBF will be false when the DEU is ready to accept data or commands.

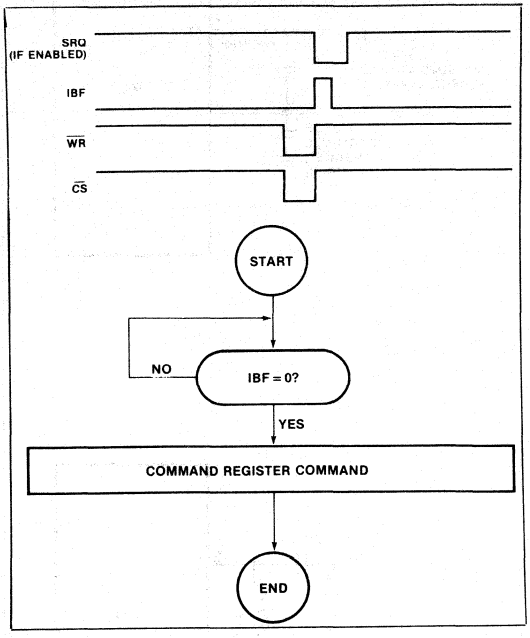

Figure 10. Single Byte Commands

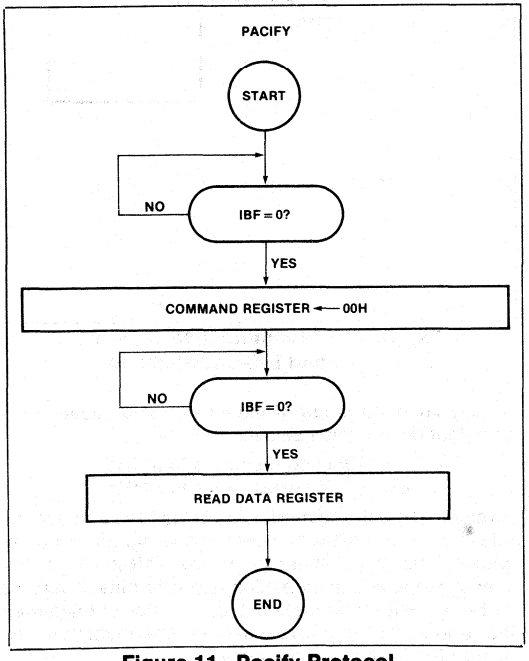

Figure 11. Pacify Protocol

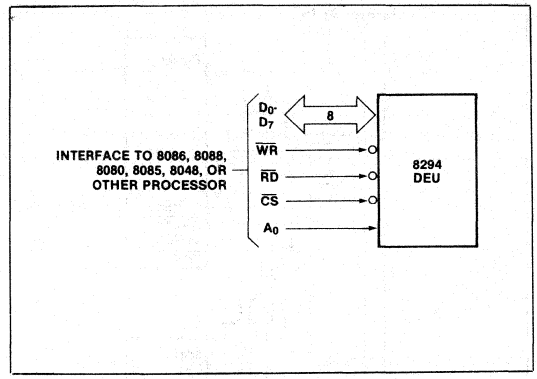

Figure 12. Polling Interface

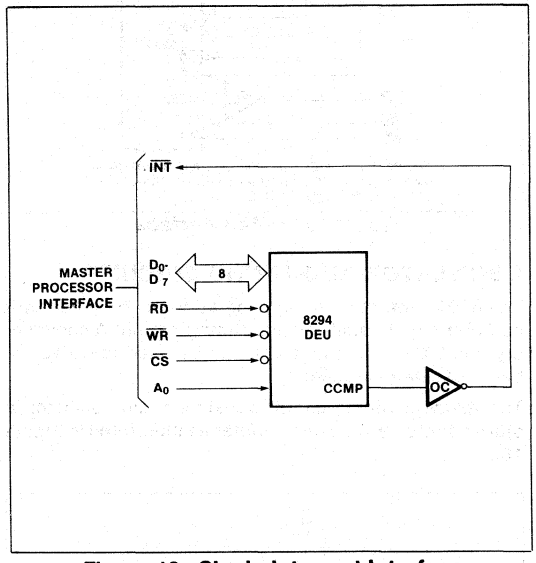

Figure 13. Single Interrupt Interface

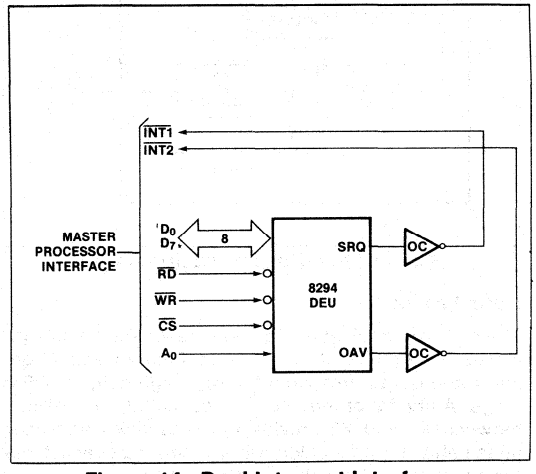

Figure 14. Dual Interrupt Interface

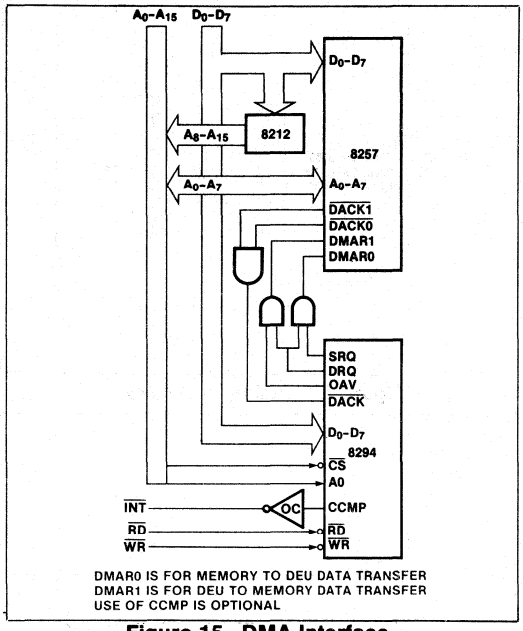

Figure 15. DMA Interface

OSCILLATOR AND TIMING CIRCUITS

The 8294's internal timing generation is controlled by a self-contained oscillator and timing circuit. A choice of crystal, L-C or external clock can be used to derive the basic oscillator frequency.

The resident timing circuit consists of an oscillator, a state counter and a cycle counter as illustrated in Figure 16.

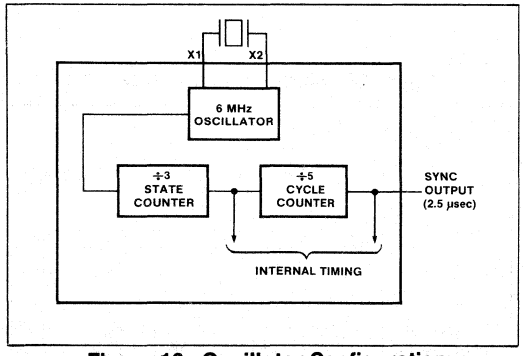

Figure 16. Oscillator Configuration

OSCILLATOR

The on-board oscillator is a series resonant circuit with a frequency range of 1 to 6 MHz. Pins X1 and X2 are input and output (respectively) of a high gain amplifier stage. A crystal or inductor and capacitator connected between X1 and X2 provide the feedback and proper phase shift for oscillation. Recommended connections for crystal or L-C are shown in Figure 17.

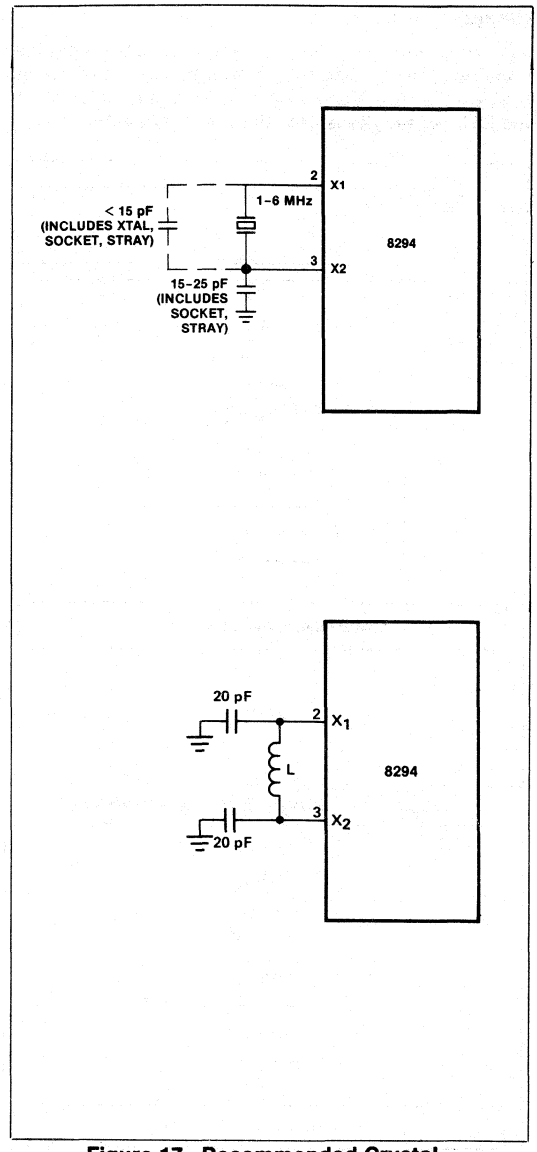

Figure 17. Recommended Crystal and L-C Connections

A recommended range of inductance and capacitance combinations is given below:

L = 120 μH corresponds to 3 MHz
L = 45 μH corresponds to 5 MHz

An external clock signal can also be used as a frequency reference to the 8294; however, the levels are *not* compatible. The signal must be in the 1 MHz-6 MHz frequency range and must be connected to pins X1 and X2 by buffers with a suitable pull-up resistor to guarantee that a logic "1" is above 3.8 volts. The recommended connection is shown in Figure 18.

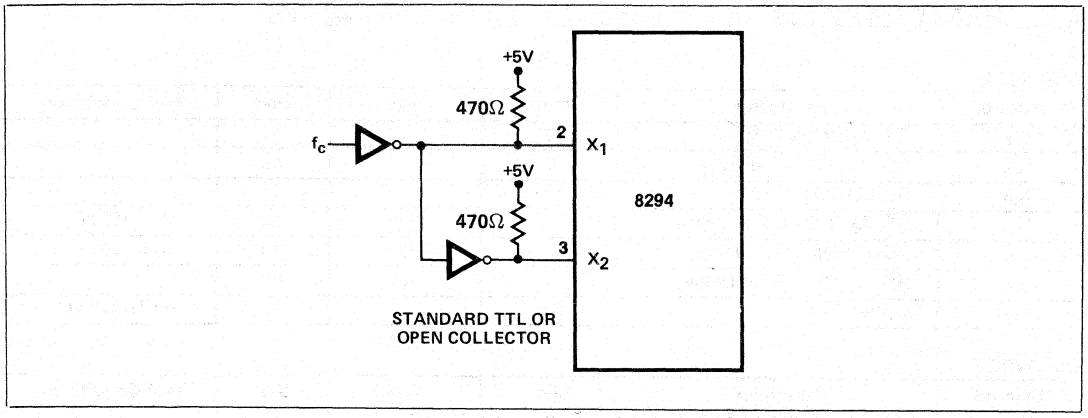

Figure 18. Recommended Connection for External Clock Signal

ABSOLUTE MAXIMUM RATINGS*

Ambient Temperature Under Bias ..... 0°C to 70°C
Storage Temperature ..... −65°C to +150°C
Voltage on Any Pin With
Respect to Ground ..... −0.5V to +7V
Power Dissipation ..... 1.5 Watt

**NOTICE: Stresses above those listed under "Absolute Maximum Ratings" may cause permanent damage to the device. This is a stress rating only and functional operation of the device at these or any other conditions above those indicated in the operational sections of this specification is not implied. Exposure to absolute maximum rating conditions for extended periods may affect device reliability.*

D.C. AND OPERATING CHARACTERISTICS (T_A = 0°C to 70°C, V_{CC} = +5V ± 10%, V_{SS} = 0V)

Symbol	Parameter	Limits			Unit	Test Conditions
		Min.	Typ.	Max.		
V_{IL}	Input Low Voltage (All Except X_1, X_2, $\overline{RESET}$)	−0.5		0.8	V	
V_{IL1}	Input Low Voltage (X_1, X_2, $\overline{RESET}$)	−0.5		0.6	V	
V_{IH}	Input High Voltage (All Except X_1, X_2, $\overline{RESET}$)	2.2		V_{CC}	V	
V_{IH1}	Input High Voltage (X_1, X_2, $\overline{RESET}$)	3.8		V_{CC}	V	
V_{OL}	Output Low Voltage (D_0-D_7)			0.45	V	I_{OL} = 2.0 mA
V_{OL1}	Output Low Voltage (All Other Outputs)			0.45	V	I_{OL} = 1.6 mA
V_{OH}	Output High Voltage (D_0-D_7)	2.4			V	I_{OH} = −400 μA
V_{OH1}	Output High Voltage (All Other Outputs)	2.4			V	I_{OH} = −50 μA
I_{IL}	Input Leakage Current ($\overline{RD}$, $\overline{WR}$, $\overline{CS}$, $\overline{A_0}$)			±10	μA	$V_{SS} \leq V_{IN} \leq V_{CC}$
I_{OFL}	Output Leakage Current (D_0-D_7, High Z State)			±10	μA	V_{SS} +0.45 ≤ $V_{OUT} \leq V_{CC}$
I_{DD}	V_{DD} Supply Current		5	15	mA	
$I_{DD} + I_{CC}$	Total Supply Current		60	125	mA	
I_{LI}	Low Input Load Current (Pins 24, 27-38)			0.5	mA	V_{IL} = 0.8 V
I_{LI1}	Low Input Load Current ($\overline{RESET}$)			0.2	mA	V_{IL} = 0.8 V
I_{IH}	Input High Leakage Current (Pins 24, 27-38)			100	μA	$V_{IN} = V_{CC}$
C_{IN}	Input Capacitance			10	pF	
$C_{I/O}$	I/O Capacitance			20	pF	

A.C. CHARACTERISTICS (T_A = 0°C to 70°C, V_{CC} = V_{DD} = +5V ± 10%, V_{SS} = 0V)

DBB READ

Symbol	Parameter	Min.	Max.	Unit	Test Conditions
t_{AR}	$\overline{CS}$, A_0 Setup to $\overline{RD}$ ↓	0		ns	
t_{RA}	$\overline{CS}$, A_0 Hold After $\overline{RD}$ ↑	0		ns	
t_{RR}	$\overline{RD}$ Pulse Width	250		ns	
t_{AD}	$\overline{CS}$, A_0 to Data Out Delay		225	ns	C_L = 150 pF
t_{RD}	$\overline{RD}$ ↓ to Data Out Delay		225	ns	C_L = 150 pF
t_{DF}	$\overline{RD}$ ↑ to Data Float Delay		100	ns	
t_{CY}	Cycle Time	2.5	15	μs	6 MHz Crystal

DBB WRITE

Symbol	Parameter	Min.	Max.	Unit	Test Conditions
t_{AW}	$\overline{CS}$, A_0 Setup to $\overline{WR}$ ↓	0		ns	
t_{WA}	$\overline{CS}$, A_0 Hold After $\overline{WR}$ ↑	0		ns	
t_{WW}	$\overline{WR}$ Pulse Width	250		ns	
t_{DW}	Data Setup to $\overline{WR}$ ↑	150		ns	
t_{WD}	Data Hold to $\overline{WR}$ ↑	0		ns	

DMA AND INTERRUPT TIMING

Symbol	Parameter	Min.	Max.	Unit	Test Conditions
t_{ACC}	$\overline{DACK}$ Setup to Control	0		ns	
t_{CAC}	$\overline{DACK}$ Hold After Control	0		ns	
t_{ACD}	$\overline{DACK}$ to Data Valid		225	ns	C_L = 150 pF
t_{CRQ}	Control L.E. to DRQ T.E.		200	ns	
t_{CI}	Control T.E. to Interrupt T.E.		t_{CY} + 500	ns	

A.C. TESTING INPUT, OUTPUT WAVEFORM

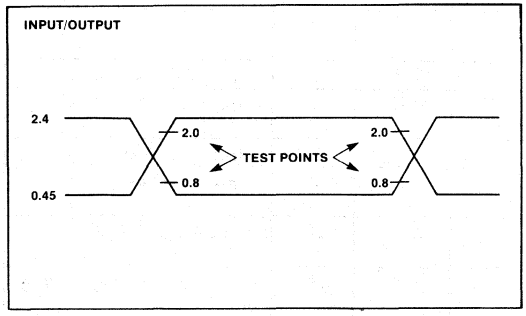

A.C. TESTING LOAD CIRCUIT

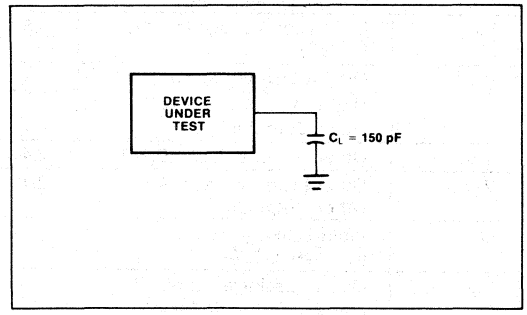

WAVEFORMS

READ OPERATION—OUTPUT BUFFER REGISTER

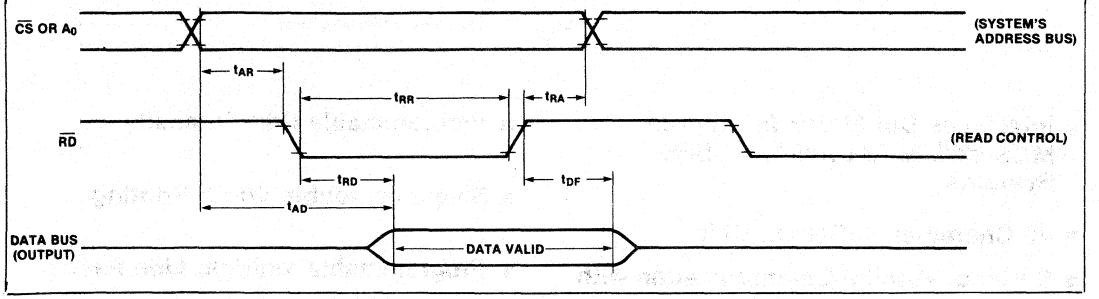

WRITE OPERATION—INPUT BUFFER REGISTER

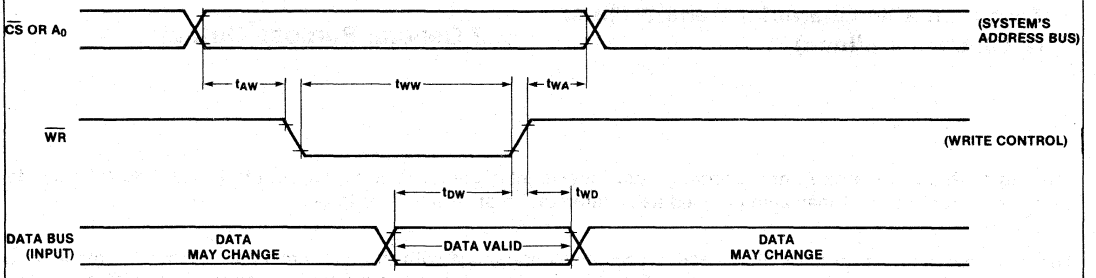

DMA AND INTERRUPT TIMING

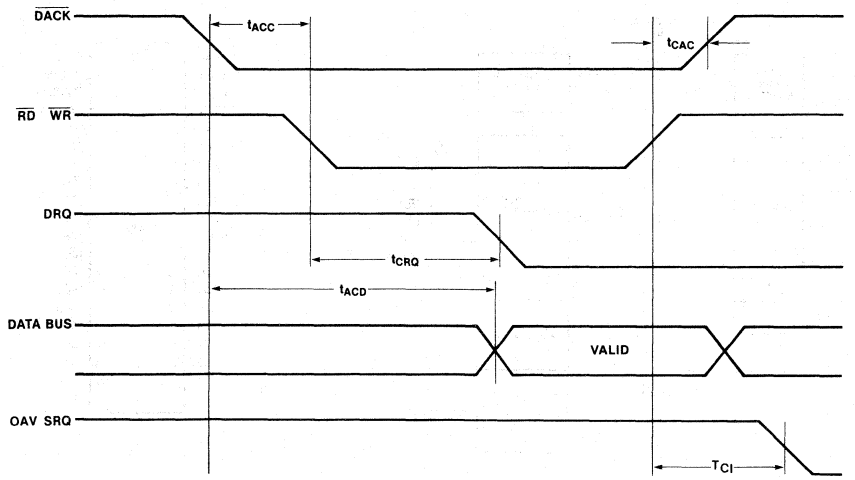

8295
DOT MATRIX PRINTER CONTROLLER

- **Interfaces Dot Matrix Printers to MCS-48™, MCS-80/85™, MCS-86™ Systems**
- **40 Character Buffer On Chip**
- **Serial or Parallel Communication with Host**
- **DMA Transfer Capability**
- **Programmable Character Density (10 or 12 Chararcters/Inch)**
- **Programmable Print Intensity**
- **Single or Double Width Printing**
- **Programmable Multiple Line Feeds**
- **3 Tabulations**
- **2 General Purpose Outputs**

The Intel® 8295 Dot Matrix Printer Controller provides an interface for microprocessors to the LRC 7040 Series dot matrix impact printers. It may also be used as an interface to other similar printers.

The chip may be used in a serial or parallel communication mode with the host processor. In parallel mode, data transfers are based on polling, interrupts, or DMA. Furthermore, it provides internal buffering of up to 40 characters and contains a 7 x 7 matrix character generator accommodating 64 ASCII characters.

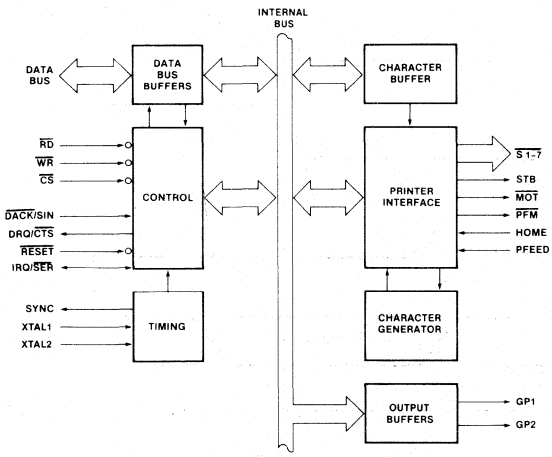

Figure 1. Block Diagram

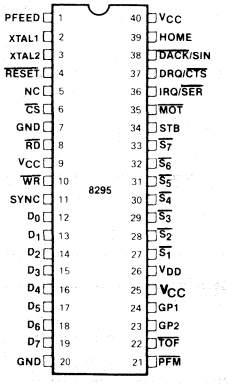

Figure 2. Pin Configuration

Table 1. Pin Description

Symbol	Pin No.	Type	Name and Function
PFEED	1	I	**Paper Feed:** Paper feed input switch.
XTAL1 XTAL2	2 3	I	**Crystal:** Inputs for a crystal to set internal oscillator frequency. For proper operation use 6 MHz crystal.
$\overline{RESET}$	4	I	**Reset:** Reset input, active low. After reset the 8295 will be set for 12 characters/inch single width printing, solenoid strobe at 320 msec.
NC	5		**No Connection:** No connection or tied high.
$\overline{CS}$	6	I	**Chip Select:** Chip select input used to enable the RD and WR inputs except during DMA.
GND	7		**Ground:** This pin must be tied to ground.
$\overline{RD}$	8	I	**Read:** Read input which enables the master CPU to read data and status. In the serial mode this pin must be tied to V_{CC}.
V_{CC}	9		**Power:** +5 volt power input: +5V ± 10%.
$\overline{WR}$	10	I	**Write:** Write input which enables the master CPU to write data and commands to the 8295. In the serial mode this pin must be tied to V_{SS}.
SYNC	11	O	**Sync:** 2.5 μs clock output. Can be used as a strobe for external circuitry.
D_0 D_1 D_2 D_3 D_4 D_5 D_6 D_7	12 13 14 15 16 17 18 19	I/O	**Data Bus:** Three-state bidirectional data bus buffer lines used to interface the 8295 to the host processor in the parallel mode. In the serial mode D_0—D_2 sets up the baud rate.
GND	20		**Ground:** This pin must be tied to ground.
V_{CC}	40		**Power:** +5 volt power input: +5 ± 10%.

Symbol	Pin No.	Type	Name and Function
HOME	39	I	**Home:** Home input switch, used by the 8295 to detect that the print head is in the home position.
$\overline{DACK}$/SIN	38	I	**DMA Acknowledge/Serial Input:** In the parallel mode used as DMA acknowledgment; in the serial mode, used as input for data.
DRQ/$\overline{CTS}$	37	O	**DMA Request/Clear to Send:** In the parallel mode used as DMA request output pin to indicate to the 8257 that a DMA transfer is requested; in the serial mode used as clear-to-send signal.
IRQ/$\overline{SER}$	36	O	**Interrupt Request/Serial Mode:** In parallel mode it is an interrupt request input to the master CPU; in serial mode it should be strapped to V_{SS}.
$\overline{MOT}$	35	O	**Motor:** Main motor drive, active low.
STB	34	O	**Solenoid Strobe:** Solenoid strobe output. Used to determine duration of solenoids activation.
$\overline{S_7}$ $\overline{S_6}$ $\overline{S_5}$ $\overline{S_4}$ $\overline{S_3}$ $\overline{S_2}$ $\overline{S_1}$	33 32 31 30 29 28 27	O	**Solenoid:** Solenoid drive outputs; active low.
V_{DD}	26		**Power:** +5V power input (+5V ± 10%). Low power standby pin.
V_{CC}	25		**Power:** Tied high.
GP1 GP2	24 23	O O	**General Purpose:** General purpose output pins.
$\overline{TOF}$	22	I	**Top of Form:** Top of form input, used to sense top of form signal for type T printer.
$\overline{PFM}$	21	O	**Paper Feed Motor Drive:** Paper feed motor drive, active low.

FUNCTIONAL DESCRIPTION

The 8295 interfaces microcomputers to the LRC 7040 Series dot matrix impact printers, and to other similar printers. It provides internal buffering of up to 40 characters. Printing begins automatically when the buffer is full or when a carriage return character is received. It provides a modified 7x7 matrix character generator. The character set includes 64 ASCII characters.

Communication between the 8295 and the host processor can be implemented in either a serial or parallel mode. The parallel mode allows for character transfers into the buffer via DMA cycles. The serial mode features selectable data rates from 110 to 4800 baud.

The 8295 also offers two general purpose output pins which can be set or cleared by the host processor. They can be used with various printers to implement such functions as ribbon color selection, enabling form release solenoid, and reverse document feed.

COMMAND SUMMARY

Hex Code	Description
00	Set GP1. This command brings the GP1 pin to a logic high state. After power on it is automatically set high.
01	Set GP2. Same as the above but for GP2.
02	Clear GP1. Sets GP1 pin to logic low state, inverse of command 00.
03	Clear GP2. Same as above but for GP2. Inverse command 01.
04	Software Reset. This is a pacify command. This command is not effective immediately after commands requiring a parameter, as the Reset command will be interpreted as a parameter.
05	Print 10 characters/in. density.
06	Print 12 characters/in. density.
07	Print double width characters. This command prints characters at twice the normal width, that is, at either 17 or 20 characters per line.
08	Enable DMA mode; must be followed by two bytes specifying the number of data characters to be fetched. Least significant byte accepted first.
09	Tab character.
0A	Line feed.
0B	Multiple Line Feed; must be followed by a byte specifying the number of line feeds.
0C	Top of Form. Enables the line feed output until the Top of Form input is activated.
0D	Carriage Return. Signifies end of a line and enables the printer to start printing.
0E	Set Tab #1, followed by tab position byte.
0F	Set Tab #2, followed by tab position byte. Should be greater than Tab #1.
10	Set Tab #3, followed by tab position byte. Should be greater than Tab #2.
11	Print Head Home on Right. On some printers the print head home position is on the right. This command would enable normal left to right printing with such printers.
12	Set Strobe Width; must be followed by strobe width selection byte. This command adjusts the duration of the strobe activation.

PROGRAMMABLE PRINTING OPTIONS

CHARACTER DENSITY

The character density is programmable at 10 or 12 characters/inch (32 or 40 characters/line). The 8295 is automatically set to 12 characters/inch at power-up. Invoking the Print Double-Width command halves the character density (5 or 6 characters/inch). The 10 char/in or 12 char/in command must be re-issued to cancel the Double-Width mode. Different character density modes may not be mixed within a single line of printing.

PRINT INTENSITY

The intensity of the printed characters is determined by the amount of time during which the solenoid is on. This on-time is programmable via the Set Strobe-Width command. A byte following this command sets the solenoid on-time according to Table 2. Note that only the three least significant bits of this byte are important.

Table 2. Solenoid On-Time

D7—D3	D2	D1	D0	Solenoid On (microsec)
x	0	0	0	200
x	0	0	1	240
x	0	1	0	280
x	0	1	1	320
x	1	0	0	360
x	1	0	1	400
x	1	1	0	440
x	1	1	1	480

TABULATIONS

Up to three tabulation positions may be specified with the 8295. The column position of each tabulation is selected by issuing the Set Tab commands, each fol-

lowed by a byte specifying the column. The tab positions will then remain valid until new Set Tab commands are issued.

Sending a tab character (09H) will automatically fill the character buffer with blanks up to the next tab position. The character sent immediately after the tab character will thus be stored and printed at that position.

CPU TO 8295 INTERFACE

Communication between the CPU and the 8295 may take place in either a serial or parallel mode. However, the selection of modes is inherent in the system hardware; it is not software programmable. Thus, the two modes cannot be mixed in a single 8295 application.

PARALLEL INTERFACE

Two internal registers on the 8295 are addressable by the CPU: one for input, one for output. The following table describes how these registers are accessed.

$\overline{RD}$	$\overline{WR}$	$\overline{CS}$	Register
1	0	0	Input Data Register
0	1	0	Output Status Register

Input Data Register—Data written to this register is interpreted in one of two ways, depending on how the data is coded.

1. A command to be executed (0XH or 1XH).
2. A character to be stored in the character buffer for printing (2XH, 3XH, 4XH, or 5XH). See the character set, Table 2.

Output Status Register—8295 status is available in this register at all times.

STATUS BIT:	7	6	5	4	3	2	1	0
FUNCTION:	x	x	PA	DE	x	x	IBF	x

PA—Parameter Required; PA = 1 indicates that a command requiring a parameter has been received. After the necessary parameters have been received by the 8295, the PA flag is cleared.

DE—DMA Enabled; DE = 1 whenever the 8295 is in DMA mode. Upon completion of the required DMA transfers, the DE flag is cleared.

IBF—Input Buffer Full; IBF = 1 whenever data is written to the Input Data Register. No data should be written to the 8295 when IBF = 1.

A flow chart describing communication with the 8295 is shown in Figure 3.

The interrupt request output (IRQ, Pin 36) is available on the 8295 for interrupt driven systems. This output is asserted true whenever the 8295 is ready to receive data.

To improve bus efficiency and CPU overhead, data may be transferred from main memory to the 8295 via DMA cycles. Sending the Enable DMA command (08H) activates the DMA channel of the 8295. This command must be followed by two bytes specifying the length of the data string to be transferred (least significant byte first). The 8295 will then assert the required DMA requests to the 8257 DMA controller without further CPU intervention. Figure 4 shows a block diagram of the 8295 in DMA mode.

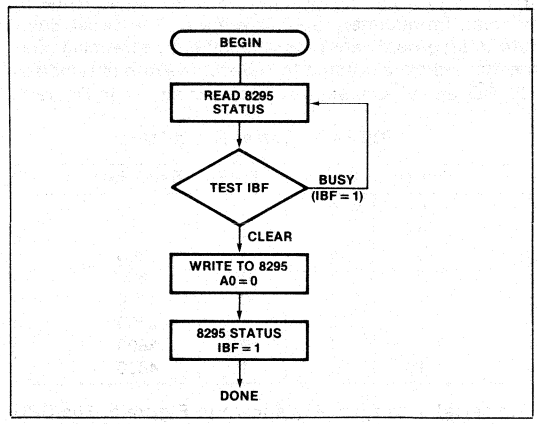

Figure 3. Host to 8295 Protocol Flowchart

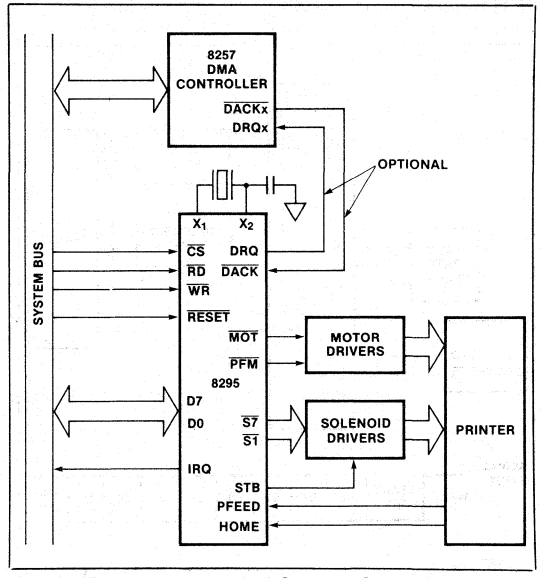

Figure 4. Parallel System Interface

Data transferred in the DMA mode may be either commands or characters or a mixture of both. The procedure is as follows:

1. Set up the 8257 DMA controller channel by sending a starting address and a block length.
2. Set up the 8295 by issuing the "Enable DMA" command (08H) followed by two bytes specifying the block length (least significant byte first).

The DMA enabled flag (DE) will be true until the assigned data transfer is completed. Upon completion of the transfer, the flag is cleared and the interrupt request (IRQ) signal is asserted. The 8295 then returns to the non-DMA mode of operation.

SERIAL INTERFACE

The 8295 may be hardware programmed to operate in a serial mode of communication. By connecting the IRQ/$\overline{SER}$ pin (pin 36) to logic zero, the serial mode is enabled immediately upon power-up. The serial Baud rate is also hardware programmable; by strapping pins 14, 13, and 12 according to Table 3, the rate is selected. $\overline{CS}$, $\overline{RD}$, and $\overline{WR}$ must be strapped as shown in Figure 5.

Table 3. Serial Baud Rate

Pin 14	Pin 13	Pin 12	Baud Rate
0	0	0	110
0	0	1	150
0	1	0	300
0	1	1	600
1	0	0	1200
1	0	1	2400
1	1	0	4800
1	1	1	4800

The serial data format is shown in Figure 5. The CPU should wait for a clear to send signal ($\overline{CTS}$) from the 8295 before sending data.

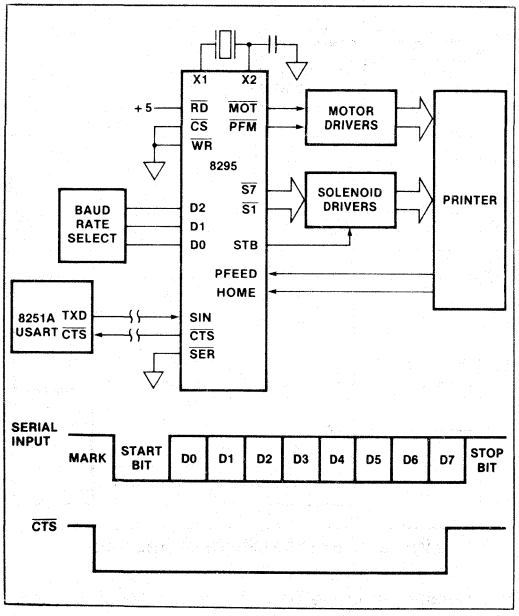

Figure 5. Serial Interface to UART (8251A)

8295 TO PRINTER INTERFACE

The strobe output signal of the 8295 determines the duration of the solenoid outputs, which hold the data to the printer. These solenoid outputs cannot drive the printer solenoids directly. They should be buffered through solenoid drivers as shown in Figure 6. Recommended solenoid and motor driver circuits may be found in the printer manufacturer's interface guide.

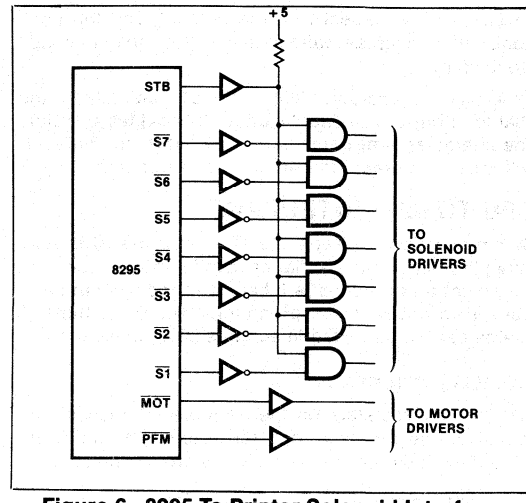

Figure 6. 8295 To Printer Solenoid Interface

OSCILLATOR AND TIMING CIRCUITS

The 8295's internal timing generation is controlled by a self-contained oscillator and timing circuit. A 6 MHz crystal is used to derive the basic oscillator frequency. The resident timing circuit consists of an oscillator, a state counter and a cycle counter as illustrated in Figure 7. The recommended crystal connection is shown in Figure 8.

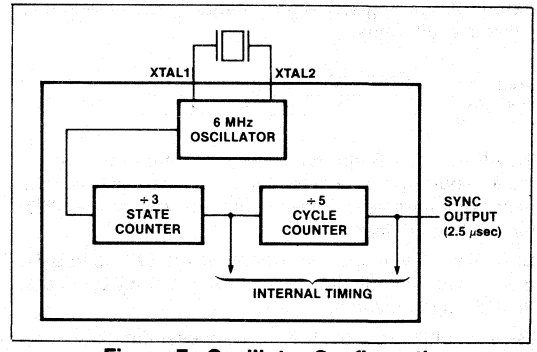

Figure 7. Oscillator Configuration

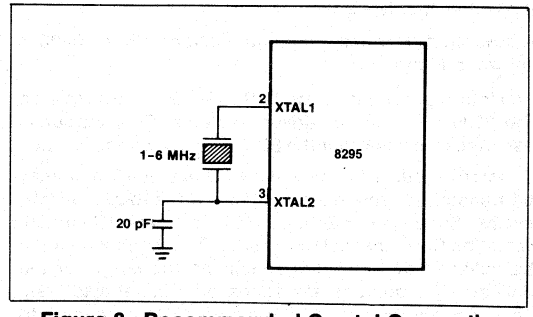

Figure 8. Recommended Crystal Connection

8295 CHARACTER SET

Hex Code	Print Char.	Hex Code	Print Char.	Hex Code	Print Char.	Hex Code	Print Char.
20	space	30	0	40	@	50	P
21	!	31	1	41	A	51	Q
22	"	32	2	42	B	52	R
23	#	33	3	43	C	53	S
24	$	34	4	44	D	54	T
25	%	35	5	45	E	55	U
26	&	36	6	46	F	56	V
27	'	37	7	47	G	57	W
28	(	38	8	48	H	58	X
29	)	39	9	49	I	59	Y
2A	*	3A	:	5A	J	5A	Z
2B	+	3B	;	4B	K	5B	[
2C	,	3C	<	4C	L	5C	\
2D	-	3D	=	4D	M	5D	]
2E	.	3E	>	4E	N	5E	↑
2F	/	3F	?	4F	O	5F	—

ABSOLUTE MAXIMUM RATINGS*

Ambient Temperature Under Bias . . . . . 0°C to 70°C
Storage Temperature . . . . . −65° to +150°C
Voltage on Any Pin With
Respect to Ground . . . . . −0.5V to +7V
Power Dissipation . . . . . 1.5 Watt

**NOTICE: Stresses above those listed under "Absolute Maximum Ratings" may cause permanent damage to the device. This is a stress rating only and functional operation of the device at these or any other conditions above those indicated in the operational sections of this specification is not implied. Exposure to absolute maximum rating conditions for extended periods may affect device reliability.*

D.C. AND OPERATING CHARACTERISTICS (T_A = 0°C to 70°C, V_{CC} = V_{DD} = +5V ± 10%, V_{SS} = 0V)

Symbol	Parameter	Limits			Unit	Test Conditions
		Min.	Typ.	Max.		
V_{IL}	Input Low Voltage (All Except X_1, X_2, $\overline{RESET}$)	−0.5		0.8	V	
V_{IL1}	Input Low Voltage (X_1, X_2, $\overline{RESET}$)	−0.5		0.6	V	
V_{IH}	Input High Voltage (All Except X_1, X_2, $\overline{RESET}$)	2.2		V_{CC}	V	
V_{IH1}	Input High Voltage (X_1, X_2, $\overline{RESET}$)	3.8		V_{CC}	V	
V_{OL}	Output Low Voltage (D_0-D_7)			0.45	V	I_{OL} = 2.0 mA
V_{OL1}	Output Low Voltage (All Other Outputs)			0.45	V	I_{OL} = 1.6 mA
V_{OH}	Output High Voltage (D_0-D_7)	2.4			V	I_{OH} = −400 μA
V_{OH1}	Output High Voltage (All Other Outputs)	2.4			V	I_{OH} = −50 μA
I_{IL}	Input Leakage Current ($\overline{RD}$, $\overline{WR}$, $\overline{CS}$, $\overline{A_0}$)			±10	μA	$V_{SS} \leq V_{IN} \leq V_{CC}$
I_{OFL}	Output Leakage Current (D_0-D_7, High Z State)			±10	μA	V_{SS}+0.45 ≤ $V_{OUT} \leq V_{CC}$
I_{DD}	V_{DD} Supply Current		5	15	mA	
$I_{DD} + I_{CC}$	Total Supply Current		60	125	mA	
I_{LI}	Low Input Load Current (Pins 24, 27-38)			0.5	mA	V_{IL} = 0.8V
I_{LI1}	Low Input Load Current ($\overline{RESET}$)			0.2	mA	V_{IL} = 0.8V
I_{IH}	Input High Leakage Current (Pins 22, 38)			100	μA	V_{IN} = V_{CC}
C_{IN}	Input Capacitance			10	pF	
$C_{I/O}$	I/O Capacitance			20	pF	

A.C. CHARACTERISTICS (T_A = 0°C to 70°C, V_{CC} = V_{DD} = +5V ± 10%, V_{SS} = 0V)

DBB READ

Symbol	Parameter	Min.	Max.	Unit	Test Conditions
t_{AR}	$\overline{CS}$, A_0 Setup to $\overline{RD}$ ↓	0		ns	
t_{RA}	$\overline{CS}$, A_0 Hold After $\overline{RD}$ ↑	0		ns	
t_{RR}	$\overline{RD}$ Pulse Width	250		ns	
t_{AD}	$\overline{CS}$, A_0 to Data Out Delay		225	ns	C_L = 150 pF
t_{RD}	$\overline{RD}$ ↓ to Data Out Delay		225	ns	C_L = 150 pF
t_{DF}	$\overline{RD}$ ↑ to Data Float Delay		100	ns	
t_{CY}	Cycle Time	2.5	15	μs	

DBB WRITE

Symbol	Parameter	Min.	Max.	Unit	Test Conditions
t_{AW}	$\overline{CS}$, A_0 Setup to $\overline{WR}$ ↓	0		ns	
t_{WA}	$\overline{CS}$, A_0 Hold After $\overline{WR}$ ↑	0		ns	
t_{WW}	$\overline{WR}$ Pulse Width	250		ns	
t_{DW}	Data Setup to $\overline{WR}$ ↑	150		ns	
t_{WD}	Data Hold to $\overline{WR}$ ↑	0		ns	

DMA AND INTERRUPT TIMING

Symbol	Parameter	Min.	Max.	Unit	Test Conditions
t_{ACC}	$\overline{DACK}$ Setup to Control	0		ns	
t_{CAC}	$\overline{DACK}$ Hold After Control	0		ns	
t_{CRQ}	$\overline{WR}$ to DRQ Cleared		200	ns	
t_{ACD}	$\overline{DACK}$ to Data Valid		225	ns	C_L = 150 pF

A.C. TESTING INPUT, OUTPUT WAVEFORM

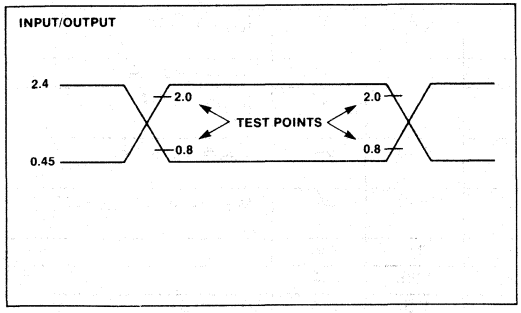

A.C. TESTING LOAD CIRCUIT

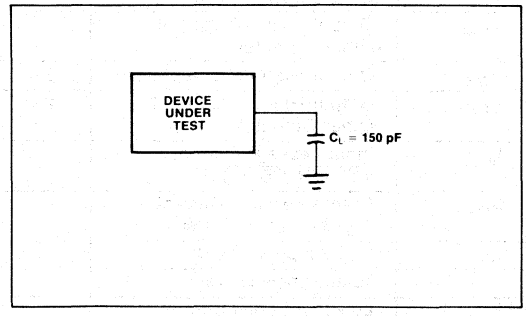

WAVEFORMS

READ OPERATION—OUTPUT BUFFER REGISTER

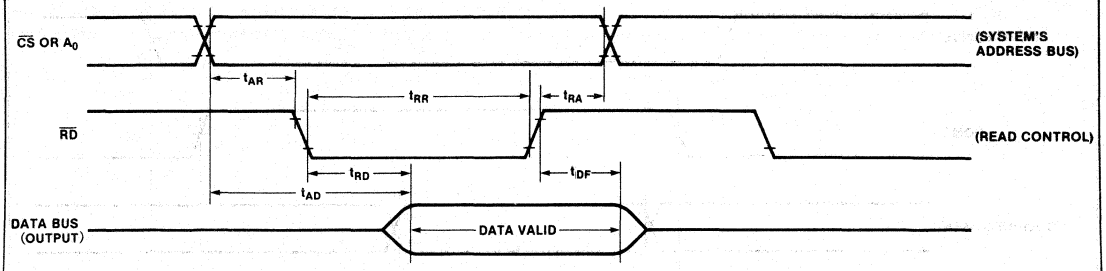

WRITE OPERATION—INPUT BUFFER REGISTER

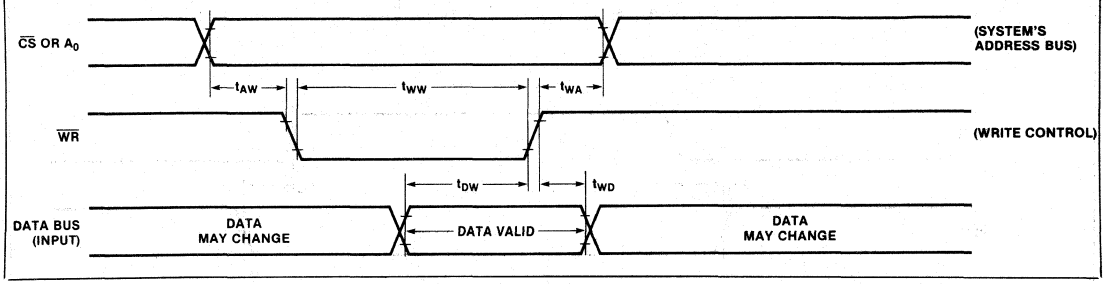

DMA AND INTERRUPT TIMING

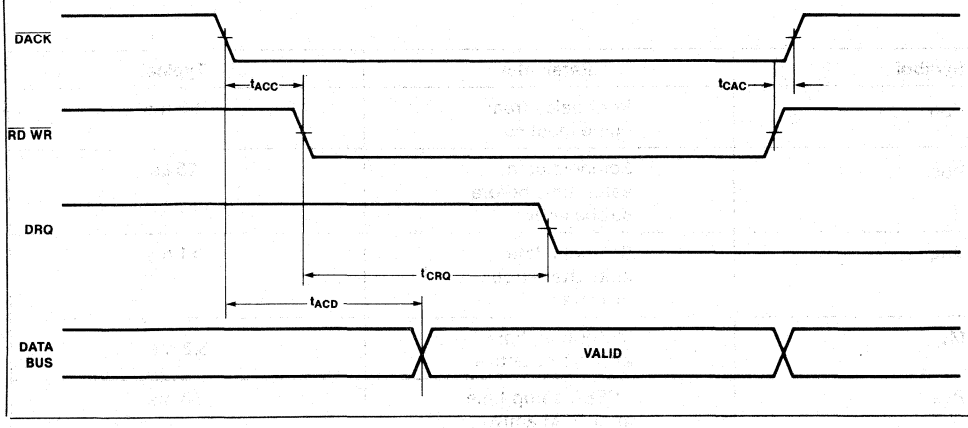

WAVEFORMS (Continued)

PRINTER INTERFACE TIMING

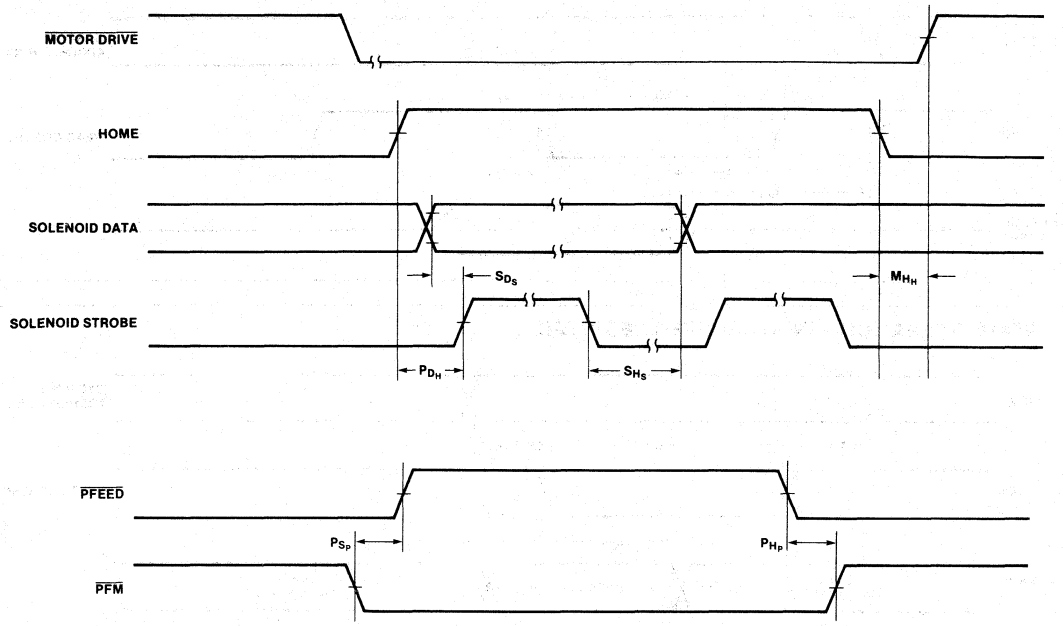

Symbol	Parameter	Typical
P_{DH}	Print delay from home inactive	1.8 ms
S_{DS}	Solenoid data setup time before strobe active	25 μs
S_{HS}	Solenoid data hold after strobe inactive	>1 ms
M_{HA}	Motor hold time after home active	3.2 ms
P_{SP}	PFEED setup time after PFM active	58 ms
P_{HP}	PFM hold time after PFEED active	9.75 ms

8202A
DYNAMIC RAM CONTROLLER

- **Provides All Signals Necessary to Control 2104A, 2117, or 2118 Dynamic Memories**
- **Directly Addresses and Drives Up to 64K Bytes Without External Drivers**
- **Provides Address Multiplexing and Strobes**
- **Provides a Refresh Timer and a Refresh Counter**
- **Refresh Cycles May be Internally or Externally Requested**
- **Provides Transparent Refresh Capability**
- **Fully Compatible with Intel® 8080A, 8085A, iAPX 88, and iAPX 86 Family Microprocessors**
- **Decodes CPU Status for Advanced Read Capability**
- **Provides System Acknowledge and Transfer Acknowledge Signals**
- **Internal Clock Capability with the 8202A-1 or 8202A-3**

The Intel® 8202A is a Dynamic Ram System Controller designed to provide all signals necessary to use 2104A, 2117, or 2118 Dynamic RAMs in microcomputer systems. The 8202A provides multiplexed addresses and address strobes, as well as refresh/access arbitration. The 8202A-1 or 8202A-3 support an internal crystal oscillator.

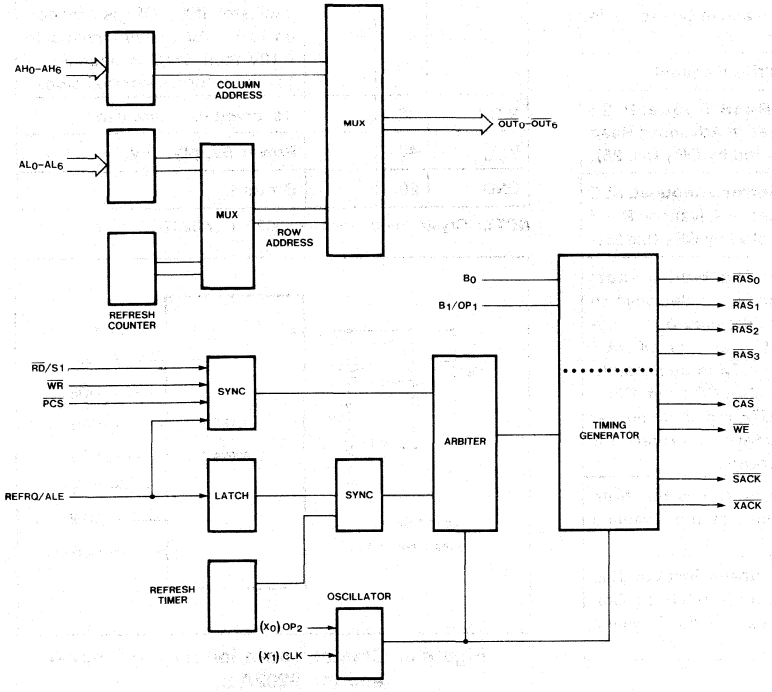

Figure 1. 8202A Block Diagram

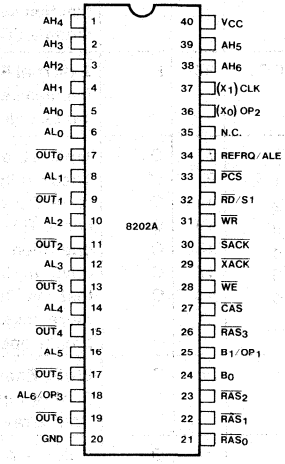

Figure 2. Pin Configuration

Table 1. Pin Descriptions

Symbol	Pin No.	Type	Name and Function
AL_0 AL_1 AL_2 AL_3 AL_4 AL_5 AL_6/OP_3	6 8 10 12 14 16 18	I I I I I I I	**Address Low:** CPU address inputs used to generate memory row address. AL_6/OP_3 used to select 4K RAM mode.
AH_0 AH_1 AH_2 AH_3 AH_4 AH_5 AH_6	5 4 3 2 1 39 38	I I I I I I I	**Address High:** CPU address inputs used to generate memory column address.
BO B_1/OP_1	24 25	I I	**Bank Select Inputs:** Used to gate the appropriate RAS_0-RAS_3 output for a memory cycle. B_1/OP_1 option used to select the Advanced Read Mode.
$\overline{PCS}$	33	I	**Protected Chip Select:** Used to enable the memory read and write inputs. Once a cycle is started, it will not abort even if $\overline{PCS}$ goes inactive before cycle completion.
$\overline{WR}$	31	I	**Memory Write Request.**
$\overline{RD}$/S1	32	I	**Memory Read Request:** S1 function used in Advanced Read mode selected by OP_1 (pin 25).
REFRQ/ ALE	34	I	**External Refresh Request:** ALE function used in Advanced Read mode, selected by OP_1 (pin 25).
$\overline{OUT}_0$ $\overline{OUT}_1$ $\overline{OUT}_2$ $\overline{OUT}_3$ $\overline{OUT}_4$ $\overline{OUT}_5$ $\overline{OUT}_6$	7 9 11 13 15 17 19	O O O O O O O	**Output of the Multiplexer:** These outputs are designed to drive the addresses of the Dynamic RAM array. For 4K RAM operation, $\overline{OUT}_6$ is designed to drive the 2104A $\overline{CS}$ input. (Note that the $\overline{OUT}_{0\text{-}6}$ pins do not require inverters or drivers for proper operation.
$\overline{WE}$	28	O	**Write Enable:** Drives the Write Enable inputs of the Dynamic RAM array.
$\overline{CAS}$	27	O	**Column Address Strobe:** This output is used to latch the Column Address into the Dynamic RAM array.
$\overline{RAS}_0$ $\overline{RAS}_1$ $\overline{RAS}_2$ $\overline{RAS}_3$	21 22 23 26	O O O O	**Row Address Strobe:** Used to latch the Row Address into the bank of dynamic RAMs, selected by the 8202A Bank Select pins (B_0, B_1/OP_1).
$\overline{XACK}$	29	O	**Transfer Acknowledge:** This output is a strobe indicating valid data during a read cycle or data written during a write cycle. $\overline{XACK}$ can be used to latch valid data from the RAM array.
$\overline{SACK}$	30	O	**System Acknowledge:** This output indicates the beginning of a memory access cycle. It can be used as an advanced transfer acknowledge to eliminate wait states. (Note: If a memory access request is made during a refresh cycle, $\overline{SACK}$ is delayed until $\overline{XACK}$ in the memory access cycle).
(X_0) OP_2 (X_1) CLK	36 37	I/O I/O	**Oscillator Inputs:** These inputs are designed for a quartz crystal to control the frequency of the oscillator. If X_0/OP_2 is connected to a 1KΩ resistor pulled to +12V then X_1/CLK becomes a TTL input for an external clock.
N.C.	35		Reserved for future use.
V_{CC}	40		**Power Supply:** +5V.
GND	20		**Ground.**

NOTE: Crystal mode for the 8202A-1 or 8202A-3 only.

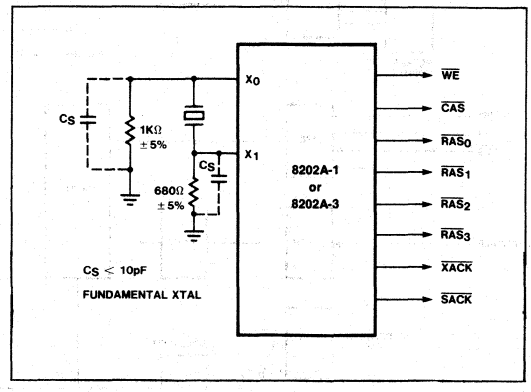

Figure 3. Crystal Operation for the 8202A-1 and the 8202A-3

Functional Description

The 8202A provides a complete dynamic RAM controller for microprocessor systems as well as expansion memory boards. All of the necessary control signals are provided for 2104A, 2117, and 2118 dynamic RAM's.

All 8202A timing is generated from a single reference clock. This clock is provided via an external oscillator or an on chip crystal oscillator. All output signal transitions are synchronous with respect to this clock reference, except for the CPU handshake signals $\overline{SACK}$ and $\overline{XACK}$ (trailing edge).

CPU memory requests normally use the $\overline{RD}$ and $\overline{WR}$ inputs. The advanced READ mode allows ALE and S1 to be used in place of the $\overline{RD}$ input.

Failsafe refresh is provided via an internal refresh timer which generates internal refresh requests. Refresh requests can also be generated via the REFRQ input.

An on-chip synchronizer/arbiter prevents memory and refresh requests from affecting a cycle in progress. The READ, WRITE, and external REFRESH requests may be asynchronous to the 8202A clock; on-chip logic will synchronize the requests, and the arbiter will decide if the requests should be delayed, pending completion of a cycle in progress.

Option Selection

The 8202A has three strapping options. When OP_1 is selected (16K mode only), pin 32 changes from a $\overline{RD}$ input to an S1 input, and pin 34 changes from a REFREQ input to an ALE input. See "Refresh Cycles" and "Read Cycles" for more detail. OP_1 is selected by tying pin 25 to +12V though a 5.1K ohm resistor.

When OP_2 is selected, by connecting pin 36 to +12V through a 1K ohm resistor, pin 37 changes from a crystal input (X_1) to the CLK input for an external TTL clock.

OP_3 is selected by connecting Pin 18 to +12V through a 5.1K ohm resistor. The 8202A will change its internal refresh timer from 128-row refresh (2118, 2117) to 64-row refresh (2104A).

Refresh Timer

The refresh timer is used to monitor the time since the last refresh cycle occurred. When the appropriate amount of time has elapsed, the refresh timer will request a refresh cycle. External refresh requests will reset the refresh timer.

Refresh Counter

The refresh counter is used to sequentially refresh all of the memory's rows. The 8-bit counter is incremented after every refresh cycle.

Address Multiplexer

The address multiplexer takes the address inputs and the refresh counter outputs, and gates them onto the address outputs at the appropriate time. The address outputs, in conjunction with the $\overline{RAS}$ and $\overline{CAS}$ outputs, determine the address used by the dynamic RAMs for read, write, and refresh cycles. During the first part of a read or write cycle, AL_0–AL_6 are gated to $\overline{OUT}_0$–$\overline{OUT}_6$, then AH_0–AH_6 are gated to the address outputs.

During a refresh cycle, the refresh counter is gated onto the address outputs. All refresh cycles are RAS-only refresh ($\overline{CAS}$ inactive, $\overline{RAS}$ active).

To minimize buffer delay, the information on the address outputs is inverted from that on the address inputs.

$\overline{OUT}_0$–$\overline{OUT}_6$ do not need inverters or buffers unless additional drive is required.

Synchronizer/Arbiter

The 8202A has three inputs, REFRQ/ALE (pin 34), $\overline{RD}$ (pin 32) and $\overline{WR}$ (pin 31). The $\overline{RD}$ and $\overline{WR}$ inputs allow an external CPU to request a memory read or write cycle, respectively. The REFRQ/ALE allows refresh requests to be requested external to the 8202A.

All three of these inputs may be asynchronous with respect to the 8202A's clock. The arbiter will resolve conflicts between refresh and memory requests, for both pending cycles and cycles in progress. Read and write requests will be given priority over refresh requests.

System Operation

The 8202A is always in one of the following states:

a) IDLE
b) TEST Cycle
c) REFRESH Cycle
d) READ Cycle
e) WRITE Cycle

The 8202A is normally in the IDLE state. Whenever one of the other cycles is requested, the 8202A will leave the IDLE state to perform the desired cycle. If no other cycles are pending, the 8202A will return to the IDLE state.

Description	Pin #	Normal Function	Option Function
B1/OP1	25	Bank (RAS) Select	Advanced-Read Mode
X_0/OP_2	36	Crystal Oscillator (8202A-1or 8202A-3)	External Oscillator
AL6/OP3	18	Address Input	64-ROW Refresh

Figure 4. 8202A Option Selection

Test Cycle

The TEST Cycle is used to check operation of several 8202A internal functions. TEST cycles are requested by activating the $\overline{RD}$ and $\overline{WR}$ inputs, independent of $\overline{PCS}$. The TEST Cycle will reset the refresh address counter and perform a WRITE Cycle. The TEST Cycle should not be used in normal system operation, since it would affect the dynamic RAM refresh.

Refresh Cycles

The 8202A has two ways of providing dynamic RAM refresh:

1) Internal (failsafe) refresh
2) External (hidden) refresh

Both types of 8202A refresh cycles activate all of the $\overline{RAS}$ outputs, while $\overline{CAS}$, $\overline{WE}$, $\overline{SACK}$, and $\overline{XACK}$ remain inactive.

Internal refresh is generated by the on-chip refresh timer. The timer uses the 8202A clock to ensure that refresh of all rows of the dynamic RAM occurs every 2 milliseconds. If REFRQ is inactive, the refresh timer will request a refresh cycle every 10-16 microseconds.

External refresh is requested via the REFRQ input (pin 34). External refresh control is not available when the Advanced-Read mode is selected. External refresh requests are latched, then synchronized to the 8202A clock.

The arbiter will allow the refresh request to start a refresh cycle only if the 8202A is not in the middle of a cycle.

Simultaneous memory request and external refresh request will result in the memory request being honored first. This 8202A characteristic can be used to "hide" refresh cycles during system operation. A circuit similar to Figure 5 can be used to decode the CPU's instruction fetch status to generate an external refresh request. The refresh request is latched while the 8202A performs the instruction fetch; the refresh cycle will start immediately after the memory cycle is completed, even if the $\overline{RD}$ input has not gone inactive. If the CPU's instruction decode time is long enough, the 8202A can complete the refresh cycle before the next memory request is generated.

Certain system configurations require complete external refresh requests. If external refresh is requested faster than the minimum internal refresh timer (t_{REF}), then, in effect, all refresh cycles will be caused by the external refresh request, and the internal refresh timer will never generate a refresh request.

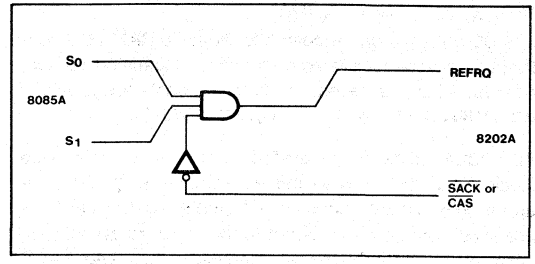

Figure 5. Hidden Refresh

Read Cycles

The 8202A can accept two different types of memory Read requests:

1) Normal Read, via the $\overline{RD}$ input
2) Advanced Read, using the S1 and ALE inputs

The user can select the desired Read request configuration via the B1/OP1 hardware strapping option on pin 25.

	Normal Read	Advanced Read
Pin 25	B1 input	+12 Volt Option
Pin 32	RD input	S1 input
Pin 34	REFRQ input	ALE input
# RAM banks	4 ($\overline{RAS}_{0-3}$)	2 ($\overline{RAS}_{2-3}$)
Ext. Refresh	Yes	No

Figure 6. 8202A Read Options

Normal Reads are requested by activating the $\overline{RD}$ input, and keeping it active until the 8202A responds with an $\overline{XACK}$ pulse. The $\overline{RD}$ input can go inactive as soon as the command hold time (t_{CHS}) is met.

Advanced Read cycles are requested by pulsing ALE while S1 is active; if S1 is inactive (low) ALE is ignored. Advanced Read timing is similiar to Normal Read timing, except the falling edge of ALE is used as the cycle start reference.

If a Read cycle is requested while a refresh cycle is in progress, then the 8202A will set the internal delayed-SACK latch. When the Read cycle is eventually started, the 8202A will delay the active $\overline{SACK}$ transition until $\overline{XACK}$ goes active, as shown in the AC timing diagrams. This delay was designed to compensate for the CPU's READY setup and hold times. The delayed-SACK latch is cleared after every READ cycle.

Based on system requirements, either $\overline{SACK}$ or $\overline{XACK}$ can be used to generate the CPU READY signal. $\overline{XACK}$ will

normally be used; if the CPU can tolerate an advanced READY, then $\overline{SACK}$ can be used, but only if the CPU can tolerate the amount of advance provided by $\overline{SACK}$. If $\overline{SACK}$ arrives too early to provide the appropriate number of WAIT states, then either $\overline{XACK}$ or a delayed form of $\overline{SACK}$ should be used.

Write Cycles

Write cycles are similiar to Normal Read cycles, except for the $\overline{WE}$ output. $\overline{WE}$ is held inactive for Read cycles, but goes active for Write cycles. All 8202A Write cycles are "early-write" cycles; $\overline{WE}$ goes active before $\overline{CAS}$ goes active by an amount of time sufficient to keep the dynamic RAM output buffers turned off.

General System Considerations

All memory requests (Normal Reads, Advanced Reads, Writes) are qualified by the $\overline{PCS}$ input. $\overline{PCS}$ should be stable, either active or inactive, prior to the leading edge of $\overline{RD}$, $\overline{WR}$, or ALE. Systems which use battery backup should pullup $\overline{PCS}$ to prevent erroneous memory requests, and should also pullup $\overline{WR}$ to keep the 8202A out of its test mode.

In order to minimize propagation delay, the 8202A uses an inverting address multiplexer without latches. The system must provide adequate address setup and hold times to guarantee $\overline{RAS}$ and $\overline{CAS}$ setup and hold times for the RAM. The 8202A t_{AD} AC parameter should be used for this system calculation.

The B0-B1 inputs are similiar to the address inputs in that they are not latched. B0 and B1 should not be changed during a memory cycle, since they directly control which $\overline{RAS}$ output is activated.

The 8202A uses a two-stage synchronizer for the memory request inputs ($\overline{RD}$, $\overline{WR}$, ALE), and a separate two stage synchronizer for the external refresh input (REFRQ). As with any synchronizer, there is always a finite probability of metastable states inducing system errors. The 8202A synchronizer was designed to have a system error rate less than 1 memory cycle every three years based on the full operating range of the 8202A.

A microprocessor system is concerned with the time data is valid after $\overline{RD}$ goes low. See Figure 7. In order to calculate memory read access times, the dynamic RAM's A.C. specifications must be examined, especially the RAS-access time (t_{RAC}) and the CAS-access time (t_{CAC}). Most configurations will be CAS-access limited; i.e., the data from the RAM will be stable $t_{cc,max}$ (8202A) + t_{CAC} (RAM) after a memory read cycle is started. Be sure to add any delays (due to buffers, data latches, etc.) to calculate the overall read access time.

Since the 8202A normally performs "early-write" cycles, the data must be stable at the RAM data inputs by the time $\overline{CAS}$ goes active, including the RAM's data setup time. If the system does not normally guarantee sufficient write data setup, you must either delay the $\overline{WR}$ input signal or delay the 8202A $\overline{WE}$ output.

Delaying the $\overline{WR}$ input will delay all 8202A timing, including the READY handshake signals, $\overline{SACK}$ and $\overline{XACK}$, which may increase the number of WAIT states generated by the CPU.

If the $\overline{WE}$ output is externally delayed beyond the $\overline{CAS}$ active transition, then the RAM will use the falling edge of $\overline{WE}$ to strobe the write data into the RAM. This $\overline{WE}$ transition should not occur too late during the CAS active transition, or else the $\overline{WE}$ to $\overline{CAS}$ requirements of the RAM will not be met.

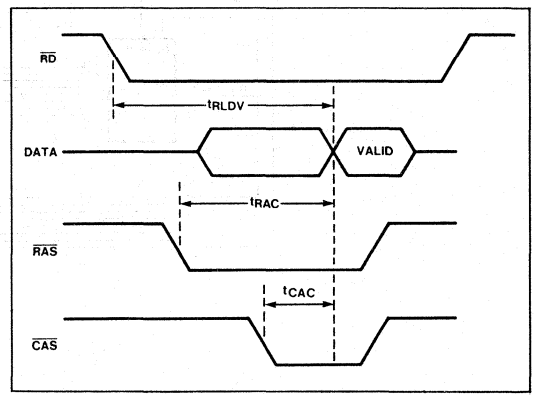

Figure 7. Read Access Time

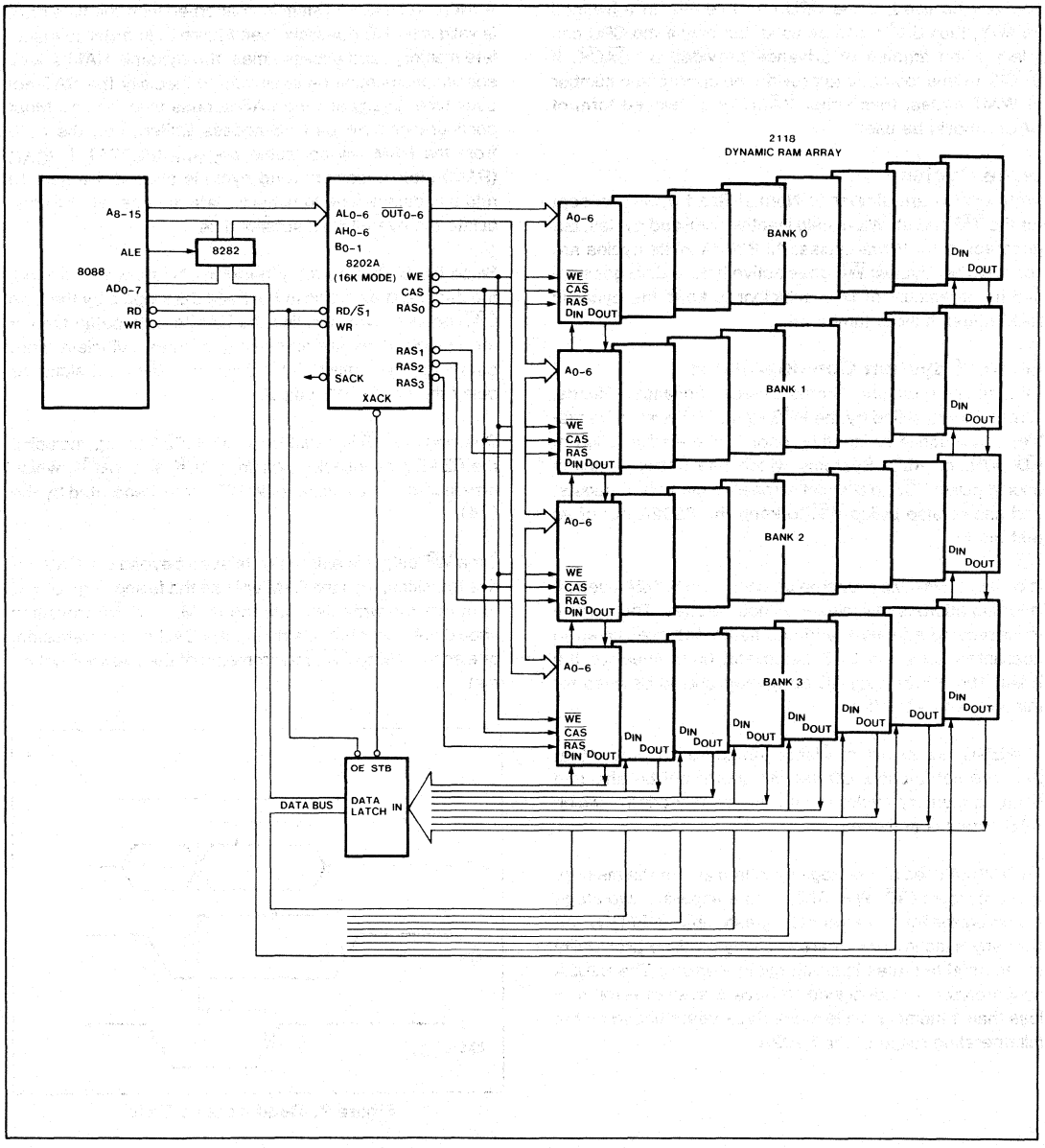

Figure 8. Typical 8088 System

ABSOLUTE MAXIMUM RATINGS*

Ambient Temperature Under Bias .....0°C to 70°C
Storage Temperature .....−65°C to +150°C
Voltage On any Pin
With Respect to Ground .....−0.5V to +7V[4]
Power Dissipation .....1.5 Watts

*NOTE: Stresses above those listed under "Absolute Maximum Ratings" may cause permanent damage to the device. This is a stress rating only and functional operation of the device at these or any other conditions above those indicated in the operational sections of this specification is not implied. Exposure to absolute maximum rating conditions for extended periods may affect device reliability.

D.C. CHARACTERISTICS

T_A = 0°C to 70°C; V_{CC} = 5.0V ± 10%, V_{CC} = 5.0V ± 5% for 8202A-3, GND = 0V

Symbol	Parameter	Min	Max	Units	Test Conditions
V_C	Input Clamp Voltage		−1.0	V	I_C = −5 mA
I_{CC}	Power Supply Current		270	mA	
I_F	Forward Input Current				
	CLK		−2.0	mA	V_F = 0.45V
	All Other Inputs[3]		−320	μA	V_F = 0.45V
I_R	Reverse Input Current[3]		40	μA	$V_R = V_{CC}$ (Note 1)
V_{OL}	Output Low Voltage				
	$\overline{SACK}$, $\overline{XACK}$		0.45	V	I_{OL} = 5 mA
	All Other Outputs		0.45	V	I_{OL} = 3 mA
V_{OH}	Output High Voltage				V_{IL} = 0.65V
	$\overline{SACK}$, $\overline{XACK}$	2.4		V	I_{OH} = −1 mA
	All Other Outputs	2.6		V	I_{OH} = −1 mA
V_{IL}	Input Low Voltage		0.8	V	V_{CC} = 5.0V (Note 2)
V_{IH1}	Input High Voltage	2.0		V	V_{CC} = 5.0V
V_{IH2}	Option Voltage			V	(Note 4)
C_{IN}	Input Capacitance		30	pF	F = 1 MHz V_{BIAS} = 2.5V, V_{CC} = 5V T_A = 25°C

NOTES:
1. I_R = 200 mA for pin 37 (CLK) for external clock mode.
2. For test mode $\overline{RD}$ & $\overline{WR}$ must be held at GND.
3. Except for pin 36.
4.

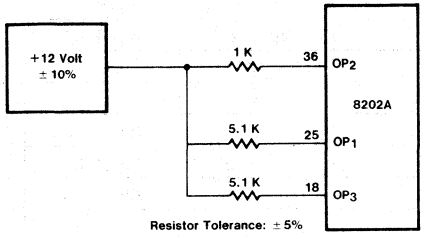

A.C. CHARACTERISTICS

T_A = 0°C to 70°C, V_{CC} = 5V ± 10%, V_{CC} = 5V ± 5% for 8202A-3

Measurements made with respect to $\overline{RAS}_0$-$\overline{RAS}_3$, $\overline{CAS}$, $\overline{WE}$,$\overline{OUT}_0$-$\overline{OUT}_6$ are at 2.4V and 0.8V. All other pins are measured at 1.5V. All times are in nsec.

Symbol	Parameter	Min	Max	Notes
t_P	Clock Period	40	54	
t_{PH}	External Clock High Time	20		
t_{PL}	External Clock Low Time—above (>) 20 mHz	17		
t_{PL}	External Clock Low Time—below (<) 20 mHz	20		
t_{RC}	Memory Cycle Time	10tp − 30	12tp	4, 5
t_{REF}	Refresh Time (64 cycles—4K mode)	548tp	576tp	
t_{REF}	Refresh Time (128 cycles—16K mode)	264tp	288tp	
t_{RP}	$\overline{RAS}$ Precharge Time	4tp − 30		
t_{RSH}	$\overline{RAS}$ Hold After $\overline{CAS}$	5tp − 30		3
t_{ASR}	Address Setup to $\overline{RAS}$	tp − 30		3
t_{RAH}	Address Hold From $\overline{RAS}$	tp − 10		3
t_{ASC}	Address Setup to $\overline{CAS}$	tp − 30		3
t_{CAH}	Address Hold from $\overline{CAS}$	5tp − 20		3
t_{CAS}	$\overline{CAS}$ Pulse Width	5tp − 10		
t_{WCS}	$\overline{WE}$ Setup to $\overline{CAS}$	tp − 40		
t_{WCH}	$\overline{WE}$ Hold After $\overline{CAS}$	5tp − 35		8
t_{RS}	$\overline{RD}$, $\overline{WR}$, ALE, REFRQ delay from $\overline{RAS}$	5tp		
t_{MRP}	$\overline{RD}$, $\overline{WR}$ setup to $\overline{RAS}$	0		5
t_{RMS}	REFRQ setup to $\overline{RD}$, $\overline{WR}$	2tp		
t_{RMP}	REFRQ setup to $\overline{RAS}$	2tp		5
t_{PCS}	$\overline{PCS}$ Setup to $\overline{RD}$, $\overline{WR}$, ALE	20		
t_{AL}	S1 Setup to ALE	15		
t_{LA}	S1 Hold from ALE	30		
t_{CR}	$\overline{RD}$, $\overline{WR}$, ALE to $\overline{RAS}$ Delay	tp + 30	2tp + 70	2
t_{CC}	$\overline{RD}$, $\overline{WR}$, ALE to $\overline{CAS}$ Delay	3tp + 25	4tp + 85	2
t_{SC}	CMD Setup to Clock	15		1
t_{MRS}	$\overline{RD}$, $\overline{WR}$ setup to REFRQ	5		
t_{CA}	$\overline{RD}$, $\overline{WR}$, ALE to $\overline{SACK}$ Delay		2tp + 47	2
t_{CX}	$\overline{CAS}$ to $\overline{XACK}$ Delay	5tp − 25	5tp + 20	
t_{CS}	$\overline{CAS}$ to $\overline{SACK}$ Delay	5tp − 25	5tp + 40	2
t_{ACK}	$\overline{XACK}$ to $\overline{CAS}$ Setup	10		
t_{XW}	$\overline{XACK}$ Pulse Width	tp − 25		7
t_{CK}	$\overline{SACK}$, $\overline{XACK}$ turn-off Delay		35	
t_{KCH}	CMD Inactive Hold after $\overline{SACK}$, $\overline{XACK}$	10		
t_{LL}	REFRQ Pulse Width	20		
t_{CHS}	CMD Hold Time	30		
t_{RFR}	REFRQ to $\overline{RAS}$ Delay		4tp + 100	6
t_{WW}	$\overline{WR}$ to $\overline{WE}$ Delay	0	50	8
t_{AD}	CPU Address Delay	0	40	3

WAVEFORMS

Normal Read or Write Cycle

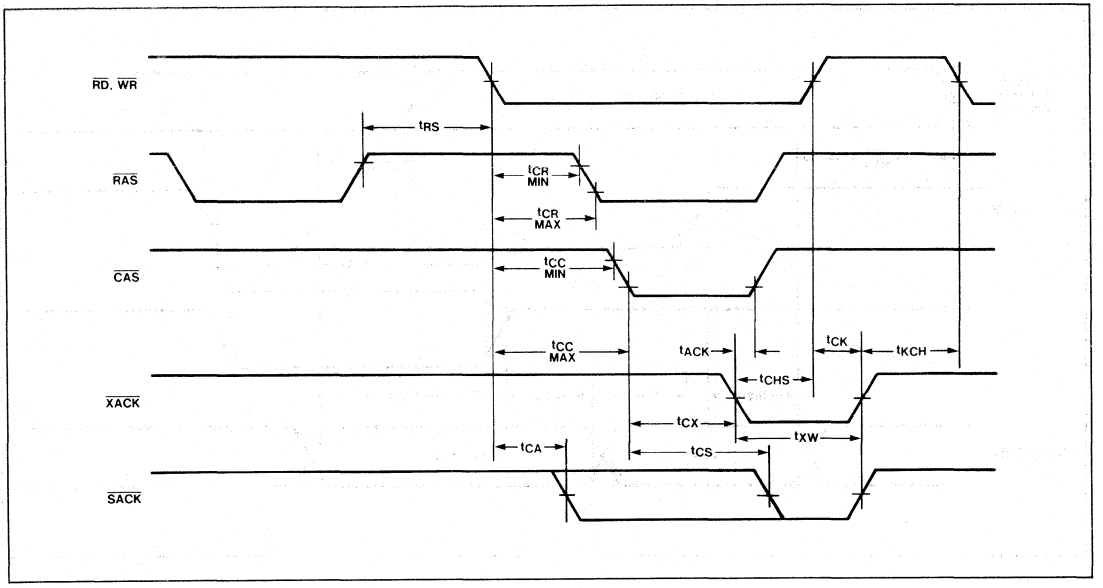

Advanced Read Mode

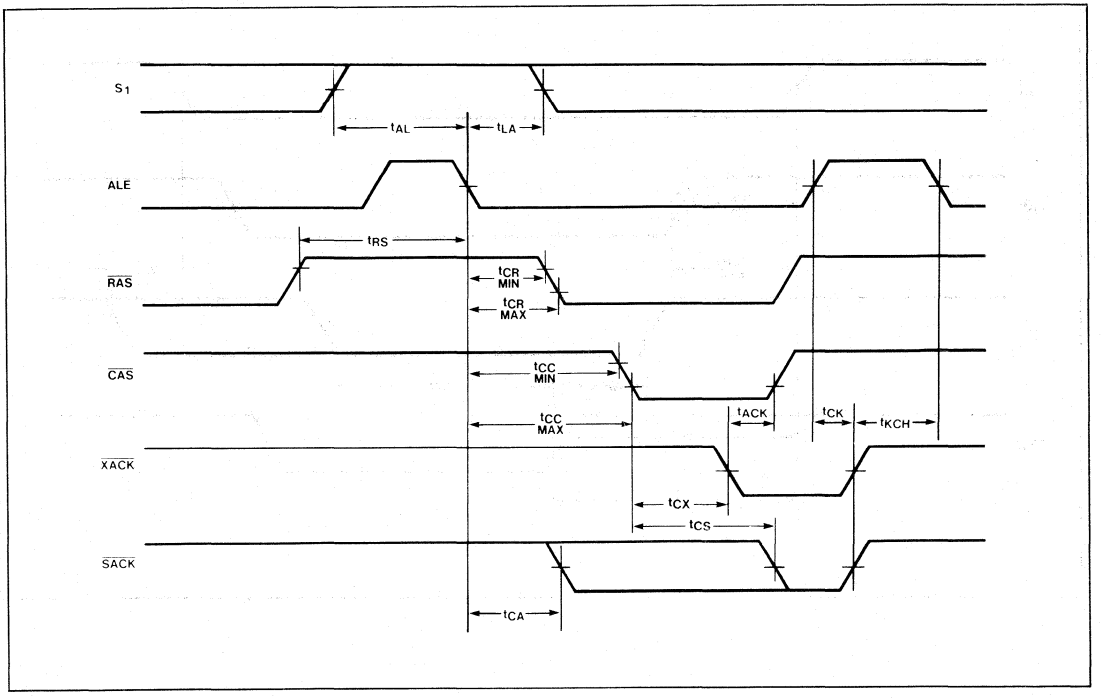

WAVEFORMS (cont'd)

Memory Compatibility Timing

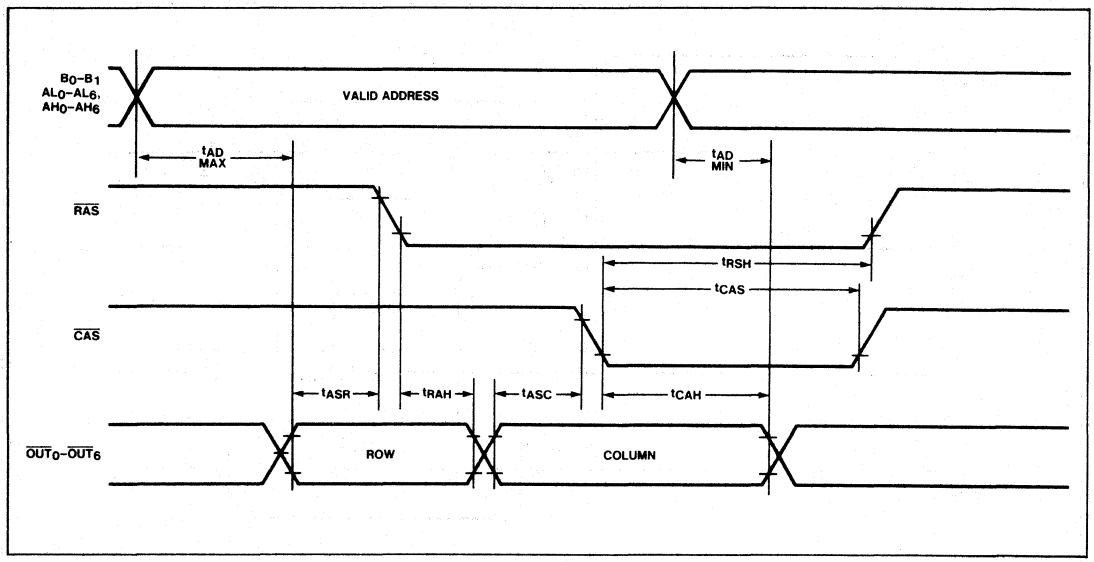

Write Cycle Timing

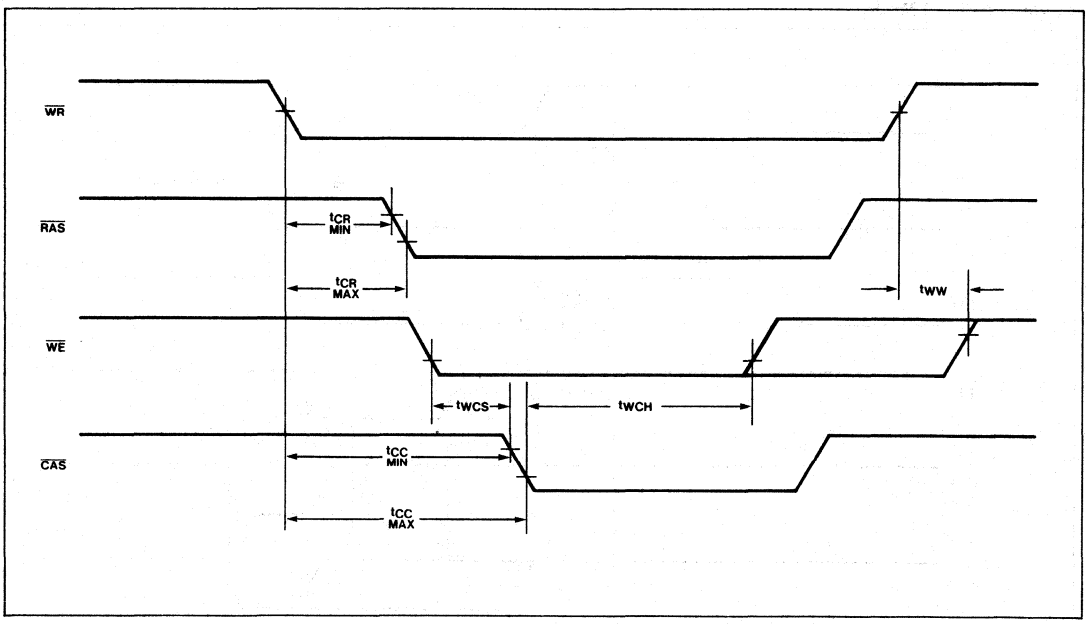

WAVEFORMS (cont'd)

Read or Write Followed By External Refresh

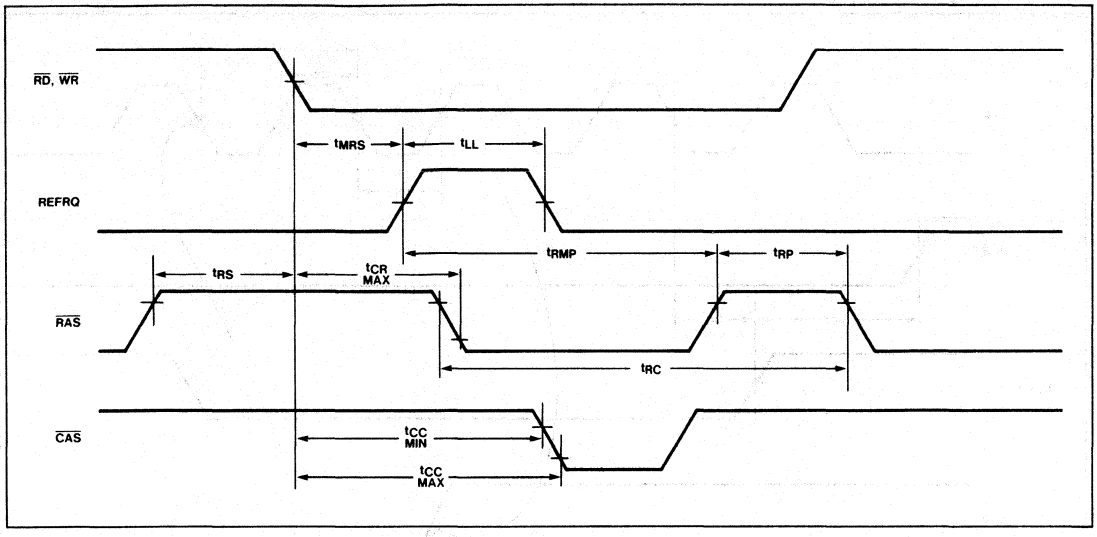

External Refresh Followed By Read or Write

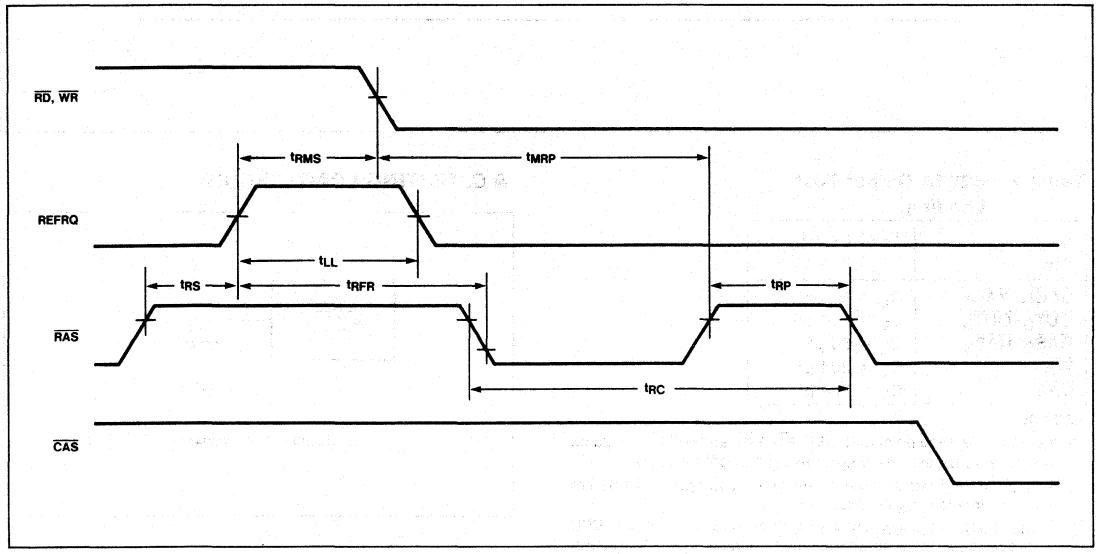

WAVEFORMS (cont'd)

Clock And System Timing

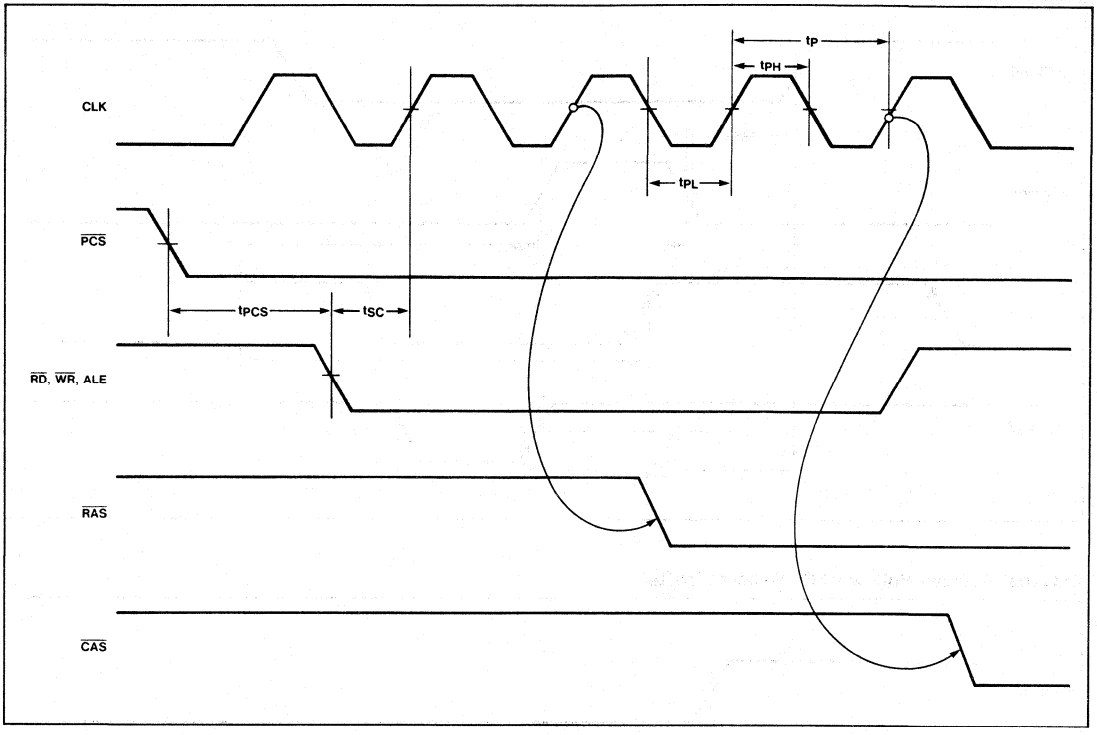

Table 2 8202A Output Test Loading.

Pin	Test Load
$\overline{SACK}$, $\overline{XACK}$	C_L = 30 pF
$\overline{OUT}_0$-$\overline{OUT}_6$	C_L = 160 pF
$\overline{RAS}_0$-$\overline{RAS}_3$	C_L = 60 pF
$\overline{WE}$	C_L = 224 pF
$\overline{CAS}$	C_L = 320 pF

NOTES:

1. t_{SC} is a referenoe point only. ALE, $\overline{RD}$, $\overline{WR}$, and REFRQ inputs do not have to be externally synchronized to 8202A clock.
2. If t_{RS} min and t_{MRS} min are met then, t_{CA}, t_{CR}, and t_{CC} are valid, otherwise t_{CS} is valid.
3. t_{ASR}, t_{RAH}, t_{ASC}, t_{CAH}, and t_{RSH} depend upon B0-B1 and CPU address remaining stable throughout the memory cycle. The address inputs are not latched by the 8202A.
4. For back-to-back refresh cycles, t_{RC} max = 13tp
5. t_{RC} max is valid only if t_{RMP} min is met (READ, WRITE followed by REFRESH) or t_{MRP} min is met (REFRESH followed by READ, WRITE).
6. t_{RFR} is valid only if t_{RS} min and t_{RMS} min are met.
7. t_{XW} min applies when $\overline{RD}$, $\overline{WR}$ has already gone high. Otherwise $\overline{XACK}$ follows $\overline{RD}$, $\overline{WR}$.
8. $\overline{WE}$ goes high according to t_{WCH} or t_{WW}, whichever occurs first.

A.C. TESTING LOAD CIRCUIT

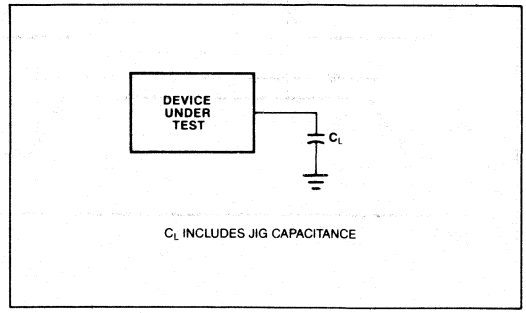

The typical rising and falling characteristic curves for the $\overline{OUT}$, $\overline{RAS}$, $\overline{CAS}$ and $\overline{WE}$ output buffers can be used to determine the effects of capacitive loading on the A.C. Timing Parameters. Using this design tool in conjunction with the timing waveforms, the designer can determine typical timing shifts based on system capacitive load.

A.C. CHARACTERISTICS FOR DIFFERENT CAPACITIVE LOADS

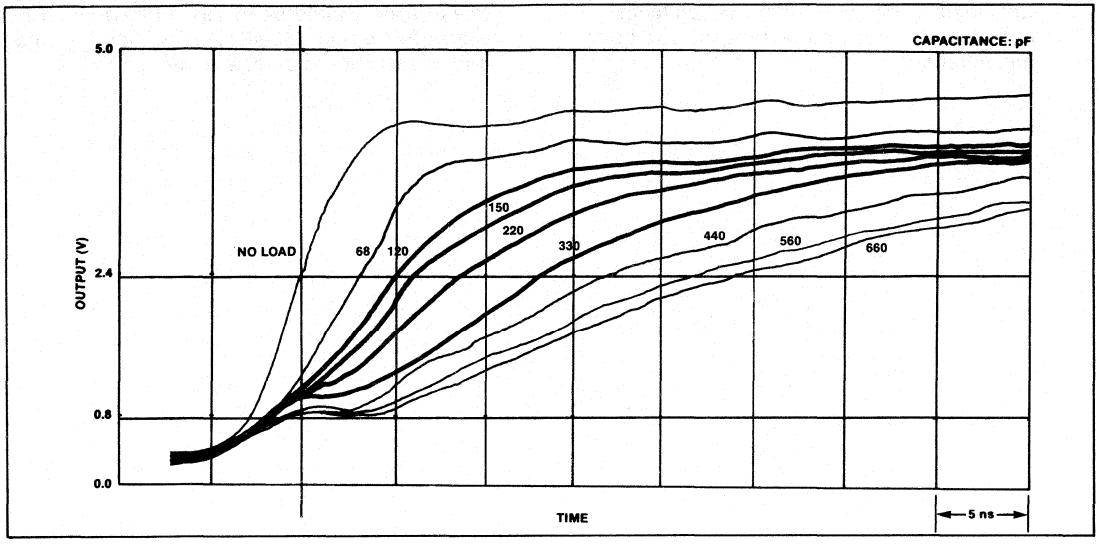

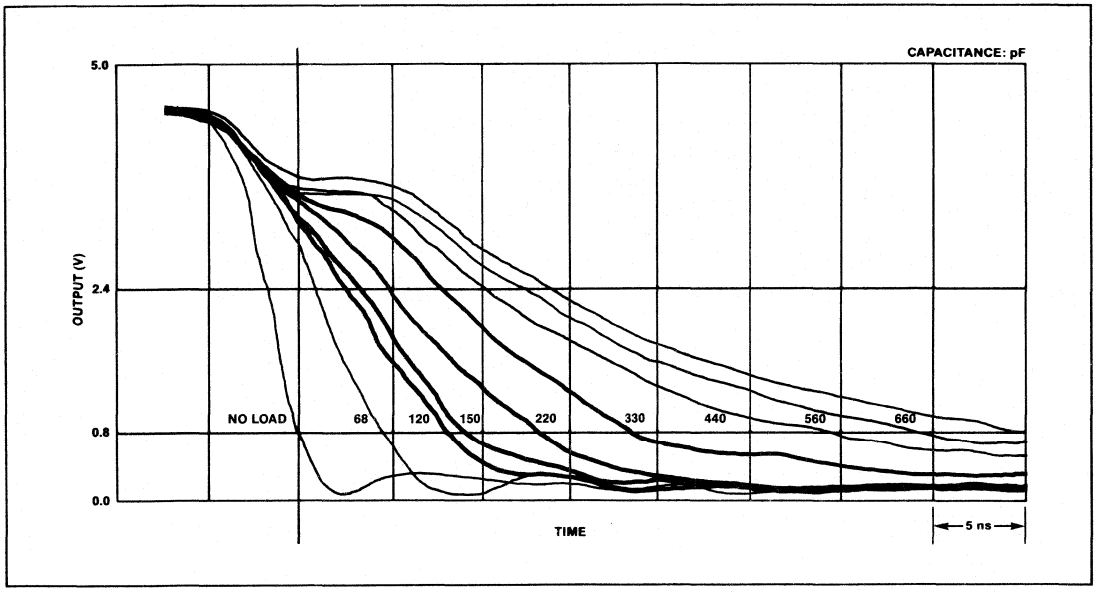

NOTE:
Use the Test Load as the base capacitance for estimating timing shifts for system critical timing parameters.

MEASUREMENT CONDITIONS:

T_A = 25°C
V_{CC} = +5V
t_p = 50 ns

Pins not measured are loaded with the Test Load capacitance.

Example: Find the effect on t_{CR} and t_{CC} using 64 2118 Dynamic RAMs configured in 4 banks.

1. Determine the typical RAS and CAS capacitance:
   From the data sheet RAS = 4 pF and CAS = 4 pF.
   ∴ RAS load = 64 pF + board capacitance.
   CAS load = 256 pF + board capacitance.
   Assume 2 pF/in (trace length) for board capacitance.
2. From the waveform diagrams, we determine that the falling edge timing is needed for t_{CR} and t_{CC}. Next find the curve that *best* approximates the test load; i.e., 68 pF for RAS and 330 pF for CAS.
3. If we use 72 pF for RAS loading, then the t_{CR} (max.) spec should be increased by *about* 1 ns. Similarly if we use 288 pF for CAS, then t_{CC} (min.) and (max.) should decrease about 1 ns.

8203
64K DYNAMIC RAM CONTROLLER

- **Provides All Signals Necessary to Control 64K (2164), 16K (2117, 2118) and 4K (2104A) Dynamic Memories**
- **Directly Addresses and Drives Up to 64 Devices Without External Drivers**
- **Provides Address Multiplexing and Strobes**
- **Provides a Refresh Timer and a Refresh Counter**
- **Provides Refresh/Access Arbitration**
- **Internal Clock Capability with the 8203-1 and the 8203-3**
- **Fully Compatible with Intel® 8080A, 8085A, iAPX 88, and iAPX 86 Family Microprocessors**
- **Decodes CPU Status for Advanced Read Capability in 16K mode**
- **Provides System Acknowledge and Transfer Acknowledge Signals**
- **Refresh Cycles May be Internally or Externally Requested (For Transparent Refresh)**
- **Internal Series Damping Resistors on All Outputs**

The Intel® 8203 is a Dynamic Ram System Controller designed to provide all signals necessary to use 2164, 2118, 2117, or 2104A Dynamic RAMs in microcomputer systems. The 8203 provides multiplexed addresses and address strobes, refresh logic, refresh/access arbitration. Refresh cycles can be started internally or externally. The 8203-1 and the 8203-3 support an internal crystal oscillator. The 8203-3 is a ±5% V_{CC} part.

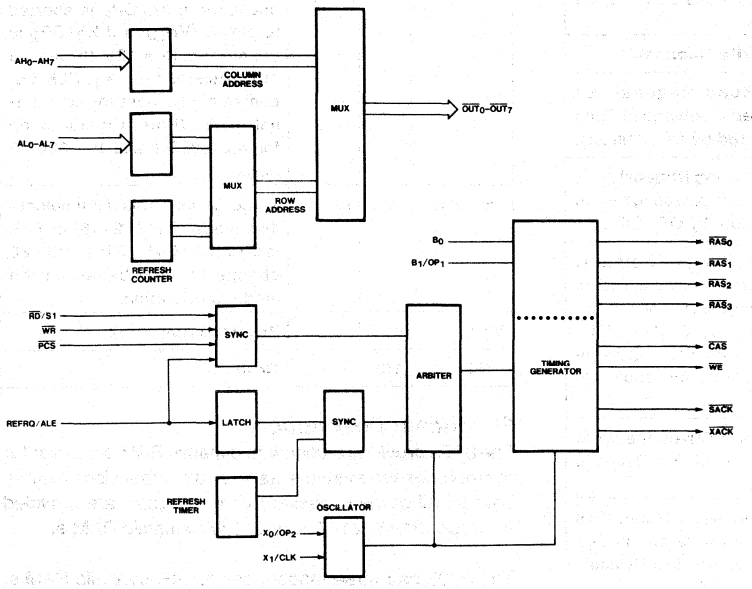

Figure 1. 8203 Block Diagram

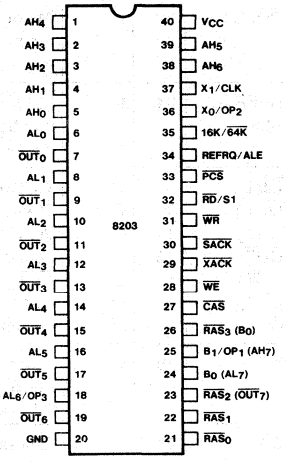

Figure 2. Pin Configuration

Table 1. Pin Descriptions

Symbol	Pin No.	Type	Name and Function
AL_0 AL_1 AL_2 AL_3 AL_4 AL_5 AL_6/OP_3	6 8 10 12 14 16 18	I I I I I I I	**Address Low:** CPU address inputs used to generate memory row address. AL_6/OP_3 used to select 4K RAM mode.
AH_0 AH_1 AH_2 AH_3 AH_4 AH_5 AH_6	5 4 3 2 1 39 38	I I I I I I I	**Address High:** CPU address inputs used to generate memory column address.
B_0/AL_7 $B_1/OP_1/$ AH_7	24 25	I I	**Bank Select Inputs:** Used to gate the appropriate RAS output for a memory cycle. B_1/OP_1 option used to select the Advanced Read Mode. (Not available in 64K mode.) See Figure 5. When in 64K RAM Mode, pins 24 and 25 operate as the AL_7 and AH_7 address inputs.
$\overline{PCS}$	33	I	**Protected Chip Select:** Used to enable the memory read and write inputs. Once a cycle is started, it will not abort even if $\overline{PCS}$ goes inactive before cycle completion.
$\overline{WR}$	31	I	**Memory Write Request.**
$\overline{RD}$/S1	32	I	**Memory Read Request:** S1 function used in Advanced Read mode selected by OP_1 (pin 25).
REFRQ/ ALE	34	I	**External Refresh Request:** ALE function used in Advanced Read mode, selected by OP_1 (pin 25).
$\overline{OUT_0}$ $\overline{OUT_1}$ $\overline{OUT_2}$ $\overline{OUT_3}$ $\overline{OUT_4}$ $\overline{OUT_5}$ $\overline{OUT_6}$	7 9 11 13 15 17 19	O O O O O O O	**Output of the Multiplexer:** These outputs are designed to drive the addresses of the Dynamic RAM array. (Note that the $\overline{OUT_{0-7}}$ pins do not require inverters or drivers for proper operation.)
$\overline{WE}$	28	O	**Write Enable:** Drives the Write Enable inputs of the Dynamic RAM array.
$\overline{CAS}$	27	O	**Column Address Strobe:** This output is used to latch the Column Address into the Dynamic RAM array.
$\overline{RAS_0}$ $\overline{RAS_1}$ $\overline{RAS_2}$/ $\overline{OUT_7}$ $\overline{RAS_3}/B_0$	21 22 23 26	O O O I/O	**Row Address Strobe:** Used to latch the Row Address into the bank of dynamic RAMs, selected by the 8203 Bank Select pins (B_0, B_1/OP_1). In 64K mode, only $\overline{RAS_0}$ and $\overline{RAS_1}$ are available; pin 23 operates as $\overline{OUT_7}$ and pin 26 operates as the B_0 bank select input.
$\overline{XACK}$	29	O	**Transfer Acknowledge:** This output is a strobe indicating valid data during a read cycle or data written during a write cycle. $\overline{XACK}$ can be used to latch valid data from the RAM array.
$\overline{SACK}$	30	O	**System Acknowledge:** This output indicates the beginning of a memory access cycle. It can be used as an advanced transfer acknowledge to eliminate wait states. (Note: If a memory access request is made during a refresh cycle, $\overline{SACK}$ is delayed until $\overline{XACK}$ in the memory access cycle).
X_0/OP_2 X_1/CLK	36 37	I/O I/O	**Oscillator Inputs:** These inputs are designed for a quartz crystal to control the frequency of the oscillator. If X_0/OP_2 is shorted to pin 40 (V_{CC}) or if X_0/OP_2 is connected to +12V through a 1KΩ resistor then X_1/CLK becomes a TTL input for an external clock. (Note: Crystal mode for the 8203-1 and the 8203-3 only).
16K/$\overline{64K}$	35	I	**Mode Select:** This input selects 16K mode (2117, 2118) or 64K mode (2164). Pins 23-26 change function based on the mode of operation.
V_{CC}	40		**Power Supply:** +5V.
GND	20		**Ground.**

Functional Description

The 8203 provides a complete dynamic RAM controller for microprocessor systems as well as expansion memory boards. All of the necessary control signals are provided for 2164, 2118, 2117, and 2104A dynamic RAM's.

The 8203 has three modes, one for 4K dynamic RAM's, one for 16K's and one for 64K's, controlled by pin 35 and pin 18.

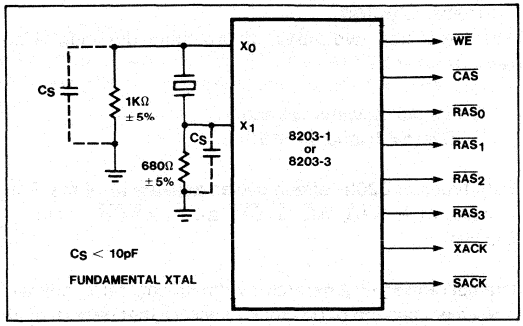

Figure 3. Crystal Operation for the 8203-1 and 8203-3

All 8203 timing is generated from a single reference clock. This clock is provided via an external oscillator or an on-chip crystal oscillator. All output signal transitions are synchronous with respect to this clock reference, except for the trailing edges of the CPU handshake signals $\overline{SACK}$ and $\overline{XACK}$.

CPU memory requests normally use the $\overline{RD}$ and $\overline{WR}$ inputs. The Advanced-Read mode allows ALE and S1 to be used in place of the $\overline{RD}$ input.

Failsafe refresh is provided via an internal timer which generates refresh requests. Refresh requests can also be generated via the REFRQ input.

An on-chip synchronizer/arbiter prevents memory and refresh requests from affecting a cycle in progress. The READ, WRITE, and external REFRESH requests may be asynchronous to the 8203 clock; on-chip logic will synchronize the requests, and the arbiter will decide if the requests should be delayed, pending completion of a cycle in progress.

16K/$\overline{64K}$ Option Selection

Pin 35 is a strap input that controls the two 8203 modes. Figure 4 shows the four pins that are multiplexed. In 16K mode (pin 35 tied to V_{CC} or left open), the 8203 has two Bank Select inputs to select one of four $\overline{RAS}$ outputs. In this mode, the 8203 is exactly compatible with the Intel 8202A Dynamic RAM Controller. In 64K mode (pin 35 tied to GND), there is only one Bank Select input (pin 26) to select the two $\overline{RAS}$ outputs. More than two banks of 64K dynamic RAM's can be used with external logic.

Other Option Selections

The 8203 has three strapping options. When OP_1 is selected (16K mode only), pin 32 changes from a $\overline{RD}$ input to an S1 input, and pin 34 changes from a REFRQ input to an ALE input. See "Refresh Cycles" and "Read Cycles" for more detail. OP_1 is selected by tying pin 25 to +12V through a 5.1K ohm resistor.

When OP_2 is selected, the internal oscillator is disabled and pin 37 changes from a crystal input (X_1) to a CLK input for an external TTL clock. OP_2 is selected by shorting pin 36 (X_0/OP_2) directly to pin 40 (V_{CC}). No current limiting resistor should be used. OP_2 may also be selected by tying pin 36 to +12V through a 1KΩ resistor.

OP_3 is selected by connecting pin 18 to +12V through a 5.1K ohm resistor, the 8203 will change its internal refresh timer from 128-row refresh (2164, 2118, 2117) to 64-row refresh (2104A).

Refresh Timer

The refresh timer is used to monitor the time since the last refresh cycle occurred. When the appropriate amount of time has elapsed, the refresh timer will request a refresh cycle. External refresh requests will reset the refresh timer.

Refresh Counter

The refresh counter is used to sequentially refresh all of the memory's rows. The 8-bit counter is incremented after every refresh cycle.

Pin #	16K Function	64K Function
23	$\overline{RAS_2}$	Address Output ($\overline{OUT_7}$)
24	Bank Select (B_0)	Address Input (AL_7)
25	Bank Select (B_1)	Address Input (AH_7)
26	$\overline{RAS_3}$	Bank Select (B_0)

Figure 4. 16K/$\overline{64K}$ Mode Selection

	Inputs		Outputs			
	B_1	B_0	$\overline{RAS_0}$	$\overline{RAS_1}$	$\overline{RAS_2}$	$\overline{RAS_3}$
16K Mode	0	0	0	1	1	1
	0	1	1	0	1	1
	1	0	1	1	0	1
	1	1	1	1	1	0
64K Mode	—	0	0	1	—	—
	—	1	1	0	—	—

Figure 5. Bank Selection

Description	Pin #	Normal Function	Option Function
B1/OP1 (16K only)/AH_7	25	Bank (RAS) Select	Advanced-Read Mode
X_0/OP_2	36	Crystal Oscillator (8203-1 and 8203-3)	External Oscillator
AL_6/OP_3	18	Address Input	64-Row Refresh

Figure 6. 8203 Option Selection

Address Multiplexer

The address multiplexer takes the address inputs and the refresh counter outputs, and gates them onto the address outputs at the appropriate time. The address outputs, in conjunction with the $\overline{RAS}$ and $\overline{CAS}$ outputs, determine the address used by the dynamic RAMs for read, write, and refresh cycles. During the first part of a read or write cycle, AL_0–AL_7 are gated to $\overline{OUT}_0$–$\overline{OUT}_7$, then AH_0–AH_7 are gated to the address outputs.

During a refresh cycle, the refresh counter is gated onto the address outputs. All refresh cycles are RAS-only refresh ($\overline{CAS}$ inactive, $\overline{RAS}$ active).

To minimize buffer delay, the information on the address outputs is inverted from that on the address inputs.

$\overline{OUT}_0$–$\overline{OUT}_7$ do not need inverters or buffers unless additional drive is required.

Synchronizer/Arbiter

The 8203 has three inputs, REFRQ/ALE (pin 34), $\overline{RD}$ (pin 32) and $\overline{WR}$ (pin 31). The $\overline{RD}$ and $\overline{WR}$ inputs allow an external CPU to request a memory read or write cycle, respectively. The REFRQ/ALE input allows refresh requests to be requested external to the 8203.

All three of these inputs may be asynchronous with respect to the 8203's clock. The arbiter will resolve conflicts between refresh and memory requests, for both pending cycles and cycles in progress. Read and write requests will be given priority over refresh requests.

System Operation

The 8203 is always in one of the following states:

a) IDLE
b) TEST Cycle
c) REFRESH Cycle
d) READ Cycle
e) WRITE Cycle

The 8203 is normally in the IDLE state. Whenever one of the other cycles is requested, the 8203 will leave the IDLE state to perform the desired cycle. If no other cycles are pending, the 8203 will return to the IDLE state.

Test Cycle

The TEST Cycle is used to check operation of several 8203 internal functions. TEST cycles are requested by activating the $\overline{PCS}$, $\overline{RD}$ and $\overline{WR}$ inputs. The TEST Cycle will reset the refresh address counter and perform a WRITE Cycle. The TEST Cycle should not be used in normal system operation, since it would affect the dynamic RAM refresh.

Refresh Cycles

The 8203 has two ways of providing dynamic RAM refresh:

1) Internal (failsafe) refresh
2) External (hidden) refresh

Both types of 8203 refresh cycles activate all of the $\overline{RAS}$ outputs, while $\overline{CAS}$, $\overline{WE}$, $\overline{SACK}$, and $\overline{XACK}$ remain inactive.

Internal refresh is generated by the on-chip refresh timer. The timer uses the 8203 clock to ensure that refresh of all rows of the dynamic RAM occurs every 2 milliseconds (128 cycles) or every 4 milliseconds (256 cycles). If REFRQ is inactive, the refresh timer will request a refresh cycle every 10-16 microseconds.

External refresh is requested via the REFRQ input (pin 34). External refresh control is not available when the Advanced-Read mode is selected. External refresh requests are latched, then synchronized to the 8203 clock.

The arbiter will allow the refresh request to start a refresh cycle only if the 8203 is not in the middle of a cycle.

When the 8203 is in the idle state a simultaneous memory request and external refresh request will result in the memory request being honored first. This 8203 characteristic can be used to "hide" refresh cycles during system operation. A circuit similar to Figure 7 can be used to decode the CPU's instruction fetch status to generate an external refresh request. The refresh request is latched while the 8203 performs the instruction fetch; the refresh cycle will start immediately after the memory cycle is completed, even if the $\overline{RD}$ input has not gone inactive. If the CPU's instruction decode time is long enough, the 8203 can complete the refresh cycle before the next memory request is generated.

If the 8203 is not in the idle state then a simultaneous memory request and an external refresh request may result in the refresh request being honored first.

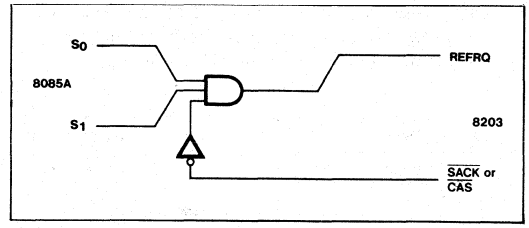

Figure 7. Hidden Refresh

Certain system configurations require complete external refresh requests. If external refresh is requested faster than the minimum internal refresh timer (t_{REF}), then, in effect, all refresh cycles will be caused by the external refresh request, and the internal refresh timer will never generate a refresh request.

Read Cycles

The 8203 can accept two different types of memory Read requests:

1) Normal Read, via the $\overline{RD}$ input
2) Advanced Read, using the S1 and ALE inputs (16K mode only)

The user can select the desired Read request configuration via the B1/OP1 hardware strapping option on pin 25.

	Normal Read	Advanced Read
Pin 25	B1 input	OP_1 (+12V)
Pin 32	RD input	S1 input
Pin 34	REFRQ input	ALE input
# RAM banks	4 ($\overline{RAS}_{0-3}$)	2 ($\overline{RAS}_{2-3}$)
Ext. Refresh	Yes	No

Figure 8. 8203 Read Options

Normal Reads are requested by activating the $\overline{RD}$ input, and keeping it active until the 8203 responds with an $\overline{XACK}$ pulse. The $\overline{RD}$ input can go inactive as soon as the command hold time (t_{CHS}) is met.

Advanced Read cycles are requested by pulsing ALE while S1 is active; if S1 is inactive (low) ALE is ignored. Advanced Read timing is similiar to Normal Read timing, except the falling edge of ALE is used as the cycle start reference.

If a Read cycle is requested while a refresh cycle is in progress, then the 8203 will set the internal delayed-SACK latch. When the Read cycle is eventually started, the 8203 will delay the active $\overline{SACK}$ transition until $\overline{XACK}$ goes active, as shown in the AC timing diagrams. This delay was designed to compensate for the CPU's READY setup and hold times. The delayed–SACK latch is cleared after every READ cycle.

Based on system requirements, either $\overline{SACK}$ or $\overline{XACK}$ can be used to generate the CPU READY signal. $\overline{XACK}$ will normally be used; if the CPU can tolerate an advanced READY, then $\overline{SACK}$ can be used, but only if the CPU can tolerate the amount of advance provided by $\overline{SACK}$. If $\overline{SACK}$ arrives too early to provide the appropriate number of WAIT states, then either $\overline{XACK}$ or a delayed form of $\overline{SACK}$ should be used.

Write Cycles

Write cycles are similiar to Normal Read cycles, except for the $\overline{WE}$ output. $\overline{WE}$ is held inactive for Read cycles, but goes active for Write cycles. All 8203 Write cycles are "early-write" cycles; $\overline{WE}$ goes active before $\overline{CAS}$ goes active by an amount of time sufficient to keep the dynamic RAM output buffers turned off.

General System Considerations

All memory requests (Normal Reads, Advanced Reads, Writes) are qualified by the $\overline{PCS}$ input. $\overline{PCS}$ should be stable, either active or inactive, prior to the leading edge of $\overline{RD}$, $\overline{WR}$, or ALE. Systems which use battery backup should pullup $\overline{PCS}$ to prevent erroneous memory requests.

In order to minimize propagation delay, the 8203 uses an inverting address multiplexer without latches. The system must provide adequate address setup and hold times to guarantee $\overline{RAS}$ and $\overline{CAS}$ setup and hold times for the RAM. The t_{AD} AC parameter should be used for this system calculation.

The B_0-B_1 inputs are similiar to the address inputs in that they are not latched. B_0 and B_1 should not be changed during a memory cycle, since they directly control which $\overline{RAS}$ output is activated.

The 8203 uses a two-stage synchronizer for the memory request inputs ($\overline{RD}$, $\overline{WR}$, ALE), and a separate two stage synchronizer for the external refresh input (REFRQ). As with any synchronizer, there is always a finite probability of metastable states inducing system errors. The 8203 synchronizer was designed to have a system error rate less than 1 memory cycle every three years based on the full operating range of the 8203.

A microprocessor system is concerned when the data is valid after $\overline{RD}$ goes low. See Figure 9. In order to calculate memory read access times, the dynamic RAM's A.C. specifications must be examined, especially the RAS-access time (t_{RAC}) and the CAS-access time (t_{CAC}). Most configurations will be CAS-access limited; i.e., the data from the RAM will be stable $t_{cc,max}$ (8203) + t_{CAC} (RAM) after a memory read cycle is started. Be sure to add any delays (due to buffers, data latches, etc.) to calculate the overall read access time.

Since the 8203 normally performs "early-write" cycles, the data must be stable at the RAM data inputs by the time $\overline{CAS}$ goes active, including the RAM's data setup time. If the system does not normally guarantee sufficient write data setup, you must either delay the $\overline{WR}$ input signal or delay the 8203 $\overline{WE}$ output.

Delaying the $\overline{WR}$ input will delay all 8203 timing, including the READY handshake signals, $\overline{SACK}$ and $\overline{XACK}$, which

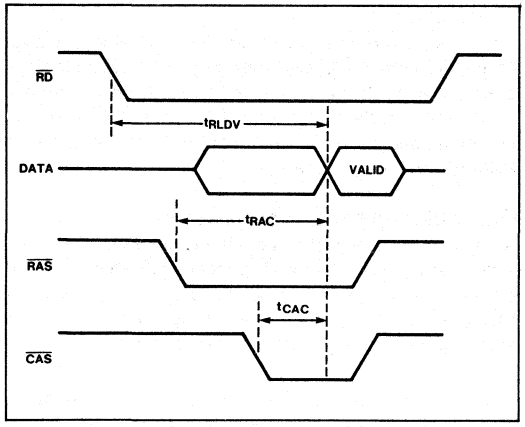

Figure 9. Read Access Time

may increase the number of WAIT states generated by the CPU.

If the $\overline{WE}$ output is externally delayed beyond the $\overline{CAS}$ active transition, then the RAM will use the falling edge of $\overline{WE}$ to strobe the write data into the RAM. This $\overline{WE}$ transition should not occur too late during the CAS active transition, or else the $\overline{WE}$ to $\overline{CAS}$ requirements of the RAM will not be met.

The $\overline{RAS}_{0-3}$, $\overline{CAS}$, $\overline{OUT}_{0-6}$, and $\overline{WE}$ outputs contain on-chip series damping resistors (typically 20Ω) to minimize overshoot.

Some dynamic RAMs require more than 2.4V V_{IH}. Noise immunity may be improved for these RAMs by adding pull-up resistors to the 8203's outputs. Intel RAMs do not require pull-up resistors.

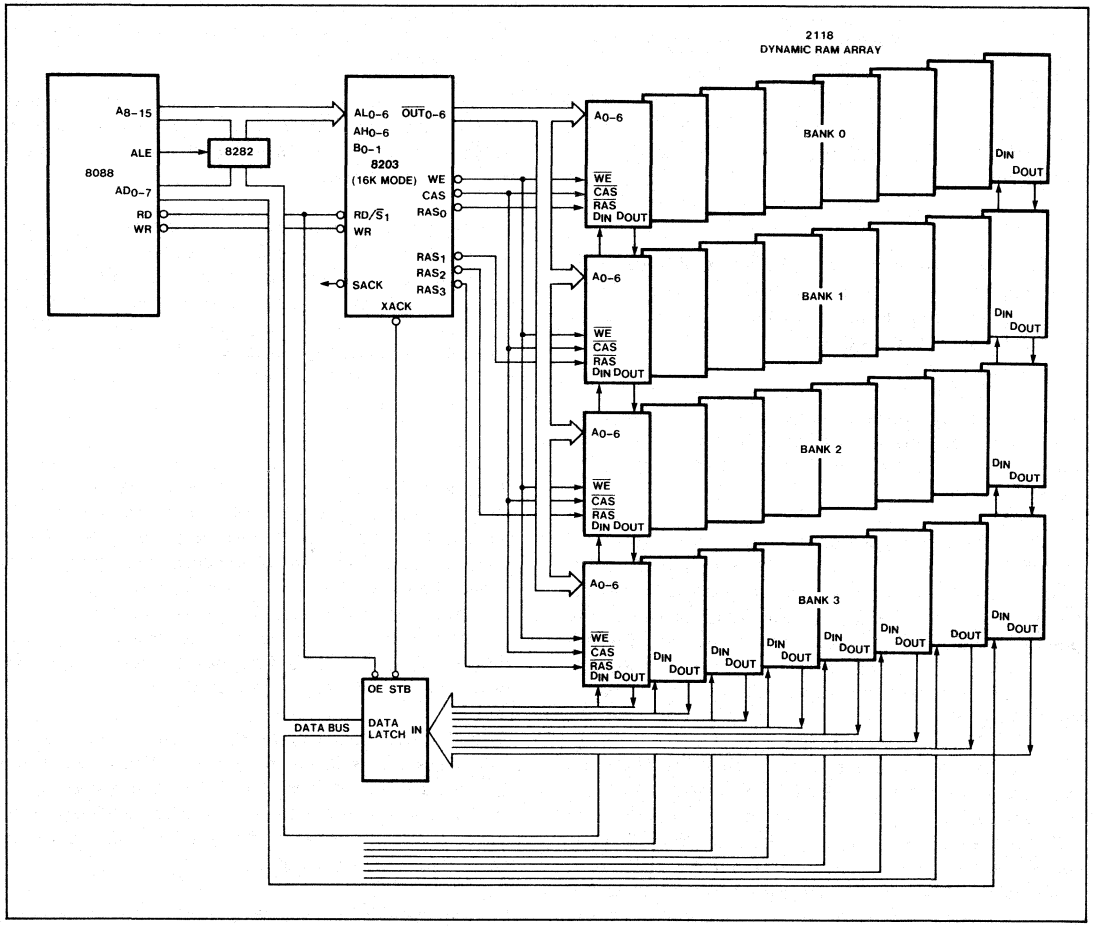

Figure 10. Typical 8088 System

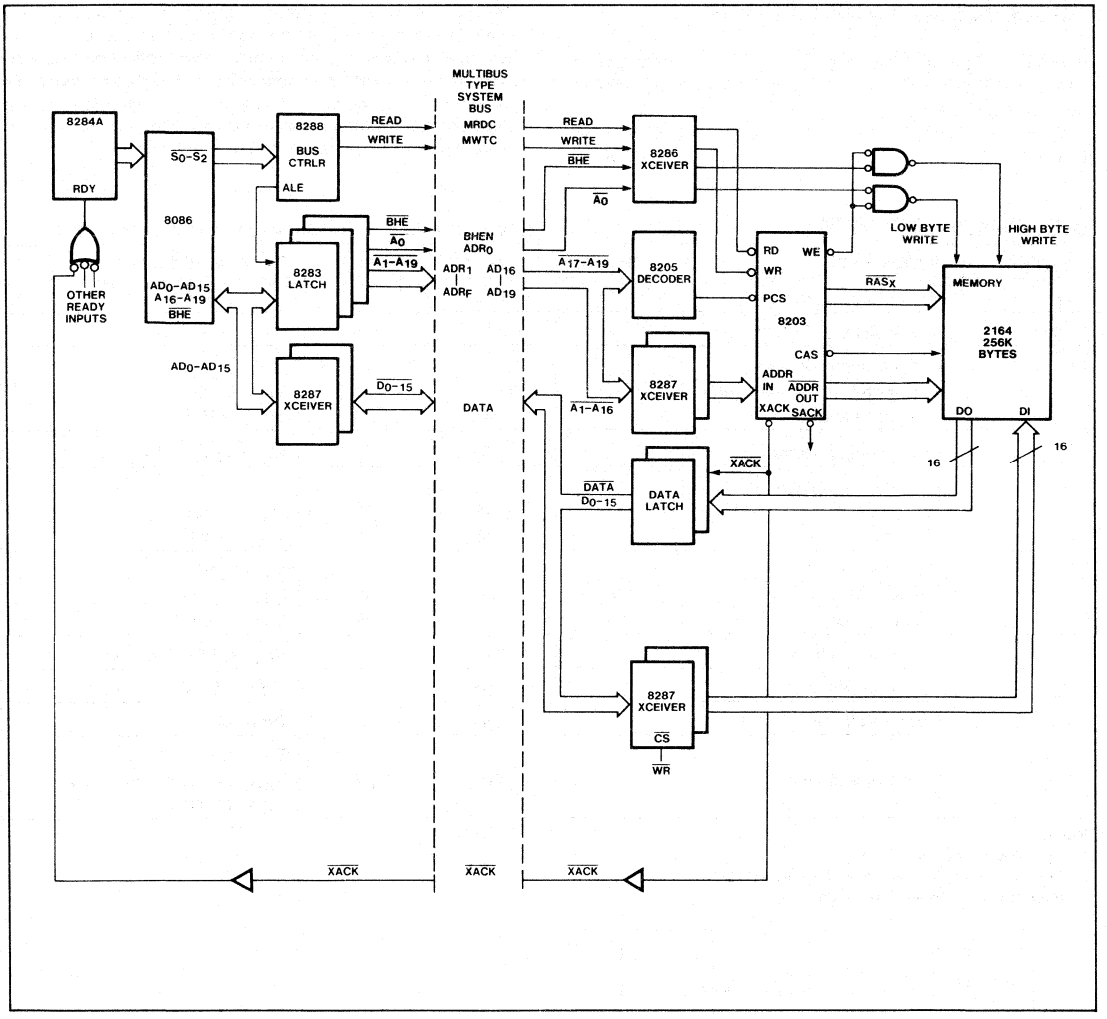

Figure 11. 8086/256K Byte System

ABSOLUTE MAXIMUM RATINGS*

Ambient Temperature Under Bias .....0°C to 70°C
Storage Temperature .....−65°C to +150°C
Voltage On any Pin
With Respect to Ground .....−0.5V to +7V[4]
Power Dissipation .....1.5 Watts

**NOTE: Stresses above those listed under "Absolute Maximum Ratings" may cause permanent damage to the device. This is a stress rating only and functional operation of the device at these or any other conditions above those indicated in the operational sections of this specification is not implied. Exposure to absolute maximum rating conditions for extended periods may affect device reliability.*

D.C. CHARACTERISTICS

T_A = 0°C to 70°C; V_{CC} = 5.0V ± 10% (5.0V ± 5% for 8203-3); GND = 0V

Symbol	Parameter	Min	Max	Units	Test Conditions
V_C	Input Clamp Voltage		−1.0	V	I_C = −5 mA
I_{CC}	Power Supply Current		290	mA	
I_F	Forward Input Current				
	CLK, 64K/16K Mode select		−2.0	mA	V_F = 0.45V
	All Other Inputs[3]		−320	μA	V_F = 0.45V
I_R	Reverse Input Current[3]		40	μA	V_R = V_{CC}; Note 1
V_{OL}	Output Low Voltage				
	$\overline{SACK}$, $\overline{XACK}$		0.45	V	I_{OL} = 5 mA
	All Other Outputs		0.45	V	I_{OL} = 3 mA
V_{OH}	Output High Voltage				V_{IL} = 0.65 V
	$\overline{SACK}$, $\overline{XACK}$	2.4		V	I_{OH} = −1 mA
	All Other Outputs	2.6		V	I_{OH} = −1 mA
V_{IL}	Input Low Voltage		0.8	V	V_{CC} = 5.0V (Note 2)
V_{IH1}	Input High Voltage	2.0	V_{CC}	V	V_{CC} = 5.0V
V_{IH2}	Option Voltage		V_{CC}	V	(Note 4)
C_{IN}	Input Capacitance		30	pF	F = 1 MHz V_{BIAS} = 2.5V, V_{CC} = 5V T_A = 25°C

NOTES:
1. I_R = 200 μA for pin 37 (CLK).
2. For test mode $\overline{RD}$ & $\overline{WR}$ must be held at GND.
3. Except for pin 36 in XTAL mode.
4.

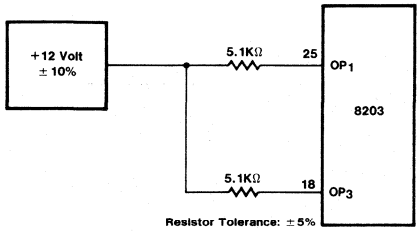

A.C. CHARACTERISTICS

T_A = 0°C to 70°C; V_{CC} = 5V ± 10% (5.0V ± 5% for 8203-3); GND = 0V

Measurements made with respect to $\overline{RAS}_0$-$\overline{RAS}_3$, $\overline{CAS}$, $\overline{WE}$, $\overline{OUT}_0$-$\overline{OUT}_6$ are at 2.4V and 0.8V. All other pins are measured at 1.5V. All times are in nsec.

Symbol	Parameter	Min	Max	Notes
t_P	Clock Period	40	54	
t_{PH}	External Clock High Time	20		
t_{PL}	External Clock Low Time—above (>) 20 mHz	17		
t_{PL}	External Clock Low Time—below (≤) 20 mHz	20		
t_{RC}	Memory Cycle Time	10tp − 30	12tp	4, 5
t_{REF}	Refresh Time (64 cycles—4K mode)	548tp	576tp	
t_{REF}	Refresh Time (128 cycles)	264tp	288tp	
t_{RP}	$\overline{RAS}$ Precharge Time	4tp − 30		
t_{RSH}	$\overline{RAS}$ Hold After $\overline{CAS}$	5tp − 30		3
t_{ASR}	Address Setup to $\overline{RAS}$	tp − 30		3
t_{RAH}	Address Hold From $\overline{RAS}$	tp − 10		3
t_{ASC}	Address Setup to $\overline{CAS}$	tp − 30		3
t_{CAH}	Address Hold from $\overline{CAS}$	5tp − 20		3
t_{CAS}	$\overline{CAS}$ Pulse Width	5tp − 10		
t_{WCS}	$\overline{WE}$ Setup to $\overline{CAS}$	tp − 40		
t_{WCH}	$\overline{WE}$ Hold After $\overline{CAS}$	5tp − 35		8
t_{RS}	$\overline{RD}$, $\overline{WR}$, ALE, REFRQ delay from $\overline{RAS}$	5tp		2, 6
t_{MRP}	$\overline{RD}$, $\overline{WR}$ setup to $\overline{RAS}$	0		5
t_{RMS}	REFRQ setup to $\overline{RD}$, $\overline{WR}$	2tp		6
t_{RMP}	REFRQ setup to $\overline{RAS}$	2tp		5
t_{PCS}	$\overline{PCS}$ Setup to $\overline{RD}$, $\overline{WR}$, ALE	20		
t_{AL}	S1 Setup to ALE	15		
t_{LA}	S1 Hold from ALE	30		
t_{CR}	$\overline{RD}$, $\overline{WR}$, ALE to $\overline{RAS}$ Delay	tp + 30	2tp + 70	2
t_{CC}	$\overline{RD}$, $\overline{WR}$, ALE to $\overline{CAS}$ Delay	3tp + 25	4tp + 85	2
t_{SC}	CMD Setup to Clock	15		1
t_{MRS}	$\overline{RD}$, $\overline{WR}$ setup to REFRQ	5		2
t_{CA}	$\overline{RD}$, $\overline{WR}$, ALE to $\overline{SACK}$ Delay		2tp + 47	2
t_{CX}	$\overline{CAS}$ to $\overline{XACK}$ Delay	5tp − 25	5tp + 20	
t_{CS}	$\overline{CAS}$ to $\overline{SACK}$ Delay	5tp − 25	5tp + 40	2
t_{ACK}	$\overline{XACK}$ to $\overline{CAS}$ Setup	10		
t_{XW}	$\overline{XACK}$ Pulse Width	tp − 25		7
t_{CK}	$\overline{SACK}$, $\overline{XACK}$ turn-off Delay		35	
t_{KCH}	CMD Inactive Hold after $\overline{SACK}$, $\overline{XACK}$	10		
t_{LL}	REFRQ Pulse Width	20		
t_{CHS}	CMD Hold Time	30		
t_{RFR}	REFRQ to $\overline{RAS}$ Delay		4tp + 100	6
t_{WW}	$\overline{WR}$ to $\overline{WE}$ Delay	0	50	8
t_{AD}	CPU Address Delay	0	40	3

WAVEFORMS

Normal Read or Write Cycle

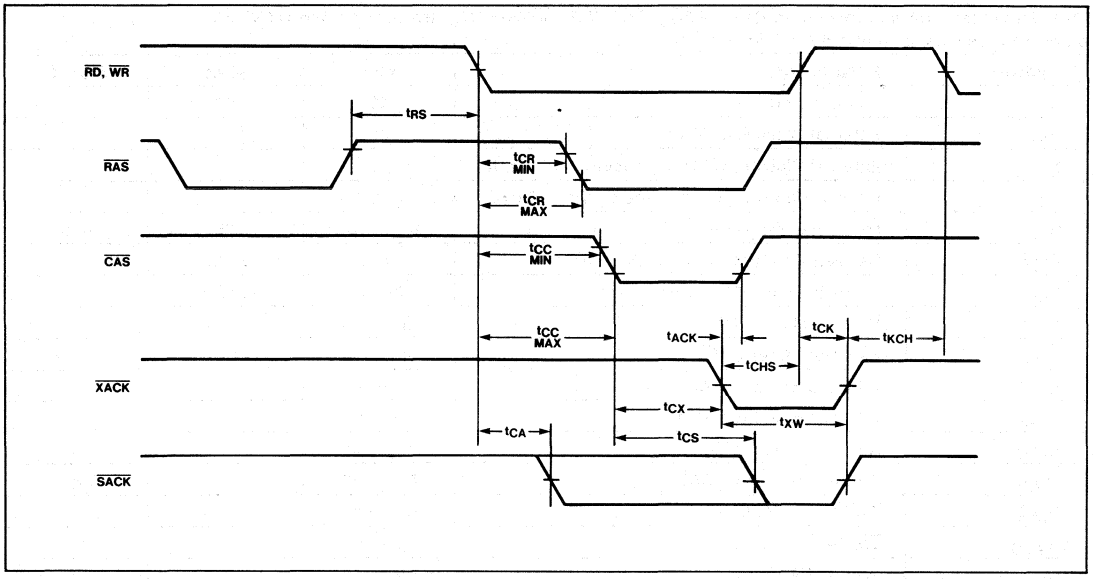

Advanced Read Mode

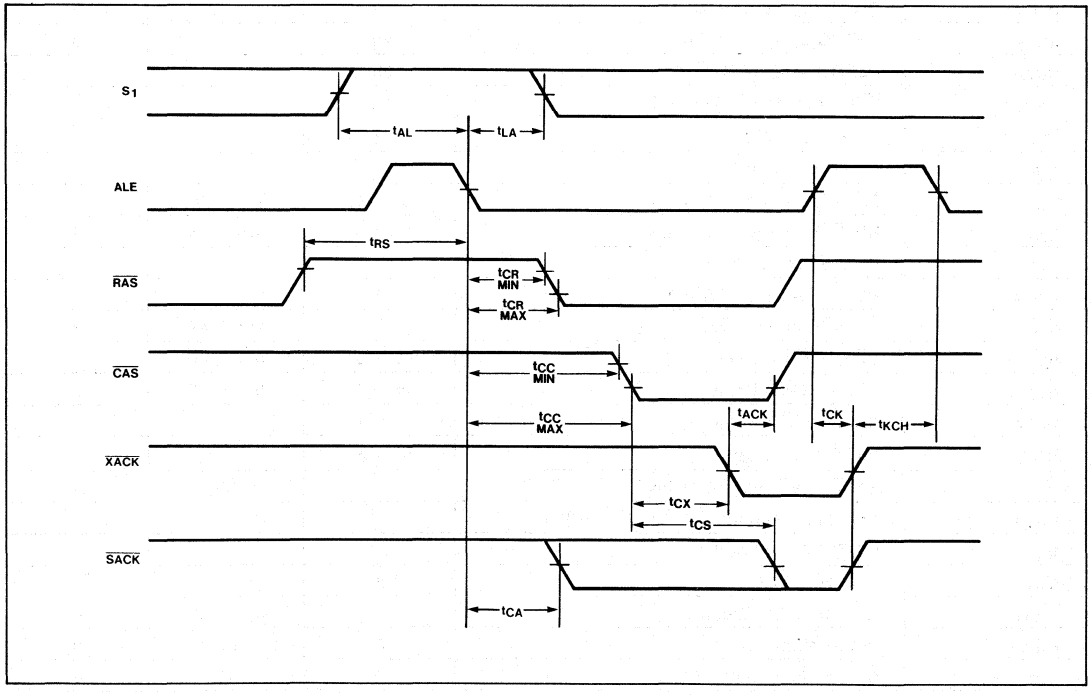

WAVEFORMS (cont'd)

Memory Compatibility Timing

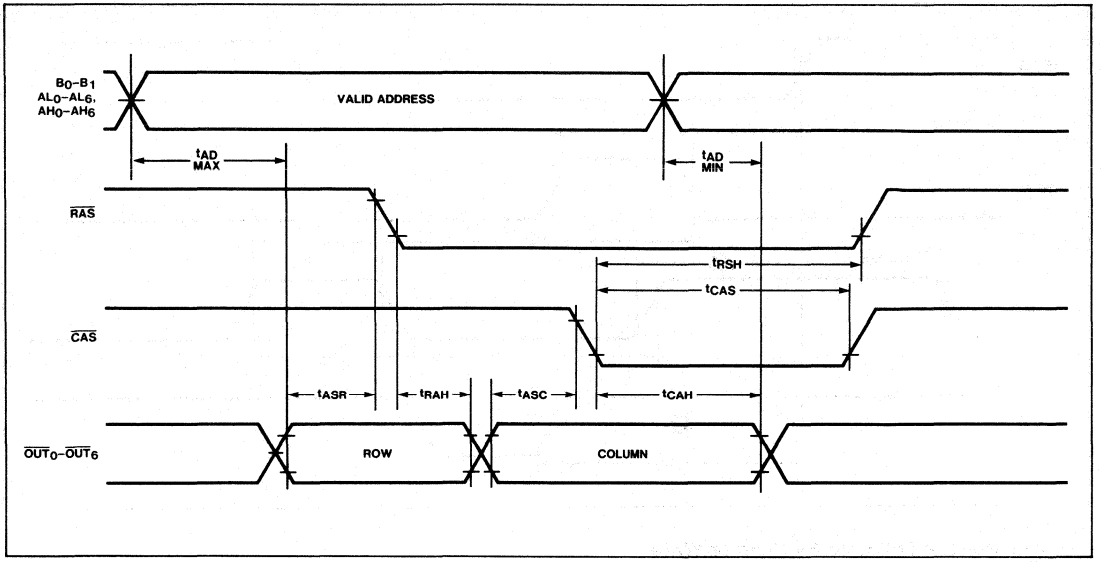

Write Cycle Timing

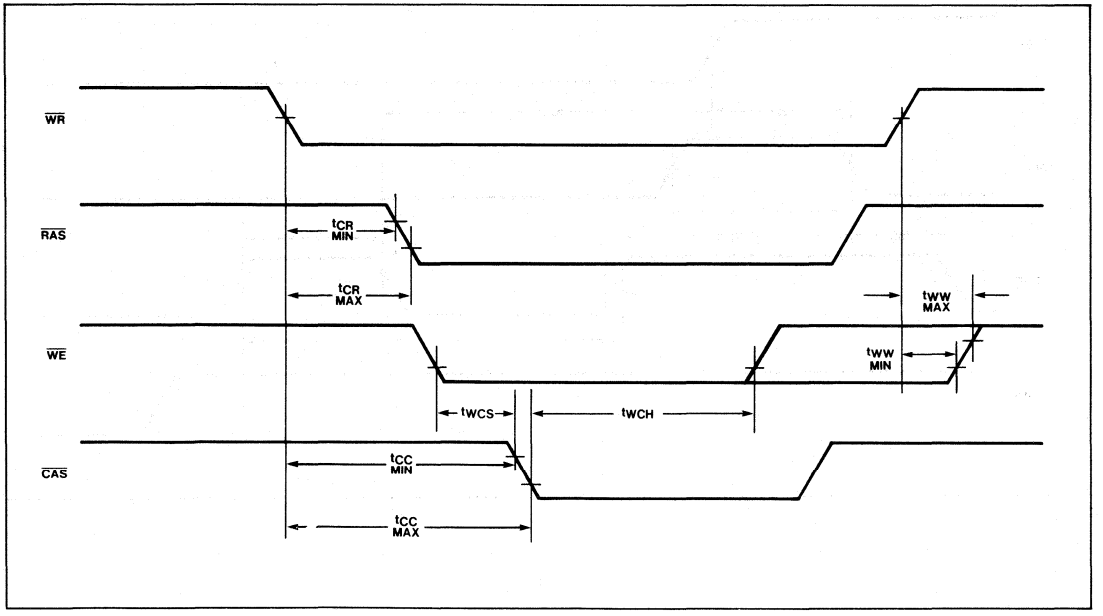

WAVEFORMS (cont'd)

Read or Write Followed By External Refresh

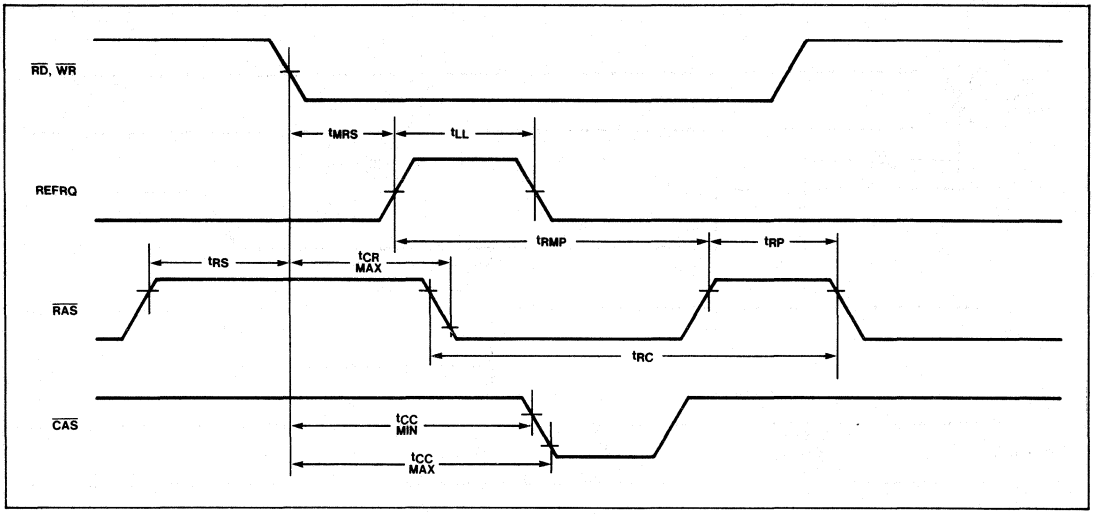

External Refresh Followed By Read or Write

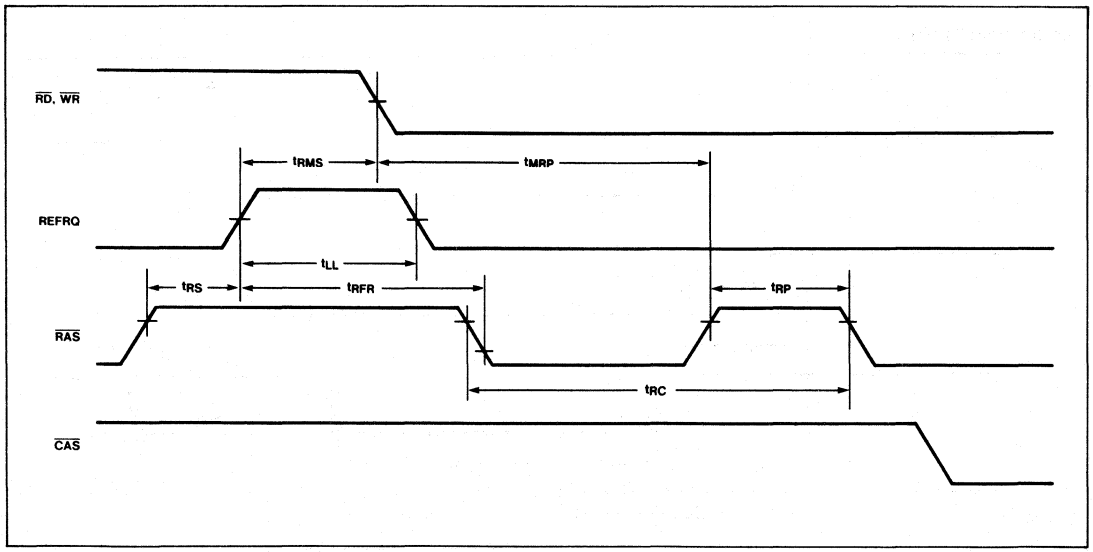

WAVEFORMS (cont'd)

Clock And System Timing

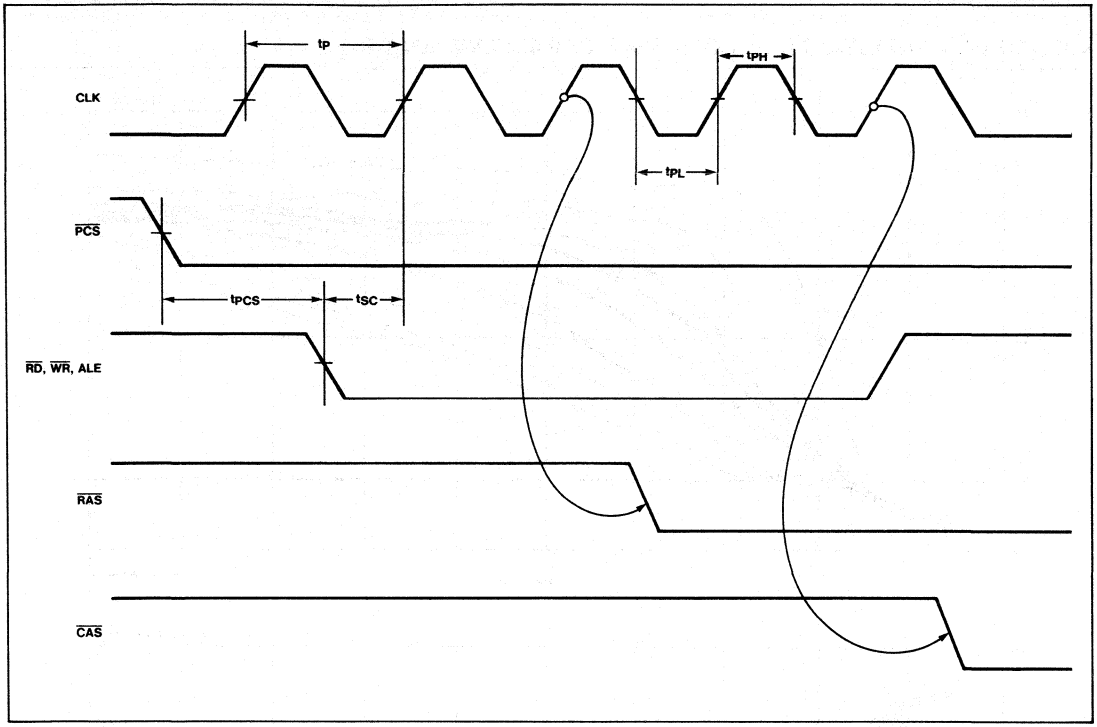

Table 2 8203 Output Loading. All specifications are for the Test Load unless otherwise noted.

Pin	Test Load
$\overline{SACK}$, $\overline{XACK}$	C_L = 30 pF
$\overline{OUT}_0$-$\overline{OUT}_6$	C_L = 160 pF
$\overline{RAS}_0$-$\overline{RAS}_3$	C_L = 60 pF
$\overline{WE}$	C_L = 224 pF
$\overline{CAS}$	C_L = 320 pF

NOTES:

1. t_{SC} is a reference point only. ALE, $\overline{RD}$, $\overline{WR}$, and REFRQ inputs do not have to be externally synchronized to 8203 clock.
2. If t_{RS} min and t_{MRS} min are met then t_{CA}, t_{CR}, and t_{CC} are valid, otherwise t_{CS} is valid.
3. t_{ASR}, t_{RAH}, t_{ASC}, t_{CAH}, and t_{RSH} depend upon B0-B1 and CPU address remaining stable throughout the memory cycle. The address inputs are not latched by the 8203.
4. For back-to-back refresh cycles, t_{RC} max = 13tp
5. t_{RC} max is valid only if t_{RMP} min is met (READ, WRITE followed by REFRESH) or t_{MRP} min is met (REFRESH followed by READ, WRITE).
6. t_{RFR} is valid only if t_{RS} min and t_{RMS} min are met.
7. t_{XW} min applies when $\overline{RD}$, $\overline{WR}$ has already gone high. Otherwise $\overline{XACK}$ follows $\overline{RD}$, $\overline{WR}$.
8. $\overline{WE}$ goes high according to t_{WCH} or t_{WW}, whichever occurs first.

A.C. TESTING LOAD CIRCUIT

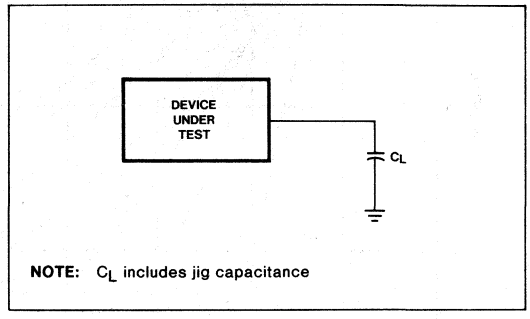

NOTE: C_L includes jig capacitance

The typical rising and falling characteristic curves for the $\overline{OUT}$, $\overline{RAS}$, $\overline{CAS}$ and $\overline{WE}$ output buffers can be used to determine the effects of capacitive loading on the A.C. Timing Parameters. Using this design tool in conjunction with the timing waveforms, the designer can determine typical timing shifts based on system capacitive load.

A.C. CHARACTERISTICS FOR DIFFERENT CAPACITIVE LOADS

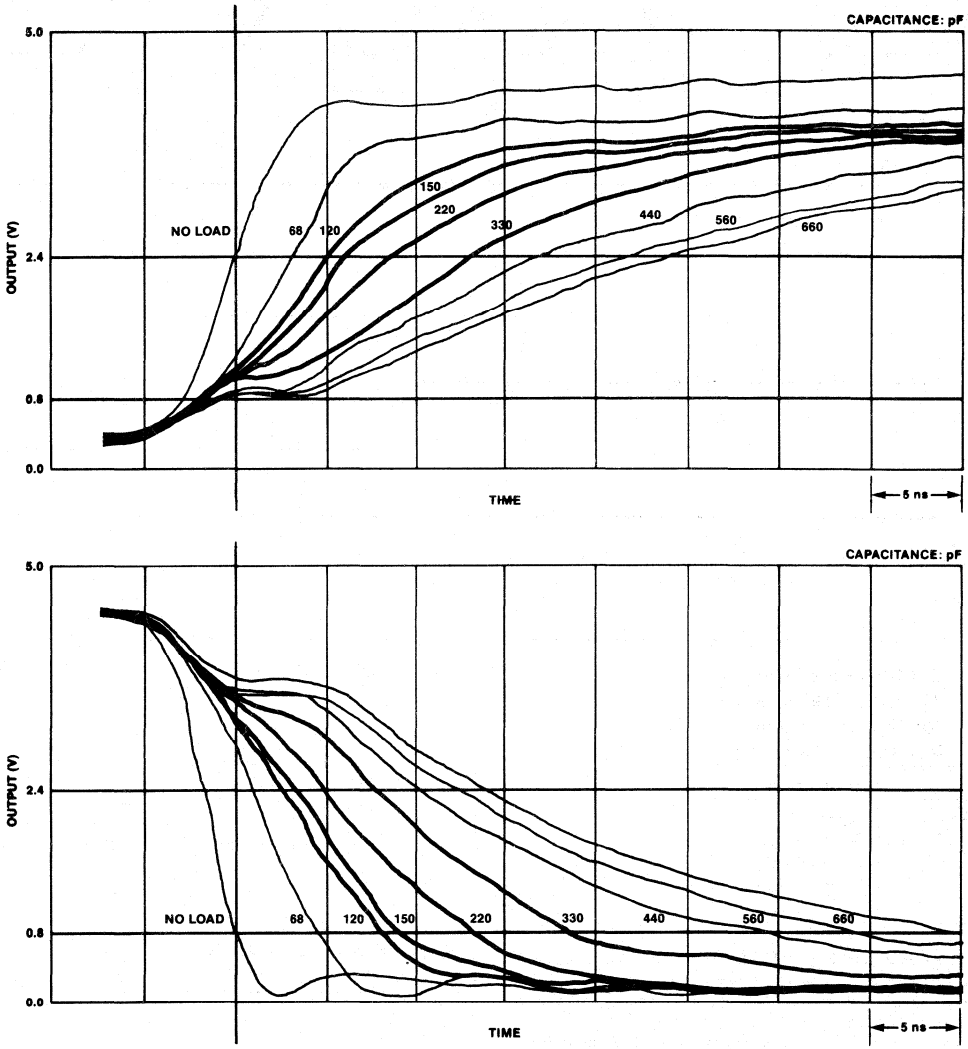

NOTE:
Use the Test Load as the base capacitance for estimating timing shifts for system critical timing parameters.

MEASUREMENT CONDITIONS:

T_A = 25°C
V_{CC} = +5V
t_p = 50 ns

Pins not measured are loaded with the Test Load capacitance

Example: Find the effect on t_{CR} and t_{CC} using 32 2164 Dynamic RAMs configured in 2 banks.

1. Determine the typical RAS and CAS capacitance:
   From the data sheet RAS = 5 pF and CAS = 5 pF.
   ∴ RAS load = 80 pF + board capacitance.
   CAS load = 160 pF + board capacitance.
   Assume 2 pF/in (trace length) for board capacitance and for this example 4 inches for RAS and 8 inches for CAS.
2. From the waveform diagrams, we determine that the falling edge timing is needed for t_{CR} and t_{CC}. Next find the curve that *best* approximates the test load; i.e., 68 pF for RAS and 330 pF for CAS.
3. If we use 88 pF for RAS loading, then t_{CR} (min.) spec should be increased by about 1 ns, and t_{CR} (max.) spec should be increased by *about* 2 ns. Similarly if we use 176 pF for CAS, then t_{CC} (min.) should decrease by 3 ns and t_{CC} (max.) should decrease by about 7 ns.

8206
ERROR DETECTION AND CORRECTION UNIT

- **Detects and Corrects All Single Bit Errors**
- **Detects All Double Bit and Most Multiple Bit Errors**
- **52 ns Maximum for Detection; 67 ns Maximum for Correction (16 Bit System)**
- **Expandable to Handle 80 Bit Memories**
- **Syndrome Outputs for Error Logging**
- **Separate Input and Output Busses—No Timing Strobes Required**
- **Supports Reads With and Without Correction, Writes, Partial (Byte) Writes, and Read-Modify-Writes**
- **HMOS Technology for Low Power**
- **68 Pin Leadless JEDEC Package**
- **Single +5V Supply**

The HMOS 8206 Error Detection and Correction Unit is a high-speed device that provides error detection and correction for memory systems (static and dynamic) requiring high reliability and performance. Each 8206 handles 8 or 16 data bits and up to 8 check bits. 8206's can be cascaded to provide correction and detection for up to 80 bits of data. Other 8206 features include the ability to handle byte writes, memory initialization, and error logging.

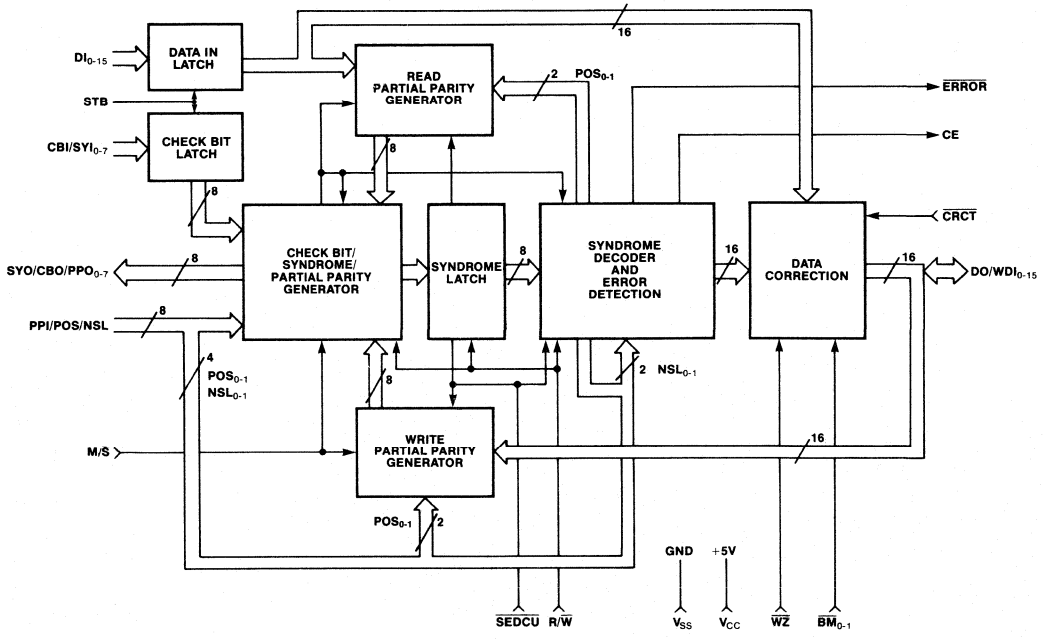

Figure 1. 8206 Block Diagram

Table 1. Pin Description

Symbol	Pin No.	Type	Name and Function
DI_{0-15}	1, 68-61, 59-53	I	**Data In:** These inputs accept a 16 bit data word from RAM for error detection and/or correction.
CBI/SYI_0 CBI/SYI_1 CBI/SYI_2 CBI/SYI_3 CBI/SYI_4 CBI/SYI_5 CBI/SYI_6 CBI/SYI_7	5 6 7 8 9 10 11 12	I I I I I I I I	**Check Bits In/Syndrome In:** In a single 8206 system, or in the master in a multi-8206 system, these inputs accept the check bits (5 to 8) from the RAM. In a single 8206 16 bit system, CBI_{0-5} are used. In slave 8206's these inputs accept the syndrome from the master.
DO/WDI_0 DO/WDI_1 DO/WDI_2 DO/WDI_3 DO/WDI_4 DO/WDI_5 DO/WDI_6 DO/WDI_7 DO/WDI_8 DO/WDI_9 DO/WDI_{10} DO/WDI_{11} DO/WDI_{12} DO/WDI_{13} DO/WDI_{14} DO/WDI_{15}	51 50 49 48 47 46 45 44 42 41 40 39 38 37 36 35	I/O I/O I/O I/O I/O I/O I/O I/O I/O I/O I/O I/O I/O I/O I/O I/O	**Data Out/Write Data In:** In a read cycle, data accepted by DI_{0-15} appears at these outputs corrected if $\overline{CRCT}$ is low, or uncorrected if $\overline{CRCT}$ is high. The $\overline{BM}$ inputs must be high to enable the output buffers during the read cycle. In a write cycle, data to be written into the RAM is accepted by these inputs for computing the write check bits. In a partial-write cycle, the byte not to be modified appears at either DO_{0-7} if $\overline{BM}_0$ is high, or DO_{8-15} if $\overline{BM}_1$ is high, for writing to the RAM. When $\overline{WZ}$ is active, it causes the 8206 to output all zeros at DO_{0-15}, with the proper write check bits on CBO.
$SYO/CBO/PPO_0$ $SYO/CBO/PPO_1$ $SYO/CBO/PPO_2$ $SYO/CBO/PPO_3$ $SYO/CBO/PPO_4$ $SYO/CBO/PPO_5$ $SYO/CBO/PPO_6$ $SYO/CBO/PPO_7$	23 24 25 27 28 29 30 31	O O O O O O O O	**Syndrome Out/Check Bits Out/Partial Parity Out:** In a single 8206 system, or in the master in a multi-8206 system, the syndrome appears at these outputs during a read. During a write, the write check bits appear. In slave 8206's the partial parity bits used by the master appear at these outputs. The syndrome is latched (during read-modify-writes) by $R/\overline{W}$ going low.
PPI_0/POS_0 PPI_1/POS_1	13 14	I I	**Partial Parity In/Position:** In the master in a multi-8206 system, these inputs accept partial parity bits 0 and 1 from the slaves. In a slave 8206 these inputs inform it of its position within the system (1 to 4). Not used in a single 8206 system.
PPI_2/NSL_0 PPI_3/NSL_1	15 16	I I	**Partial Parity In/Number of Slaves:** In the master in a multi-8206 system, these inputs accept partial parity bits 2 and 3 from the slaves. In a multi-8206 system these inputs are used in slave number 1 to tell it the total number of slaves in the system (1 to 4). Not used in other slaves or in a single 8206 system.
PPI_4/CE	17	I/O	**Partial Parity In/Correctable Error:** In the master in a multi-8206 system this pin accepts partial parity bit 4. In slave number 1 only, or in a single 8206 system, this pin outputs the correctable error flag. CE is latched by $R/\overline{W}$ going low. Not used in other slaves.
PPI_5 PPI_6 PPI_7	18 19 20	I I I	**Partial Parity In:** In the master in a multi-8206 system these pins accept partial parity bits 5 to 7. The number of partial parity bits equals the number of check bits. Not used in single 8206 systems or in slaves.
$\overline{ERROR}$	22	O	**Error:** This pin outputs the error flag in a single 8206 system or in the master of a multi-8206 system. It is latched by $R/\overline{W}$ going low. Not used in slaves.
$\overline{CRCT}$	52	I	**Correct:** When low this pin causes data correction during a read or read-modify-write cycle. When high, it causes error correction to be disabled, although error checking is still enabled.
STB	2	I	**Strobe:** STB is an input control used to strobe data at the DI inputs and check-bits at the CBI/SYI inputs. The signal is active high to admit the inputs. The signals are latched by the high-to-low transition of STB.

Table 1. Pin Description (Continued)

Symbol	Pin No.	Type	Name and Function
$\overline{BM_0}$ $\overline{BM_1}$	33 32	I I	**Byte Marks:** When high, the Data Out pins are enabled for a read cycle. When low, the Data Out buffers are tristated for a write cycle. $\overline{BM_0}$ controls DO_{0-7}, while $\overline{BM_1}$ controls DO_{8-15}. In partial (byte) writes, the byte mark input is low for the new byte to be written.
R/$\overline{W}$	21	I	**Read/Write:** When high this pin causes the 8206 to perform detection and correction (if $\overline{CRCT}$ is low). When low, it causes the 8206 to generate check bits. On the high-to-low transition the syndrome is latched internally for read-modify-write cycles.
$\overline{WZ}$	34	I	**Write Zero:** When low this input overrides the $\overline{BM}_{0-1}$ and R/$\overline{W}$ inputs to cause the 8206 to output all zeros at DO_{0-15} with the corresponding check bits at CBO_{0-7}. Used for memory initialization.
M/$\overline{S}$	4	I	**Master/Slave:** Input tells the 8206 whether it is a master (high) or a slave (low).
$\overline{SEDCU}$	3	I	**Single EDC Unit:** Input tells the master whether it is operating as a single 8206 (low) or as the master in a multi-8206 system (high). Not used in slaves.
V_{CC}	60	I	**Power Supply:** +5V
V_{SS}	26, 43	I	**Ground**

FUNCTIONAL DESCRIPTION

The 8206 Error Detection and Correction Unit provides greater memory system reliability through its ability to detect and correct memory errors. It is a single chip device that can detect and correct all single bit errors and detect all double bit and some higher multiple bit errors. Some other odd multiple bit errors (e.g., 5 bits in error) are interpreted as single bit errors, and the CE flag is raised. While some even multiple bit errors (e.g., 4 bits in error) are interpreted as no error, most are detected as double bit errors. This error handling is a function of the number of check bits used by the 8206 (see Figure 2) and the specific Hamming code used. Errors in check bits are not distinguished from errors in a word.

For more information on error correction codes, see Intel Application Notes AP-46 and AP-73.

DATA WORD BITS	CHECK BITS
8	5
16	6
24	6
32	7
40	7
48	8
56	8
64	8
72	8
80	8

Figure 2. Number of Check Bits Used by 8206

A single 8206 handles 8 or 16 bits of data, and up to 5 8206's can be cascaded in order to handle data paths of 80 bits. For a single 8206 8 bit system, the DI_{8-15}, DO/WDI_{8-15} and $\overline{BM}_1$ inputs are grounded. See the Multi-Chip systems section for information on 24-80 bit systems.

The 8206 has a "flow through" architecture. It supports two kinds of error correction architecture: 1) Flow-through, or correct-always; and 2) Parallel, or check-only. There are two separate 16-pin busses, one to accept data from the RAM (DI) and the other to deliver corrected data to the system bus (DO/WDI). The logic is entirely combinatorial during a read cycle. This is in contrast to an architecture with only one bus, with bidirectional bus drivers that must first read the data and then be turned around to output the corrected data. The latter architecture typically requires additional hardware (latches and/or transceivers) and may be slower in a system due to timing skews of control signals.

READ CYCLE

With the R/$\overline{W}$ pin high, data is received from the RAM outputs into the DI pins where it is optionally latched by the STB signal. Check bits are generated from the data bits and compared to the check bits read from the RAM into the CBI pins. If an error is detected the $\overline{ERROR}$ flag is activated and the correctable error flag (CE) is used to inform the system whether the error was correctable or not. With the $\overline{BM}$ inputs high, the word appears corrected at the DO pins if the error was correctable, or unmodified if the error was uncorrectable.

If more than one 8206 is being used, then the check bits are read by the master. The slaves generate a partial parity output (PPO) and pass it to the master. The master 8206 then generates and returns the syndrome to the slaves (SYO) for correction of the data.

The 8206 may alternatively be used in a "check-only" mode with the $\overline{CRCT}$ pin left high. With the correction facility turned off, the propagation delay from memory outputs to 8206 outputs is significantly shortened. In this mode the 8206 issues an $\overline{ERROR}$ flag to the CPU, which can then perform one of several options: lengthen the current cycle for correction, restart the instruction, perform a diagnostic routine, etc.

A syndrome word, five to eight bits in length and containing all necessary information about the existence and location of an error, is made available to the system at the SYO_{0-7} pins. Error logging may be accomplished by latching the syndrome and the memory address of the word in error.

WRITE CYCLE

For a full write, in which an entire word is written to memory, the data is written directly to the RAM, bypassing the 8206. The same data enters the 8206 through the WDI pins where check bits are generated. The Byte Mark inputs must be low to tristate the DO drivers. The check bits, 5 to 8 in number, are then written to the RAM through the CBO pins for storage along with the data word. In a multi-chip system, the master writes the check bits using partial parity information from the slaves.

In a partial write, part of the data word is overwritten, and part is retained in memory. This is accomplished by performing a read-modify-write cycle. The complete old word is read into the 8206 and corrected, with the syndrome internally latched by R/$\overline{W}$ going low. Only that part of the word not to be modified is output onto the DO pins, as controlled by the Byte Mark inputs. That portion of the word to be overwritten is supplied by the system bus. The 8206 then calculates check bits for the new word, using the byte from the previous read and the new byte from the system bus, and writes them to the memory.

READ-MODIFY-WRITE CYCLES

Upon detection of an error the 8206 may be used to correct the bit in error in memory. This reduces the probability of getting multiple-bit errors in subsequent read cycles. This correction is handled by executing read-modify-write cycles.

The read-modify-write cycle is controlled by the R/$\overline{W}$ input. After (during) the read cycle, the system dynamic RAM controller or CPU examines the 8206 $\overline{ERROR}$ and CE outputs to determine if a correctable error occurred. If it did, the dynamic RAM controller or CPU forces R/$\overline{W}$ low, telling the 8206 to latch the generated syndrome and drive the corrected check bits onto the CBO outputs. The corrected data is available on the DO pins. The DRAM controller then writes the corrected data and corresponding check bits into memory.

The 8206 may be used to perform read-modify-writes in one or two RAM cycles. If it is done in two cycles, the 8206 latches are used to hold the data and check bits from the read cycle to be used in the following write cycle. The Intel 8207 Advanced Dynamic RAM controller allows read-modify-write cycles in one memory cycle. See the System Environment section.

INITIALIZATION

A memory system operating with ECC requires some form of initialization at system power-up in order to set valid data and check bit information in memory. The 8206 supports memory initialization by the write zero function. By activating the $\overline{WZ}$ pin, the 8206 will write a data pattern of zeros and the associated check bits in the current write cycle. By thus writing to all memory at power-up, a controller can set memory to valid data and check bits. Massive memory failure, as signified by both data and check bits all ones or zeros, will be detected as an uncorrectable error.

MULTI-CHIP SYSTEMS

A single 8206 handles 8 or 16 bits of data and 5 or 6 check bits, respectively. Up to 5 8206's can be cascaded for 80 bit memories with 8 check bits.

When cascaded, one 8206 operates as a master, and all others as slaves. As an example, during a read cycle in a 32 bit system with one master and one slave, the slave calculates parity on its portion of the word—"partial parity"—and presents it to the master through the PPO pins. The master combines the partial parity from the slave with the parity it calculated from its own portion of the word to generate the syndrome. The syndrome is then returned by the master to the slave for error correction. In systems with more than one slave the above description continues to apply, except that the partial parity outputs of the slaves must be XOR'd externally. Figure 3 shows the necessary external logic for multi-chip systems. Write and read-modify-write cycles are carried out analogously. See the System Operation section for multi-chip wiring diagrams.

There are several pins used to define whether the 8206 will operate as a master or a slave. Tables 2 and 3 illustrate how these pins are tied.

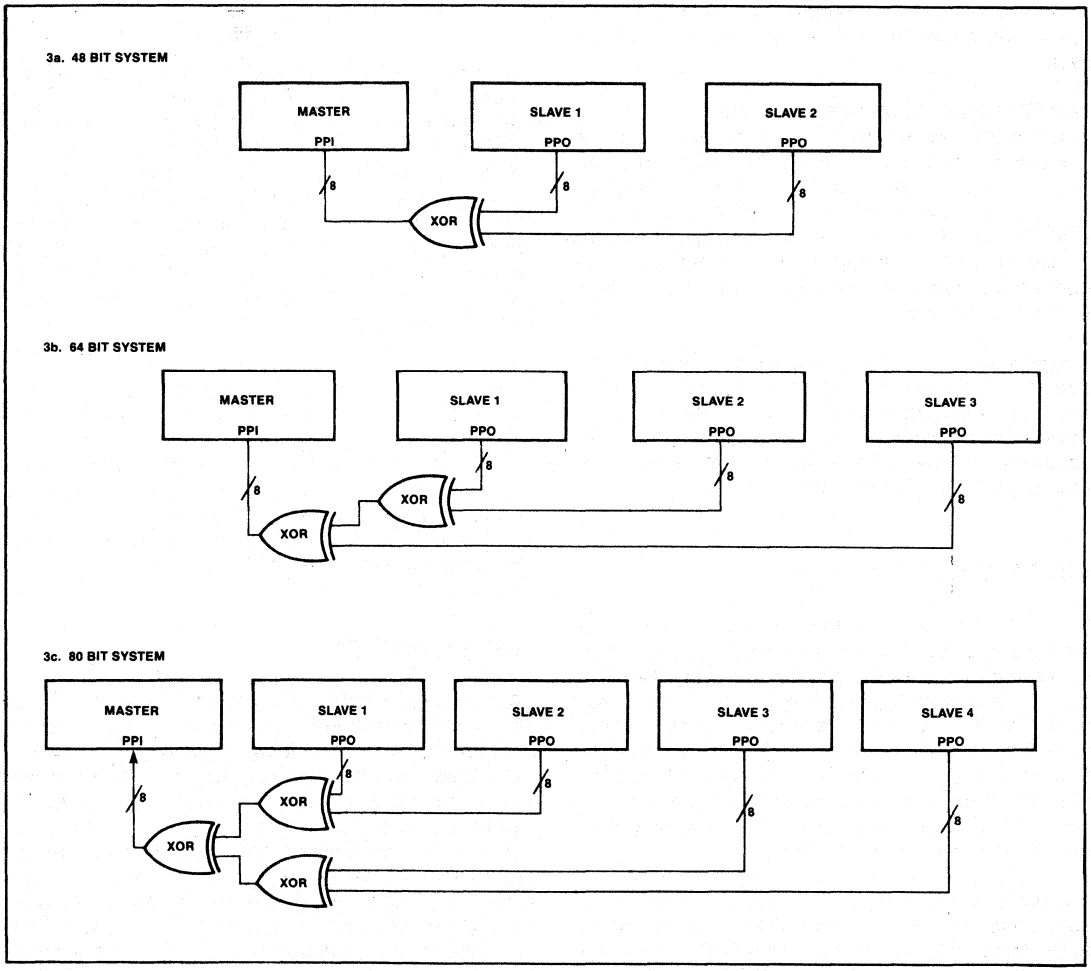

Figure 3. External Logic For Multi-Chip Systems

Table 2. Master/Slave Pin Assignments

Pin No.	Pin Name	Master	Slave 1	Slave 2	Slave 3	Slave 4
4	M/$\overline{S}$	+5V	Gnd	Gnd	Gnd	Gnd
3	$\overline{SEDCU}$	+5V	+5V	+5V	+5V	+5V
13	PPI_0/POS_0	PPI	Gnd	+5V	Gnd	+5V
14	PPI_1/POS_1	PPI	Gnd	Gnd	+5V	+5V
15	PPI_2/NSL_0	PPI	*	+5V	+5V	+5V
16	PPI_3/NSL_1	PPI	*	+5V	+5V	+5V

*See Table 3.

NOTE:
Pins 13, 14, 15, 16 have internal pull-up resistors and may be left as N.C. where specified as connecting to +5V.

Table 3. NSL Pin Assignments for Slave 1

	Number of Slaves			
Pin	1	2	3	4
PPI_2/NSL_0	Gnd	+5V	Gnd	+5V
PPI_3/NSL_1	Gnd	Gnd	+5V	+5V

The timing specifications for multi-chip systems must be calculated to take account of the external XOR gating in 3, 4, and 5-chip systems. Let tXOR be the delay for a single external TTL XOR gate. Then the following equations show how to calculate the relevant timing parameters for 2-chip (n=0), 3-chip (n=1), 4-chip (n=2), and 5-chip (n=2) systems:

Data-in to corrected data-out (read cycle) =
TDVSV + TPVSV + TSVQV + ntXOR

Data-in to error flag (read cycle) =
TDVSV + TPVEV + ntXOR

Data-in to correctable error flag (read cycle) =
TDVSV + TPVSV + TSVCV + ntXOR

Write data to check-bits valid (full write cycle) =
TQVQV + TPVSV + ntXOR

Data-in to check-bits valid (read-mod-write cycle) =
TDVSV + TPVSV + TSVQV + TQVQV + TPVSV + 2ntXOR

Data-in to check-bits valid (non-correcting read-modify-write cycle) =
TDVQU + TQVQV + TPVSV + ntXOR

HAMMING CODE

The 8206 uses a modified Hamming code which was optimized for multi-chip EDCU systems. The code is such that partial parity is computed by all 8206's in parallel. No 8206 requires more time for propagation through logic levels than any other one, and hence no one device becomes a bottleneck in the parity operation. However, one or two levels of external TTL XOR gates are required in systems with three to five chips. The code appears in Table 4. The check bits are derived from the table by XORing or XNORing together the bits indicated by 'X's in each row corresponding to a check bit. For example, check bit 0 in the MASTER for data word 1000110101101011 will be "0." It should be noted that the 8206 will detect the gross-error condition of all lows or all highs.

Error correction is accomplished by identifying the bad bit and inverting it. Table 4 can also be used as an error syndrome table by replacing the 'X's with '1's. Each column then represents a different syndrome word, and by locating the column corresponding to a particular syndrome the bit to be corrected may be identified. If the syndrome cannot be located then the error cannot be corrected. For example, if the syndrome word is 00110111, the bit to be corrected is bit 5 in the slave one data word (bit 21).

The syndrome decoding is also summarized in Table 5, which can be used for error logging. By finding the appropriate syndrome word (starting with bit zero, the least significant bit), the result is either: 1) no error; 2) an identified (correctable) single bit error; 3) a double bit error; or 4) a multi-bit uncorrectable error.

Table 4. Modified Hamming Code Check Bit Generation

Check bits are generated by XOR'ing (except for the CB0 and CB1 data bits, which are XNOR'ed in the Master) the data bits in the rows corresponding to the check bits. Note there are 6 check bits in a 16-bit system, 7 in a 32-bit system, and 8 in 48-or-more-bit systems.

BYTE NUMBER		0								1								OPERATION	2								3								OPERATION
BIT NUMBER		0	1	2	3	4	5	6	7	0	1	2	3	4	5	6	7		0	1	2	3	4	5	6	7	0	1	2	3	4	5	6	7	
CHECK BITS	CB0 =	x	x	-	x	-	x	x	-	x	-	-	x	-	x	-	-	XNOR	-	x	x	x	-	x	x	-		-	x	x	-	-	x	-	-	XOR
	CB1 =	x	-	x	-	-	x	-	x	-	x	-	x	x	-	x	-	XNOR	x	x	x	-	-	x	-	x		x	x	-	-	-	-	-	x	XOR
	CB2 =	-	x	x	-	x	-	x	x	-	-	x	-	x	-	-	x	XOR	-	x	x	x	-	x	x	x		-	-	x	x	-	-	-	-	XOR
	CB3 =	x	x	x	x	x	-	-	-	x	x	x	-	-	-	-	-	XOR	x	x	-	-	x	-	x	x		x	-	-	x	x	-	-	-	XOR
	CB4 =	-	-	-	x	x	x	x	x	-	-	-	-	-	x	x	x	XOR	x	x	-	-	x	x	x	x		-	-	-	-	x	-	x	-	XOR
	CB5 =	-	-	-	-	-	-	-	-	x	x	x	x	x	x	x	x	XOR	-	-	-	x	x	x	x	x		-	-	-	-	-	x	x	x	XOR
	CB6 =	-	-	-	-	-	-	-	-	-	-	-	-	-	-	-	-	XOR	-	-	-	-	-	-	-	-		x	x	x	x	x	x	x	x	XOR
	CB7 =	-	-	-	-	-	-	-	-	-	-	-	-	-	-	-	-	XOR	-	-	-	-	-	-	-	-		-	-	-	-	-	-	-	-	XOR
DATA BITS		0	0	0	0	0	0	0	0	0	0	1	1	1	1	1	1		1	1	1	1	2	2	2	2	2	2	2	2	2	3	3	3	
		0	1	2	3	4	5	6	7	8	9	0	1	2	3	4	5		6	7	8	9	0	1	2	3	4	5	6	7	8	9	0	1	

16 BIT OR MASTER | SLAVE #1

BYTE NUMBER		4								5								6								7								8								9								OPERATION
BIT NUMBER		0	1	2	3	4	5	6	7	0	1	2	3	4	5	6	7	0	1	2	3	4	5	6	7	0	1	2	3	4	5	6	7	0	1	2	3	4	5	6	7	0	1	2	3	4	5	6	7	
CHECK BITS	CB0 =	x	x	-	x	-	x	x	-	x	-	-	x	-	x	-	-	x	-	x	x	-	-	x	-	x	-	x	x	-	-	x	-	-	x	x	-	-	x	-	-	-	x	x	-	-	x	-	-	XOR
	CB1 =	x	-	x	-	-	x	-	x	-	x	-	x	x	-	x	-	-	x	x	-	-	-	x	-	x	-	x	x	-	-	-	-	-	-	x	x	-	-	x	x	-	-	x	x	-	-	-	-	XOR
	CB2 =	-	x	x	-	x	-	x	x	-	-	x	-	x	-	-	x	-	x	x	x	-	x	x	-	x	x	-	-	x	-	-	x	-	-	x	-	-	x	-	x	-	-	x	x	-	-	x	-	x	XOR
	CB3 =	x	x	x	x	x	-	-	-	x	x	x	-	-	-	-	-	x	-	x	-	-	x	x	-	x	x	-	-	x	-	-	x	-	x	x	x	x	-	-	x	x	-	-	x	x	-	-	x	-	-	XOR
	CB4 =	-	-	-	x	x	x	x	x	-	-	-	-	-	x	x	x	-	-	-	x	x	x	x	x	-	-	-	-	x	x	x	x	-	x	x	-	-	-	x	x	x	x	x	-	-	-	-	x	-	XOR
	CB5 =	x	x	x	x	x	x	x	x	-	-	-	-	-	-	-	-	-	-	-	-	-	-	-	-	x	x	x	x	x	x	x	x	x	-	x	x	x	x	-	x	-	-	-	x	-	-	-	-	x	XOR
	CB6 =	x	x	x	x	x	x	x	x	-	-	-	-	-	-	-	-	x	x	x	x	x	x	x	x	-	-	-	-	-	-	-	-	x	x	-	-	x	x	x	x	-	-	-	-	-	x	-	x	-	XOR
	CB7 =	-	-	-	-	-	-	-	-	x	x	x	x	x	x	x	x	-	-	-	-	-	-	-	-	x	x	x	x	x	x	x	x	-	-	-	-	-	-	-	-	x	x	x	x	x	x	x	x	XOR
DATA BITS		3	3	3	3	3	3	3	3	4	4	4	4	4	4	4	4	4	4	5	5	5	5	5	5	5	5	5	5	6	6	6	6	6	6	6	7	7	7	7	7	7	7	7	7	7	7	7	7	
		2	3	4	5	6	7	8	9	0	1	2	3	4	5	6	7	8	9	0	1	2	3	4	5	6	7	8	9	0	1	2	3	4	5	6	7	8	9	0	1	2	3	4	5	6	7	8	9	

SLAVE #2 | SLAVE #3 | SLAVE #4

Table 5. Syndrome Decoding

Syndrome Bits 7 6 5 4	0 0 1 0 1 0 1 0 1 0 1 0 1 0 1 0 1 1 0 0 1 1 0 0 1 1 0 0 1 1 0 0 1 1 2 0 0 0 0 1 1 1 1 0 0 0 0 1 1 1 1 3 0 0 0 0 0 0 0 0 1 1 1 1 1 1 1 1
0 0 0 0	N CB0 CB1 D CB2 D D 18 CB3 D D 0 D 1 2 D
0 0 0 1	CB4 D D 5 D 6 7 D D 3 16 D 4 D D 17
0 0 1 0	CB5 D D 11 D 19 12 D D 8 9 D 10 D D 67
0 0 1 1	D 13 14 D 15 D D 21 20 D D 66 D 22 23 D
0 1 0 0	CB6 D D 25 D 26 49 D D 48 24 D 27 D D 50
0 1 0 1	D 52 55 D 51 D D 70 28 D D 65 D 53 54 D
0 1 1 0	D 29 31 D 64 D D 69 68 D D 32 D 33 34 D
0 1 1 1	30 D D 37 D 38 39 D D 35 71 D 36 D D U
1 0 0 0	CB7 D D 43 D 77 44 D D 40 41 D 42 D D U
1 0 0 1	D 45 46 D 47 D D 74 72 D D U D 73 U D
1 0 1 0	D 59 75 D 79 D D 58 60 D D 56 D U 57 D
1 0 1 1	63 D D 62 D U U D D U U D 61 D D U
1 1 0 0	D U U D U D D U 76 D D U D U U D
1 1 0 1	78 D D U D U U D D U U D U D D U
1 1 1 0	U D D U D U U D D U U D U D D U
1 1 1 1	D U U D U D D U U D D U D U U D

N = No Error
CBX = Error in Check Bit X
X = Error in Data Bit X
D = Double Bit Error
U = Uncorrectable Multi-Bit Error

SYSTEM ENVIRONMENT

The 8206 interface to a typical 32 bit memory system is illustrated in Figure 4. For larger systems, the partial parity bits from slaves two to four must be

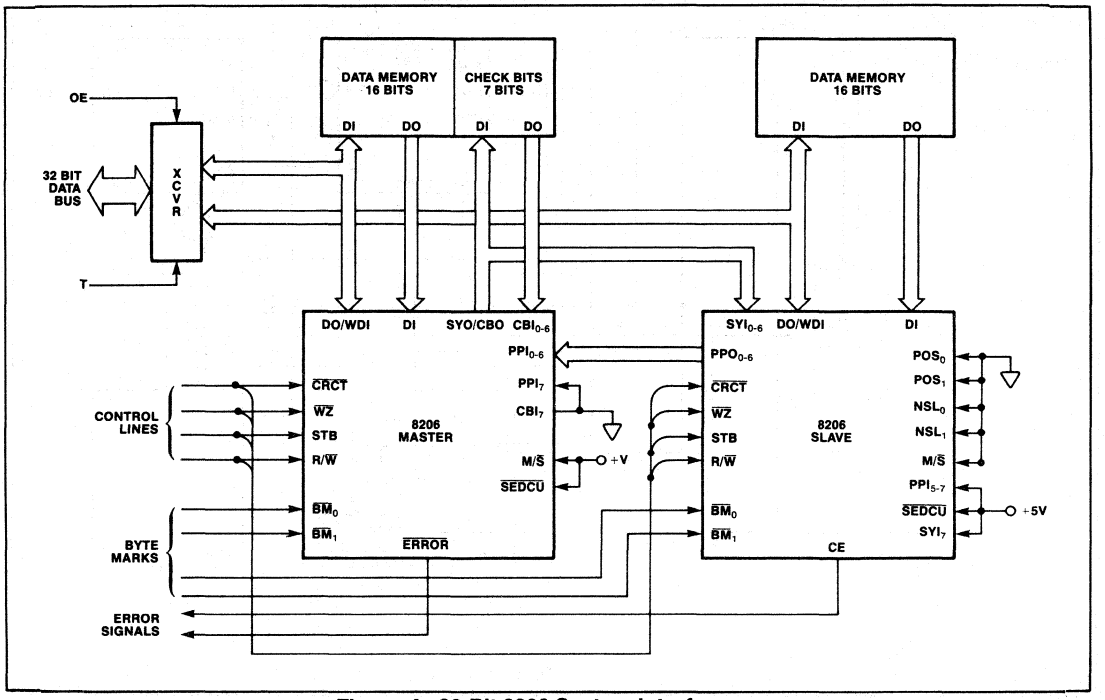

Figure 4. 32-Bit 8206 System Interface

AFN-01966A

XOR'ed externally, which calls for one level of XOR gating for three 8206's and two levels for four or five 8206's.

The 8206 is designed for direct connection to the Intel 8207 Advanced Dynamic RAM Controller, due to be sampled in the first quarter of 1982. The 8207 has the ability to perform dual port memory control, and Figure 5 illustrates a highly integrated dual port RAM implementation using the 8206 and 8207. The 8206/8207 combination permits such features as automatic scrubbing (correcting errors in memory during refresh), extending RAS and CAS timings for Read-Modify-Writes in single memory cycles, and automatic memory initialization upon reset. Together these two chips provide a complete dual-port, error-corrected dynamic RAM subsystem.

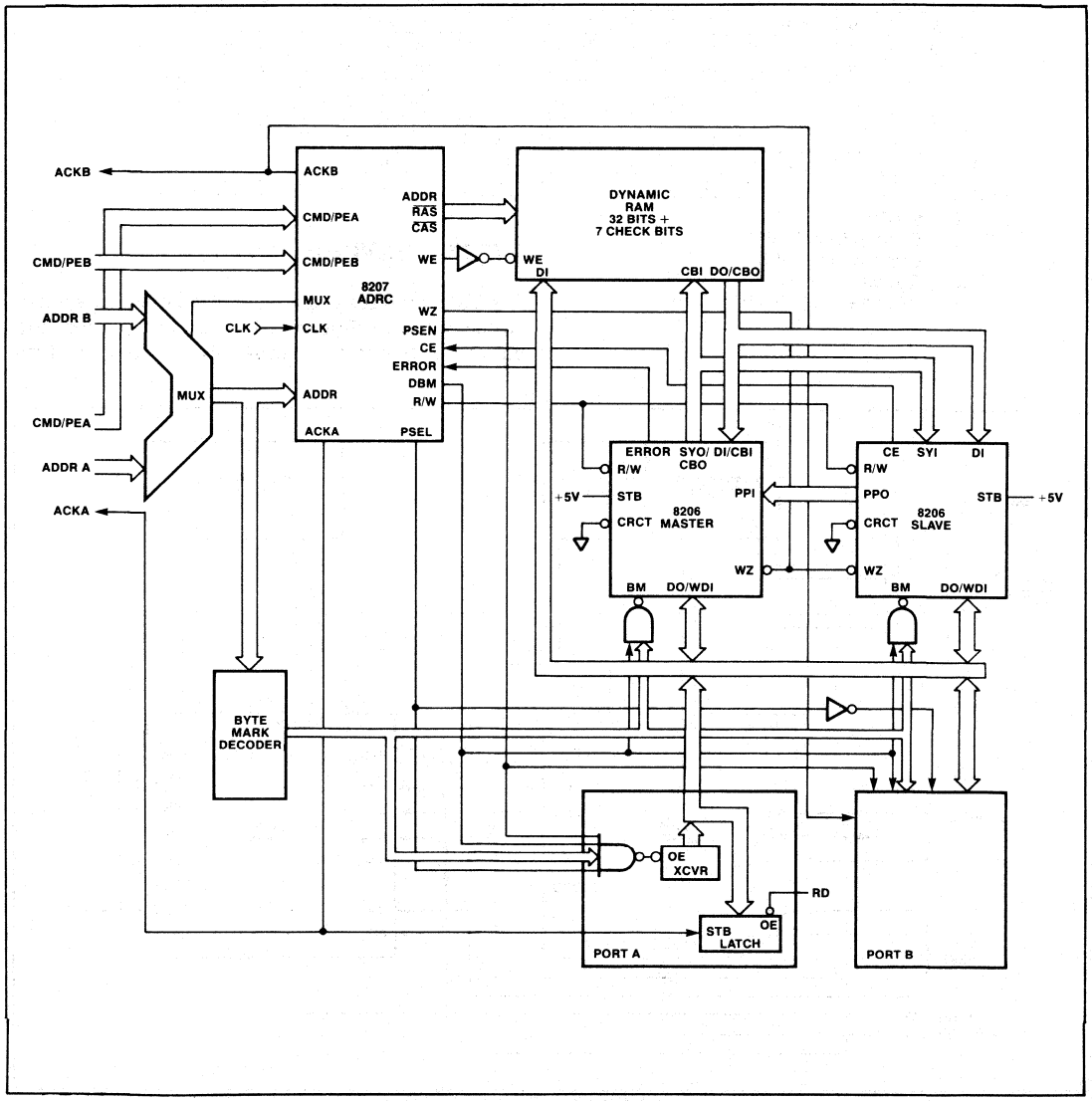

Figure 5. Dual Port RAM Subsystem with 8206/8207 (32-bit bus)

MEMORY BOARD TESTING

The 8206 lends itself to straightforward memory board testing with a minimum of hardware overhead. The following is a description of four common test modes and their implementation.

Mode 0—Read and write with error correction.
Implementation: This mode is the normal 8206 operating mode.

Mode 1—Read and write data with error correction disabled to allow test of data memory.
Implementation: This mode is performed with $\overline{CRCT}$ deactivated.

Mode 2—Read and write check bits with error correction disabled to allow test of check bits memory.
Implementation: Any pattern may be written into the check bits memory by judiciously choosing the proper data word to generate the desired check bits, through the use of the 8206 Hamming code. To read out the check bits it is first necessary to fill the data memory with all zeros, which may be done by activating $\overline{WZ}$ and incrementing memory addresses with $\overline{WE}$ to the check bits memory held inactive, and then performing ordinary reads. The check bits will then appear directly at the SYO outputs, with bits CB0 and CB1 inverted.

Mode 3—Write data, without altering or writing check bits, to allow the storage of bit combinations to cause error correction and detection.
Implementation: This mode is implemented by writing the desired word to memory with $\overline{WE}$ to the check bits array held inactive.

PACKAGE

The 8206 is packaged in a 68-pin, leadless JEDEC type A hermetic chip carrier. Figure 6 illustrates the package, and Figure 7 is the pinout.

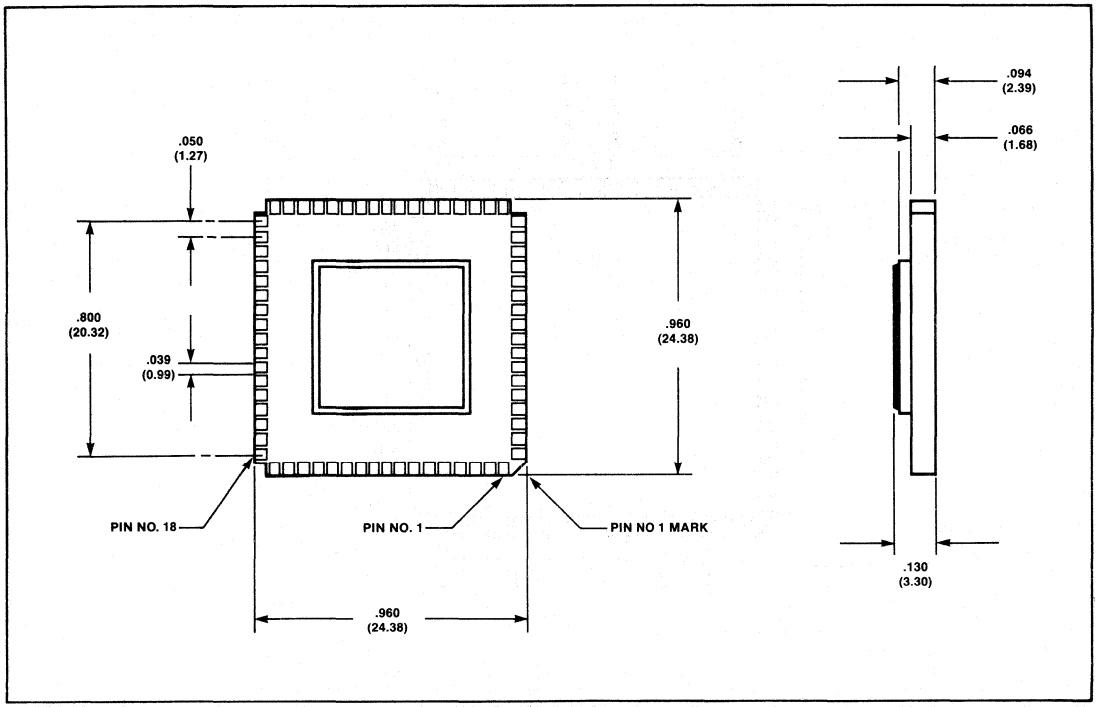

Figure 6. 8206 JEDEC Type A Package

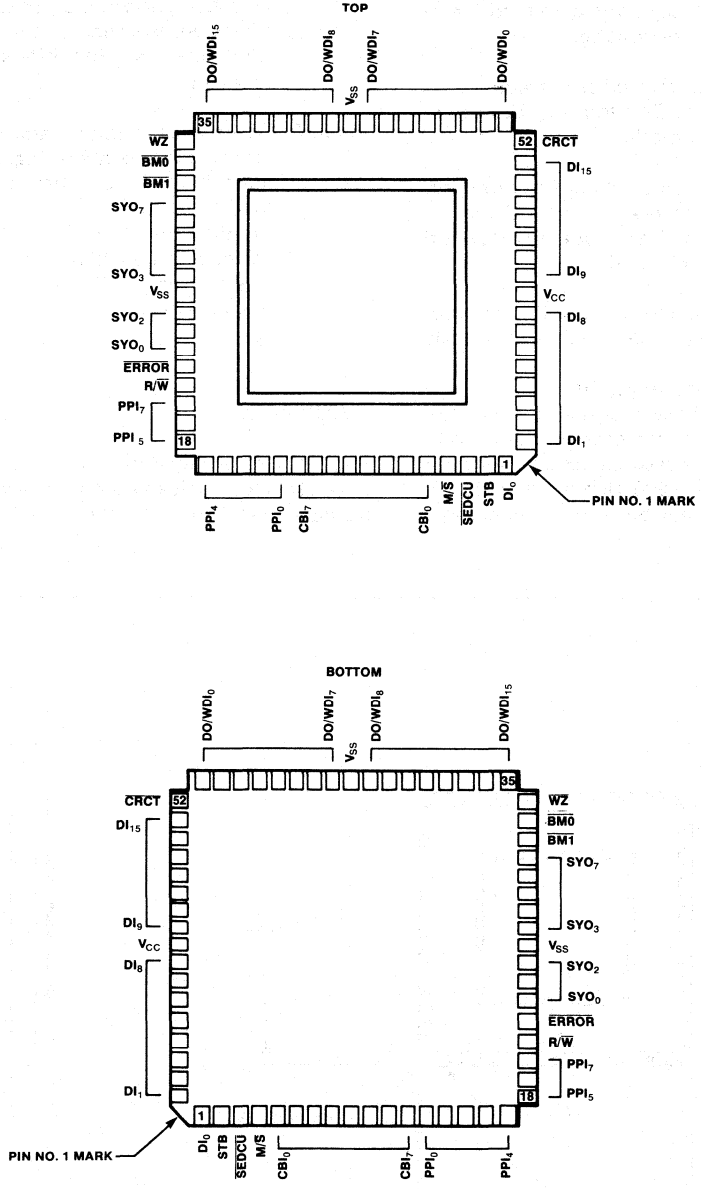

Figure 7. 8206 Pinout Diagram

AFN-01966A

ABSOLUTE MAXIMUM RATINGS*

Ambient Temperature Under Bias ..... 0°C to 70°C
Storage Temperature ..... −65°C to +150°C
Voltage On Any Pin
With Respect to Ground ..... −0.5V to +7V
Power Dissipation ..... 2.5 Watts

NOTE: Stresses above those listed under "Absolute Maximum Ratings" may cause permanent damage to the device. This is a stress rating only and functional operation of the device at these or any other conditions above those indicated in the operational sections of this specification is not implied. Exposure to absolute maximum rating conditions for extended periods may affect device reliability.

D.C. CHARACTERISTICS (T_A = 0°C to 70°C, V_{CC} = 5.0V ± 10%, V_{SS} = GND)

Symbol	Parameter	Min.	Max.	Unit	Test Conditions
I_{CC}	Power Supply Current —Single 8206 or Slave #1 —Master in Multi-Chip or Slaves #2, 3, 4		230 190	mA mA	
V_{IL}[1]	Input Low Voltage	−0.5	0.8	V	
V_{IH}[1]	Input High Voltage	2.0	V_{CC} + 0.5V	V	
V_{OL}	Output Low Voltage —DO —All Others		0.4 0.4	V V	I_{OL} = 8mA I_{OL} = 2.0mA
V_{OH}	Output High Voltage —DO, CBO —All Other Outputs	2.6 2.4		V V	I_{OH} = −2mA I_{OH} = −0.4mA
I_{LO}	I/O Leakage Current —PPI_4/CE —DO/WDI_{0-15}		± 20 ± 10	μA μA	$0.45V \leq V_{I/O} \leq V_{CC}$
I_{LI}	Input Leakage Current —$PPI_{0-3, 5-7}$, CBI_{6-7}, $\overline{SEDCU}$ —All Other Input Only Pins		± 20 ± 10	μA μA	$0V \leq V_{IN} \leq V_{CC}$

NOTES:
1. $\overline{SEDCU}$ (pin 3) and M/$\overline{S}$ (pin 4) are device strapping options and should be tied to V_{CC} or GND. V_{IH} min = V_{CC} −0.5V and V_{IL} max = 0.5V.
2. PPI_{0-7} (pins 13–20) and CBI_{6-7} (pins 11, 12) have internal pull-up resistors and if left unconnected will be pulled to V_{CC}.

A.C. TESTING INPUT, OUTPUT WAVEFORM

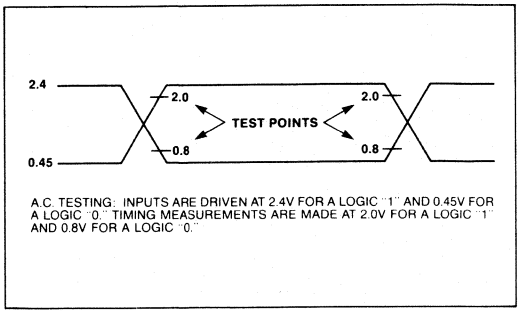

A.C. TESTING: INPUTS ARE DRIVEN AT 2.4V FOR A LOGIC "1" AND 0.45V FOR A LOGIC "0." TIMING MEASUREMENTS ARE MADE AT 2.0V FOR A LOGIC "1" AND 0.8V FOR A LOGIC "0."

A.C. TESTING LOAD CIRCUIT

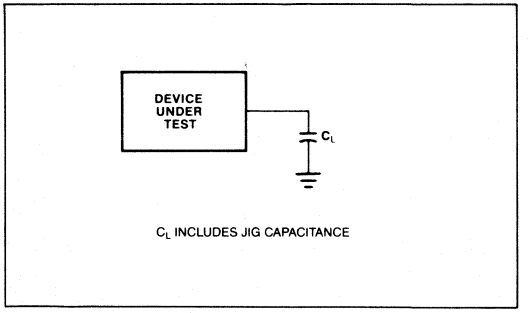

C_L INCLUDES JIG CAPACITANCE

A.C. CHARACTERISTICS (T_A = 0°C to 70°C, V_{CC} = +5V ± 10%, V_{SS} = 0V, C_L = 100pF; all times are in nsec.)

Symbol	Parameter	8206		8206-8		Notes
		Min.	Max.	Min.	Max.	
TRHEV	$\overline{ERROR}$ Valid from R/$\overline{W}$↑		25		34	
TRHCV	CE Valid from R/$\overline{W}$↑ (Single 8206)		44		59	
TRHQV	Corrected Data Valid from R/$\overline{W}$↑		49		66	1
TRVSV	SYO/CBO/PPO Valid from R/$\overline{W}$		42		56	1
TDVEV	$\overline{ERROR}$ Valid from Data/Check Bits In		52		70	
TDVCV	CE Valid from Data/Check Bits In		70		94	
TDVQV	Corrected Data Valid from Data/Check Bits In		67		90	
TDVSV	SYO/PPO Valid from Data/Check Bits In		55		74	
TBHQV	Corrected Data Access Time		32		43	
TDXQX	Hold Time from Data/check Bits In	0		0		1
TBLQZ	Corrected Data Float Delay	5	28	5	38	1
TSHIV	STB High to Data Valid	30		40		
TIVSL	Data/Check Bits In to STB↓ Set-up	0		0		
TSLIX	Data/Check Bits In from STB↓ Hold	20		30		
TPVEV	$\overline{ERROR}$ Valid from Partial Parity In		30		40	
TPVQV	Corrected Data (Master) from Partial Parity In		56		76	1
TPVSV	Syndrome/Check Bits Out from Partial Parity In		38		51	1
TSVQV	Corrected Data (Slave) Valid from Syndrome		51		69	
TSVCV	CE Valid from Syndrome (Slave number 1)		48		65	
TQVQV	Check Bits/Partial Parity Out from Write Data In		59		80	1
TRHSX	Check Bits/Partial Parity Out from R/W, $\overline{WZ}$ Hold	0		0		1
TRLSX	Syndrome Out from R/$\overline{W}$ Hold	0		0		
TQXQX	Hold Time from Write Data In	0		0		1
TSVRL	Syndrome Out to R/$\overline{W}$↓ Set-up	17		22		
TDVRL	Data/Check Bits In to R/$\overline{W}$ Set-up	34		46		1
TDVQU	Uncorrected Data Out from Data In		32		43	
TTVQV	Corrected Data Out from $\overline{CRCT}$↓		30		40	
TWLQL	$\overline{WZ}$↓ to Zero Out		30		40	
TWHQX	Zero Out from $\overline{WZ}$↑ Hold	0		0		

NOTE
1. A.C. Test Levels for CBO and DO are 2.4V and 0.8V.

WAVEFORMS

READ—16 BIT ONLY

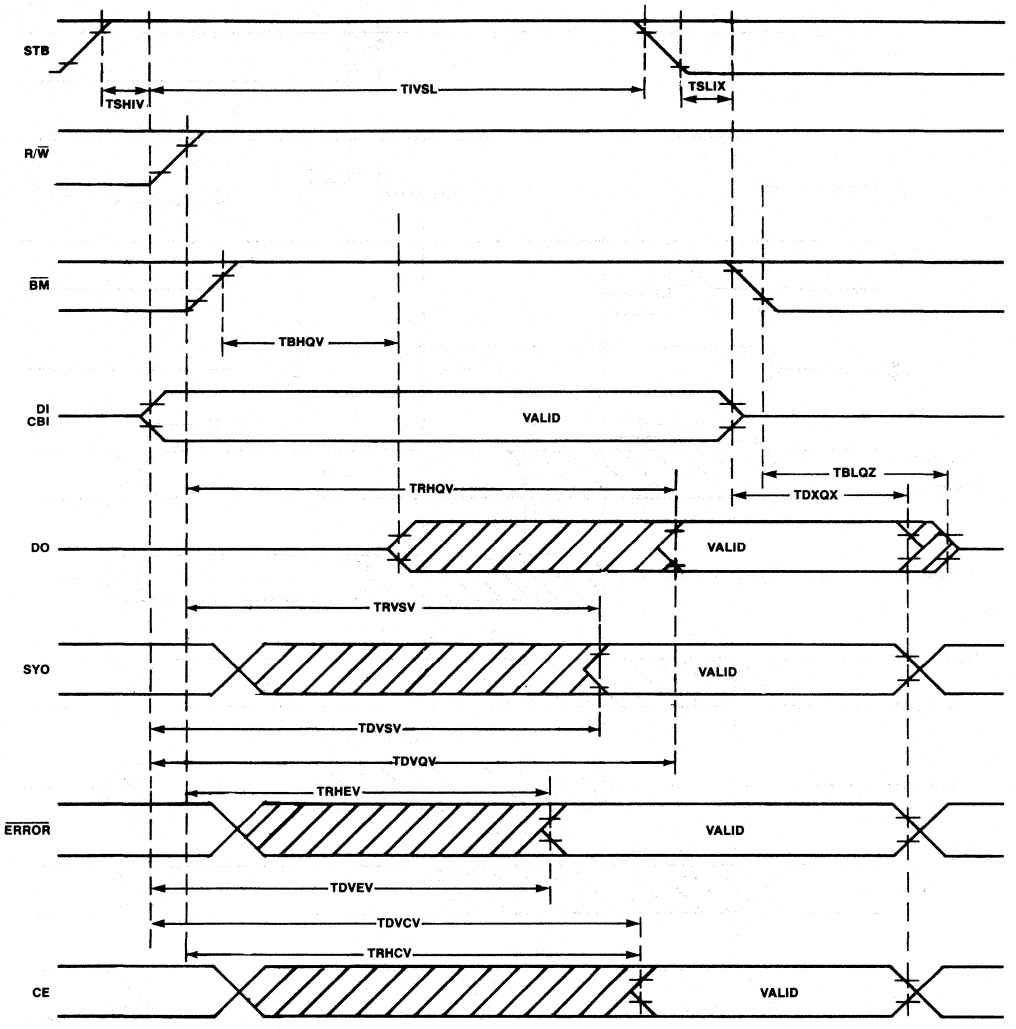

WAVEFORMS (Continued)

READ—MASTER/SLAVE

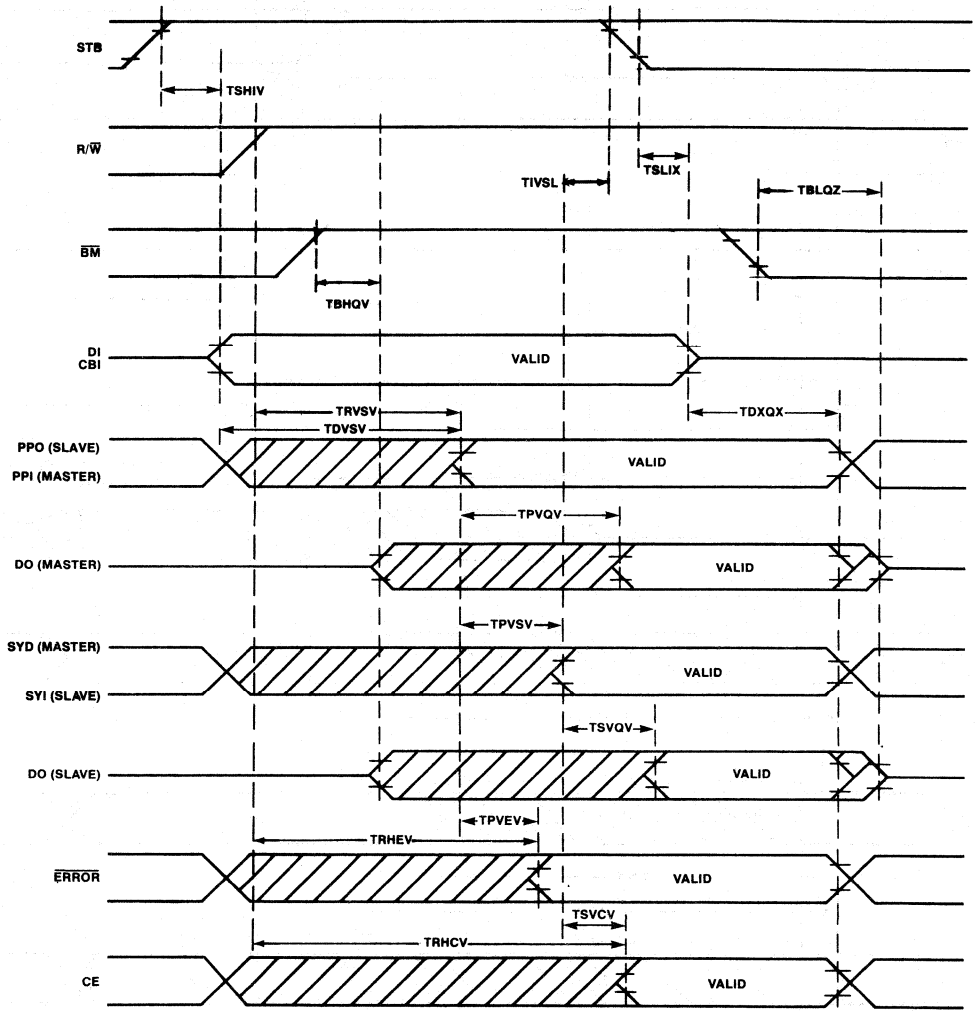

AFN-01966A

WAVEFORMS (Continued)

FULL WRITE—16 BIT ONLY

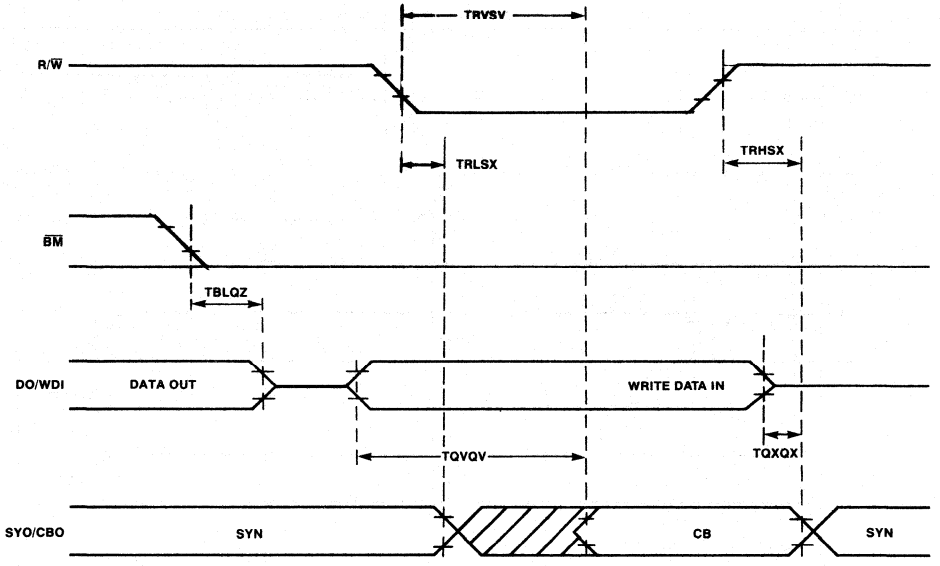

FULL WRITE—MASTER/SLAVE

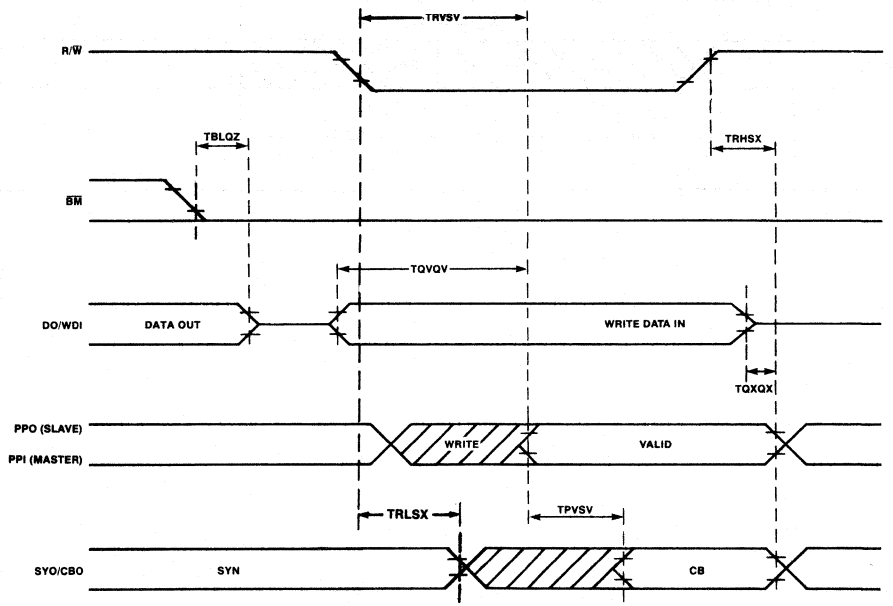

WAVEFORMS (Continued)

READ MODIFY WRITE—16 BIT ONLY

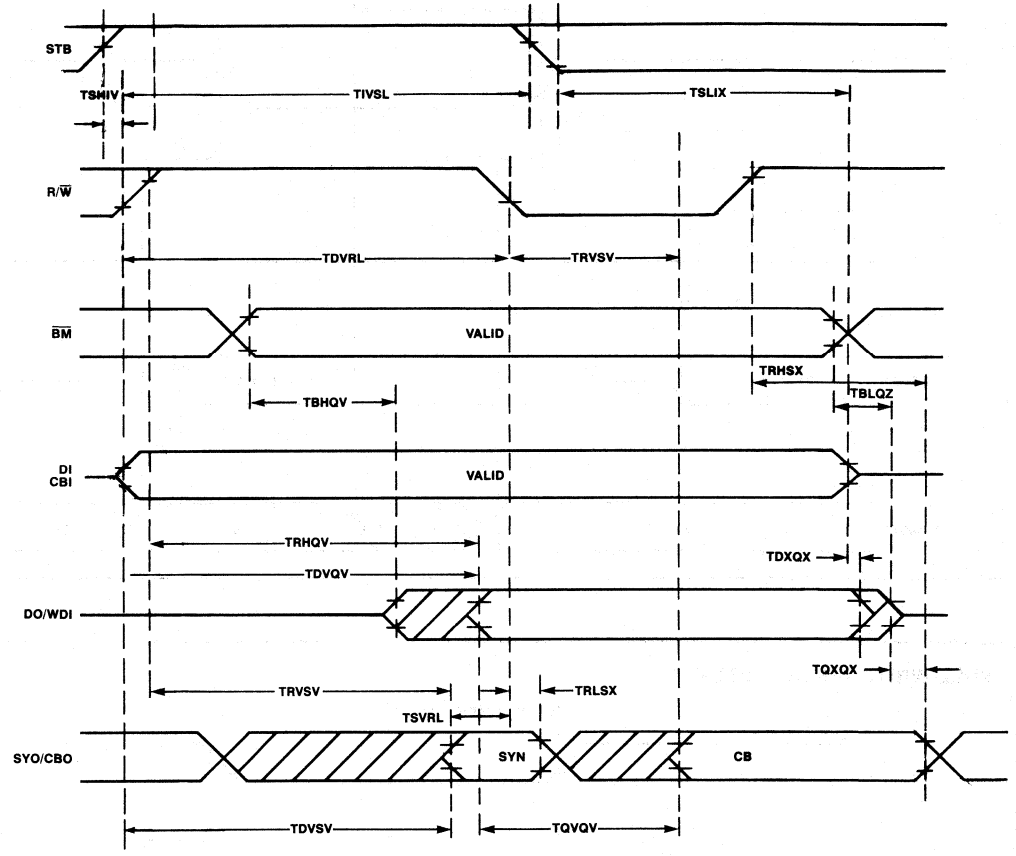

AFN-01966A

WAVEFORMS (Continued)

READ MODIFY WRITE—MASTER/SLAVE

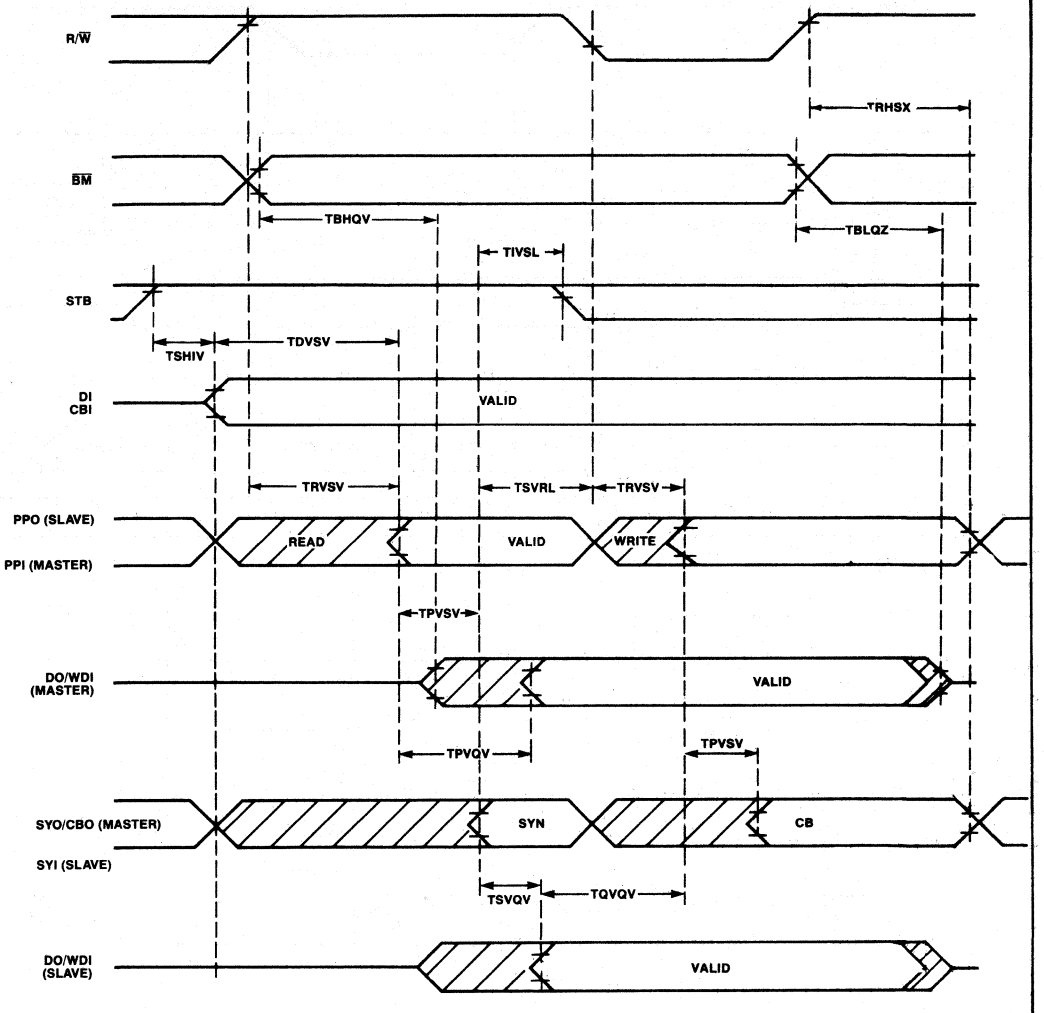

WAVEFORMS (Continued)

NON-CORRECTING READ

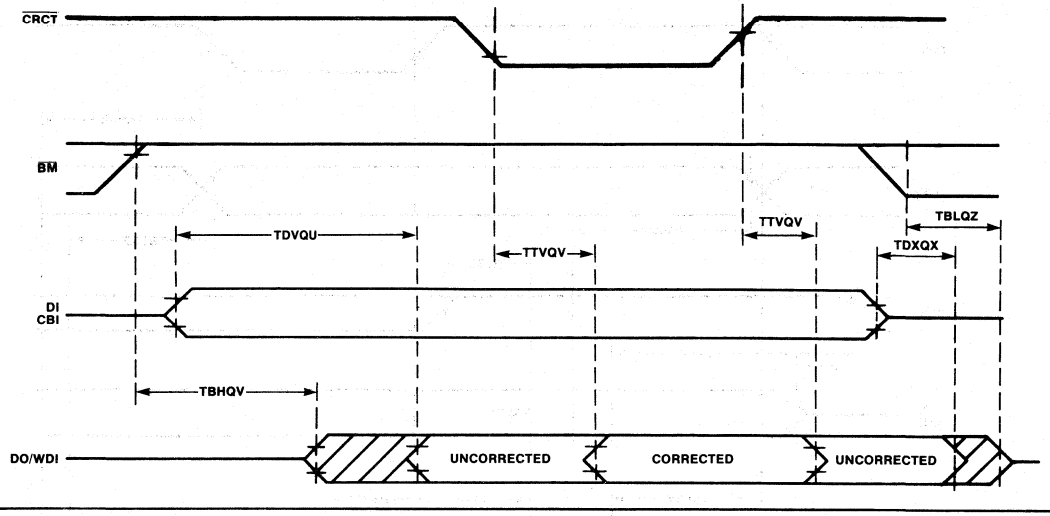

WRITE ZERO

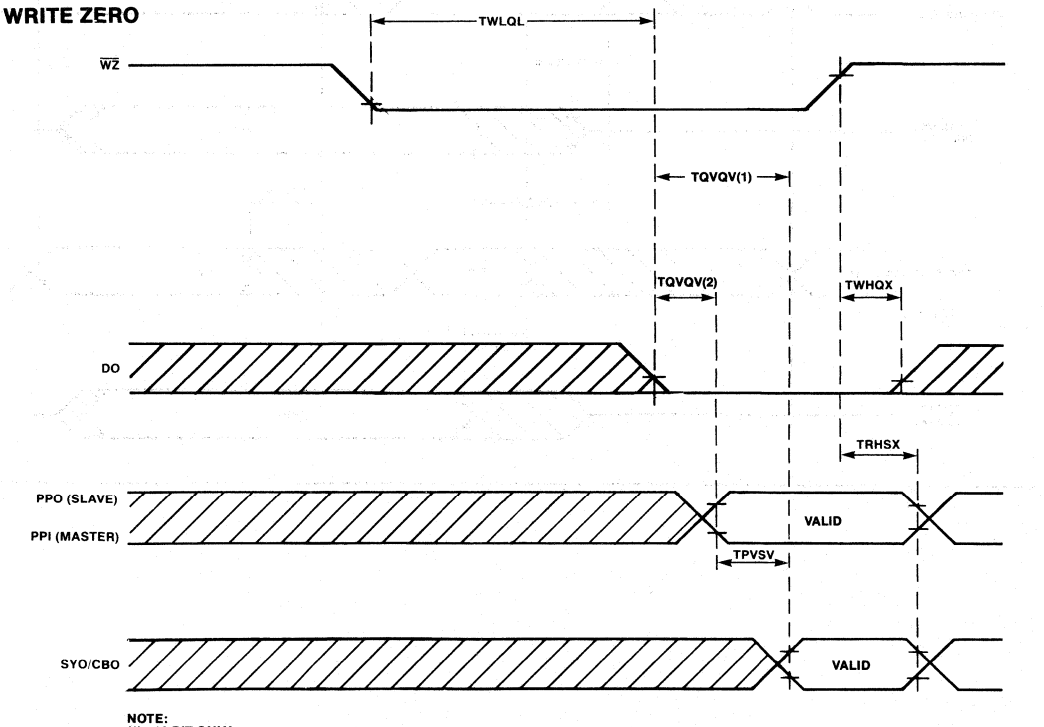

NOTE:
(1): 16 BIT ONLY
(2): MASTER/SLAVE

AFN-01966A

8271/8271-6
PROGRAMMABLE FLOPPY DISK CONTROLLER

- **IBM 3740 Soft Sectored Format Compatible**
- **Programmable Record Lengths**
- **Multi-Sector Capability**
- **Maintain Dual Drives with Minimum Software Overhead Expandable to 4 Drives**
- **Automatic Read/Write Head Positioning and Verification**
- **Internal CRC Generation and Checking**
- **Programmable Step Rate, Settle-Time, Head Load Time, Head Unload Index Count**
- **Fully MCS-80™ and MCS-85™ Compatible**
- **Single +5V Supply**
- **40-Pin Package**

The Intel® 8271 Programmable Floppy Disk Controller (FDC) is an LSI component designed to interface one to 4 floppy disk drives to an 8-bit microcomputer system. Its powerful control functions minimize both hardware and software overhead normally associated with floppy disk controllers.

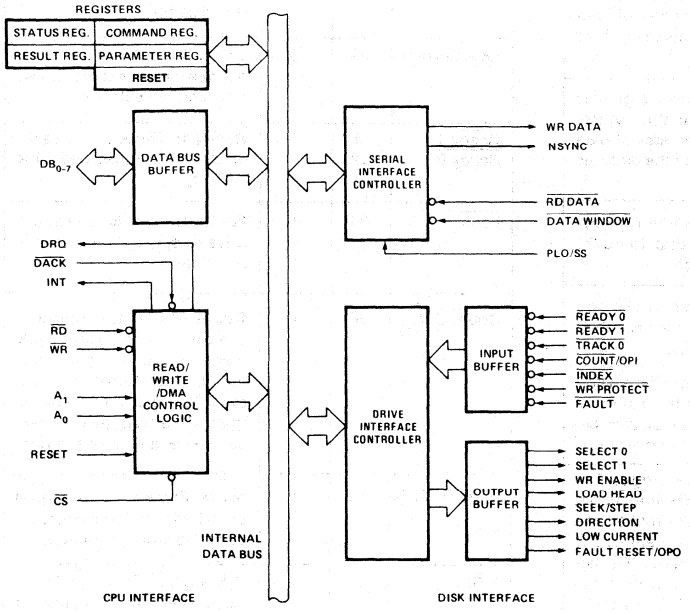

Figure 1. Block Diagram

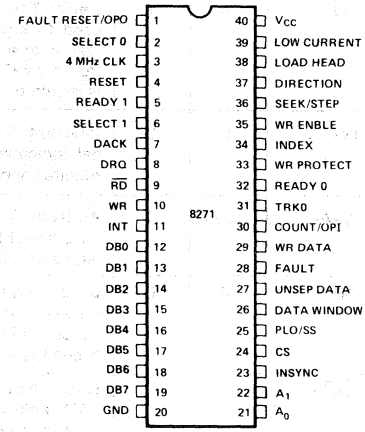

Figure 2. Pin Configuration

Table 1. Pin Description

Symbol	Pin No.	Type	Name and Function
V_{CC}	40		**+5V Supply.**
GND	20		**Ground.**
Clock	3	I	**Clock:** A square wave clock.
Reset	4	I	**Reset:** A high signal on the reset input forces the 8271 to an idle state. The 8271 remains idle until a command is issued by the CPU. The output signals of the drive interface are forced inactive (LOW). Reset must be active for 10 or more clock cycles.
$\overline{CS}$	24	I	**Chip Select:** The I/O Read and I/O Write inputs are enabled by the chip select signal.
DB_7-DB_0	19-12	I/O	**Data Bus:** The Data Bus lines are bidirectional, three-state lines (8080 data bus compatible).
$\overline{WR}$	10	I	**Write:** The Write signal is used to signal the control logic that a transfer of data from the data bus to the 8271 is required.
$\overline{RD}$	9	I	**Read:** The Read signal is used to signal the control logic that a transfer of data from the 8271 to the data bus is required.
INT	11	O	**Interrupt:** The interrupt signal indicates that the 8271 requires service.
A_1-A_0	22-21	I	**Address Line:** These two lines are CPU Interface Register select lines.
DRQ	8	O	**Data Request:** The DMA request signal is used to request a transfer of data between the 8271 and memory.
$\overline{DACK}$	7	I	**Data Acknowledge:** The DMA acknowledge signal notifies the 8271 that a DMA cycle has been granted. For non-DMA transfers, this signal should be driven in the manner of a "Chip Select."
Select 1– Select 0	6 2	O	**Selected Drive:** These lines are used to specify the selected drive. These lines are set by the command byte.

Symbol	Pin No.	Type	Name and Function
Fault Reset/ OPO	1	O	**Fault Reset:** The optional fault reset output line is used to reset an error condition which is latched by the drive. If this line is not used for a fault reset it can be used as an optional output line. This line is set with the write special register command.
Write Enable	35	O	**Write Enable:** This signal enables the drive write logic.
Seek/Step	36	O	**Seek/Step:** This multifunction line is used during drive seeks.
Direction	37	O	**Direction:** The direction line specifies the seek direction. A high level on this pin steps the R/W head toward the spindle (step-in), a low level steps the head away from the spindle (step-out).
Load Head	38	O	**Load Head:** The load head line causes the drive to load the Read/Write head against the diskette.
Low Current	39	O	**Low Current:** This line notifies the drive that track 43 or greater is selected.
$\overline{Ready\ 1}$, $\overline{Ready\ 0}$	5 32	I	**Ready 1:** These two lines indicate that the specified drive is ready.
$\overline{Fault}$	28	I	**Fault:** This line is used by the drive to specify a file unsafe condition.
$\overline{Count/OPI}$	30	I	**Count/OPI:** If the optional seek/direction/count seek mode is selected, the count pin receives pulses to step the R/W head to the desired track. Otherwise, this line can be used as an optional input.
$\overline{Write\ Protect}$	33	I	**Write Protect:** This signal specifies that the diskette inserted is write protected.
$\overline{TRK0}$	31	I	**Track Zero:** This signal indicates when the R/W head is positioned over track zero.
$\overline{Index}$	34	I	**Index:** The index signal gives an indication of the relative position of the diskette.

Table 1. Pin Description (Continued)

Symbol	Pin No.	Type	Name and Function
PLO/SS	25	I	**Phase-Locked Oscillator/ Single Shot:** This pin is used to specify the type of data separator used.
Write Data	29	O	**Write Data:** Composite write data.
$\overline{\text{Unseparated Data}}$	27	I	**Unseparated Data:** This input is the unseparated data and clocks.
Data Window	26	I	**Data Window:** This is a data window established by a single-shot or phase-locked oscillator data separator.
INSYNC	23	O	**Input Synchronization:** This line is high when 8271 has attained input data synchronization, by detecting 2 bytes of zeros followed by an expected Address Mark. It will stay high until the end of the ID or data field.

FUNCTIONAL DESCRIPTION

General

The 8271 Floppy Disk Controller (FDC) interfaces either two single or one dual floppy drive to an eight bit microprocessor and is fully compatible with Intel's new high performance MCS-85 microcomputer system. With minimum external circuitry, this innovative controller supports most standard, commonly-available flexible disk drives including the mini-floppy.

The 8271 FDC supports a comprehensive soft sectored format which is IBM 3740 compatible and includes provision for the designating and handling of bad tracks. It is a high level controller that relieves the CPU (and user) of many of the control tasks associated with implementing a floppy disk interface. The FDC supports a variety of high level instructions which allow the user to store and retrieve data on a floppy disk without dealing with the low level details of disk operation.

In addition to the standard read/write commands, a scan command is supported. The scan command allows the user program to specify a data pattern and instructs the FDC to search for that pattern on a track. Any application that is required to search the disk for information (such as point of sale price lookup, disk directory search, etc.), may use the scan command to reduce the CPU overhead. Once the scan operation is initiated, no CPU intervention is required.

CPU Interface Description

This interface minimizes CPU involvement by supporting a set of high level commands and both DMA and non-DMA type data transfers and by providing hierarchical status information regarding the result of command execution.

The CPU utilizes the control interface (see the Block diagram) to specify the FDC commands and to determine the result of an executed command. This interface is supported by five Registers which are addressed by the CPU via the A_1, A_0, $\overline{RD}$ and $\overline{WR}$ signals. If an 8080 based system is used, the $\overline{RD}$ and $\overline{WR}$ signals can be driven by the 8228's $\overline{I/OR}$ and $\overline{I/OW}$ signals. The registers are defined as follows:

Command Register

The CPU loads an appropriate command into the Command Register which has the following format:

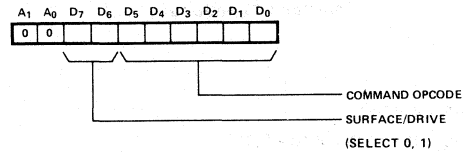

Parameter Register

Accepts parameters of commands that require further description; up to five parameters may be required, example:

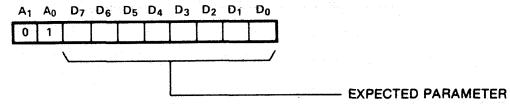

Result Register

The Result Register is used to supply the outcome of FDC command execution (such as a good/bad completion) to the CPU. The standard Result byte format is:

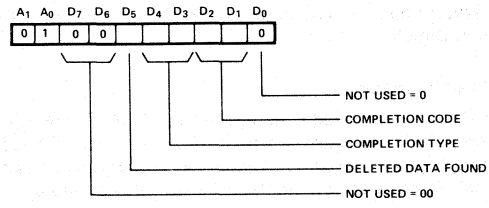

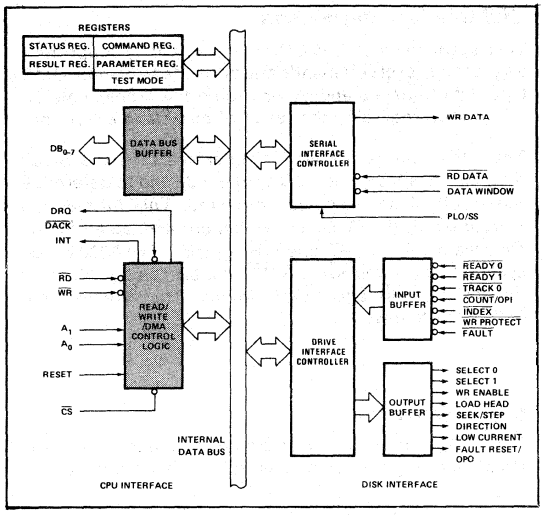

Figure 3. 8271 Block Diagram Showing CPU Interface Functions

Status Register

Reflects the state of the FDC.

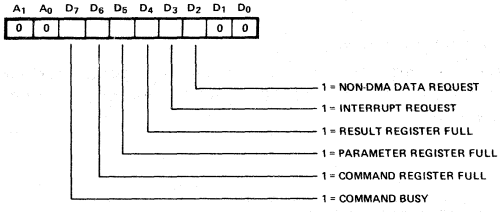

Reset Register

Allows the 8271 to be reset by the program. Reset must be active for 11 or more chip clocks.

INT (Interrupt Line)

Another element of the control interface is the Interrupt line (INT). This line is used to signal the CPU that an FDC operation has been completed. It remains active until the result register is read.

DMA Operation

The 8271 can transfer data in either DMA or non DMA mode. The data transfer rate of a floppy disk drive is high enough (one byte every 32 µsec) to justify DMA transfer. In DMA mode the elements of the DMA interface are:

DRQ: DMA Request:
The DMA request signal is used to request a transfer of data between the 8271 and memory.

$\overline{\text{DACK}}$: DMA Acknowledge:
The DMA acknowledge signal notifies the 8271 that a DMA cycle has been granted.

$\overline{\text{RD}}$, $\overline{\text{WR}}$: Read, Write
The read and write signals are used to specify the direction of the data transfer.

DMA transfers require the use of a DMA controller such as the Intel®8257. The function of the DMA controller is to provide sequential addresses and timing for the transfer at a starting address determined by the CPU. Counting of data block lengths is performed by the FDC.

To request a DMA transfer, the FDC raises DRQ. DACK and RD enable DMA data onto the bus (independently of CHIP SELECT). DACK and WR transfer DMA data to the FDC. If a data transfer request (read or write) is not serviced within 31 µsec, the command is cancelled, a late DMA status is set, and an interrupt is generated. In DMA mode, an interrupt is generated at the completion of the data block transfer.

When configured to transfer data in non-DMA mode, the CPU must pass data to the FDC in response to the non-DMA data requests indicated by the status word. The data is passed to and from the chip by asserting the DACK and the RD or WR signals. Chip select should be inactive (HIGH).

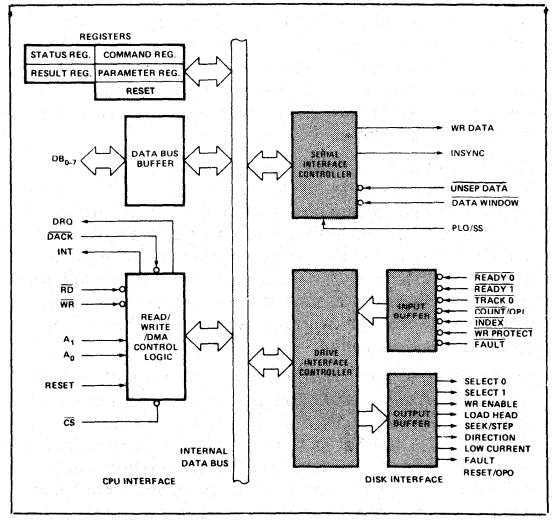

Figure 4. 8271 Block Diagram Showing Disk Interface Functions

Disk Drive Interface

The 8271 disk drive interface supports the high level command structure described in the Command Description section. The 8271 maintains the location of bad tracks and the current track location for two drives. However, with minor software support, this interface can support four drives by expanding the two drive select lines (select 0, select 1) with the addition of minimal support hardware.

The FDC Disk Drive Interface has the following major functions.

READ FUNCTIONS

Utilize the user supplied data window to obtain the clock and data patterns from the unseparated read data.

Establish byte synchronization.

Compute and verify the ID and data field CRCs.

WRITE FUNCTIONS

Encode composite write data.

Compute the ID and data field CRCs and append them to their respective fields.

CONTROL FUNCTIONS

Generate the programmed step rate, head load time, head settling time, head unload delay, and monitor drive functions.

Data Separation

The 8271 needs only a data window to separate the data from the composite read data as well as to detect missing clocks in the Address Marks.

The window generation logic may be implemented using either a single-shot separator or a phase-locked oscillator.

Single-Shot Separator

The single-shot separator approach is the lowest cost solution.

The FDC samples the value of Data Window on the leading edge of Unseparated Data and determines whether the delay from the previous pulse was a half or full bit-cell (high input = full bit-cell, low input = half bit-cell). PLO/SS should be tied to Ground.

Insync Pin

This pin gives an indication of whether the 8271 is synchronized with the serial data stream during read operations. This pin can be used with a phase-locked oscillator for soft and hard locking.

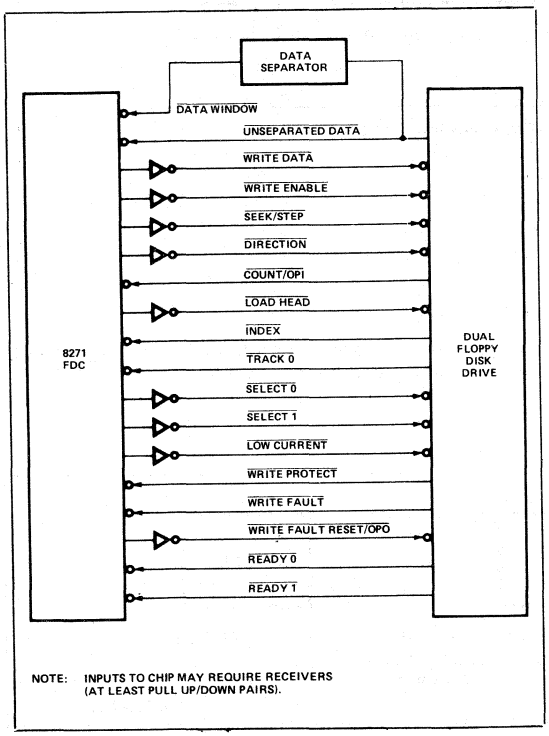

Figure 5. 8271 Disk Drive Interface

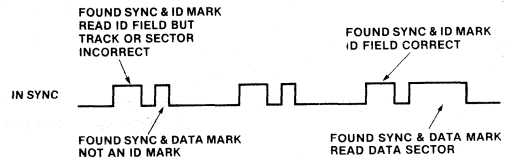

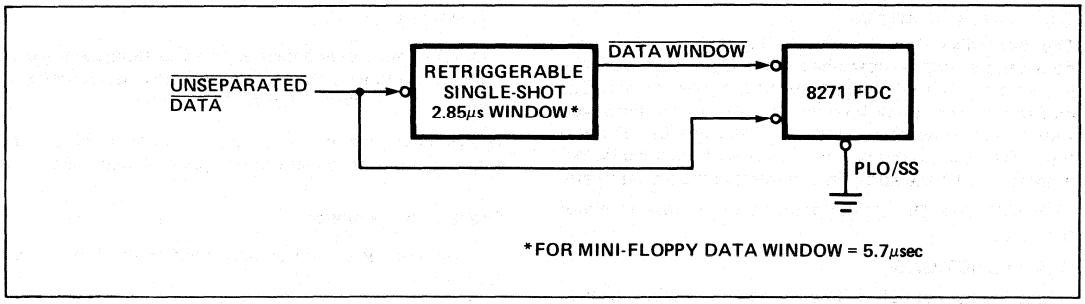

Figure 6. Single-Shot Data Separator Block Diagram

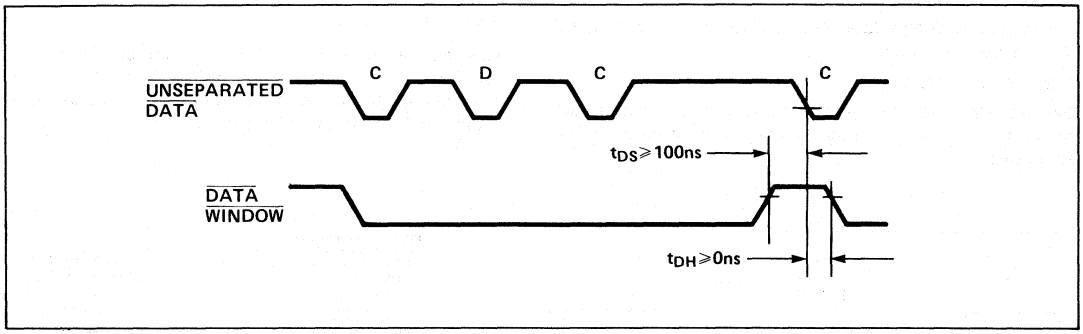

Figure 7. Single-Shot Data Window Timing

Phase-Locked Oscillator Separator

The FDC samples the value of Data Window on the leading edge of Unseparated Data and determines whether the pulse represents a Clock or Data Pulse.

PLO/SS should be tied to V_{CC} (+5V).

Insync may be used to provide soft and hard locking control for the phase-locked oscillator.

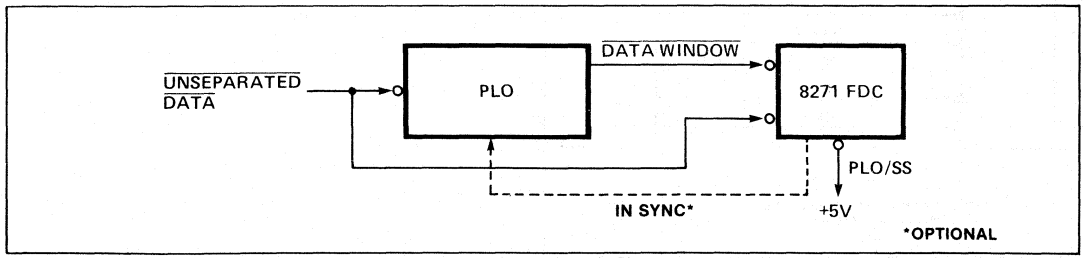

Figure 8. PLO Data Separator Block Diagram

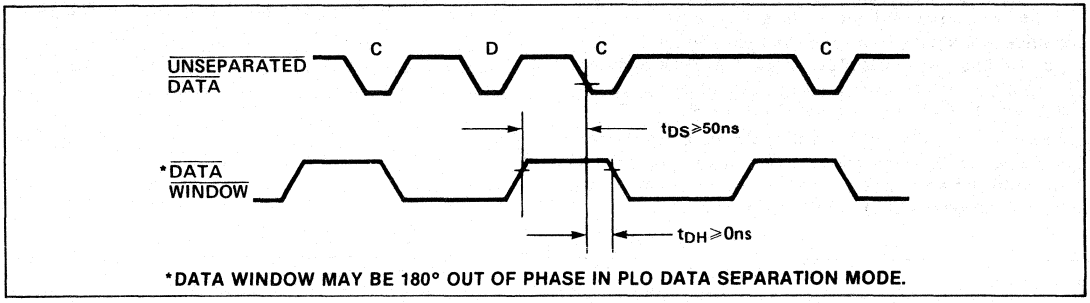

Figure 9. PLO Data Window Timing

Disk Drive Control Interface

The disk drive control interface performs the high level and programmable flexible disk drive operations. It custom tailors many varied drive performance parameters such as the step rate, settling time, head load time, and head unload index count. The following is the description of the control interface.

Write Enable

The Write Enable controls the read and write functions of a flexible disk drive. When Write Enable is a logical one, it enables the drive write electronics to pass current through the Read/Write head. When Write Enable is a logical zero, the drive Write circuitry is disabled and the Read/Write head detects the magnetic flux transitions recorded on a diskette. The write current turn-on is as follows.

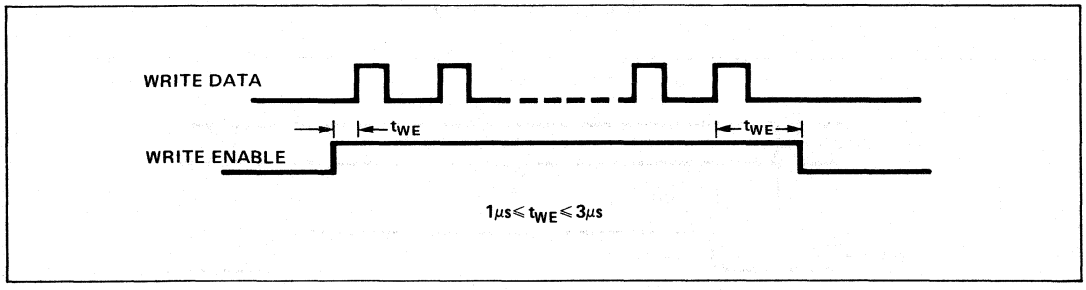

Figure 10. Write Enable Timing

Seek Control

Seek Control is accomplished by Seek/Step, Direction, and Count pins and can be implemented two ways to provide maximum flexibility in the subsystem design. One instance is when the programmed step rate is not equal to zero. In this case, the 8271 uses the Seek/Step and Direction pins (the Seek/Step pin becomes a Step pin). Programmable Step timing parameters are shown.

Another instance is when the programmable step rate is equal to zero, in which case the 8271 holds the seek line high until the appropriate number of user-supplied step pulses have been counted on the count input pin.

The Direction pin is a control level indicating the direction in which the R/W head is stepped. A logic high level on this line moves the head toward the spindle (step-in). A logic low level moves the head away from the spindle (step-out).

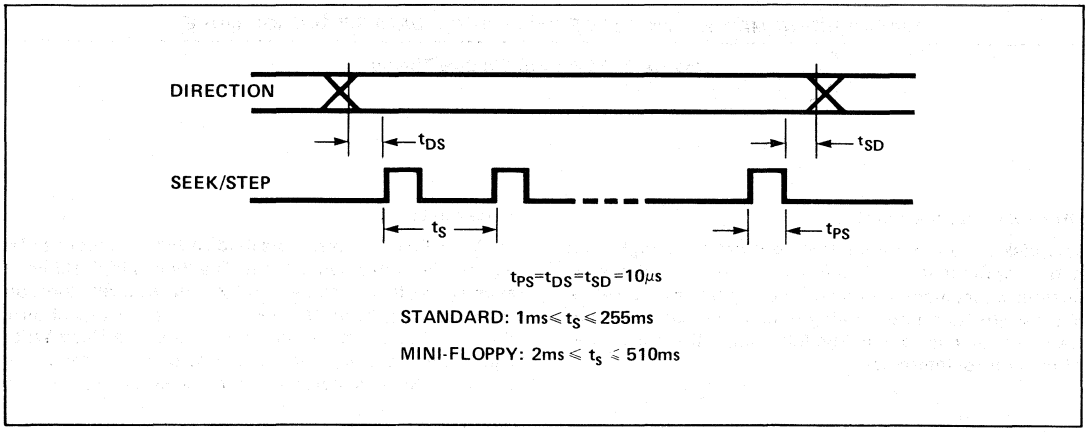

Figure 11. Seek Timing

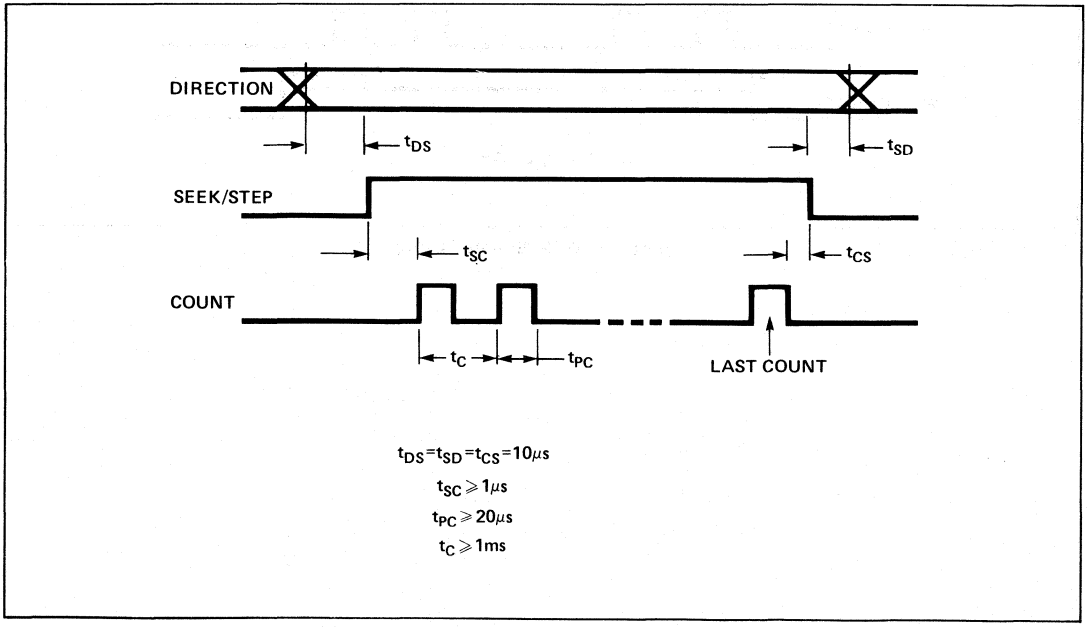

Figure 12. Seek/Step/Count Timing

Head Seek Settling Time

The 8271 allows the head settling time to be programmed from 0 to 255ms, in increments of 1ms.

The head settling time is defined as the interval of time from completion of the last step to the time when reading or writing on the diskette is possible (R/W Enable). The R/W head is assumed loaded.

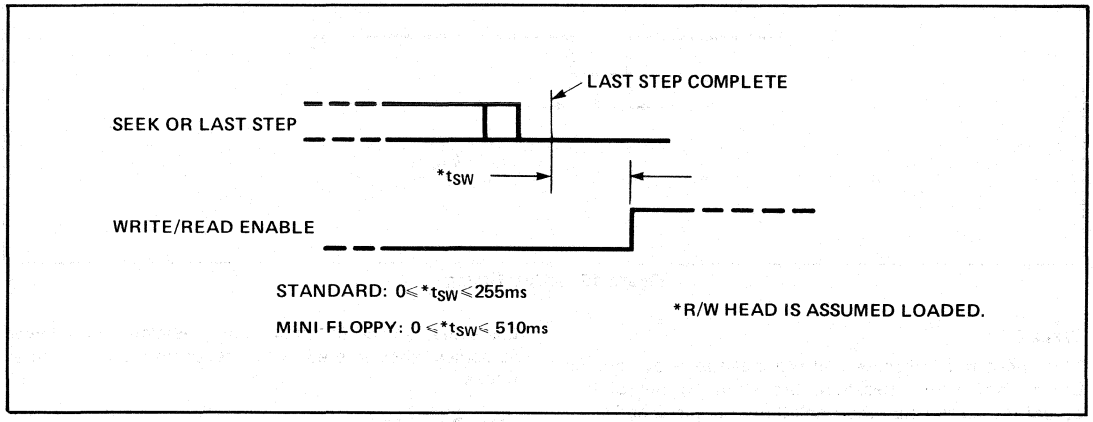

Figure 13. Head Load Settling Timing

Load Head

When active, load head output pin causes the drive's read/write head to be loaded on the diskette. When the head is initially loaded, there is a programmed delay (0 to 60ms in 4ms increments) prior to any read or write operation. Provision is also made to unload the head following an operation within a programmed number of diskette revolutions.

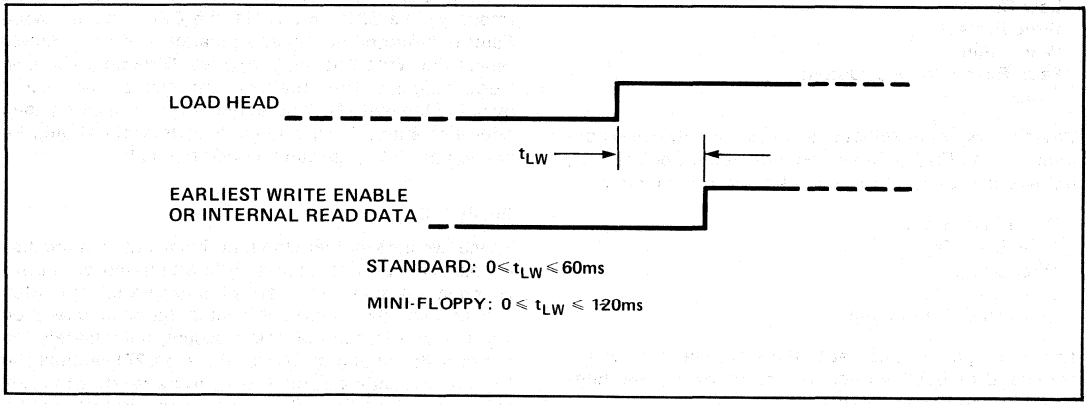

Figure 14. Head Load to Read/Write Timing

Index

The Index input is used to determine "Sector not found" status and to initiate format track/read ID commands and head unload Index and Count operations.

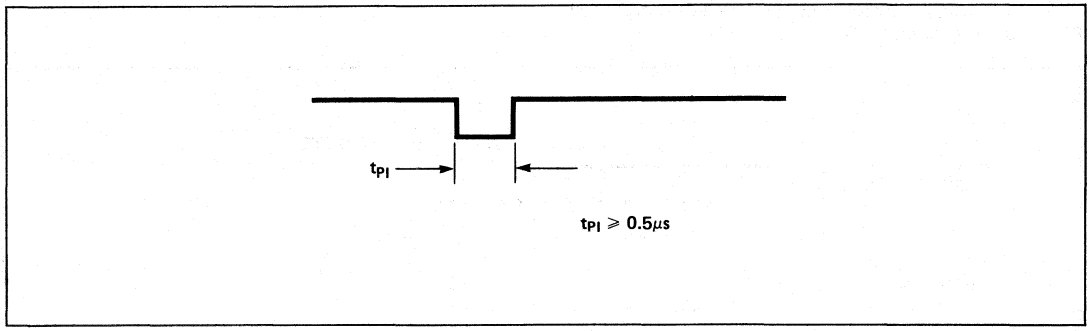

Figure 15. Index Timing

Track 0

This input pin indicates that the diskette is at track 0. During any seek operation, the stepping out of the actuator ceases when the track 0 pin becomes active.

Select 1, 0

Only one drive may be selected at a time. The Input/Output pins that must be externally qualified with Select 0 and Select 1 are:

Unseparated Data
Data Window
Write Enable
Seek/Step
Count/Optional Input
Load Head
Track 0
Low Current
Write Protect
Write Fault
Fault Reset/Optional Output
Index

When a new set of select bits is specified by a new command or the FDC finishes the index count before head unload, the following pins will be set to the 0 state:

Write Enable (35)
Seek/Step (36)
Direction (37)
Load Head (38)
Low Head Current (39)

The select pins will be set to the state specified by the command or both are set to zero following the index count before head unload.

Low Current

This output pin is active whenever the physical track location of the selected drive is greater than 43. Generally this signal is used to enable compensation for the lower velocities encountered while recording on the inner tracks.

Write Protect

The 8271 will not write to a disk when this input pin is active and will interrupt the CPU if a Write attempt is made. Operations which check Write Protect are aborted if the Write Protect line is active.

This signal normally originates from a sensor which detects the presence or absence of the Write Protect hole in the diskette jacket.

Write Fault and Write Fault Reset

The Write Fault input is normally latched by the drive and indicates any condition which could endanger data integrity. The 8271 interrupts the CPU anytime Write Fault is detected during an operation and immediately resets the Write Enable, Seek/Step, Direction, and Low Current signals. The write fault condition can be cleared by using the write fault reset pin. If the drive being used does not support write fault, then this pin should be connected to V_{CC} through a pull-up resistor.

Ready 1, 0

These two pins indicate the functional status of the disk drives. Whenever an operation is attempted on a drive which is not ready, an interrupt is generated. The interface continually monitors this input during an operation and if a Not Ready condition occurs, immediately terminates the operation. Note that the 8271 latches the Not Ready condition and it can only be reset by the execution of a Read Drive Status command. For drives that do not support a ready signal, either one can be derived with a one shot and the index pulse, or the ready inputs can be grounded and Ready determined through some software means.

PRINCIPLES OF OPERATION

As an 8080 peripheral device, the 8271 accepts commands from the CPU, executes them and provides a RESULT back to the 8080 CPU at the end of command execution. The communication with the CPU is established by the activation of $\overline{CS}$ and $\overline{RD}$ or $\overline{WR}$. The A_1, A_0 inputs select the appropriate registers on the chip:

$\overline{DACK}$	$\overline{CS}$	A_1	A_0	$\overline{RD}$	$\overline{WR}$	Operation
1	0	0	0	0	1	Read Status
1	0	0	0	1	0	Write Command
1	0	0	1	0	1	Read Result
1	0	0	1	1	0	Write Parameter
1	0	1	0	1	0	Write Reset Reg.
0	1	X	X	1	0	Write Data
0	1	X	X	0	1	Read Data
0	0	X	X	X	X	Not Allowed

The FDC operation is composed of the following sequence of events.

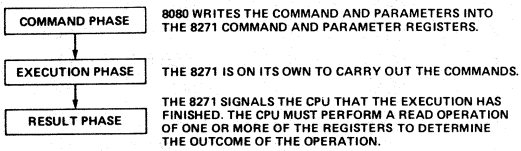

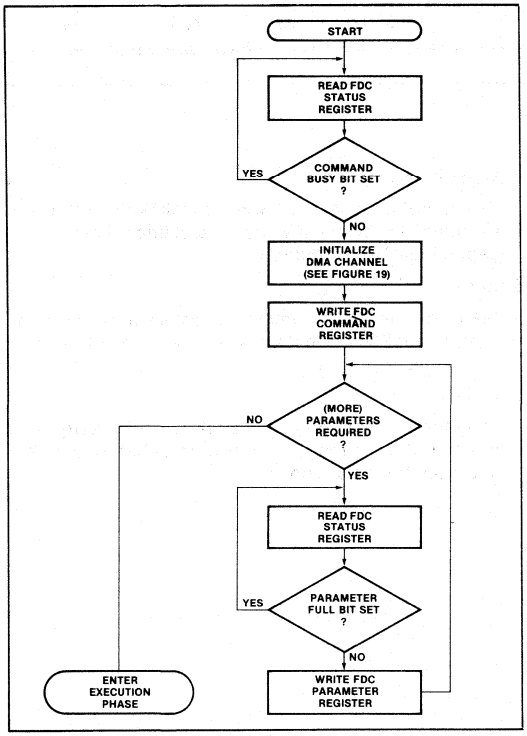

Figure 16. Passing the Command and Parameters to the 8271

The Command Phase

The software writes a command to the command register. As a function of the command issued, from zero to five parameters are written to the parameter register. Refer to diagram showing a flow chart of the command phase. Note that the flow chart shows that a command may not be issued if the FDC status register indicates that the device is busy. Issuing a command while another command is in progress is illegal. The flow chart also shows a parameter buffer full check. The FDC status indicates the state of the parameter buffer. If a parameter is issued while the parameter buffer is full, the previous parameter is over written and lost.

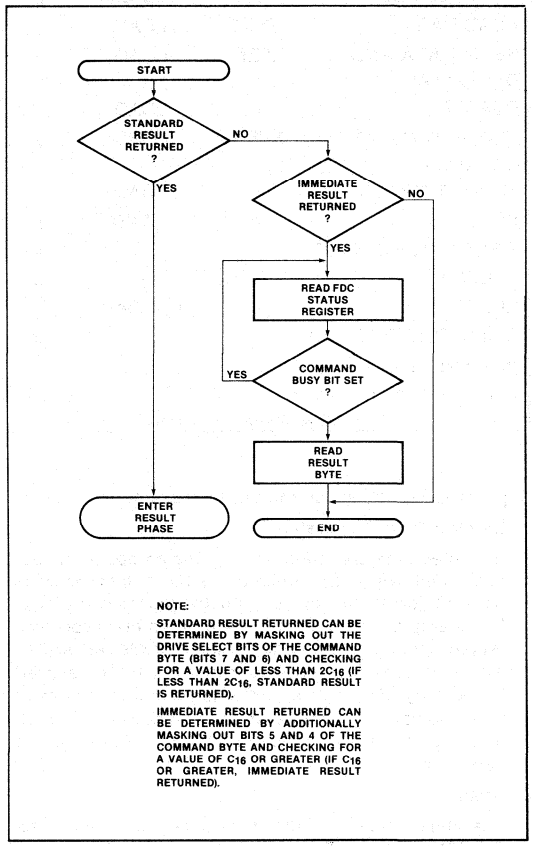

Figure 17. Checking for Result Type Following 8271 Command and Parameters

The Execution Phase

During the execution phase the operation specified during the command phase is performed. During this phase, there is no CPU involvement if the system utilizes DMA for the data transfers. The execution phase of each command is discussed within the detailed command descriptions. The following table summarizes many of the basic execution phase characteristics.

EXECUTION PHASE BASIC CHARACTERISTICS

The following table summarizes the various commands with corresponding execution phase characteristics.

Table 2. Execution Phase Basic Characteristics

COMMANDS	1 Deleted Data	2 Head	3 Ready	4 Write/ Protect	5 Seek	6 Seek Check	7 Result	8 Completion Interrupt
SCAN DATA	SKIP	LOAD	√	x	YES	YES	YES	YES
SCAN DATA AND DEL DATA	XFER	LOAD	√	x	YES	YES	YES	YES
WRITE DATA	x	LOAD	√	√	YES	YES	YES	YES
WRITE DEL DATA	x	LOAD	√	√	YES	YES	YES	YES
READ DATA	SKIP	LOAD	√	x	YES	YES	YES	YES
READ DATA AND DEL DATA	XFER	LOAD	√	x	YES	YES	YES	YES
READ ID	x	LOAD	√	x	YES	NO	YES	YES
VERIFY DATA AND DEL DATA	XFER	LOAD	√	x	YES	YES	YES	YES
FORMAT TRACK	x	LOAD	√	√	YES	NO	YES	YES
SEEK	x	LOAD	y	x	YES	NO	YES	YES
READ DRIVE STATUS	x	–	x	x	NO	NO	NOTE 5	NO
SPECIFY	x	–	x	x	NO	NO	NO	NO
RESET	x	UNLOAD	x	x	NO	NO	NO	NO
R SP REGISTERS	x	–	x	x	NO	NO	NOTE 6	NO
W SP REGISTERS	x	–	x	x	NO	NO	NO	NO

Note: 1. "x" → DON'T CARE 2. "√" → check 3. "–" → No change 4. "y" → Check at end of operation 5. See "READ DRIVE STATUS" command. 6. See "READ SPECIAL REGISTER" command.

Explanation of the execution phase characteristics table.

1. Deleted Data Processing

   If deleted data is encountered during an operation that is marked skip in the table, the deleted data record is not transferred into memory, but the record is counted. For example, if the command and parameters specify a read of five records and one of the records was written with a deleted data mark, four records are transferred to memory. The deleted data flag is set in the result byte. However, if the operation is marked transfer, all data is transferred to memory regardless of the type of data mark.

2. Head

   The Head column in the table specifies whether the Read/Write head will be loaded or not. If the table specifies load, the head is loaded after it is positioned over the track. The head loaded by a command remains loaded until the user specified number of index pulses have occurred.

3. Ready

   The Ready column indicates if the ready line (Ready 1, Ready 0) associated with the selected drive is checked. A not ready state is latched by the 8271 until the user executes a read status command.

4. Write Protect

   The operations that are marked check Write Protect are immediately aborted if Write Protect line is active at the beginning of an operation.

5. Seek

   Many of the 8271 commands cause a seek to the desired track. A current track register is maintained for each drive or surface.

6. Seek Check

   Operations that perform Seek Check verify that selected data in the ID field is correct before the 8271 accesses the data field.

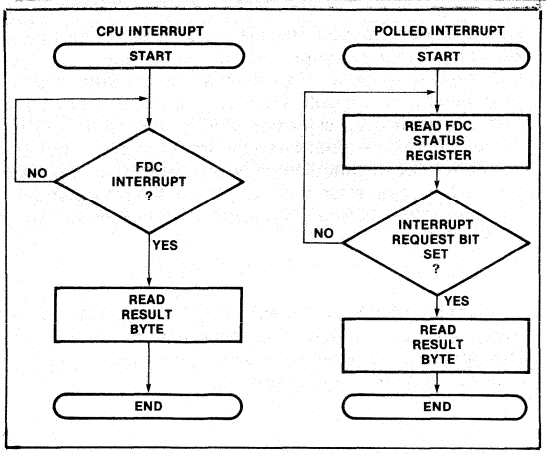

Figure 18. Getting the Result

The Result Phase

During the Result Phase, the FDC notifies the CPU of the outcome of the command execution. This phase may be initiated by:

1. The successful completion of an operation.
2. An error detected during an operation.

PROGRAMMING

A_1	A_0	CS RD	CS WR
0	0	Status Reg	Command Reg
0	1	Result Reg	Parameter Reg
1	0	—	Reset Reg
1	1	—	—

STATUS REGISTER

FDC Status

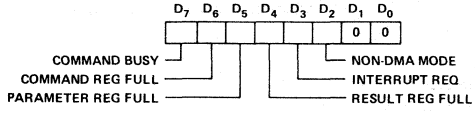

Bit 7: Command Busy

The command busy bit is set on writing to the command register. Whenever the FDC is busy processing a command, the command busy bit is set to a one. This bit is set to zero after the command is completed.

Bit 6: Command Full

The command full bit is set on writing to the command buffer and cleared when the FDC begins processing the command.

Bit 5: Parameter Full

This bit indicates the state of the parameter buffer. This bit is set when a parameter is written to the FDC and reset after the FDC has accepted the parameter.

Bit 4: Result Full

This bit indicates the state of the result buffer. It is valid only after Command Busy bit is low. This bit is set when the FDC finishes a command and is reset after the result byte is read by the CPU. The data in the result buffer is valid only after the FDC has completed a command. Reading the result buffer while a command is in progress yields no useful information.

Bit 3: Interrupt Request

This bit reflects the state of the FDC INT pin. It is set when FDC requests attention as a result of the completion of an operation or failure to complete an intended operation. This bit is cleared by reading the result register.

Bit 2: Non-DMA Data Request

When the FDC is utilized without a DMA controller, this bit is used to indicate FDC data requests. Note that in the non-DMA mode, an interrupt is generated (interrupt request bit is set) with each data byte written to or read from the diskette.

Bits 1 and 0:

Not used (zero returned).

After reading the Status Register, the CPU then reads the Result Register for more information.

THE RESULT REGISTER

This byte format facilitates the use of an address table to look up error routines and messages. The standard result byte format is:

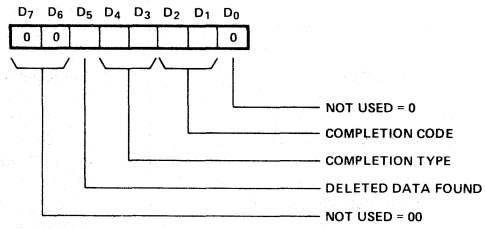

Bits 7 and 6:

Not used (zero returned).

Bit 5:

Deleted Data Found: This bit is set when deleted data is encountered during a transaction.

Bits 4 and 3: Completion Type

The completion type field provides general information regarding the outcome of an operation.

The completion type field provides general information regarding the outcome of an operation.

Completion Type	Event
00	Good Completion — No Error
01	System Error — recoverable errors;
10	operator intervention probably required for recovery.
11	Command/Drive Error — either a program error or drive hardware failure.

Bits 2 and 1: Completion Code

The completion code field provides more detailed information about the completion type (See Table).

Completion Type	Completion Code	Event
00	00	Good Completion/ Scan Not Met
00	01	Scan Met Equal
00	10	Scan Met Not Equal
00	11	— —
01	00	Clock Error
01	01	Late DMA
01	10	ID CRC Error
01	11	Data CRC Error
10	00	Drive Not Ready
10	01	Write Protect
10	10	Track 0 Not Found
10	11	Write Fault
11	00	Sector Not Found
11	01	— —
11	10	— —
11	11	— —

It is important to note the hierarchical structure of the result byte. In very simple systems where only a GO-NO GO result is required, the user may simply branch on a zero result (a zero result is a good completion). The next level of complexity is at the completion type interface. The completion type supplies enough information so that the software may distinguish between fatal and non-fatal errors. If a completion type 01 occurs, ten retries should be performed before the error is considered unrecoverable.

The Completion Type/Completion Code interface supplies the greatest detail about each type of completion. This interface is used when detailed information about the transaction completion is required.

Bit 0:

Not used (zero returned).

Table 3. Completion Code Interpretation

Definition	Interpretation
Successful Completion/ Scan Not Met	The diskette operation specified was completed without error. If scan operation was specified, the pattern scanned was not found on the track addressed.
Scan Met Equal	The data pattern specified with the scan command was found on the track addressed with the specified comparison, and the equality was met.
Scan Met Not Equal	The data pattern specified with the scan command was found with the specified comparison on the track addressed, but the equality was not met.
Clock Error	During a diskette read operation, a clock bit was missing (dropped). Note that this function is disabled when reading any of the ID address marks (which contain missing clock pulses). If this error occurs, the operation is terminated immediately and an interrupt is generated.
Late DMA	During either a diskette read or write operation, the data channel did not respond within the allotted time interval to prevent data from being overwritten or lost. This error immediately terminates the operation and generates an interrupt.
ID Field CRC Error	The CRC word (two bytes) derived from the data read in an ID field did not match the CRC word written in the ID field when the track was formatted. If this error occurs, the associated diskette operation is prevented and no data is transferred.
Data Field CRC Error	During a diskette read operation, the CRC word derived from the data field read did not match the data field CRC word previously written. If this error occurs, the data read from the sector should be considered invalid.
Drive Not Ready	The drive addressed was not ready. This indication is caused by any of the following conditions: 1. Drive not powered up 2. Diskette not loaded 3. Non-existent drive addressed 4. Drive went not ready during an operation Note that this completion code is cleared only through an FDC read drive status command.
Write Protect	A diskette write operation was specified on a write protected diskette. The intended write operation is prevented and no data is written on the diskette.
Track 00 Not Found	During a seek to track 00 operation, the drive failed to provide a track 00 indication after being stepped 255 times.
Write Fault	This error is dependent on the drive supported and indicates that the fault input to the FDC has been activated by the drive.
Sector Not Found	Either the sector addressed could not be found within one complete revolution of the diskette (two index marks encountered) or the track address specified did not match the track address contained in the ID field. Note that when the track address specified and the track address read do not match, the FDC automatically increments its track address register (stepping the drive to the next track) and again compares the track addresses. If the track addresses still do not match, the track address register is incremented a second time and another comparison is made before the sector not found completion code is set.

INITIALIZATION

Reset Command

	A_1	A_0	D_7	D_6	D_5	D_4	D_3	D_2	D_1	D_0
PAR:	1	0	0	0	0	0	0	0	0	1
PAR:	1	0	0	0	0	0	0	0	0	0

Function: The Reset command emulates the action of the reset pin. It is issued by outputting a one followed by a zero to the Reset register.

1. The drive control signals are forced low.
2. An in-progress command is aborted.
3. The FDC status register flags are cleared.
4. The FDC enters an idle state until the next command is issued.

Reset must be active for 10 or more clock cycles.

SPECIFY COMMAND

Many of the interface characteristics of the FDC are specified by the systems software. Prior to initiating any drive operation command, the software must execute the three specify commands. There are two types of specify commands selectable by the first parameter issued.

First Parameter	Specify Type
$0D_H$	Initialization
10_H	Load bad Tracks Surface '0'
18_H	Load bad Tracks Surface '1'

The Specify command is used prior to performing any diskette operation (including formatting of a diskette) to define the drive's inherent operating characteristics and also is used following a formatting operation or installation of another diskette to define the locations of bad tracks. Since the Specify command only loads internal registers within the 8271 and does not involve an actual diskette operation, command processing is limited to only Command Phase. Note that once the operating characteristics and bad tracks have been specified for a given drive and diskette, redefining these values need only be done if a diskette with unique bad tracks is to be used or if the system is powered down.

Initialization:

	A_1	A_0	D_7	D_6	D_5	D_4	D_3	D_2	D_1	D_0
CMD:	0	0	0	0	1	1	0	1	0	1
PAR:	0	1	0	0	0	0	1	1	0	1
PAR:	0	1	STEP RATE*							
PAR:	0	1	HEAD SETTLING TIME*							
PAR:	0	1	INDEX CNT BEFORE HEAD UNLOAD*				HEAD LOAD TIME*			

*Note: Mini-floppy parameters are doubled.

Parameter 0 — $0D_H$ = Select Specify Initialization.
Parameter 1 — D_7-D_0 = Step Rate (0-255ms in 1ms steps).
Parameter 2 — D_7-D_0 = Head Settling Time (0-255ms in 1 ms steps). {0 – 510ms in 2ms steps} () = standard, {} = mini
Parameter 3 — D_7-D_4 = Index Count — Specifies the number of Revolutions (0-14) which are to occur before the FDC automatically unloads the R/W head. If 15 is specified, the head remains loaded.
D_3-D_0 = Head Load Time (0-60ms in steps of 4ms). {0 – 120ms in 8ms steps} () = standard, {} = mini

Load Bad Tracks

	A_1	A_0	D_7	D_6	D_5	D_4	D_3	D_2	D_1	D_0
CMD:	0	0	0	0	1	1	0	1	0	1
PAR:	0	1	0	0	0	1	1/0	0	0	0
PAR:	0	1	BAD TRACK NO. 1							
PAR:	0	1	BAD TRACK NO. 2							
PAR:	0	1	CURRENT TRACK							

Parameter 0: 10_H = Load Surface zero bad tracks
18_H = Load Surface one bad track

Parameter 1:
Bad track address number 1 (Physical Address).

It is recommended to program both bad tracks and current track to FF_H during initialization.

SEEK COMMAND

The seek command moves the head to the specified track without loading the head or verifying the track.

The seek operation uses the specified bad tracks to compute the physical track address. This feature insures that the seek operation positions the head over the correct track.

When a seek to track zero is specified, the FDC steps the head until the track 00 signal is detected.

If the track 00 signal is not detected within $(FF)_H$ steps, a track 0 not found error status is returned.

A seek to track zero is used to position the read/write head when the current head position is unknown (such as after a power up).

	A_1	A_0	D_7	D_6	D_5	D_4	D_3	D_2	D_1	D_0
CMD:	0	0	SEL 1	SEL 0	1	0	1	0	0	1
PAR:	0	1	TRACK ADDRESS 0-255							

Seek operations are not verified. A subsequent read or write operation must be performed to determine if the correct track is located.

READ DRIVE STATUS COMMAND

This command is used to interrogate the drive status. Upon completion the result register will hold the final drive status.

	A_1	A_0	D_7	D_6	D_5	D_4	D_3	D_2	D_1	D_0
CMD:	0	0	SEL 1	SEL 0	1	0	1	1	0	0

RESULT: EACH BIT INDICATES CURRENT STATE OF INPUT PINS.

A_1	A_0	D_7	D_6	D_5	D_4	D_3	D_2	D_1	D_0
0	1	—	RDY 1*	WR FAULT	INDEX	WR PROT	RDY 0*	TRACK 0	CNT. / OPI

IF A DRIVE NOT READY RESULT IS RETURNED, THE READ STATUS MUST BE ISSUED TO CLEAR THE CONDITION.

*Note the two ready bits are zero latching. Therefore, to clear the drive not ready condition, assuming the drive is ready, and to detect it via software, one must issue this command twice.

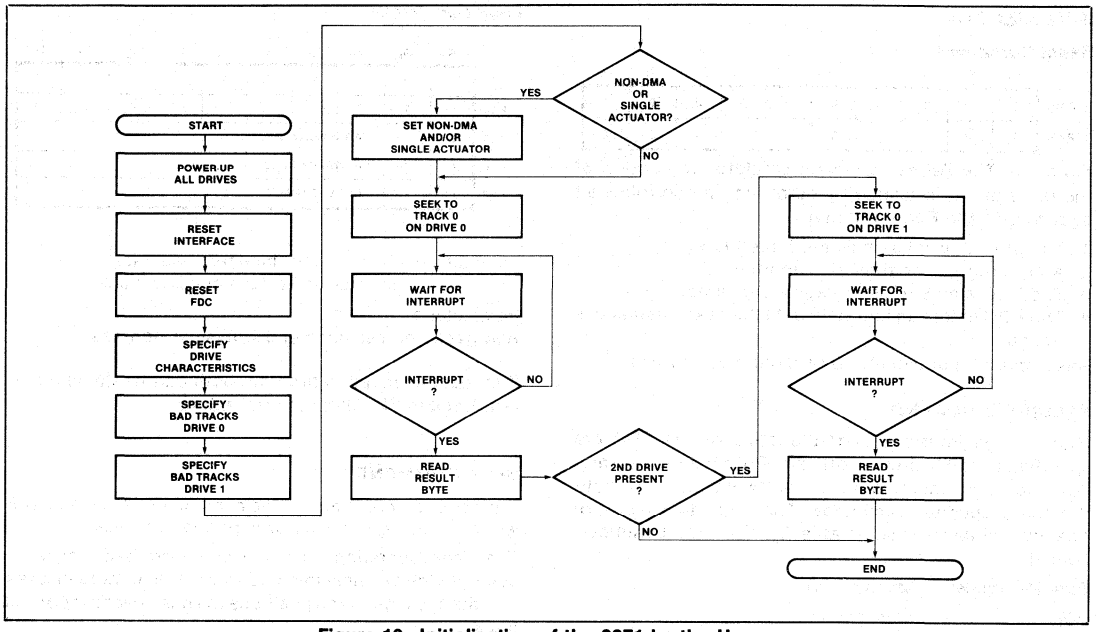

Figure 19. Initialization of the 8271 by the User

Read/Write Special Registers

This command is used to access special registers within the 8271.

	A_1	A_0	D_7	D_6	D_5 D_4 D_3 D_2 D_1 D_0
CMD:	0	0	SEL 1	SEL 0	COMMAND OPCODE
PAR:	0	1	REGISTER ADDRESS		

Command code:

$3D_H$ Read Special Register
$3A_H$ Write Special Register

For both commands, the first parameter is the register address; for Write commands a second parameter specifies data to be written. Only the Read Special Register command supplies a result.

Table 4. Special Registers

Description	Register Address in Hex	Comment
Scan Sector Number	06	See Scan Description
Scan MSB of Count	14	See Scan Description
Scan LSB of Count	13	See Scan Description
Surface 0 Current Track	12	
Surface 1 Current Track	1A	
Mode Register	17	See Mode Register Description
Drive Control Output Port	23	See Drive Output Port Description
Drive Control Input Port	22	See Drive Input Port Description
Surface 0 Bad Track 1	10	
Surface 0 Bad Track 2	11	
Surface 1 Bad Track 1	18	
Surface 1 Bad Track 2	19	

Mode Register Write Parameter Format

D_7	D_6	D_5	D_4	D_3	D_2	D_1	D_0
1	1	0	0	0	0		

D_1 = 0 DMA MODE, = 1 NON DMA
D_0 = 0 DOUBLE, = 1 SINGLE ACTUATOR

Bits 6 & 7

Must be one.

Bits 5-2

(Not used). Must be set to zero.

***Bit 1**

Double/Single Actuator: Selects single or double actuator mode. If the single actuator mode is selected, the FDC assumes that the physical track location of both disks is always the same. This mode facilitates control of a drive which has a single actuator mechanism to move two heads.

***Bit 0**

Data Transfer Mode: This bit selects the data transfer mode. If this bit is a zero, the FDC operates in the DMA mode (DMA Request/ACK). If this bit is a one, the FDC operates in non-DMA mode. When the FDC is operating in DMA mode, interrupts are generated at the completion of commands. If the non-DMA mode is selected, the FDC generates an interrupt for every data byte transferred.

*Bits 0 and 1 are initialized to zero.

Non-DMA Transfers in DMA Mode

If the user desires, he may retain the use of interrupts generated upon command completions. This mode is accomplished by selecting the DMA capability, but using the DMA REQ/ACK pins as effective INT and CS signals, respectively.

Drive Control Input Port

Reading this port will give the CPU exactly the data that the FDC sees at the corresponding pins. Reading this port will update the drive not ready status, but will not clear the status. (See Read Drive Status Command for Bit locations.)

Drive Control Output Port Format

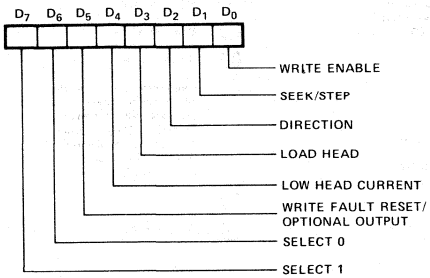

Each of these signals correspond to the chip pin of the same name. On standard-sized drives with write fault detection logic, bit 5 is set to generate the write fault reset signal. This signal is used to clear a write fault indication within the drive. On mini-sized drives, this bit can be used to turn on or off the drive motor prior to initiating a drive operation. A time delay after turn on may be necessary for the drive to come up to speed. The register must be read prior to writing the register in order to save the states of the remaining bits. When the register is subsequently written to modify bit 5, the remaining bits must be restored to their previous states.

IBM DISKETTE GENERAL FORMAT INFORMATION

The IBM Flexible Diskette used for data storage and retrieval is organized into concentric circular paths or TRACKS. There are 77 tracks on either one or both sides (surfaces) of the diskette. On double-sided diskettes, the corresponding top and bottom tracks are referred to as a CYLINDER. Each track is further divided into fixed length sections or SECTORS. The number of sectors per track — 26, 15 or 8 — is determined when a track is formatted and is dependent on the sector length — 128, 256 or 512 bytes respectively — specified.

All tracks on the diskette are referenced to a physical index mark (a small hole in the diskette). Each time the hole passes a photodetector cell (one revolution of the diskette), an Index pulse is generated to indicate the logical beginning of a track. This index pulse is used to initiate a track formatting operation.

Track Format

Each Diskette Surface is divided into 77 tracks with each track divided into fixed length sectors. A sector can hold a whole record or a part of a record. If the record is shorter than the sector length, the unused bytes are filled with binary zeros. If a record is longer than the sector length, the record is written over as many sectors as its length requires. The sector size that provides the most efficient use of diskette space can be chosen depending upon the record length required.

Tracks are numbered from 00 (outer-most) to 76 (inner-most) and are used as follows:

TRACK 00 reserved as System Label Track
TRACKS 01 through 74 used for data
TRACKS 75 and 76 used as alternates.

Each sector consists of an ID field (which holds a unique address for the sector) and a data field.

The ID field is seven bytes long and is written for each sector when the track is formatted. Each ID field consists of an ID field Address Mark, a Cylinder Number byte which identifies the track number, a Head Number byte which specifies the head used (top or bottom) to access the sector, a Record Number byte identifying the sector number (1 through 26 for 128 byte sectors), an N-byte specifying the byte length of the sector and two CRC (Cyclic Redundancy Check) bytes.

The Gaps separating the index mark and the ID and data fields are written on a track when it is formatted. These gaps provide both an interval for switching the drive electronics from reading or writing and compensation for rotational speed and other diskette-to-diskette and drive-to-drive manufacturing tolerances to ensure that data written on a diskette by one system can be read by another (diskette interchangeability).

IBM Format Implementation Summary

Track Format

The disk has 77 tracks, numbered physically from 00 to 76, with track 00 being the outermost track. There are logically 75 data tracks and two alternate tracks. Any two tracks may be initialized as bad tracks. The data tracks are numbered logically in sequence from 00 to 74, skipping over bad tracks (alternate tracks replace bad tracks). Note: In IBM format track 00 cannot be a bad track.

Sector Format

Each track is divided into 26, 15, or 8 sectors of 128, 256, or 512 bytes length respectively. The first sector is numbered 01, and is physically the first sector after the physical index mark. The logical sequence of the remaining sectors may be nonsequential physically. The location of these is determined at initialization by CPU software.

Each sector consists of an ID field and a data field. All fields are separated by gaps. The beginning of each field is indicated by 6 bytes of $(00)_H$ followed by a one byte address mark.

Address Marks

Address Marks are unique bit patterns one byte in length which are used to identify the beginning of ID and Data fields. Address Mark bytes are unique from all other data

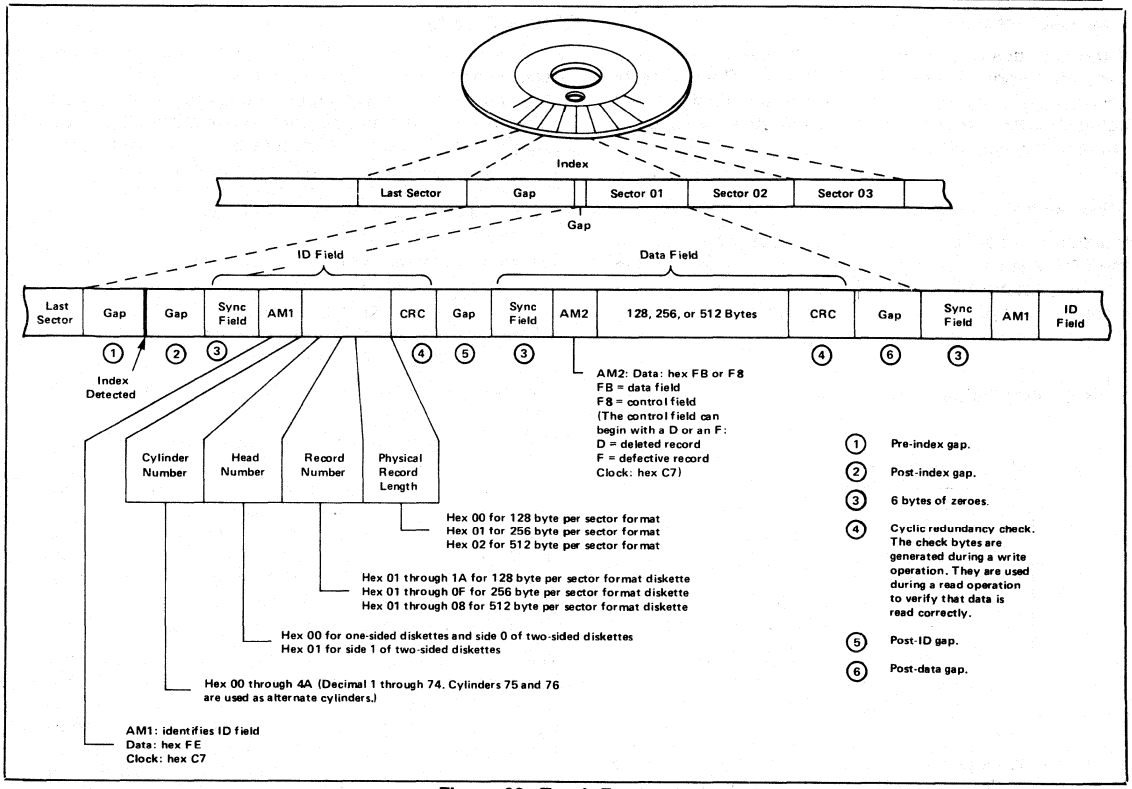

Figure 20. Track Format

bytes in that certain bit cells do not contain a clock bit (all other data bytes have clock bits in every bit cell.) There are four different types of Address Marks used. Each of these is used to identify different types of fields.

Index Address Mark

The Index Address Mark is located at the beginning of each track and is a fixed number of bytes in front of the first record.

ID Address Mark

The ID Address Mark byte is located at the beginning of each ID field on the diskette.

Data Address Mark

The Data Address Mark byte is located at the beginning of each non-deleted Data Field on the diskette.

Deleted Data Address Mark

The Deleted Data Address Mark byte is located at the beginning of each deleted Data Field on the diskette.

Address Mark Summary	Clock Pattern	Data Pattern
Index Address Mark	D7	FC
ID Address Mark	C7	FE
Data Address Mark	C7	FB
Deleted Data Address Mark	C7	F8
Bad Track ID Address Mark	C7	FE

ID Field

MARK	C	H	R	N	CRC	CRC

C = Cylinder (Track) Address, 00-74
H = Head Address
R = Record (Sector) Address, 01-26
N = Record (Sector) Length, 00-02
Note: Sector Length = 128 x 2^N bytes
CRC = 16 Bit CRC Character (See Below)

Data Field

MARK	DATA	CRC	CRC

Data is 128, 256, or 512 bytes long.

Note: All marks, data, ID characters and CRC characters are recorded and read most significant bit first.

CRC Character

The 16-bit CRC character is generated using the generator polynominal $X^{16} + X^{12} + X^5 + 1$, normally initialized to $(FF)_H$. It is generated from all characters (except the CRC in the ID or data field), including the data (not the clocks) in the address mark. It is recorded and read most significant bit first.

Data Format

Data is written (general case) in the following manner:

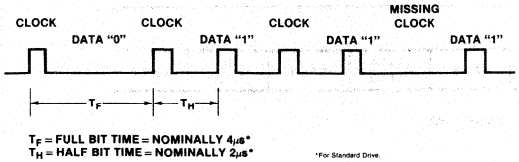

References

"The IBM Diskette for Standard Data Interchange," IBM Document GA21-9182-0. "System 32," Chapter 8, IBM Document GA21-9176-0.

Bad Track Format

The Bad Track Format is the same as the good track format except that the bad track ID field is initialized as follows:

$$C = H = R = N = (FF)_H$$

When formatting, bad track registers should be set to FF_H for the drive during the formatting, thus specifying no bad tracks. Thus, all tracks are left available for formatting.

The track following the bad track(s) should be one higher in number than track before the bad track(s).

Upon completion of the format the bad tracks should be set up using the write special register command. The 8271 will then generate an extra step pulse to cross the bad track, locating a new track that now happens to be an extra track out.

Format Track

Format Command

	A_1	A_0	D_7	D_6	D_5	D_4	D_3	D_2	D_1	D_0
CMD:	0	0	SEL 1	SEL 0	1	0	0	0	1	1
PAR:	0	1	TRACK ADDRESS							
PAR:	0	1	GAP 3 SIZE MINUS 6							
PAR:	0	1	RECORD LENGTH			NO. OF SECTORS/TRACK				
PAR:	0	1	GAP 5 SIZE MINUS 6							
PAR:	0	1	GAP 1 SIZE MINUS 6							

The format command can be used to initialize a disk track compatible with the IBM 3740 format. A Shugart "IBM Type" mini-floppy format may also be generated.

The Format command can be used to initialize a diskette, one track at a time. When format command is used, the program must supply ID fields for each sector on the track. During command execution, the supplied ID fields (track head sector addresses and the sector length) are written sequentially on the diskette. The ID address marks originate from the 8271 and are written automatically as the first byte of each ID field. The CRC character is written in the last two bytes of the ID field and is derived from the data written in the first five bytes. During the formatting operation, the data field of each sector is filled with data pattern $(E5)_H$. The CRC, derived from the data pattern is also appended to the last byte.

1. The parameter 2 ($D_7 - D_5$) of the Format command specify record length, the bits are coded the same way as in the Read Data commands.
2. The programmable gap sizes (gap 3, gap 5, and gap 1) must be programmed such that the 6 bytes of zero (sync) are subtracted from the intended gap size i.e., if gap 1 is intended to be 16 bytes long, programmed length must be 16 – 6 = 10 bytes (of FF_H's).

Mini-Floppy Disk Format

The mini-floppy disk format differs from the standard disk format in the following ways:

1. Gap 5 and the Index Address mark have been eliminated.
2. There are fewer sectors/tracks.

GAPS

The following is the gap size and description summary:

Gap 1 Programmable
Gap 2 17 Bytes
Gap 3 Programmable
Gap 4 Variable
Gap 5 Programmable

The last six bytes of gaps 1,2,3 and 5 are $(00)_H$, all other bytes in the gaps are $(FF)_H$. The Gap 1,3 and 5 count specified by the user are the number of bytes of $(FF)_H$. Gap 4 is written until the leading edge of the index pulse. If a Gap 5 size of zero is specified, the Index Mark is not written.

Gap 1: N bytes FF's 6 bytes 0's for sync	This gap separates the index address mark of the index pulse from the first ID mark. It is used to protect the first ID field from a write on the last physical sector of the current track.
Gap 2: 11 bytes FF's 6 bytes 0's for sync	This gap separates the ID field from the data mark and field such that during a write only the data field will be changed even if the write gate turns on early, due to drive speed changes.
Gap 3: N bytes FF's 6 bytes 0's for sync	This gap separates a data area from the next ID field. It is used so that during drive speed changes the next ID mark will not be overwritten, thus causing loss of data.
Gap 4: FF's only	This gap fills out the rest of the disk and is used for slack during formatting. During drive speed variations this gap will shrink or grow if the disk is re-formatted.
Gap 5: N bytes FF's 6 bytes 0's for sync	This gap separates the last sector from the Index Address mark and is used to assure that the index address mark is not destroyed by writing on the last physical data sector on the track.

The number of FF bytes is programmable for gaps 1, 3 and 5.

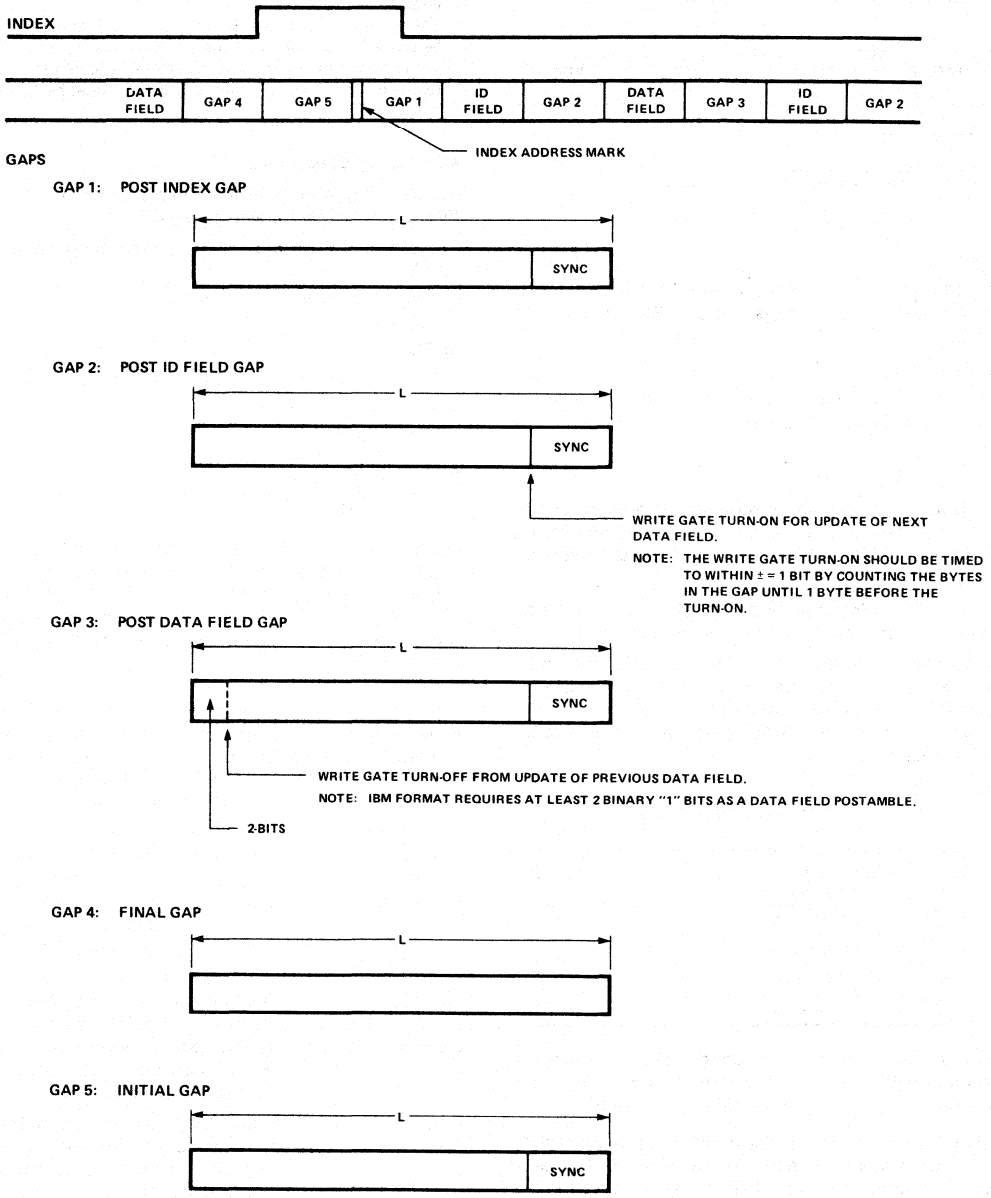

Figure 21. Track Format

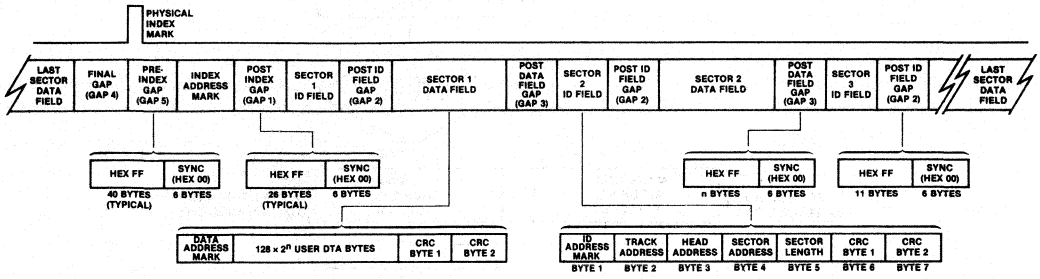

NUMBER OF SECTORS	NUMBER OF BYTES										
	GAP 1		ID FIELD	GAP 2		DATA FIELD	GAP 3		GAP 4	GAP 5	
	*ONES	SYNC		ONES	SYNC		*ONES	SYNC		*ONES	SYNC
26	26	6	7	11	6	131	27	6	275	40	6
15	26	6	7	11	6	259	48	6	129	40	6
8	26	6	7	11	6	515	90	6	146	40	6
4	26	6	7	11	6	1027	224	6	236	40	6
2	26	6	7	11	6	2051	255	6	719	40	6
1	26	6	7	11	6	4099	0	0	1007	40	6

*Program Specified

5208 Bytes Per Track

Figure 22. Standard Diskette Track Format

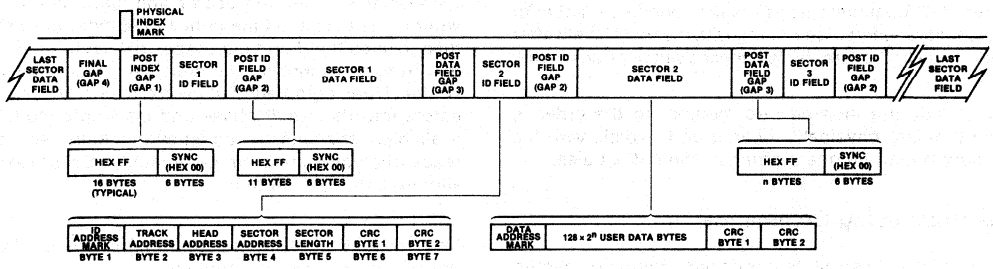

NUMBER OF SECTORS	NUMBER OF BYTES								
	GAP 1		ID FIELD	GAP 2		DATA FIELD	GAP 3		GAP 4
	*ONES	SYNC		ONES	SYNC		*ONES	SYNC	
18	16	6	7	11	6	131	11	6	24
10	16	6	7	11	6	259	21	6	30
5	16	6	7	11	6	515	74	6	88
2	16	6	7	11	6	1027	255	6	740
1	16	6	7	11	6	2051	0	0	1028

*Program Specified

3125 Bytes Per Track

Figure 23. Mini-Diskette Track Format

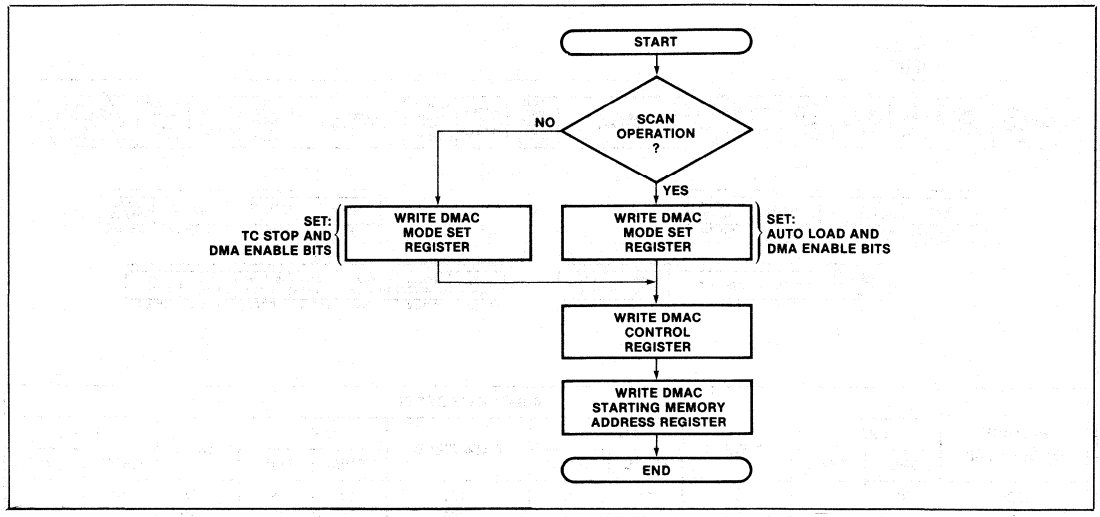

Figure 24. User DMA Channel Initialization Flowchart

Read ID Command

	A_1	A_0	D_7	D_6	D_5	D_4	D_3	D_2	D_1	D_0
CMD:	0	0	SEL 1	SEL 0	0	1	1	0	1	1
PAR:	0	1	TRACK ADDRESS							
PAR:	0	1	0	0	0	0	0	0	0	0
PAR:	0	1	NUMBER OF ID FIELDS							

The Read ID command transfers the specified number of ID fields into memory (beginning with the first ID field after Index). The CRC character is checked but not transferred.

These fields are entered into memory in the order in which they are physically located on the disk, with the first field being the one starting at the index pulse.

Data Processing Commands

All the routine Read/Write commands examine specific drive status lines before beginning execution, perform an implicit seek to the track address and load the drive's read/write head. Regardless of the type of command (i.e., read, write or verify), the 8271 first reads the ID field(s) to verify that the correct track has been located (see sector not found completion code) and also to locate the addressed sector. When a transfer is complete (or cannot be completed), the 8271 sets the interrupt request bit in the status register and provides an indication of the outcome of the operation in the result register.

If a CRC error is detected during a multisector transfer, processing is terminated with the sector in error. The address of the failing sector number can be determined by examining the Scan Sector Number register using the Read Special Register command.

Full power of the multisector read/write commands can be realized by doing DMA transfer using Intel® 8257 DMA Controller, For example, in a 128 byte per sector multisector write command, the entire data block (containing 128 bytes times the number of sectors) can be located in a disk memory buffer. Upon completion of the command phase, the 8271 begins execution by accessing the desired track, verifying the ID field, and locating the data field of the first record to be written. The 8271 then DMA-accesses the first sector and starts counting and writing one byte at a time until all 128 bytes are written. It then locates the data field of the next sector and repeats the procedure until all the specified sectors have been written. Upon completion of the execution phase the 8271 enters into the result phase and interrupts the CPU for availability of status and completion results. Note that all read/write commands, single or multisector are executed without CPU intervention.

Note, execution of multi-sector operations are faster if the sectors are *not* interleaved.

128 Byte Single Record Format

	A_1	A_0	D_7	D_6	D_5	D_4	D_3	D_2	D_1	D_0
CMD:	0	0	SEL 1	SEL 0	COMMAND OPCODE					
PAR:	0	1	TRACK ADDR 0-255							
PAR:	0	1	SECTOR 0-255							

Commands	Opcode
READ DATA	12
READ DATA AND DELETED DATA	16
WRITE DATA	0A
WRITE DELETED DATA	0E
VERIFY DATA AND DELETED DATA	1E

Variable Length/Multi-Record Format

	A_1	A_0	D_7	D_6	D_5	D_4	D_3	D_2	D_1	D_0
CMD:	0	0	SEL 1	SEL 0	COMMAND OPCODE					
PAR:	0	1	TRACK ADDR 0-255							
PAR:	0	1	SECTOR 0-255							
PAR:	0	1	LENGTH				NO. OF SECTORS			

D_7-D_5 of Parameter 2 determine the length of the disk record.

0 0 0	128 Bytes
0 0 1	256 Bytes
0 1 0	512 Bytes
0 1 1	1024 Bytes
1 0 0	2048 Bytes
1 0 1	4096 Bytes
1 1 0	8192 Bytes
1 1 1	16,384 Bytes

Commands	Opcode
READ DATA	13
READ DATA AND DELETED DATA	17
WRITE DATA	0B
WRITE DELETED DATA	0F
VERIFY DATA AND DELETED DATA	1F
SCAN DATA	00
SCAN DATA AND DELETED DATA	04

Read Commands

Read Data, Read Data and Deleted Data.

Function

The read command transfers data from a specified disk record or group of records to memory. The operation of this command is outlined in execution phase table.

Write Commands

Write Data, Write Deleted Data.

Function

The write command transfers data from memory to a specified disk record or group of records.

Verify Command

Verify Data and Deleted Data.

Function

The verify command is identical to the read data and deleted data command except that the data is not transferred to memory. This command is used to check that a record or a group of records has been written correctly by verifying the CRC character.

Scan Commands

	A_1	A_0	D_7	D_6	D_5	D_4	D_3	D_2	D_1	D_0
CMD:	0	0	SEL 1	SEL 0	0	0	0	S.DATA S.DELD	0	0
PAR:	0	1	TRACK ADDR 0-255							
PAR:	0	1	SECTOR 0-255							
PAR:	0	1	LENGTH				NO. OF SECTORS			
PAR:	0	1	SCAN TYPE		STEP SIZE					
PAR:	0	1	FIELD LENGTH (KEY)							

Command $D_2 = 0$ Scan Data
$D_2 = 1$ Scan Data and Deleted Data

Scan Commands, Scan Data and Scan Data and Deleted Data, are used to search a specific data pattern or "key" from memory. The 8271 FDC operation during a scan is unique in that data is read from memory and from the diskette simultaneously.

During the scan operation, the key is compared repetitively (using the 8257 DMA Controller in auto load mode) with the data read from the diskette (e.g., an eight byte key would be compared with the first eight bytes (1-8) read from the diskette, the second eight bytes (9-16), the third eight bytes (17-24), etc.). The scan operation is concluded when the key is located or when the specified number of sectors have been searched without locating the key. When concluded, the 8271 FDC requests an interrupt. The program must then read the result register to determine if the scan was successful (if the key was located). If successful, several of the FDC's special registers can be examined (read special registers command) to determine more specific information relating to the scan (i.e., the sector number in which the key was located, and the number of bytes within the sector that were not compared when the key was located).

The 8271 does not do a sliding scan, it does a fixed block linear search. This means the key in memory is compared to an equal length block in a sector; when these blocks meet the scan conditions the scan will stop. Otherwise, the scan continues until all the sectors specified have been searched.

The following factors regarding key length must be considered when establishing a key in memory.

1. When searching multiple sectors, the length of the key must be evenly divisible into the sector length to prevent the key from being split at subsequent sector boundaries. Since the character FF_H is not compared, the key in memory can be padded to the required length using this character. For example, if the actual pattern compared on the diskette is twelve characters in length, the field length should be sixteen and four bytes of FF_H

would be appended to the key. Consequently, the last block of sixteen bytes compared within the first sector would end at the sector boundary and the first byte of the next sector would be compared with the first byte of the key. Splitting data over sector boundarys will not work properly since the FDC expects the start of key at each sector boundary.

2. Since the first byte of the key is compared with the first byte of the sector, when the pattern does not begin with the first byte of the sector, the key must be offset using the character FF_{16}. For example, if the first byte of a nine byte pattern begins on the fifth byte of the sector, four bytes of FF_{16} are prefixed to the key (and three bytes of FF_{16} are appended to the key to meet the length requirement) so that the first actual comparison begins on the fifth byte.

The Scan Commands require five parameters:

Parameter 0, Track Address

Specifies the track number containing the sectors to be scanned. Legal values range from 00_H to $4C_H$ (0 to 76) for a standard diskette and from 00_H to 22_H (0 to 34) for a mini-sized diskette.

Parameter 1, Sector Address

Specifies the first sector to be scanned. The number of sectors scanned is specified in parameter 2, and the order in which sectors are scanned is specified in parameter 3.

Parameter 2, Sector Length/Number of Sectors

The sector length field (bits 7-5) specifies the number of data bytes allocated to each sector (see parameter 2, routine read and write commands for field interpretation). The number of sectors field (bits 4-0) specifies the number of sectors to be scanned. The number specified ranges from one sector to the physical number of sectors on the track.

Parameter 3

D_7-D_6: Indicate scan type

00-EQ Scan for each character within the field length (key) equal to the corresponding character within the disk sector. The scan stops after the first equal condition is met.

01-GEQ Scan for each character within the disk sector greater than or equal to the corresponding character within the field length (key). The scan stops after the first greater than or equal condition is met.

10-LEQ Scan for each character within the disk sector less than or equal to the corresponding character within the field length (key). The scan stops after the first less than or equal condition is met.

D_5-D_0: Step Size: The Step Size field specifies the offset to the next sector in a multisector scan. In this case, the next sector address is generated by adding the Step Size to the current sector address.

Parameter 4, Field Length

Specifies the number of bytes to be compared (length of key). While the range of legal values is from 1 to 255, the field length specified should be evenly divisible into the sector length to prevent the key from being split at sector boundaries, if the multisector scan commands are used.

Scan Command Results

More detailed information about the completion of Scan Commands may be obtained by executing Read Special Register commands.

Read Special Register

Parameter (Hex)	Results
06	The sector number of the sector in which the specified scan data pattern was located.
14	MSB Count — The number of 128 byte blocks remaining to be compared in the current sector when the scan data pattern was located. This register is decremented with each 128 byte block read.
13	LSB Count — The number of bytes remaining to be compared in the current sector when the scan data pattern is located. This register is initialized to 128 and is decremented with each byte compared.

Upon a scan met condition, the equation below can be used to determine the last byte in the located pattern.

Pointer = sector length – ((Register 14H)*128 + (Register 13H))

8271 Scan Command Example

Assume there are only 2 records on track 0 with the following data:

Record 01: 01 02 03 04 05 06 07 08 000....00
Record 02: 01 02 AA 55 00 00 00 00 00

Command	Field Length [1]	Starting Sector #	# of Sectors	Key [2]	Completion Code [3]	Special Registers [4] R06	R14	R13	Comment
* SCAN EQ	2	1	1	01,02	SME	01	0	127D	Met in first field
SCAN EQ	2	1	1	02,03	SNM	X	X	X	Not met
SCAN EQ	2	1	1	FF[5],05	SNM	X	X	X	Not met with don't care
* SCAN EQ	2	1	1	FF[5],06	SME	01	0	123D	Met with don't care
* SCAN EQ	2	1	2	AA,55	SME	02	0	125D	Met in Record 02
* SCAN EQ	2	2	1	01,02	SME	02	0	127D	Starting sector ≠ 1
* SCAN EQ	4	1	1	05,06,07,08	SME	01	0	121D	Field, Key length = 4
* SCAN GEQ	4	1	1	05,06,07,08	SME	01	0	121D	GEQ-SME
* SCAN GEQ	4	1	1	05,04,07,08	SMNE	01	0	121D	GEQ-SMNE
* SCAN GEQ	4	1	2	00,03,AA,44 [6]	SNM	X	X	X	GEQ-SNM
* SCAN LEQ	4	1	1	01,03,FF,04	SMNE	01	0	125D	LEQ-SMNE
* SCAN LEQ	4	1	1	01,02,FF,04	SME	01	0	125D	LEQ-SME

NOTES:

1. Field Length — Each record is partitioned into a number of fields equal to the record size divided by the field length. Note that the record size should be evenly divisable by the field length to insure proper operation of multi record scan. Also, maximum field length = 256 bytes.

2. Key — The key is a string of bytes located in the user system memory. The key length should equal the field length. By programming the 8257 DMA Controller into the auto load mode, the key will be recursively read in by the chip (once per field).

3. Completion Code — Shows how Scan command was met or not met.
   SNM — SCAN Not Met — 0 0 (also Good Complete)
   SME — SCAN Met Equal — 0 1
   SMNE — SCAN Met Not Equal — 1 0

4. Special Registers
   R06 — This register contains the record number where the scan was met.
   R14 — This register contains the MSB count and is decremented every 128 characters.

Length (ℓ) (D7-D5 of PAR 2)	Record Size	R14 = $2^{\ell} - 1$ (Initialize at Beginning of Record)
000	128 Bytes	0
001	256 Bytes	1
010	512 Bytes	3
011	1024 Bytes	7
•	•	•
•	•	•
•	•	•

   R13 — This register contains a modulo 128 LSB count which is initialized to 128 at beginning of each record. This count is decremented after each character is compared except for the last character in a pattern match situation.

5. The OFF_H character in the key is treated as a don't care character position.

6. The Scan comparison is done on a byte by byte basis. That is, byte 1 of each field is compared to byte 1 of the key, byte 2 of each field is compared to byte 2 of the key, etc.

ABSOLUTE MAXIMUM RATINGS*

Ambient Temperature Under Bias.....0°C to 70°C[1]
Storage Temperature.....−65°C to +150°C
Voltage on Any Pin with
Respect to Ground.....−0.5V to +7V
Power Dissipation.....1 Watt

**NOTICE: Stresses above those listed under "Absolute Maximum Ratings" may cause permanent damage to the device. This is a stress rating only and functional operation of the device at these or any other conditions above those indicated in the operational sections of this specification is not implied. Exposure to absolute maximum rating conditions for extended periods may affect device reliability.*

D.C. CHARACTERISTICS (V_{CC} = +5.0V ±5%
8721 and 8271-8: T_A = 0°C to 70°C; 8271-6: T_A = 0°C to 50°C)

Symbol	Parameter	Min.	Max.	Unit	Test Conditions
V_{IL}	Input Low Voltage	−0.5	0.8	V	
V_{IH}	Input High Voltage	2.0	(V_{CC} + 0.5)	V	
V_{OLD}	Output Low Voltage (Data Bus)		0.45	V	I_{OL} = 2.0 mA
V_{OLI}	Output Low Voltage (Interface Pins)		0.5	V	I_{OL} = 1.6 mA
V_{OH}	Output High Voltage	2.4		V	I_{OH} = −220 μA
I_{IL}	Input Load Current		±10	μA	V_{IN} = V_{CC} to 0V
I_{OZ}	Off-State Output Current		±10	μA	V_{OUT} = V_{CC} to 0.45V
I_{CC}	V_{CC} Supply Current		180	mA	

CAPACITANCE (T_A = 25°C; V_{CC} = GND = 0V)

Symbol	Parameter	Min.	Typ.	Max.	Unit	Test Conditions
C_{IN}	Input Capacitance			10	pF	t_c = 1 MHz
$C_{I/O}$	I/O Capacitance			20	pF	Unmeasured Pins Returned to GND

NOTE: 1. Ambient temperature under bias for 8271-6 is 0°C to 50°C.

A.C. CHARACTERISTICS (V_{CC} = +5.0V ±5%)
(8271 and 8271-8: T_A = 0°C to 70°C; 8271-6: T_A = 0°C to 50°C)

READ CYCLE

Symbol	Parameter	Min.	Max.	Unit	Test Conditions
t_{AC}	Select Setup to $\overline{RD}$	0		ns	Note 2
t_{CA}	Select Hold from $\overline{RD}$	0		ns	Note 2
t_{RR}	$\overline{RD}$ Pulse Width	250		ns	
t_{AD}	Data Delay from Address		250	ns	Note 2
t_{RD}	Data Delay from $\overline{RD}$		150	ns	C_L = 150 pF, Note 2
t_{DF}	Output Float Delay	20	100	ns	C_L = 20 pF for Minimum; 150 pF for Maximum
t_{DC}	DACK Setup to $\overline{RD}$	25		ns	
t_{CD}	DACK Hold from $\overline{RD}$	25		ns	
t_{KD}	Data Delay from DACK		250	ns	

A.C. CHARACTERISTICS (Continued)

WRITE CYCLE

Symbol	Parameter	Min.	Max.	Unit	Test Conditions
t_{AC}	Select Setup to $\overline{WR}$	0		ns	
t_{CA}	Select Hold from $\overline{WR}$	0		ns	
t_{WW}	$\overline{WR}$ Pulse Width	250		ns	
t_{DW}	Data Setup to $\overline{WR}$	150		ns	
t_{WD}	Data Hold from $\overline{WR}$	0		ns	
t_{DC}	DACK Setup to $\overline{WR}$	25		ns	
t_{CD}	DACK Hold from $\overline{WR}$	25		ns	

DMA

Symbol	Parameter	Min.	Max.	Unit	Test Conditions
t_{CQ}	Request Hold from $\overline{WR}$ or $\overline{RD}$ (for Non-Burst Mode)		150	ns	

OTHER TIMINGS

Symbol	Parameter	8271/8271-6		Unit	Test Conditions
		Min.	Max.		
t_{RSTW}	Reset Pulse Width	10		t_{CY}	
t_r	Input Signal Rise Time		20	ns	
t_f	Input Signal Fall Time		20	ns	
t_{RSTS}	Reset to First IOWR	2		t_{CY}	
t_{CY}	Clock Period	250			Note 3
t_{CL}	Clock Low Period	110		ns	
t_{CH}	Clock High Period	125		ns	
t_{DS}	Data Window Setup to Unseparated Clock and Data	50		ns	
t_{DH}	Data Window Hold from Unseparated Clock and Data	0		ns	

NOTES:
1. All timing measurements are made at the reference voltages unless otherwise specified: Input "1" at 2.0V, "0" at 0.8V
   Output "1" at 2.0V, "0" at 0.8V
2. t_{AD}, t_{RD}, t_{AC}, and t_{CA} are not concurrent specs.
3. Standard Floppy: $t_{CY} = 250$ ns $\pm 0.4\%$ Mini-Floppy: $t_{CY} = 500$ ns $\pm 0.4\%$

A.C. TESTING INPUT, OUTPUT WAVEFORM

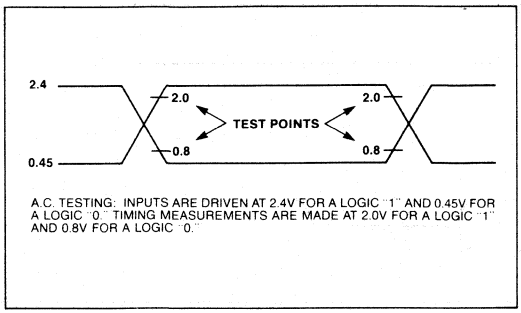

A.C. TESTING: INPUTS ARE DRIVEN AT 2.4V FOR A LOGIC "1" AND 0.45V FOR A LOGIC "0". TIMING MEASUREMENTS ARE MADE AT 2.0V FOR A LOGIC "1" AND 0.8V FOR A LOGIC "0".

A.C. TESTING LOAD CIRCUIT

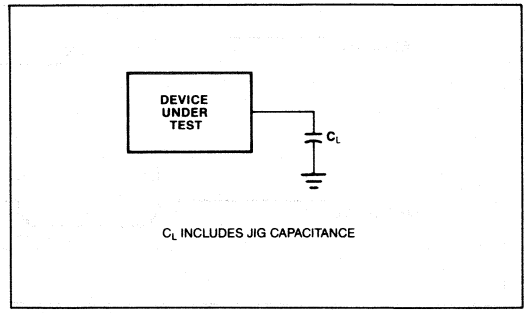

C_L INCLUDES JIG CAPACITANCE

WAVEFORMS

READ

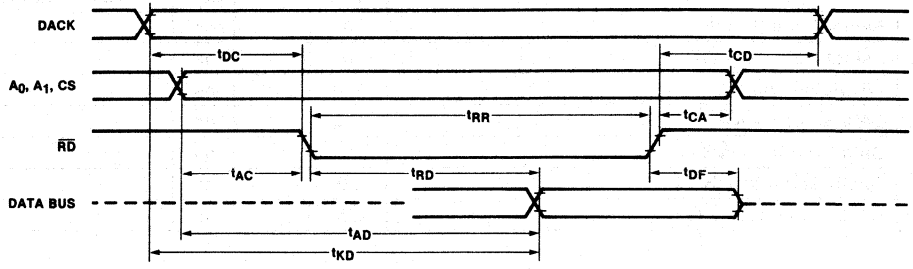

WRITE

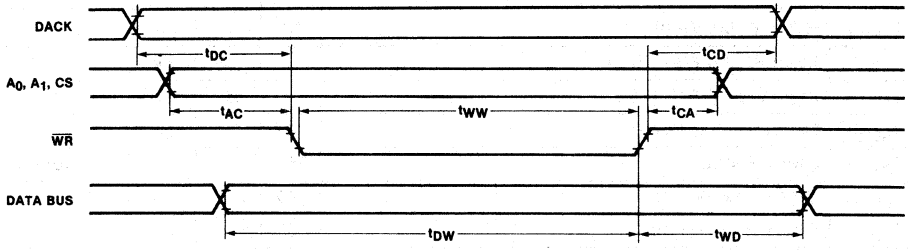

DMA

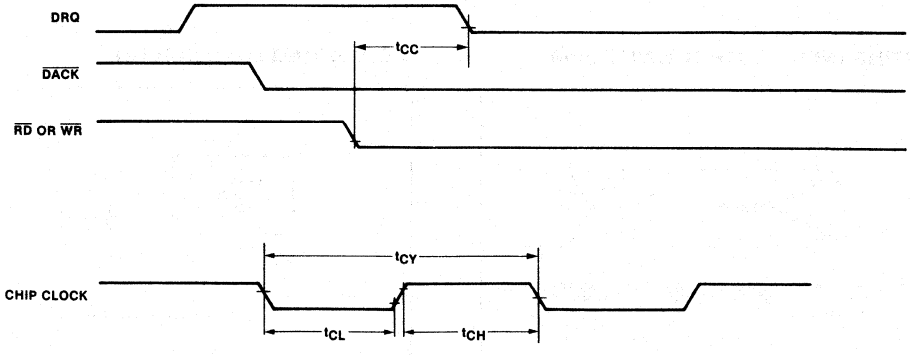

WAVEFORMS (Continued)

READ DATA

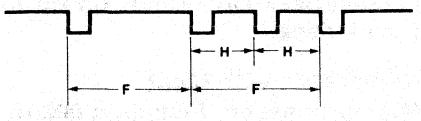

*t_{CY} = 250 ns **t_{CY} = 500 ns

F = 16 t_{CY} ±8 t_{CY}
H = 8 t_{CY} ±4 t_{CY}

*STANDARD FLEXIBLE DISK DRIVE TIMING
**MINI-FLOPPY TIMING

WRITE DATA

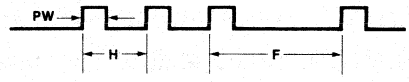

PULSE WIDTH PW = t_{CY} ±30 ns
H (HALF BIT CELL) = 8 t_{CY}
F (FULL BIT CELL) = 16 t_{CY}

*t_{CY} =	250 ns ±0.4%	**t_{CY} =	500 ns ±0.4%
	250 ns ±30 ns		500 ns ±30 ns
	2.0 μs ± 8 ns		4.0 μs ±16 ns
	4.0 μs ±16 ns		8.0 μs ±32 ns

SINGLE-SHOT DATA SEPARATOR

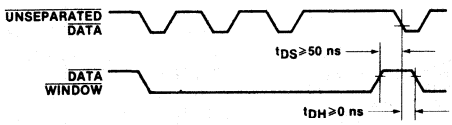

PLO DATA SEPARATOR

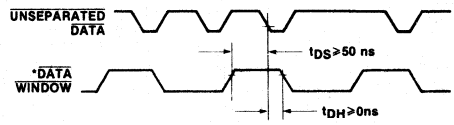

*DATA WINDOW MAY BE 180° OUT OF PHASE IN PLO DATA SEPARATION MODE.

8272
SINGLE/DOUBLE DENSITY FLOPPY DISK CONTROLLER

- **IBM Compatible in Both Single and Double Density Recording Formats**
- **Programmable Data Record Lengths: 128, 256, 512, or 1024 Bytes/Sector**
- **Multi-Sector and Multi-Track Transfer Capability**
- **Drive Up to 4 Floppy Disks**
- **Data Scan Capability — Will Scan a Single Sector or an Entire Cylinder's Worth of Data Fields, Comparing on a Byte by Byte Basis, Data in the Processor's Memory with Data Read from the Diskette**
- **Data Transfers in DMA or Non-DMA Mode**
- **Parallel Seek Operations on Up to Four Drives**
- **Compatible with Most Microprocessors Including 8080A, 8085A, 8086 and 8088**
- **Single-Phase 8 MHz Clock**
- **Single +5 Volt Power Supply**
- **Available in 40-Pin Plastic Dual-in-Line Package**

The 8272 is an LSI Floppy Disk Controller (FDC) Chip, which contains the circuitry and control functions for interfacing a processor to 4 Floppy Disk Drives. It is capable of supporting either IBM 3740 single density format (FM), or IBM System 34 Double Density format (MFM) including double sided recording. The 8272 provides control signals which simplify the design of an external phase locked loop, and write precompensation circuitry. The FDC simplifies and handles most of the burdens associated with implementing a Floppy Disk Drive Interface.

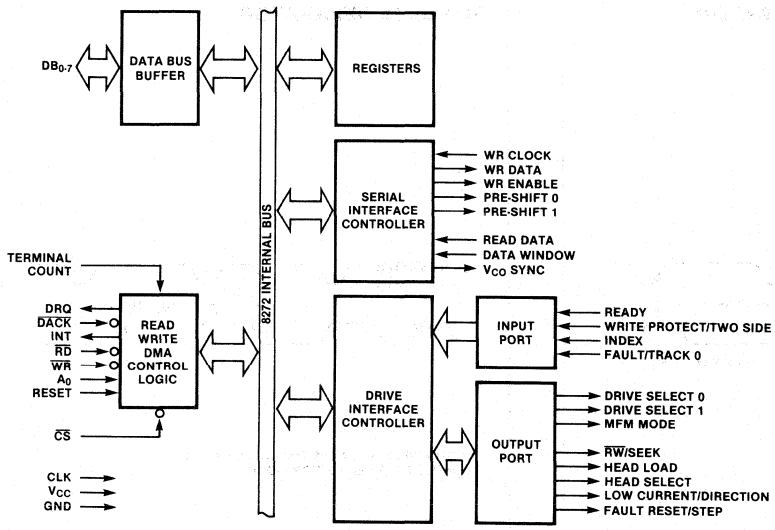

Figure 1. 8272 Internal Block Diagram

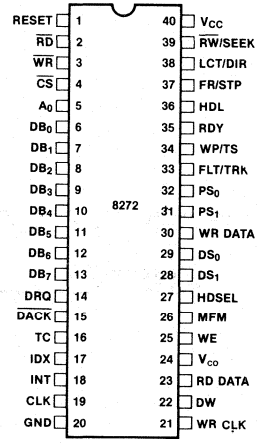

Figure 2. Pin Configuration

AFN-01259B

Table 1. Pin Description

Symbol	Pin No.	Type	Connection To	Name and Function
RST	1	I	μP	**Reset:** Places FDC in idle state. Resets output lines to FDD to "0" (low).
$\overline{RD}$	2	I[1]	μP	**Read:** Control signal for transfer of data from FDC to Data Bus, when "0" (low).
$\overline{WR}$	3	I[1]	μP	**Write:** Control signal for transfer of data to FDC via Data Bus, when "0" (low).
$\overline{CS}$	4	I	μP	**Chip Select:** IC selected when "0" (low), allowing $\overline{RD}$ and $\overline{WR}$ to be enabled.
A_0	5	I[1]	μP	**Data/Status Register Select:** Selects Data Reg (A_0 = 1) or Status Reg (A_0 = 0) content be sent to Data Bus.
DB_0-DB_7	6–13	I/O[1]	μP	**Data Bus:** Bidirectional 8-Bit Data Bus.
DRQ	14	O	DMA	**Data DMA Request:** DMA Request is being made by FDC when DRQ "1."
$\overline{DACK}$	15	I	DMA	**DMA Acknowledge:** DMA cycle is active when "0" (low) and Controller is performing DMA transfer.
TC	16	I	DMA	**Terminal Count:** Indicates the termination of a DMA transfer when "1" (high)[2].
IDX	17	I	FDD	**Index:** Indicates the beginning of a disk track.
INT	18	O	μP	**Interrupt:** Interrupt Request Generated by FDC.
CLK	19	I		**Clock:** Single Phase 8 MHz Squarewave Clock.
GND	20			**Ground:** D.C. Power Return.
V_{CC}	40			**D.C. Power:** +5V
$\overline{RW}$/SEEK	39	O	FDD	**Read Write / SEEK:** When "1" (high) Seek mode selected and when "0" (low) Read/Write mode selected.
LCT/DIR	38	O	FDD	**Low Current/Direction:** Lowers Write current on inner tracks in Read/Write mode, determines direction head will step in Seek mode.
FR/STP	37	O	FDD	**Fault Reset/Step:** Resets fault FF in FDD in Read/Write mode, provides step pulses to move head to another cylinder in Seek mode.
HDL	36	O	FDD	**Head Load:** Command which causes read/write head in FDD to contact diskette.
RDY	35	I	FDD	**Ready:** Indicates FDD is ready to send or receive data.
WP/TS	34	I	FDD	**Write Protect / Two-Side:** Senses Write Protect status in Read/Write mode, and Two Side Media in Seek mode.
FLT/TRK0	33	I	FDD	**Fault/Track 0:** Senses FDD fault condition in Read/Write mode and Track 0 condition in Seek mode.
PS_1,PS_0	31,32	O	FDD	**Precompensation (preshift):** Write precompensation status during MFM mode. Determines early, late, and normal times.
WR DATA	30	O	FDD	**Write Data:** Serial clock and data bits to FDD.
DS_1,DS_0	28,29	O	FDD	**Drive Select:** Selects FDD unit.
HDSEL	27	O	FDD	**Head Select:** Head 1 selected when "1" (high) Head 0 selected when "0" (low).

Note 1: Disabled when $\overline{CS}$=1.

Note 2: TC must be activated to terminate the Execution Phase of any command.

Table 1. Pin Description (Continued)

Symbol	Pin No.	Type	Connection To	Name and Function
MFM	26	O	PLL	**MFM Mode:** MFM mode when "1," FM mode when "0."
WE	25	O	FDD	**Write Enable:** Enables write data into FDD.
VCO	24	O	PLL	**VCO Sync:** Inhibits VCO in PLL when "0" (low), enables VCO when "1."
RD DATA	23	I	FDD	**Read Data:** Read data from FDD, containing clock and data bits.
DW	22	I	PLL	**Data Window:** Generated by PLL, and used to sample data from FDD.
WR CLK	21	I		**Write Clock:** Write data rate to FDD FM = 500 kHz, MFM = 1 MHz, with a pulse width of 250 ns for both FM and MFM. Must be enabled for all operations, both Read and Write.

8272 SYSTEM BLOCK DIAGRAM

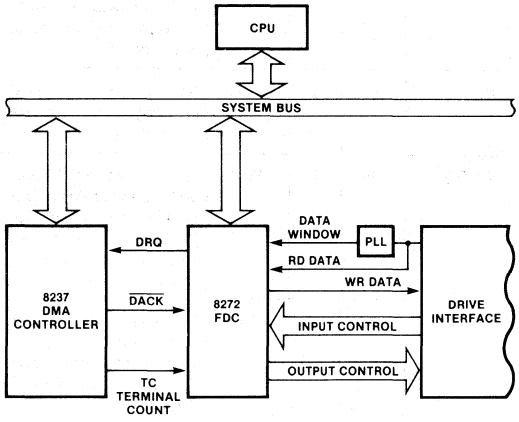

DESCRIPTION

Hand-shaking signals are provided in the 8272 which make DMA operation easy to incorporate with the aid of an external DMA Controller chip, such as the 8237. The FDC will operate in either DMA or Non-DMA mode. In the Non-DMA mode, the FDC generates interrupts to the processor for every transfer of a data byte between the CPU and the 8272. In the DMA mode, the processor need only load a command into the FDC and all data transfers occur under control of the 8272 and DMA controller.

There are 15 separate commands which the 8272 will execute. Each of these commands require multiple 8-bit bytes to fully specify the operation which the processor wishes the FDC to perform. The following commands are available.

Read Data	Write Data
Read ID	Format a Track
Read Deleted Data	Write Deleted Data
Read a Track	Seek
Scan Equal	Recalibrate (Restore to Track 0)
Scan High or Equal	Sense Interrupt Status
Scan Low or Equal	Sense Drive Status
Specify	

FEATURES

Address mark detection circuitry is internal to the FDC which simplifies the phase locked loop and read electronics. The track stepping rate, head load time, and head unload time may be programmed by the user. The 8272 offers many additional features such as multiple sector transfers in both read and write modes with a single command, and full IBM compatibility in both single (FM) and double density (MFM) modes.

8272 REGISTERS — CPU INTERFACE

The 8272 contains two registers which may be accessed by the main system processor; a Status Register and a Data Register. The 8-bit Main Status Register contains the status information of the FDC, and may be accessed at any time. The 8-bit Data Register (actually consists of several registers in a stack with only one register presented to the data bus at a time), stores data, commands, parameters, and FDD status information. Data bytes are read out of, or written into, the Data Register in order to program or obtain the results after execution of a command. The Status Register may only be read and is used to facilitate the transfer of data between the processor and 8272.

The relationship between the Status/Data registers and the signals $\overline{RD}$, $\overline{WR}$, and A_0 is shown below.

A_0	$\overline{RD}$	$\overline{WR}$	FUNCTION
0	0	1	Read Main Status Register
0	1	0	Illegal
0	0	0	Illegal
1	0	0	Illegal
1	0	1	Read from Data Register
1	1	0	Write into Data Register

The bits in the Main Status Register are defined as follows:

BIT NUMBER	NAME	SYMBOL	DESCRIPTION
DB_0	FDD 0 Busy	D_0B	FDD number 0 is in the Seek mode.
DB_1	FDD 1 Busy	D_1B	FDD number 1 is in the Seek mode.
DB_2	FDD 2 Busy	D_2B	FDD number 2 is in the Seek mode.
DB_3	FDD 3 Busy	D_3B	FDD number 3 is in the Seek mode.
DB_4	FDC Busy	CB	A read or write command is in process.
DB_5	Non-DMA mode	NDM	The FDC is in the non-DMA mode. This bit is set only during the execution phase in non-DMA mode. Transition to "0" state indicates execution phase has ended.
DB_6	Data Input/Output	DIO	Indicates direction of data transfer between FDC and Data Register. If DIO = "1" then transfer is from Data Register to the Processor. If DIO = "0", then transfer is from the Processor to Data Register.
DB_7	Request for Master	RQM	Indicates Data Register is ready to send or receive data to or from the Processor. Both bits DIO and RQM should be used to perform the handshaking functions of "ready" and "direction" to the processor.

The DIO and RQM bits in the Status Register indicate when Data is ready and in which direction data will be transferred on the Data Bus.

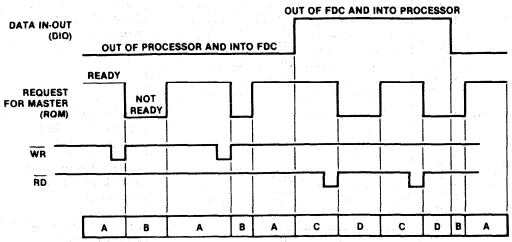

NOTES: [A] — DATA REGISTER READY TO BE WRITTEN INTO BY PROCESSOR
[B] — DATA REGISTER NOT READY TO BE WRITTEN INTO BY PROCESSOR
[C] — DATA REGISTER READY FOR NEXT DATA BYTE TO BE READ BY THE PROCESSOR
[D] — DATA REGISTER NOT READY FOR NEXT DATA BYTE TO BE READ BY PROCESSOR

STATUS REGISTER TIMING

The 8272 is capable of executing 15 different commands. Each command is initiated by a multi-byte transfer from the processor, and the result after execution of the command may also be a multi-byte transfer back to the processor. Because of this multi-byte interchange of information between the 8272 and the processor, it is convenient to consider each command as consisting of three phases:

Command Phase: The FDC receives all information required to perform a particular operation from the processor.

Execution Phase: The FDC performs the operation it was instructed to do.

Result Phase: After completion of the operation, status and other housekeeping information are made available to the processor.

During Command or Result Phases the Main Status Register (described earlier) must be read by the processor before each byte of information is written into or read from the Data Register. Bits D6 and D7 in the Main Status Register must be in a 0 and 1 state, respectively, before each byte of the command word may be written into the 8272. Many of the commands require multiple bytes, and as a result the Main Status Register must be read prior to each byte transfer to the 8272. On the other hand, during the Result Phase, D6 and D7 in the Main Status Register must both be 1's (D6 = 1 and D7 = 1) before reading each byte from the Data Register. Note, this reading of the Main Status Register before each byte transfer to the 8272 is required in only the Command and Result Phases, and NOT during the Execution Phase.

During the Execution Phase, the Main Status Register need not be read. If the 8272 is in the Non-DMA Mode, then the receipt of each data byte (if 8272 is reading data from FDD) is indicated by an Interrupt signal on pin 18 (INT = 1). The generation of a Read signal ($\overline{RD} = 0$) will reset the Interrupt as well as output the Data onto the Data Bus. For example, if the processor cannot handle Interrupts fast enough (every 13 μs for MFM mode) then it may poll the Main Status Register and then bit D7 (RQM) functions just like the Interrupt signal. If a Write Command is in process then the $\overline{WR}$ signal performs the reset to the Interrupt signal.

If the 8272 is in the DMA Mode, no Interrupts are generated during the Execution Phase. The 8272 generates DRQ's (DMA Requests) when each byte of data is available. The DMA Controller responds to this request with both a $\overline{DACK} = 0$ (DMA Acknowledge) and a $\overline{RD} = 0$ (Read signal). When the DMA Acknowledge signal goes low ($\overline{DACK} = 0$) then the DMA Request is reset (DRQ = 0). If a Write Command has been programmed then a $\overline{WR}$ signal will appear instead of $\overline{RD}$. After the Execution Phase has been completed (Terminal Count has occurred) then an Interrupt will occur (INT = 1). This signifies the beginning of the Result Phase. When the first byte of data is read during the Result Phase, the Interrupt is automatically reset (INT = 0).

It is important to note that during the Result Phase all bytes shown in the Command Table must be read. The Read Data Command, for example, has seven bytes of

data in the Result Phase. All seven bytes must be read in order to successfully complete the Read Data Command. The 8272 will not accept a new command until all seven bytes have been read. Other commands may require fewer bytes to be read during the Result Phase.

The 8272 contains five Status Registers. The Main Status Register mentioned above may be read by the processor at any time. The other four Status Registers (ST0, ST1, ST2, and ST3) are only available during the Result Phase, and may be read only after successfully completing a command. The particular command which has been executed determines how many of the Status Registers will be read.

The bytes of data which are sent to the 8272 to form the Command Phase, and are read out of the 8272 in the Result Phase, must occur in the order shown in the Command Table. That is, the Command Code must be sent first and the other bytes sent in the prescribed sequence. No foreshortening of the Command or Result Phases are allowed. After the last byte of data in the Command Phase is sent to the 8272 the Execution Phase automatically starts. In a similar fashion, when the last byte of data is read out in the Result Phase, the command is automatically ended and the 8272 is ready for a new command. A command may be aborted by simply sending a Terminal Count signal to pin 16 (TC = 1). This is a convenient means of ensuring that the processor may always get the 8272's attention even if the disk system hangs up in an abnormal manner.

POLLING FEATURE OF THE 8272

After the Specify command has been sent to the 8272, the Drive Select Lines DS0 and DS1 will automatically go into a polling mode. In between commands (and between step pulses in the SEEK command) the 8272 polls all four FDDs looking for a change in the Ready line from any of the drives. If the Ready line changes state (usually due to a door opening or closing) then the 8272 will generate an interrupt. When Status Register 0 (ST0) is read (after Sense Interrupt Status is issued), Not Ready (NR) will be indicated. The polling of the Ready line by the 8272 occurs continuously between instructions, thus notifying the processor which drives are on or off line.

Table 2. 8272 Command Set

PHASE	R/W	DATA BUS D_7	D_6	D_5	D_4	D_3	D_2	D_1	D_0	REMARKS
READ DATA										
Command	W	MT	MFM	SK	0	0	1	1	0	Command Codes
	W	0	0	0	0	0	HDS	DS1	DS0	
	W				C					Sector ID information prior to Command execution
	W				H					
	W				R					
	W				N					
	W				EOT					
	W				GPL					
	W				DTL					
Execution										Data transfer between the FDD and main-system
Result	R				ST 0					Status information after Command execution
	R				ST 1					
	R				ST 2					
	R				C					Sector ID information after command execution
	R				H					
	R				R					
	R				N					
READ DELETED DATA										
Command	W	MT	MFM	SK	0	1	1	0	0	Command Codes
	W	0	0	0	0	0	HDS	DS1	DS0	
	W				C					Sector ID information prior to Command execution
	W				H					
	W				R					
	W				N					
	W				EOT					
	W				GPL					
	W				DTL					
Execution										Data transfer between the FDD and main-system
Result	R				ST 0					Status information after Command execution
	R				ST 1					
	R				ST 2					
	R				C					Sector ID information after Command execution
	R				H					
	R				R					
	R				N					

PHASE	R/W	DATA BUS D_7	D_6	D_5	D_4	D_3	D_2	D_1	D_0	REMARKS
WRITE DATA										
Command	W	MT	MFM	0	0	0	1	0	1	Command Codes
	W	0	0	0	0	0	HDS	DS1	DS0	
	W				C					Sector ID information prior to Command execution
	W				H					
	W				R					
	W				N					
	W				EOT					
	W				GPL					
	W				DTL					
Execution										Data transfer between the main-system and FDD
Result	R				ST 0					Status information after Command execution
	R				ST 1					
	R				ST 2					
	R				C					Sector ID information after Command execution
	R				H					
	R				R					
	R				N					
WRITE DELETED DATA										
Command	W	MT	MFM	0	0	1	0	0	1	Command Codes
	W	0	0	0	0	0	HDS	DS1	DS0	
	W				C					Sector ID information prior to Command execution
	W				H					
	W				R					
	W				N					
	W				EOT					
	W				GPL					
	W				DTL					
Execution										Data transfer between the FDD and main-system
Result	R				ST 0					Status information after Command execution
	R				ST 1					
	R				ST 2					
	R				C					Sector ID information after Command execution
	R				H					
	R				R					
	R				N					

Note: 1. Symbols used in this table are described at the end of this section.
2. $A_0 = 1$ for all operations.
3. X = Don't care, usually made to equal binary 0.

Table 2. 8272 Command Set (Continued)

PHASE	R/W	DATA BUS D_7	D_6	D_5	D_4	D_3	D_2	D_1	D_0	REMARKS
READ A TRACK										
Command	W	0	MFM	SK	0	0	0	1	0	Command Codes
	W	0	0	0	0	0	HDS	DS1	DS0	
	W	C								Sector ID information prior to Command execution
	W	H								
	W	R								
	W	N								
	W	EOT								
	W	GPL								
	W	DTL								
Execution										Data transfer between the FDD and main-system. FDC reads all of cylinders contents from index hole to EOT
Result	R	ST 0								Status information after Command execution
	R	ST 1								
	R	ST 2								
	R	C								Sector ID information after Command execution
	R	H								
	R	R								
	R	N								
READ ID										
Command	W	0	MFM	0	0	1	0	1	0	Commands
	W	0	0	0	0	0	HDS	DS1	DS0	
Execution										The first correct ID information on the Cylinder is stored in Data Register
Result	R	ST 0								Status information after Command execution
	R	ST 1								
	R	ST 2								
	R	C								Sector ID information during Execution Phase
	R	H								
	R	R								
	R	N								
FORMAT A TRACK										
Command	W	0	MFM	0	0	1	1	0	1	Command Codes
	W	0	0	0	0	0	HDS	DS1	DS0	
	W	N								Bytes/Sector
	W	SC								Sectors/Cylinder
	W	GPL								Gap 3
	W	D								Filler Byte
Execution										FDC formats an entire cylinder
Result	R	ST 0								Status information after Command execution
	R	ST 1								
	R	ST 2								
	R	C								In this case, the ID information has no meaning
	R	H								
	R	R								
	R	N								
SCAN EQUAL										
Command	W	MT	MFM	SK	1	0	0	0	1	Command Codes
	W	0	0	0	0	0	HDS	DS1	DS0	
	W	C								Sector ID information prior to Command execution
	W	H								
	W	R								
	W	N								
	W	EOT								
	W	GPL								
	W	STP								
Execution										Data compared between the FDD and main-system
Result	R	ST 0								Status information after Command execution
	R	ST 1								
	R	ST 2								
	R	C								Sector ID information after Command execution
	R	H								
	R	R								
	R	N								

PHASE	R/W	DATA BUS D_7	D_6	D_5	D_4	D_3	D_2	D_1	D_0	REMARKS
SCAN LOW OR EQUAL										
Command	W	MT	MFM	SK	1	1	0	0	1	Command Codes
	W	0	0	0	0	0	HDS	DS1	DS0	
	W	C								Sector ID information prior Command execution
	W	H								
	W	R								
	W	N								
	W	EOT								
	W	GPL								
	W	STP								
Execution										Data compared between the FDD and main-system
Result	R	ST 0								Status information after Command execution
	R	ST 1								
	R	ST 2								
	R	C								Sector ID information after Command execution
	R	H								
	R	R								
	R	N								
SCAN HIGH OR EQUAL										
Command	W	MT	MFM	SK	1	1	1	0	1	Command Codes
	W	0	0	0	0	0	HDS	DS1	DS0	
	W	C								Sector ID information prior Command execution
	W	H								
	W	R								
	W	N								
	W	EOT								
	W	GPL								
	W	STP								
Execution										Data compared between the FDD and main-system
Result	R	ST 0								Status information after Command execution
	R	ST 1								
	R	ST 2								
	R	C								Sector ID information after Command execution
	R	H								
	R	R								
	R	N								
RECALIBRATE										
Command	W	0	0	0	0	0	1	1	1	Command Codes
	W	0	0	0	0	0	0	DS1	DS0	
Execution										Head retracted to Track 0
SENSE INTERRUPT STATUS										
Command	W	0	0	0	0	1	0	0	0	Command Codes
Result	R	ST 0								Status information at the end of each seek operation about the FDC
	R	PCN								
SPECIFY										
Command	W	0	0	0	0	0	0	1	1	Command Codes
	W	SRT						HUT		
	W	HLT						ND		
SENSE DRIVE STATUS										
Command	W	0	0	0	0	0	1	0	0	Command Codes
	W	0	0	0	0	0	HDS	DS1	DS0	
Result	R	ST 3								Status information about FDD
SEEK										
Command	W	0	0	0	0	1	1	1	1	Command Codes
	W	0	0	0	0	0	HDS	DS1	DS0	
	W	NCN								
Execution										Head is positioned over proper Cylinder on Diskette
INVALID										
Command	W	Invalid Codes								Invalid Command Codes (NoOp — FDC goes into Standby State)
Result	R	ST 0								ST 0 = 80 (16)

Table 3. Command Mnemonics

SYMBOL	NAME	DESCRIPTION
A_0	Address Line 0	A_0 controls selection of Main Status Register (A_0 = 0) or Data Register (A_0 = 1).
C	Cylinder Number	C stands for the current selected Cylinder track number 0 through 76 of the medium.
D	Data	D stands for the data pattern which is going to be written into a Sector.
D_7-D_0	Data Bus	8-bit Data Bus where D_7 is the most significant bit, and D_0 is the least significant bit.
DS0, DS1	Drive Select	DS stands for a selected drive number 0 or 1.
DTL	Data Length	When N is defined as 00, DTL stands for the data length which users are going to read out or write into the Sector.
EOT	End of Track	EOT stands for the final Sector number of a Cylinder.
GPL	Gap Length	GPL stands for the length of Gap 3 (spacing between Sectors excluding VCO Sync Field).
H	Head Address	H stands for head number 0 or 1, as specified in ID field.
HDS	Head Select	HDS stands for a selected head number 0 or 1 (H = HDS in all command words).
HLT	Head Load Time	HLT stands for the head load time in the FDD (2 to 254 ms in 2 ms increments).
HUT	Head Unload Time	HUT stands for the head unload time after a read or write operation has occurred (16 to 240 ms in 16 ms increments).
MFM	FM or MFM Mode	If MF is low, FM mode is selected and if it is high, MFM mode is selected.
MT	Multi-Track	If MT is high, a multi-track operation is to be performed (a cylinder under both HD0 and HD1 will be read or written).
N	Number	N stands for the number of data bytes written in a Sector.
NCN	New Cylinder Number	NCN stands for a new Cylinder number, which is going to be reached as a result of the Seek operation. Desired position of Head.
ND	Non-DMA Mode	ND stands for operation in the Non-DMA Mode.
PCN	Present Cylinder Number	PCN stands for the Cylinder number at the completion of SENSE INTERRUPT STATUS Command. Position of Head at present time.
R	Record	R stands for the Sector number, which will be read or written.
R/W	Read/Write	R/W stands for either Read (R) or Write (W) signal.
SC	Sector	SC indicates the number of Sectors per Cylinder.
SK	Skip	SK stands for Skip Deleted Data Address Mark.
SRT	Step Rate Time	SRT stands for the Stepping Rate for the FDD (1 to 16 ms in 1 ms increments). The same Stepping Rate applies to all drives (F=1 ms, E=2 ms, etc.).
ST 0 ST 1 ST 2 ST 3	Status 0 Status 1 Status 2 Status 3	ST 0-3 stand for one of four registers which store the status information after a command has been executed. This information is available during the result phase after command execution. These registers should not be confused with the main status register (selected by A_0 = 0). ST 0-3 may be read only after a command has been executed and contain information relevant to that particular command.
STP		During a Scan operation, if STP = 1, the data in contiguous sectors is compared byte by byte with data sent from the processor (or DMA), and if STP = 2, then alternate sectors are read and compared.

COMMAND DESCRIPTIONS

During the Command Phase, the Main Status Register must be polled by the CPU before each byte is written into the Data Register. The DIO (DB6) and RQM (DB7) bits in the Main Status Register must be in the "0" and "1" states respectively, before each byte of the command may be written into the 8272. The beginning of the execution phase for any of these commands will cause DIO and RQM to switch to "1" and "0" states respectively.

READ DATA

A set of nine (9) byte words are required to place the FDC into the Read Data Mode. After the Read Data command has been issued the FDC loads the head (if it is in the unloaded state), waits the specified head settling time (defined in the Specify Command), and begins reading ID Address Marks and ID fields. When the current sector number ("R") stored in the ID Register (IDR) compares with the sector number read off the diskette, then the FDC outputs data (from the data field) byte-by-byte to the main system via the data bus.

After completion of the read operation from the current sector, the Sector Number is incremented by one, and the data from the next sector is read and output on the data bus. This continuous read function is called a "Multi-Sector Read Operation." The Read Data Command may be terminated by the receipt of a Terminal Count signal. Upon receipt of this signal, the FDC stops outputting data to the processor, but will continue to read data from the current sector, check CRC (Cyclic Redundancy Count) bytes, and then at the end of the sector terminate the Read Data Command.

The amount of data which can be handled with a single command to the FDC depends upon MT (multi-track), MFM (MFM/FM), and N (Number of Bytes/Sector). Table 4 below shows the Transfer Capacity.

Table 4. Transfer Capacity

Multi-Track MT	MFM/FM MFM	Bytes/Sector N	Maximum Transfer Capacity (Bytes/Sector) (Number of Sectors)	Final Sector Read from Diskette
0	0	00	(128) (26) = 3,328	26 at Side 0
0	1	01	(256) (26) = 6,656	or 26 at Side 1
1	0	00	(128) (52) = 6,656	26 at Side 1
1	1	01	(256) (52) = 13,312	
0	0	01	(256) (15) = 3,840	15 at Side 0
0	1	02	(512) (15) = 7,680	or 15 at Side 1
1	0	01	(256) (30) = 7,680	15 at Side 1
1	1	02	(512) (30) = 15,360	
0	0	02	(512) (8) = 4,096	8 at Side 0
0	1	03	(1024) (8) = 8,192	or 8 at Side 1
1	0	02	(512) (16) = 8,192	8 at Side 1
1	1	03	(1024) (16) = 16,384	

The "multi-track" function (MT) allows the FDC to read data from both sides of the diskette. For a particular cylinder, data will be transferred starting at Sector 1, Side 0 and completing at Sector L, Side 1 (Sector L = last sector on the side). Note, this function pertains to only one cylinder (the same track) on each side of the diskette.

When N = 0, then DTL defines the data length which the FDC must treat as a sector. If DTL is smaller than the actual data length in a Sector, the data beyond DTL in the Sector, is not sent to the Data Bus. The FDC reads (internally) the complete Sector performing the CRC check, and depending upon the manner of command termination, may perform a Multi-Sector Read Operation. When N is non-zero, then DTL has no meaning and should be set to 0FFH.

At the completion of the Read Data Command, the head is not unloaded until after Head Unload Time Interval (specified in the Specify Command) has elapsed. If the processor issues another command before the head unloads then the head settling time may be saved between subsequent reads. This time out is particularly valuable when a diskette is copied from one drive to another.

If the FDC detects the Index Hole twice without finding the right sector, (indicated in "R"), then the FDC sets the ND (No Data) flag in Status Register 1 to a 1 (high), and terminates the Read Data Command. (Status Register 0 also has bits 7 and 6 set to 0 and 1 respectively.)

After reading the ID and Data Fields in each sector, the FDC checks the CRC bytes. If a read error is detected (incorrect CRC in ID field), the FDC sets the DE (Data Error) flag in Status Register 1 to a 1 (high), and if a CRC error occurs in the Data Field the FDC also sets the DD (Data Error in Data Field) flag in Status Register 2 to a 1 (high), and terminates the Read Data Command. (Status Register 0 also has bits 7 and 6 set to 0 and 1 respectively.)

If the FDC reads a Deleted Data Address Mark off the diskette, and the SK bit (bit D5 in the first Command Word) is not set (SK = 0), then the FDC sets the CM (Control Mark) flag in Status Register 2 to a 1 (high), and terminates the Read Data Command, after reading all the data in the Sector. If SK = 1, the FDC skips the sector with the Deleted Data Address Mark and reads the next sector.

During disk data transfers between the FDC and the processor, via the data bus, the FDC must be serviced by the processor every 27 μs in the FM Mode, and every 13 μs in the MFM Mode, or the FDC sets the OR (Over Run) flag in Status Register 1 to a 1 (high), and terminates the Read Data Command.

If the processor terminates a read (or write) operation in the FDC, then the ID Information in the Result Phase is dependent upon the state of the MT bit and EOT byte. Table 5 shows the values for C, H, R, and N, when the processor terminates the Command.

Table 5. ID Information When Processor Terminates Command

MT	EOT	Final Sector Transferred to Processor	ID Information at Result Phase			
			C	H	R	N
0	1A	Sector 1 to 25 at Side 0	NC	NC	R+1	NC
	0F	Sector 1 to 14 at Side 0				
	08	Sector 1 to 7 at Side 0				
	1A	Sector 26 at Side 0	C+1	NC	R=01	NC
	0F	Sector 15 at Side 0				
	08	Sector 8 at Side 0				
	1A	Sector 1 to 25 at Side 1	NC	NC	R+1	NC
	0F	Sector 1 to 14 at Side 1				
	08	Sector 1 to 7 at Side 1				
	1A	Sector 26 at Side 1	C+1	NC	R=01	NC
	0F	Sector 15 at Side 1				
	08	Sector 8 at Side 1				
1	1A	Sector 1 to 25 at Side 0	NC	NC	R+1	NC
	0F	Sector 1 to 14 at Side 0				
	08	Sector 1 to 7 at Side 0				
	1A	Sector 26 at Side 0	NC	LSB	R=01	NC
	0F	Sector 15 at Side 0				
	08	Sector 8 at Side 0				
	1A	Sector 1 to 25 at Side 1	NC	NC	R+1	NC
	0F	Sector 1 to 14 at Side 1				
	08	Sector 1 to 7 at Side 1				
	1A	Sector 26 at Side 1	C+1	LSB	R=01	NC
	0F	Sector 15 at Side 1				
	08	Sector 8 at Side 1				

Notes: 1. NC (No Change): The same value as the one at the beginning of command execution.
2. LSB (Least Significant Bit): The least significant bit of H is complemented.

WRITE DATA

A set of nine (9) bytes are required to set the FDC into the Write Data mode. After the Write Data command has been issued the FDC loads the head (if it is in the unloaded state), waits the specified head settling time (defined in the Specify Command), and begins reading ID Fields. When the current sector number ("R"), stored in the ID Register (IDR) compares with the sector number read off the diskette, then the FDC takes data from the processor byte-by-byte via the data bus, and outputs it to the FDD.

After writing data into the current sector, the Sector Number stored in "R" is incremented by one, and the next data field is written into. The FDC continues this "Multi-Sector Write Operation" until the issuance of a Terminal Count signal. If a Terminal Count signal is sent to the FDC it continues writing into the current sector to complete the data field. If the Terminal Count signal is received while a data field is being written then the remainder of the data field is filled with 00 (zeros).

The FDC reads the ID field of each sector and checks the CRC bytes. If the FDC detects a read error (incorrect CRC) in one of the ID Fields, it sets the DE (Data Error) flag of Status Register 1 to a 1 (high), and terminates the Write Data Command. (Status Register 0 also has bits 7 and 6 set to 0 and 1 respectively.)

The Write Command operates in much the same manner as the Read Command. The following items are the same; refer to the Read Data Command for details:

- Transfer Capacity
- EN (End of Cylinder) Flag
- ND (No Data) Flag

- Head Unload Time Interval
- ID Information when the processor terminates command (see Table 2)
- Definition of DTL when N = 0 and when N ≠ 0

In the Write Data mode, data transfers between the processor and FDC must occur every 31 μs in the FM mode, and every 15 μs in the MFM mode. If the time interval between data transfers is longer than this then the FDC sets the OR (Over Run) flag in Status Register 1 to a 1 (high), and terminates the Write Data Command.

WRITE DELETED DATA

This command is the same as the Write Data Command except a Deleted Data Address Mark is written at the beginning of the Data Field instead of the normal Data Address Mark.

READ DELETED DATA

This command is the same as the Read Data Command except that when the FDC detects a Data Address Mark at the beginning of a Data Field (and SK = 0 (low)), it will read all the data in the sector and set the CM flag in Status Register 2 to a 1 (high), and then terminate the command. If SK = 1, then the FDC skips the sector with the Data Address Mark and reads the next sector.

READ A TRACK

This command is similar to READ DATA Command except that the entire data field is read continuously from each of the sectors of a track. Immediately after encountering the INDEX HOLE, the FDC starts reading all data fields on the track as continuous blocks of data. If the FDC finds an error in the ID or DATA CRC check bytes, it continues to read data from the track. The FDC compares the ID information read from each sector with the value stored in the IDR, and sets the ND flag of Status Register 1 to a 1 (high) if there is no comparison. Multi-track or skip operations are not allowed with this command.

This command terminates when EOT number of sectors have been read. If the FDC does not find an ID Address Mark on the diskette after it encounters the INDEX HOLE for the second time, then it sets the MA (missing address mark) flag in Status Register 1 to a 1 (high), and terminates the command. (Status Register 0 has bits 7 and 6 set to 0 and 1 respectively.)

READ ID

The READ ID Command is used to give the present position of the recording head. The FDC stores the values from the first ID Field it is able to read. If no proper ID Address Mark is found on the diskette, before the INDEX HOLE is encountered for the second time then the MA (Missing Address Mark) flag in Status Register 1 is set to a 1 (high), and if no data is found then the ND (No Data) flag is also set in Status Register 1 to a 1 (high) and the command is terminated.

FORMAT A TRACK

The Format Command allows an entire track to be formatted. After the INDEX HOLE is detected, Data is written on the Diskette: Gaps, Address Marks, ID Fields and Data Fields, all per the IBM System 34 (Double Density) or System 3740 (Single Density) Format are recorded. The particular format which will be written is controlled by the values programmed into N (number of bytes/sector), SC (sectors/cylinder), GPL (Gap Length), and D (Data Pattern) which are supplied by the processor during the Command Phase. The Data Field is filled with the Byte of data stored in D. The ID Field for each sector is supplied by the processor; that is, four data requests per sector are made by the FDC for C (Cylinder Number), H (Head Number), R (Sector Number) and N (Number of Bytes/Sector). This allows the diskette to be formatted with nonsequential sector numbers, if desired.

After formatting each sector, the processor must send new values for C, H, R, and N to the 8272 for each sector on the track. The contents of the R register is incremented by one after each sector is formatted, thus, the R register contains a value of R + 1 when it is read during the Result Phase. This incrementing and formatting continues for the whole track until the FDC encounters the INDEX HOLE for the second time, whereupon it terminates the command.

If a FAULT signal is received from the FDD at the end of a write operation, then the FDC sets the EC flag of Status Register 0 to a 1 (high), and terminates the command after setting bits 7 and 6 of Status Register 0 to 0 and 1 respectively. Also the loss of a READY signal at the beginning of a command execution phase causes command termination.

Table 6 shows the relationship between N, SC, and GPL for various sector sizes:

Table 6. Sector Size Relationships

FORMAT	SECTOR SIZE	N	SC	GPL[1]	GPL[2]	REMARKS
FM Mode	128 bytes/Sector	00	$1A_{(16)}$	$07_{(16)}$	$1B_{(16)}$	IBM Diskette 1
	256	01	$0F_{(16)}$	$0E_{(16)}$	$2A_{(16)}$	IBM Diskette 2
	512	02	08	$1B_{(16)}$	$3A_{(16)}$	
FM Mode	1024 bytes/Sector	03	04	—	—	
	2048	04	02	—	—	
	4096	05	01	—	—	
MFM Mode	256	01	$1A_{(16)}$	$0E_{(16)}$	$36_{(16)}$	IBM Diskette 2D
	512	02	$0F_{(16)}$	$1B_{(16)}$	$54_{(16)}$	
	1024	03	08	$35_{(16)}$	$74_{(16)}$	IBM Diskette 2D
	2048	04	04	—	—	
	4096	05	02	—	—	
	8192	06	01	—	—	

Note: 1. Suggested values of GPL in Read or Write Commands to avoid splice point between data field and ID field of contiguous sections.

2. Suggested values of GPL in format command.

SCAN COMMANDS

The SCAN Commands allow data which is being read from the diskette to be compared against data which is being supplied from the main system (Processor in NON-DMA mode, and DMA Controller in DMA mode). The FDC compares the data on a byte-by-byte basis, and looks for a sector of data which meets the conditions of $D_{FDD} = D_{Processor}$, $D_{FDD} \leq D_{Processor}$, or $D_{FDD} \geq D_{Processor}$. Ones complement arithmetic is used for comparison (FF = largest number, 00 = smallest number). After a whole sector of data is compared, if the conditions are not met, the sector number is incremented (R + STP → R), and the scan operation is continued. The scan operation continues until one of the following conditions occur; the conditions for scan are met (equal, low, or high), the last sector on the track is reached (EOT), or the terminal count signal is received.

If the conditions for scan are met then the FDC sets the SH (Scan Hit) flag of Status Register 2 to a 1 (high), and terminates the Scan Command. If the conditions for scan are not met between the starting sector (as specified by R) and the last sector on the cylinder (EOT), then the FDC sets the SN (Scan Not Satisfied) flag of Status Register 2 to a 1 (high), and terminates the Scan Command. The receipt of a TERMINAL COUNT signal from the Processor or DMA Controller during the scan operation will cause the FDC to complete the comparison of the particular byte which is in process, and then to terminate the command. Table 7 shows the status of bits SH and SN under various conditions of SCAN.

Table 7. Scan Status Codes

COMMAND	STATUS REGISTER 2		COMMENTS
	BIT 2 = SN	BIT 3 = SH	
Scan Equal	0	1	$D_{FDD} = D_{Processor}$
	1	0	$D_{FDD} \neq D_{Processor}$
Scan Low or Equal	0	1	$D_{FDD} = D_{Processor}$
	0	0	$D_{FDD} < D_{Processor}$
	1	0	$D_{FDD} \neq D_{Processor}$
Scan High or Equal	0	1	$D_{FDD} = D_{Processor}$
	0	0	$D_{FDD} > D_{Processor}$
	1	0	$D_{FDD} \neq D_{Processor}$

If the FDC encounters a Deleted Data Address Mark on one of the sectors (and SK = 0), then it regards the sector as the last sector on the cylinder, sets CM (Control Mark) flag of Status Register 2 to a 1 (high) and terminates the command. If SK = 1, the FDC skips the sector with the Deleted Address Mark, and reads the next sector. In the second case (SK = 1), the FDC sets the CM (Control Mark) flag of Status Register 2 to a 1 (high) in order to show that a Deleted Sector had been encountered.

When either the STP (contiguous sectors STP = 01, or alternate sectors STP = 02 sectors are read) or the MT (Multi-Track) are programmed, it is necessary to remember that the last sector on the track must be read. For example, if STP = 02, MT = 0, the sectors are numbered sequentially 1 through 26, and we start the Scan Command at sector 21; the following will happen. Sectors 21, 23, and 25 will be read, then the next sector (26) will be skipped and the Index Hole will be encountered before the EOT value of 26 can be read. This will result in an abnormal termination of the command. If the EOT had been set at 25 or the scanning started at sector 20, then the Scan Command would be completed in a normal manner.

During the Scan Command data is supplied by either the processor or DMA Controller for comparison against the data read from the diskette. In order to avoid having the OR (Over Run) flag set in Status Register 1, it is necessary to have the data available in less than 27 μs (FM Mode) or 13 μs (MFM Mode). If an Overrun occurs the FDC terminates the command.

SEEK

The read/write head within the FDD is moved from cylinder to cylinder under control of the Seek Command. The FDC compares the PCN (Present Cylinder Number) which is the current head position with the NCN (New Cylinder Number), and performs the following operation if there is a difference:

PCN < NCN: Direction signal to FDD set to a 1 (high), and Step Pulses are issued. (Step In.)

PCN > NCN: Direction signal to FDD set to a 0 (low), and Step Pulses are issued. (Step Out.)

The rate at which Step Pulses are issued is controlled by SRT (Stepping Rate Time) in the SPECIFY Command. After each Step Pulse is issued NCN is compared against PCN, and when NCN = PCN, then the SE (Seek End) flag is set in Status Register 0 to a 1 (high), and the command is terminated.

During the Command Phase of the Seek operation the FDC is in the FDC BUSY state, but during the Execution Phase it is in the NON BUSY state. While the FDC is in the NON BUSY state, another Seek Command may be issued, and in this manner parallel seek operations may be done on up to 4 Drives at once.

If an FDD is in a NOT READY state at the beginning of the command execution phase or during the seek operation, then the NR (NOT READY) flag is set in Status Register 0 to a 1 (high), and the command is terminated.

RECALIBRATE

This command causes the read/write head within the FDD to retract to the Track 0 position. The FDC clears the contents of the PCN counter, and checks the status of the Track 0 signal from the FDD. As long as the Track 0 signal is low, the Direction signal remains 1 (high) and Step Pulses are issued. When the Track 0 signal goes high, the SE (SEEK END) flag in Status Register 0 is set to a 1 (high) and the command is terminated. If the Track 0 signal is still low after 77 Step Pulses have been issued, the FDC sets the SE (SEEK END) and EC (EQUIPMENT CHECK) flags of Status Register 0 to both 1s (highs), and terminates the command.

The ability to overlap RECALIBRATE Commands to multiple FDDs, and the loss of the READY signal, as described in the SEEK Command, also applies to the RECALIBRATE Command.

SENSE INTERRUPT STATUS

An Interrupt signal is generated by the FDC for one of the following reasons:

1. Upon entering the Result Phase of:
   a. Read Data Command
   b. Read a Track Command
   c. Read ID Command
   d. Read Deleted Data Command
   e. Write Data Command
   f. Format a Cylinder Command
   g. Write Deleted Data Command
   h. Scan Commands
2. Ready Line of FDD changes state
3. End of Seek or Recalibrate Command
4. During Execution Phase in the NON-DMA Mode

Interrupts caused by reasons 1 and 4 above occur during normal command operations and are easily discernible by the processor. However, interrupts caused by reasons 2 and 3 above may be uniquely identified with the aid of the Sense Interrupt Status Command. This command when issued resets the interrupt signal and via bits 5, 6, and 7 of Status Register 0 identifies the cause of the interrupt.

Table 8. Seek, Interrupt Codes

SEEK END BIT 5	INTERRUPT CODE		CAUSE
	BIT 6	BIT 7	
0	1	1	Ready Line changed state, either polarity
1	0	0	Normal Termination of Seek or Recalibrate Command
1	1	0	Abnormal Termination of Seek or Recalibrate Command

Neither the Seek or Recalibrate Command have a Result Phase. Therefore, it is mandatory to use the Sense Interrupt Status Command after these commands to effectively terminate them and to provide verification of the head position (PCN).

SPECIFY

The Specify Command sets the initial values for each of the three internal timers. The HUT (Head Unload Time) defines the time from the end of the Execution Phase of one of the Read/Write Commands to the head unload state. This timer is programmable from 16 to 240 ms in increments of 16 ms (01 = 16 ms, 02 = 32 ms . . . . OF = 240 ms). The SRT (Step Rate Time) defines the time interval between adjacent step pulses. This timer is programmable from 1 to 16 ms in increments of 1 ms (F = 1 ms, E = 2 ms, D = 3 ms, etc.). The HLT (Head Load Time) defines the time between when the Head Load signal goes high and when the Read/Write operation starts. This timer is programmable from 2 to 254 ms in increments of 2 ms (01 = 2 ms, 02 = 4 ms, 03 = 6 ms . . . . FE = 254 ms).

The time intervals mentioned above are a direct function of the clock (CLK on pin 19). Times indicated above are for an 8 MHz clock, if the clock was reduced to 4 MHz (mini-floppy application) then all time intervals are increased by a factor of 2.

The choice of DMA or NON-DMA operation is made by the ND (NON-DMA) bit. When this bit is high (ND = 1) the NON-DMA mode is selected, and when ND = 0 the DMA mode is selected.

SENSE DRIVE STATUS

This command may be used by the processor whenever it wishes to obtain the status of the FDDs. Status Register 3 contains the Drive Status information.

INVALID

If an invalid command is sent to the FDC (a command not defined above), then the FDC will terminate the command. No interrupt is generated by the 8272 during this condition. Bit 6 and bit 7 (DIO and RQM) in the Main Status Register are both high ("1") indicating to the processor that the 8272 is in the Result Phase and the contents of Status Register 0 (STO) must be read. When the processor reads Status Register 0 it will find a 80H indicating an invalid command was received.

A Sense Interrupt Status Command must be sent after a Seek or Recalibrate interrupt, otherwise the FDC will consider the next command to be an Invalid Command.

In some applications the user may wish to use this command as a No-Op command, to place the FDC in a standby or no operation state.

Table 9. Status Registers

BIT NO.	BIT NAME	BIT SYMBOL	DESCRIPTION
STATUS REGISTER 0			
D_7	Interrupt Code	IC	$D_7 = 0$ and $D_6 = 0$ Normal Termination of Command, (NT). Command was completed and properly executed.
D_6			$D_7 = 0$ and $D_6 = 1$ Abnormal Termination of Command, (AT). Execution of Command was started, but was not successfully completed.
			$D_7 = 1$ and $D_6 = 0$ Invalid Command issue, (IC). Command which was issued was never started.
			$D_7 = 1$ and $D_6 = 1$ Abnormal Termination because during command execution the ready signal from FDD changed state.
D_5	Seek End	SE	When the FDC completes the SEEK Command, this flag is set to 1 (high).
D_4	Equipment Check	EC	If a fault Signal is received from the FDD, or if the Track 0 Signal fails to occur after 77 Step Pulses (Recalibrate Command) then this flag is set.
D_3	Not Ready	NR	When the FDD is in the not-ready state and a read or write command is issued, this flag is set. If a read or write command is issued to Side 1 of a single sided drive, then this flag is set.
D_2	Head Address	HD	This flag is used to indicate the state of the head at Interrupt.
D_1	Unit Select 1	US 1	These flags are used to indicate a Drive Unit Number at Interrupt
D_0	Unit Select 0	US 0	
STATUS REGISTER 1			
D_7	End of Cylinder	EN	When the FDC tries to access a Sector beyond the final Sector of a Cylinder, this flag is set.
D_6			Not used. This bit is always 0 (low).
D_5	Data Error	DE	When the FDC detects a CRC error in either the ID field or the data field, this flag is set.
D_4	Over Run	OR	If the FDC is not serviced by the main-systems during data transfers, within a certain time interval, this flag is set.
D_3			Not used. This bit always 0 (low).
D_2	No Data	ND	During execution of READ DATA, WRITE DELETED DATA or SCAN Command, if the FDC cannot find the Sector specified in the IDR Register, this flag is set.
			During executing the READ ID Command, if the FDC cannot read the ID field without an error, then this flag is set.
			During the execution of the READ A Cylinder Command, if the starting sector cannot be found, then this flag is set.
STATUS REGISTER 1 (CONT.)			
D_1	Not Writable	NW	During execution of WRITE DATA, WRITE DELETED DATA or Format A Cylinder Command, if the FDC detects a write protect signal from the FDD, then this flag is set.
D_0	Missing Address Mark	MA	If the FDC cannot detect the ID Address Mark after encountering the index hole twice, then this flag is set.
			If the FDC cannot detect the Data Address Mark or Deleted Data Address Mark, this flag is set. Also at the same time, the MD (Missing Address Mark in Data Field) of Status Register 2 is set.
STATUS REGISTER 2			
D_7			Not used. This bit is always 0 (low).
D_6	Control Mark	CM	During executing the READ DATA or SCAN Command, if the FDC encounters a Sector which contains a Deleted Data Address Mark, this flag is set.
D_5	Data Error in Data Field	DD	If the FDC detects a CRC error in the data field then this flag is set.
D_4	Wrong Cylinder	WC	This bit is related with the ND bit, and when the contents of C on the medium is different from that stored in the IDR, this flag is set.
D_3	Scan Equal Hit	SH	During execution, the SCAN Command, if the condition of "equal" is satisfied, this flag is set.
D_2	Scan Not Satisfied	SN	During executing the SCAN Command, if the FDC cannot find a Sector on the cylinder which meets the condition, then this flag is set.
D_1	Bad Cylinder	BC	This bit is related with the ND bit, and when the content of C on the medium is different from that stored in the IDR and the content of C is FF, then this flag is set.
D_0	Missing Address Mark in Data Field	MD	When data is read from the medium, if the FDC cannot find a Data Address Mark or Deleted Data Address Mark, then this flag is set.
STATUS REGISTER 3			
D_7	Fault	FT	This bit is used to indicate the status of the Fault signal from the FDD.
D_6	Write Protected	WP	This bit is used to indicate the status of the Write Protected signal from the FDD.
D_5	Ready	RDY	This bit is used to indicate the status of the Ready signal from the FDD.
D_4	Track 0	T0	This bit is used to indicate the status of the Track 0 signal from the FDD.
D_3	Two Side	TS	This bit is used to indicate the status of the Two Side signal from the FDD.
D_2	Head Address	HD	This bit is used to indicate the status of Side Select signal to the FDD.
D_1	Unit Select 1	US 1	This bit is used to indicate the status of the Unit Select 1 signal to the FDD.
D_0	Unit Select 0	US 0	This bit is used to indicate the status of the Unit Select 0 signal to the FDD.

ABSOLUTE MAXIMUM RATINGS*

Operating Temperature ..... 0°C to +70°C
Storage Temperature ..... −40°C to +125°C
All Output Voltages ..... −0.5 to +7 Volts
All Input Voltages ..... −0.5 to +7 Volts
Supply Voltage V_{CC} ..... −0.5 to +7 Volts
Power Dissipation ..... 1 Watt

*T_A = 25°C

NOTICE: Stress above those listed under "Absolute Maximum Ratings" may cause permanent damage to the device. This is a stress rating only and functional operation of the device at these or any other conditions above those indicated in the operational sections of this specification is not implied. Exposure to absolute maximum rating conditions for extended periods may affect device reliability.

D.C. CHARACTERISTICS (T_A = 0°C to +70°C, V_{CC} = +5V ± 5%)

Symbol	Parameter	Limits		Unit	Test Conditions
		Min.	Max.		
V_{IL_1}	Input Low Voltage	−0.5	0.8	V	
V_{IH_1}	Input High Voltage	2.0	V_{CC} + 0.5	V	
V_{IL_2}	(CLK & WR CLK)	−0.5	0.65	V	
V_{IH_2}	(CLK & WR CLK)	2.4	V_{CC} + 0.5	V	
V_{OL}	Output Low Voltage		0.45	V	I_{OL} = 2.0 mA
V_{OH}	Output High Voltage	2.4	V_{CC}	V	I_{OH} = −200 μA
I_{CC}	V_{CC} Supply Current		150	mA	
I_{IL}	Input Load Current (All Input Pins)		10 −10	μA μA	V_{IN} = V_{CC} V_{IN} = 0V
I_{LOH}	High Level Output Leakage Current		10	μA	V_{OUT} = V_{CC}
I_{OFL}	Output Float Leakage Current		±10	μA	0.45V ≤ V_{OUT} ≤ V_{CC}

CAPACITANCE (T_A = 25°C, f_c = 1 MHz, V_{CC} = 0V)

Symbol	Parameter	Limits		Unit	Test Conditions
		Min.	Max.		
$C_{IN(\phi)}$	Clock Input Capacitance		20	pF	All Pins Except Pin Under Test Tied to AC Ground
C_{IN}	Input Capacitance		10	pF	
C_{OUT}	Output Capacitance		20	pF	

A.C. CHARACTERISTICS (T_A = 0°C to 70°C; V_{CC} = +5.0V ± 5%)

Symbol	Parameter	TYP [1]	Min.	Max.	Unit	Test Conditions
t_{CY}	Clock Period		125		ns	
t_{CH}	Clock High Period		40		ns	Note 4
t_{RST}	Reset Width		14		t_{CY}	
Read Cycle						
t_{AR}	Select Setup to $\overline{RD}\downarrow$		0		ns	
t_{RA}	Select Hold from $\overline{RD}\uparrow$		0		ns	
t_{RR}	$\overline{RD}$ Pulse Width		250		ns	
t_{RD}	Data Delay from $\overline{RD}\downarrow$			200	ns	
t_{DF}	Output Float Delay		20	100	ns	
Write Cycle						
t_{AW}	Select Setup to $\overline{WR}\downarrow$		0		ns	
t_{WA}	Select Hold from $\overline{WR}\uparrow$		0		ns	
t_{WW}	$\overline{WR}$ Pulse Width		250		ns	
t_{DW}	Data Setup to $\overline{WR}\uparrow$		150		ns	
t_{WD}	Data Hold from $\overline{WR}\uparrow$		5		ns	
Interrupts						
t_{RI}	INT Delay from $\overline{RD}\uparrow$			500	ns	
t_{WI}	INT Delay from $\overline{WR}\uparrow$			500	ns	
DMA						
t_{RQCY}	DRQ Cycle Period		13		µs	
t_{AKRQ}	$\overline{DACK}\downarrow$ to DRQ↓			200	ns	
t_{RQR}	DRQ↑ to $\overline{RD}\downarrow$		800		ns	8 MHz clock
t_{RQW}	DRQ↑ to $\overline{WR}\downarrow$		250		ns	8 MHz clock
t_{RQRW}	DRQ↑ to $\overline{RD}\uparrow$ or $\overline{WR}\uparrow$			12	µs	8 MHz clock
FDD Interface						
t_{WCY}	WCK Cycle Time	2 or 4			µs	MFM = 0 Note 2
		1 or 2				MFM = 1
t_{WCH}	WCK High Time	250	100	350	ns	
t_{CP}	Pre-Shift Delay from WCK↑		20	100	ns	
t_{CD}	WDA Delay from WCK↑		20	100	ns	
t_{WDD}	Write Data Width		$t_{WCH} - 50$		ns	
t_{WE}	WE↑ to WCK↑ or WE↓ to WCK↓ Delay		20	100	ns	
t_{WWCY}	Window Cycle Time	2			µs	MFM = 0
		1				MFM = 1
t_{WRD}	Window Setup to RDD↑		15		ns	
t_{RDW}	Window Hold from RDD↓		15		ns	
t_{RDD}	RDD Active Time (HIGH)		40		ns	
FDD SEEK/ DIRECTION/ STEP						
t_{US}	$US_{0,1}$ Setup to $\overline{RW}$/SEEK↑		12		µs	8 MHz clock
t_{SD}	$\overline{RW}$/SEEK Setup to LCT/DIR		6.8		µs	
t_{DS}	$\overline{RW}$/SEEK Hold from LCT/DIR		30		µs	
t_{DST}	LCT/DIR Setup to FR/STEP↑		1		µs	
t_{STD}	LCT/DIR Hold from FR/STEP↓		24		µs	
t_{STU}	$DS_{0,1}$ Hold from FR/Step↓		5		µs	
t_{STP}	STEP Active Time (High)	5			µs	
t_{SC}	STEP Cycle Time		33		µs	Note 3
t_{FR}	FAULT RESET Active Time (High)		8	10	µs	
t_{IDX}	INDEX Pulse Width	625			µs	
t_{TC}	Terminal Count Width		1		t_{CY}	

NOTES:

1. Typical values for T_A = 25°C and nominal supply voltage.
2. The former values are used for standard floppy and the latter values are used for mini-floppies.
3. t_{SC} = 33µs min. is for different drive units. In the case of same unit, t_{SC} can be ranged from 1 ms to 16 ms with 8 MHz clock period, and 2 ms to 32 ms with 4 MHz clock, under software control.
4. From 2.0V↑ to +2.0V↓.

A.C. TESTING INPUT, OUTPUT WAVEFORM

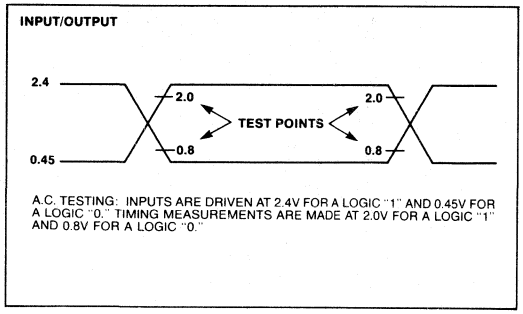

A.C. TESTING: INPUTS ARE DRIVEN AT 2.4V FOR A LOGIC "1" AND 0.45V FOR A LOGIC "0." TIMING MEASUREMENTS ARE MADE AT 2.0V FOR A LOGIC "1" AND 0.8V FOR A LOGIC "0."

A.C. TESTING LOAD CIRCUIT

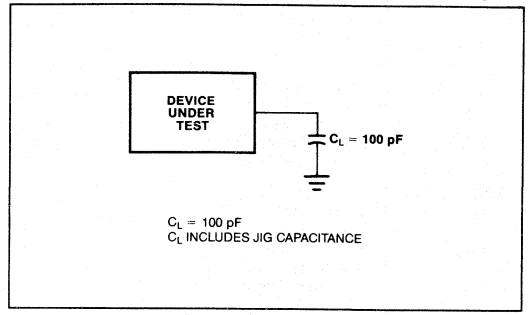

C_L = 100 pF
C_L INCLUDES JIG CAPACITANCE

WAVEFORMS

PROCESSOR READ OPERATION

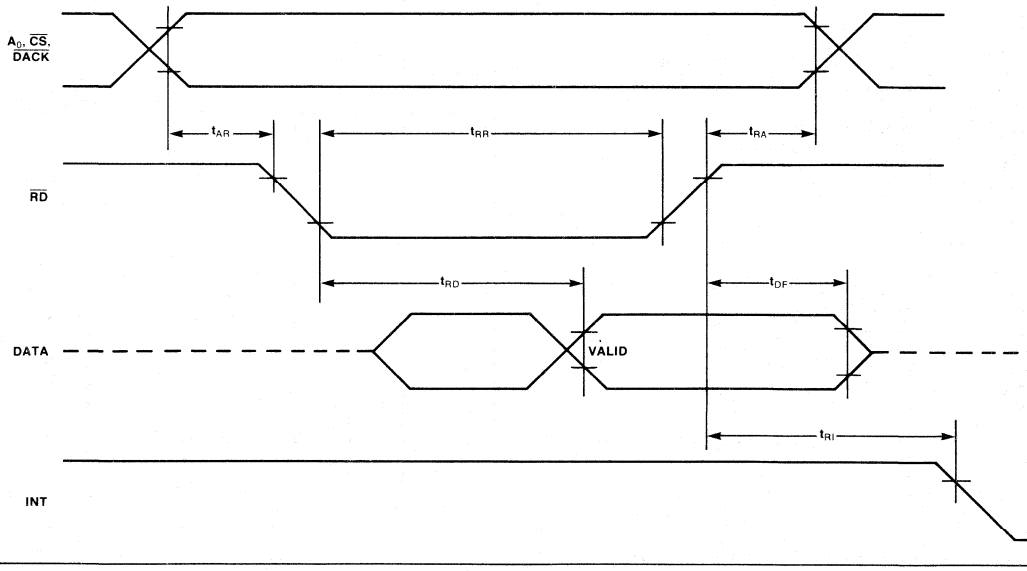

WAVEFORMS (Continued)

PROCESSOR WRITE OPERATION

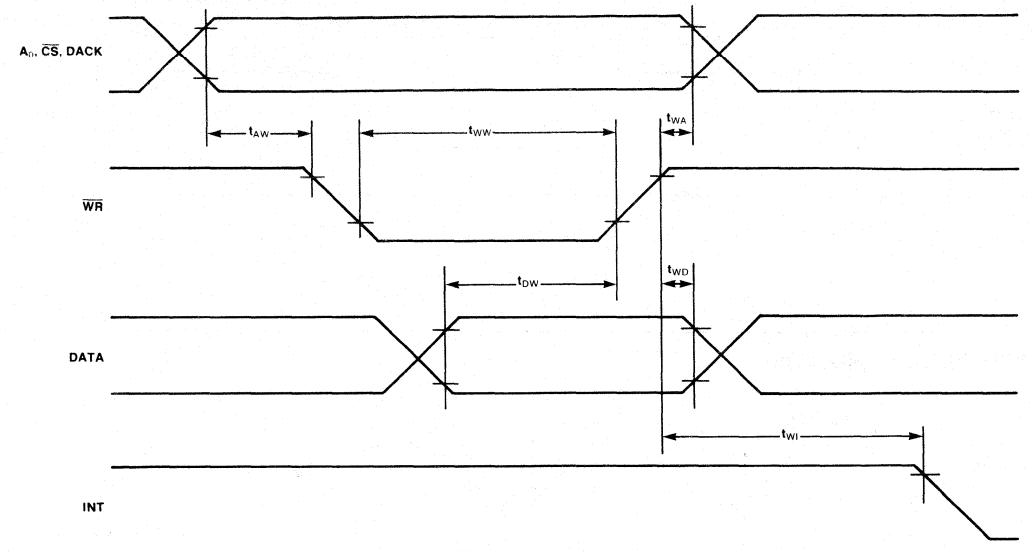

DMA OPERATION

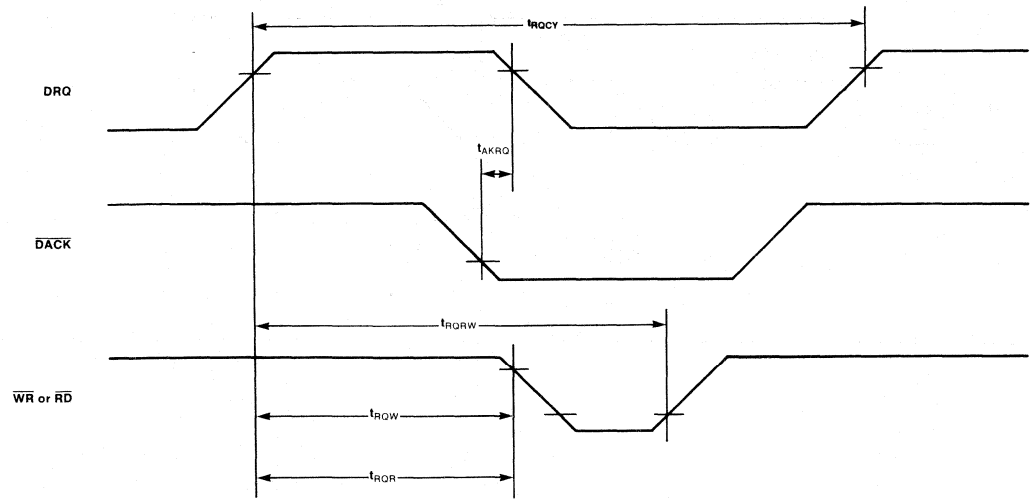

WAVEFORMS (Continued)

CLOCK TIMING

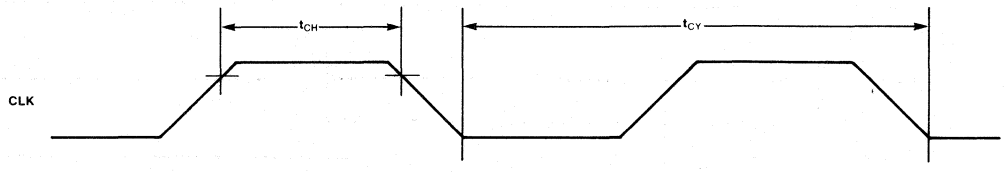

FDD WRITE OPERATION

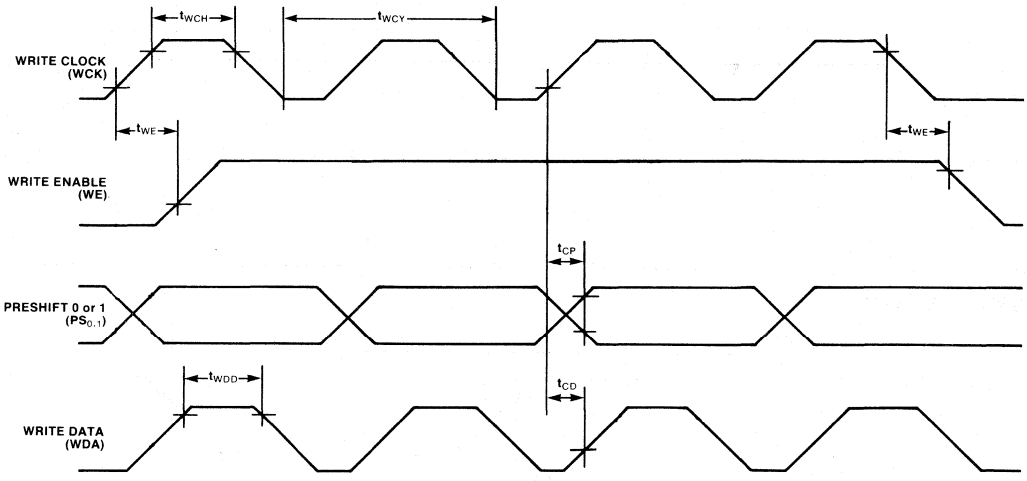

	PRESHIFT 0	PRESHIFT 1
NORMAL	0	0
LATE	0	1
EARLY	1	0
INVALID	1	1

WAVEFORMS (Continued)

SEEK OPERATION

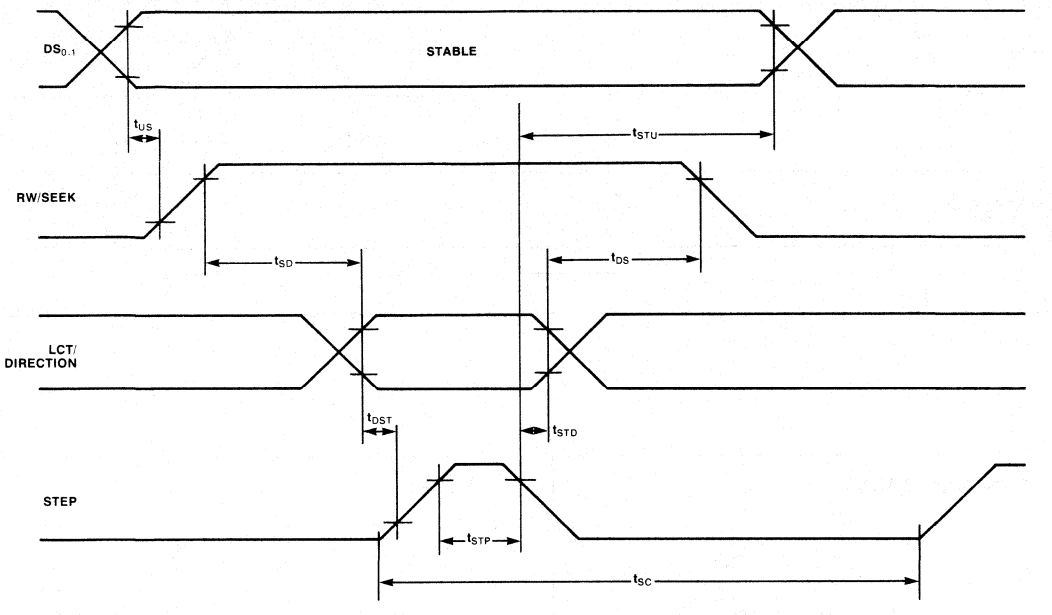

FLT RESET

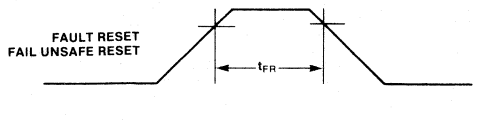

INDEX

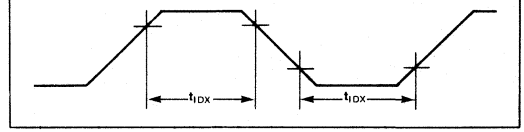

WAVEFORMS (Continued)

FDD READ OPERATION

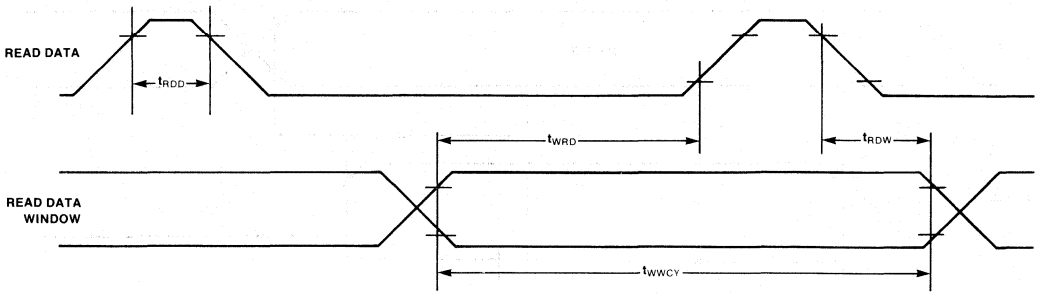

TERMINAL COUNT

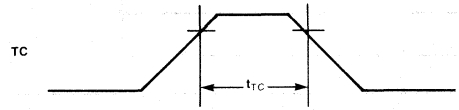

RESET

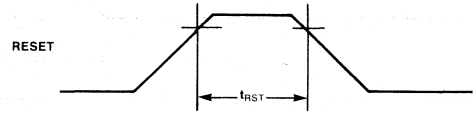

8251A
PROGRAMMABLE COMMUNICATION INTERFACE

- **Synchronous and Asynchronous Operation**
- **Synchronous 5-8 Bit Characters; Internal or External Character Synchronization; Automatic Sync Insertion**
- **Asynchronous 5-8 Bit Characters; Clock Rate—1, 16 or 64 Times Baud Rate; Break Character Generation; 1, 1½, or 2 Stop Bits; False Start Bit Detection; Automatic Break Detect and Handling**
- **Synchronous Baud Rate—DC to 64K Baud**
- **Asynchronous Baud Rate—DC to 19.2K Baud**
- **Full-Duplex, Double-Buffered Transmitter and Receiver**
- **Error Detection—Parity, Overrun and Framing**
- **Compatible with an Extended Range of Intel Microprocessors**
- **28-Pin DIP Package**
- **All Inputs and Outputs are TTL Compatible**
- **Single +5V Supply**
- **Single TTL Clock**

The Intel® 8251A is the enhanced version of the industry standard, Intel 8251 Universal Synchronous/Asynchronous Receiver/Transmitter (USART), designed for data communications with Intel's microprocessor families such as MCS-68, 80, 85, and iAPX-86, 88. The 8251A is used as a peripheral device and is programmed by the CPU to operate using virtually any serial data transmission technique presently in use (including IBM "bi-sync"). The USART accepts data characters from the CPU in parallel format and then converts them into a continuous serial data stream for transmission. Simultaneously, it can receive serial data streams and convert them into parallel data characters for the CPU. The USART will signal the CPU whenever it can accept a new character for transmission or whenever it has received a character for the CPU. The CPU can read the complete status of the USART at any time. These include data transmission errors and control signals such as SYNDET, TxEMPTY. The chip is fabricated using N-channel silicon gate technology.

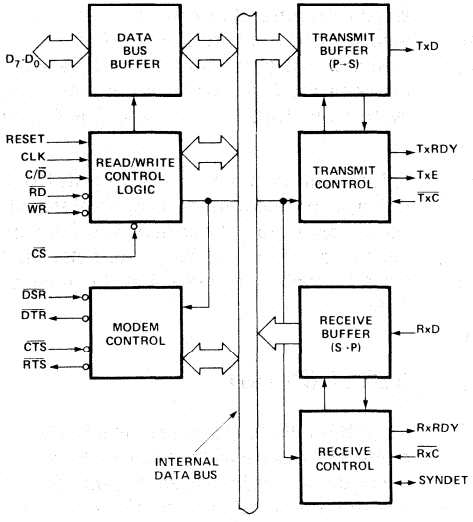

Figure 1. Block Diagram

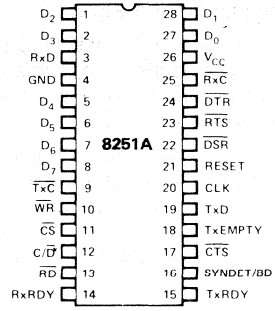

Figure 2. Pin Configuration

©INTEL CORPORATION, 1981

FEATURES AND ENHANCEMENTS

The 8251A is an advanced design of the industry standard USART, the Intel® 8251. The 8251A operates with an extended range of Intel microprocessors and maintains compatibility with the 8251. Familiarization time is minimal because of compatibility and involves only knowing the additional features and enhancements, and reviewing the AC and DC specifications of the 8251A.

The 8251A incorporates all the key features of the 8251 and has the following additional features and enhancements:

- 8251A has double-buffered data paths with separate I/O registers for control, status, Data In, and Data Out, which considerably simplifies control programming and minimizes CPU overhead.
- In asynchronous operations, the Receiver detects and handles "break" automatically, relieving the CPU of this task.
- A refined Rx initialization prevents the Receiver from starting when in "break" state, preventing unwanted interrupts from a disconnected USART.
- At the conclusion of a transmission, TxD line will always return to the marking state unless SBRK is programmed.
- Tx Enable logic enhancement prevents a Tx Disable command from halting transmission until all data previously written has been transmitted. The logic also prevents the transmitter from turning off in the middle of a word.
- When External Sync Detect is programmed, Internal Sync Detect is disabled, and an External Sync Detect status is provided via a flip-flop which clears itself upon a status read.
- Possibility of false sync detect is minimized by ensuring that if double character sync is programmed, the characters be contiguously detected and also by clearing the Rx register to all ones whenever Enter Hunt command is issued in Sync mode.
- As long as the 8251A is not selected, the $\overline{RD}$ and $\overline{WR}$ do not affect the internal operation of the device.
- The 8251A Status can be read at any time but the status update will be inhibited during status read.
- The 8251A is free from extraneous glitches and has enhanced AC and DC characteristics, providing higher speed and better operating margins.
- Synchronous Baud rate from DC to 64K.

FUNCTIONAL DESCRIPTION

General

The 8251A is a Universal Synchronous/Asynchronous Receiver/Transmitter designed for a wide range of Intel microcomputers such as 8048, 8080, 8085, 8086 and 8088. Like other I/O devices in a microcomputer system, its functional configuration is programmed by the system's software for maximum flexibility. The 8251A can support most serial data techniques in use, including IBM "bi-sync."

In a communication environment an interface device must convert parallel format system data into serial format for transmission and convert incoming serial format data into parallel system data for reception. The interface device must also delete or insert bits or characters that are functionally unique to the communication technique. In essence, the interface should appear "transparent" to the CPU, a simple input or output of byte-oriented system data.

Data Bus Buffer

This 3-state, bidirectional, 8-bit buffer is used to interface the 8251A to the system Data Bus. Data is transmitted or received by the buffer upon execution of INput or OUTput instructions of the CPU. Control words, Command words and Status information are also transferred through the Data Bus Buffer. The Command Status, Data-In and Data-Out registers are separate, 8-bit registers communicating with the system bus through the Data Bus Buffer.

This functional block accepts inputs from the system Control bus and generates control signals for overall device operation. It contains the Control Word Register and Command Word Register that store the various control formats for the device functional definition.

RESET (Reset)

A "high" on this input forces the 8251A into an "Idle" mode. The device will remain at "Idle" until a new set of control words is written into the 8251A to program its functional definition. Minimum RESET pulse width is 6 t_{CY} (clock must be running).

A command reset operation also puts the device into the "Idle" state.

AFN-01573C

CLK (Clock)

The CLK input is used to generate internal device timing and is normally connected to the Phase 2 (TTL) output of the Clock Generator. No external inputs or outputs are referenced to CLK but the frequency of CLK must be greater than 30 times the Receiver or Transmitter data bit rates.

$\overline{WR}$ (Write)

A "low" on this input informs the 8251A that the CPU is writing data or control words to the 8251A.

$\overline{RD}$ (Read)

A "low" on this input informs the 8251A that the CPU is reading data or status information from the 8251A.

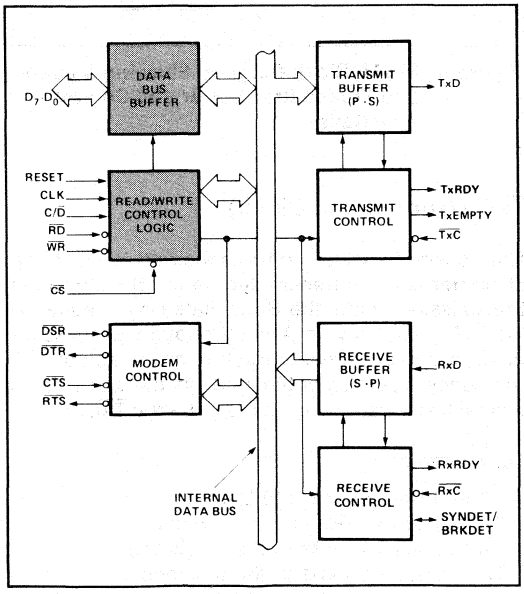

Figure 3. 8251A Block Diagram Showing Data Bus Buffer and Read/Write Logic Functions

C/$\overline{D}$	$\overline{RD}$	$\overline{WR}$	$\overline{CS}$	
0	0	1	0	8251A DATA ⇒ DATA BUS
0	1	0	0	DATA BUS ⇒ 8251A DATA
1	0	1	0	STATUS ⇒ DATA BUS
1	1	0	0	DATA BUS ⇒ CONTROL
X	1	1	0	DATA BUS ⇒ 3-STATE
X	X	X	1	DATA BUS ⇒ 3-STATE

C/$\overline{D}$ (Control/Data)

This input, in conjunction with the $\overline{WR}$ and $\overline{RD}$ inputs, informs the 8251A that the word on the Data Bus is either a data character, control word or status information.

1 = CONTROL/STATUS; 0 = DATA.

$\overline{CS}$ (Chip Select)

A "low" on this input selects the 8251A. No reading or writing will occur unless the device is selected. When $\overline{CS}$ is high, the Data Bus is in the float state and $\overline{RD}$ and $\overline{WR}$ have no effect on the chip.

Modem Control

The 8251A has a set of control inputs and outputs that can be used to simplify the interface to almost any modem. The modem control signals are general purpose in nature and can be used for functions other than modem control, if necessary.

$\overline{DSR}$ (Data Set Ready)

The $\overline{DSR}$ input signal is a general-purpose, 1-bit inverting input port. Its condition can be tested by the CPU using a Status Read operation. The $\overline{DSR}$ input is normally used to test modem conditions such as Data Set Ready.

$\overline{DTR}$ (Data Terminal Ready)

The $\overline{DTR}$ output signal is a general-purpose, 1-bit inverting output port. It can be set "low" by programming the appropriate bit in the Command Instruction word. The $\overline{DTR}$ output signal is normally used for modem control such as Data Terminal Ready.

$\overline{RTS}$ (Request to Send)

The $\overline{RTS}$ output signal is a general-purpose, 1-bit inverting output port. It can be set "low" by programming the appropriate bit in the Command Instruction word. The $\overline{RTS}$ output signal is normally used for modem control such as Request to Send.

$\overline{CTS}$ (Clear to Send)

A "low" on this input enables the 8251A to transmit serial data if the Tx Enable bit in the Command byte is set to a "one." If either a Tx Enable off or $\overline{CTS}$ off condition occurs while the Tx is in operation, the Tx will transmit all the data in the USART, written prior to Tx Disable command before shutting down.

Transmitter Buffer

The Transmitter Buffer accepts parallel data from the Data Bus Buffer, converts it to a serial bit stream, inserts the appropriate characters or bits (based on the communication technique) and outputs a composite serial stream of data on the TxD output pin on the falling edge of $\overline{TxC}$. The transmitter will begin transmission upon being enabled if $\overline{CTS}$ = 0. The TxD line will be held in the marking state immediately upon a master Reset or when Tx Enable or $\overline{CTS}$ is off or the transmitter is empty.

Transmitter Control

The Transmitter Control manages all activities associated with the transmission of serial data. It accepts and issues signals both externally and internally to accomplish this function.

TxRDY (Transmitter Ready)

This output signals the CPU that the transmitter is ready to accept a data character. The TxRDY output pin can be used as an interrupt to the system, since it is masked by TxEnable; or, for Polled operation, the CPU can check TxRDY using a Status Read operation. TxRDY is automatically reset by the leading edge of $\overline{WR}$ when a data character is loaded from the CPU.

Note that when using the Polled operation, the TxRDY status bit is *not* masked by TxEnable, but will only indicate the Empty/Full Status of the Tx Data Input Register.

TxE (Transmitter Empty)

When the 8251A has no characters to send, the TxEMPTY output will go "high." It resets upon receiving a character from the CPU if the transmitter is enabled. TxEMPTY remains low when the transmitter is disabled even if it is actually empty. TxEMPTY can be used to indicate the end of a transmission mode, so that the CPU "knows" when to "turn the line around" in the half-duplex operational mode.

In the Synchronous mode, a "high" on this output indicates that a character has not been loaded and the SYNC character or characters are about to be or are being transmitted automatically as "fillers." TxEMPTY does not go low when the SYNC characters are being shifted out.

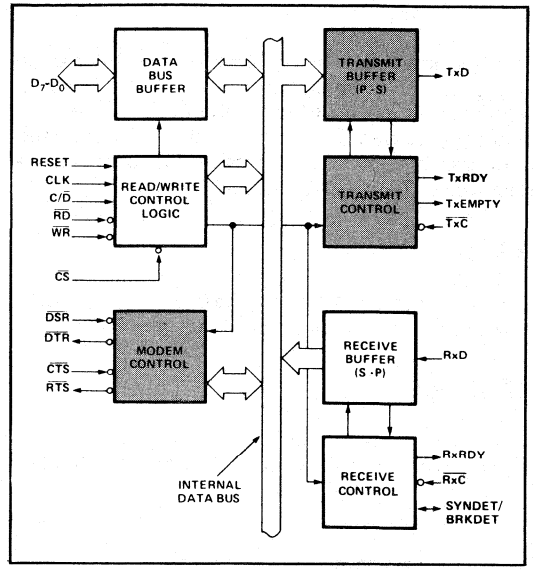

Figure 4. 8251A Block Diagram Showing Modem and Transmitter Buffer and Control Functions

$\overline{TxC}$ (Transmitter Clock)

The Transmitter Clock controls the rate at which the character is to be transmitted. In the Synchronous transmission mode, the Baud Rate (1x) is equal to the $\overline{TxC}$ frequency. In Asynchronous transmission mode, the baud rate is a fraction of the actual $\overline{TxC}$ frequency. A portion of the mode instruction selects this factor; it can be 1, 1/16 or 1/64 the $\overline{TxC}$.

For Example:

If Baud Rate equals 110 Baud,
$\overline{TxC}$ equals 110 Hz in the 1x mode.
$\overline{TxC}$ equals 1.72 kHz in the 16x mode.
$\overline{TxC}$ equals 7.04 kHz in the 64x mode.

The falling edge of $\overline{TxC}$ shifts the serial data out of the 8251A.

Receiver Buffer

The Receiver accepts serial data, converts this serial input to parallel format, checks for bits or characters that are unique to the communication technique and sends an "assembled" character to the CPU. Serial data is input to RxD pin, and is clocked in on the rising edge of $\overline{RxC}$.

Receiver Control

This functional block manages all receiver-related activities which consists of the following features.

The RxD initialization circuit prevents the 8251A from mistaking an unused input line for an active low data line in the "break condition." Before starting to receive serial characters on the RxD line, a valid "1" must first be detected after a chip master Reset. Once this has been determined, a search for a valid low (Start bit) is enabled. This feature is only active in the asynchronous mode, and is only done once for each master Reset.

The False Start bit detection circuit prevents false starts due to a transient noise spike by first detecting the falling edge and then strobing the nominal center of the Start bit (RxD = low).

Parity error detection sets the corresponding status bit.

The Framing Error status bit is set if the Stop bit is absent at the end of the data byte (asynchronous mode).

RxRDY (Receiver Ready)

This output indicates that the 8251A contains a character that is ready to be input to the CPU. RxRDY can be connected to the interrupt structure of the CPU or, for polled operation, the CPU can check the condition of RxRDY using a Status Read operation.

RxEnable, when off, holds RxRDY in the Reset Condition. For Asynchronous mode, to set RxRDY, the Receiver must be enabled to sense a Start Bit and a complete character must be assembled and transferred to the Data Output Register. For Synchronous mode, to set RxRDY, the Receiver must be enabled and a character must finish assembly and be transferred to the Data Output Register.

Failure to read the received character from the Rx Data Output Register prior to the assembly of the next Rx Data character will set overrun condition error and the previous character will be written over and lost. If the Rx Data is being read by the CPU when the internal transfer is occurring, overrun error will be set and the old character will be lost.

$\overline{RxC}$ (Receiver Clock)

The Receiver Clock controls the rate at which the character is to be received. In Synchronous Mode, the Baud Rate (1x) is equal to the actual frequency of $\overline{RxC}$. In Asynchronous Mode, the Baud Rate is a fraction of the actual $\overline{RxC}$ frequency. A portion of the mode instruction selects this factor: 1, 1/16 or 1/64 the $\overline{RxC}$.

For example:

Baud Rate equals 300 Baud, if
$\overline{RxC}$ equals 300 Hz in the 1x mode;
$\overline{RxC}$ equals 4800 Hz in the 16x mode;
$\overline{RxC}$ equals 19.2 kHz in the 64x mode.

Baud Rate equals 2400 Baud, if
$\overline{RxC}$ equals 2400 Hz in the 1x mode;
$\overline{RxC}$ equals 38.4 kHz in the 16x mode;
$\overline{RxC}$ equals 153.6 kHz in the 64x mode.

Data is sampled into the 8251A on the rising edge of $\overline{RxC}$.

NOTE: In most communications systems, the 8251A will be handling both the transmission and reception operations of a single link. Consequently, the Receive and Transmit Baud Rates will be the same. Both $\overline{TxC}$ and $\overline{RxC}$ will require identical frequencies for this operation and can be tied together and connected to a single frequency source (Baud Rate Generator) to simplify the interface.

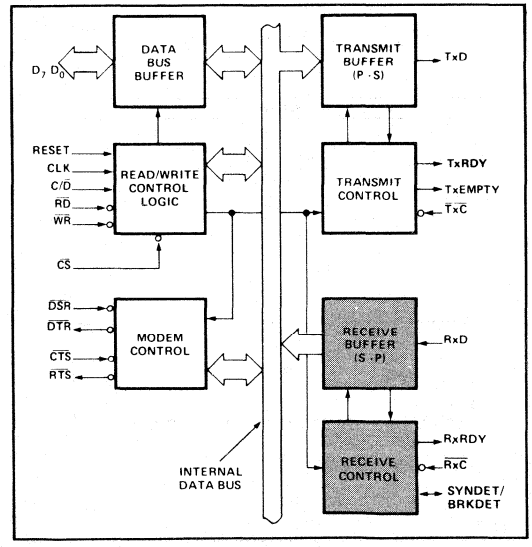

Figure 5. 8251A Block Diagram Showing Receiver Buffer and Control Functions

SYNDET (SYNC Detect/ BRKDET Break Detect)

This pin is used in Synchronous Mode for SYNDET and may be used as either input or output, programmable through the Control Word. It is reset to output mode low upon RESET. When used as an output (internal Sync mode), the SYNDET pin will go "high" to indicate that the 8251A has located the SYNC character in the Receive mode. If the 8251A is programmed to use double Sync characters (bisync), then SYNDET will go "high" in the middle of the last bit of the second Sync character. SYNDET is automatically reset upon a Status Read operation.

When used as an input (external SYNC detect mode), a positive going signal will cause the 8251A to start assembling data characters on the rising edge of the next $\overline{RxC}$. Once in SYNC, the "high" input signal can be removed. When External SYNC Detect is programmed, Internal SYNC Detect is disabled.

BREAK (Async Mode Only)

This output will go high whenever the receiver remains low through two consecutive stop bit sequences (including the start bits, data bits, and parity bits). Break Detect may also be read as a Status bit. It is reset only upon a master chip Reset or Rx Data returning to a "one" state.

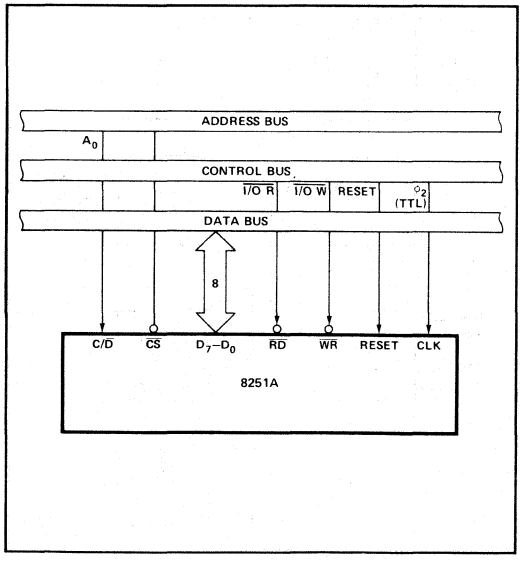

Figure 6. 8251A Interface to 8080 Standard System Bus

DETAILED OPERATION DESCRIPTION

General

The complete functional definition of the 8251A is programmed by the system's software. A set of control words must be sent out by the CPU to initialize the 8251A to support the desired communications format. These control words will program the: BAUD RATE, CHARACTER LENGTH, NUMBER OF STOP BITS, SYNCHRONOUS or ASYNCHRONOUS OPERATION, EVEN/ODD/OFF PARITY, etc. In the Synchronous Mode, options are also provided to select either internal or external character synchronization.

Once programmed, the 8251A is ready to perform its communication functions. The TxRDY output is raised "high" to signal the CPU that the 8251A is ready to receive a data character from the CPU. This output (TxRDY) is reset automatically when the CPU writes a character into the 8251A. On the other hand, the 8251A receives serial data from the MODEM or I/O device. Upon receiving an entire character, the RxRDY output is raised "high" to signal the CPU that the 8251A has a complete character ready for the CPU to fetch. RxRDY is reset automatically upon the CPU data read operation.

The 8251A cannot begin transmission until the Tx Enable (Transmitter Enable) bit is set in the Command Instruction and it has received a Clear To Send ($\overline{CTS}$) input. The TxD output will be held in the marking state upon Reset.

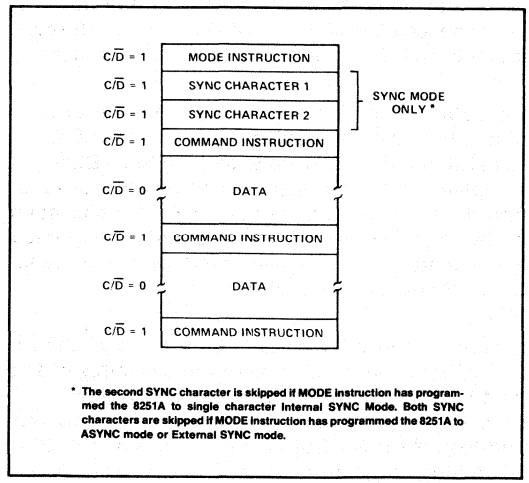

Figure 7. Typical Data Block

Programming the 8251A

Prior to starting data transmission or reception, the 8251A must be loaded with a set of control words generated by the CPU. These control signals define the complete functional definition of the 8251A and must immediately follow a Reset operation (internal or external).

The control words are split into two formats:

1. Mode Instruction
2. Command Instruction

Mode Instruction

This instruction defines the general operational characteristics of the 8251A. It must follow a Reset operation (internal or external). Once the Mode Instruction has been written into the 8251A by the CPU, SYNC characters or Command Instructions may be written.

Command Instruction

This instruction defines a word that is used to control the actual operation of the 8251A.

Both the Mode and Command Instructions must conform to a specified sequence for proper device operation (see Figure 7). The Mode Instruction must be written immediately following a Reset operation, prior to using the 8251A for data communication.

All control words written into the 8251A after the Mode Instruction will load the Command Instruction. Command Instructions can be written into the 8251A at any time in the data block during the operation of the 8251A. To return to the Mode Instruction format, the master Reset bit in the Command Instruction word can be set to initiate an internal Reset operation which automatically places the 8251A back into the Mode Instruction format. Command Instructions must follow the Mode Instructions or Sync characters.

Mode Instruction Definition

The 8251A can be used for either Asynchronous or Synchronous data communication. To understand how the Mode Instruction defines the functional operation of the 8251A, the designer can best view the device as two separate components, one Asynchronous and the other Synchronous, sharing the same package. The format definition can be changed only after a master chip Reset. For explanation purposes the two formats will be isolated.

NOTE: When parity is enabled it is not considered as one of the data bits for the purpose of programming the word length. The actual parity bit received on the Rx Data line cannot be read on the Data Bus. In the case of a programmed character length of less than 8 bits, the least significant Data Bus bits will hold the data; unused bits are "don't care" when writing data to the 8251A, and will be "zeros" when reading the data from the 8251A.

Asynchronous Mode (Transmission)

Whenever a data character is sent by the CPU the 8251A automatically adds a Start bit (low level) followed by the data bits (least significant bit first), and the programmed number of Stop bits to each character. Also, an even or odd Parity bit is inserted prior to the Stop bit(s), as defined by the Mode Instruction. The character is then transmitted as a serial data stream on the TxD output. The serial data is shifted out on the falling edge of $\overline{TxC}$ at a rate equal to 1, 1/16, or 1/64 that of the $\overline{TxC}$, as defined by the Mode Instruction. BREAK characters can be continuously sent to the TxD if commanded to do so.

When no data characters have been loaded into the 8251A the TxD output reamins "high" (marking) unless a Break (continuously low) has been programmed.

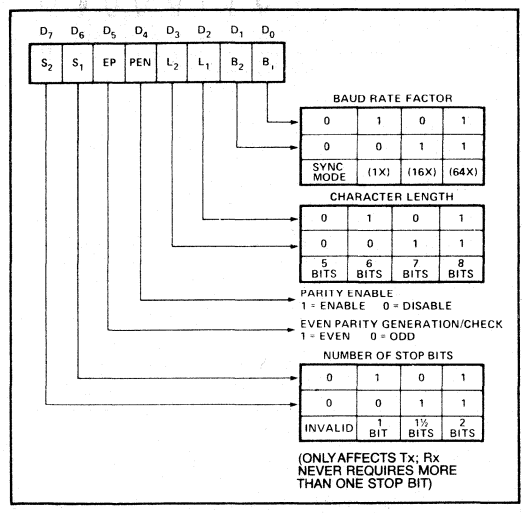

Figure 8. Mode Instruction Format, Asynchronous Mode

Asynchronous Mode (Receive)

The RxD line is normally high. A falling edge on this line triggers the beginning of a START bit. The validity of this START bit is checked by again strobing this bit at its nominal center (16X or 64X mode only). If a low is detected again, it is a valid START bit, and the bit counter will start counting. The bit counter thus locates the center of the data bits, the parity bit (if it exists) and the stop bits. If parity error occurs, the parity error flag is set. Data and parity bits are sampled on the RxD pin with the rising edge of $\overline{RxC}$. If a low level is detected as the STOP bit, the Framing Error flag will be set. The STOP bit signals the end of a character. Note that the *receiver* requires only *one* stop bit, regardless of the number of stop bits programmed. This character is then loaded into the parallel I/O buffer of the 8251A. The RxRDY pin is raised to signal the CPU that a character is ready to be fetched. If a previous character has not been fetched by the CPU, the present character replaces it in the I/O buffer, and the OVERRUN Error flag is raised (thus the previous character is lost). All of the error flags can be reset by an Error Reset Instruction. The occurrence of any of these errors will not affect the operation of the 8251A.

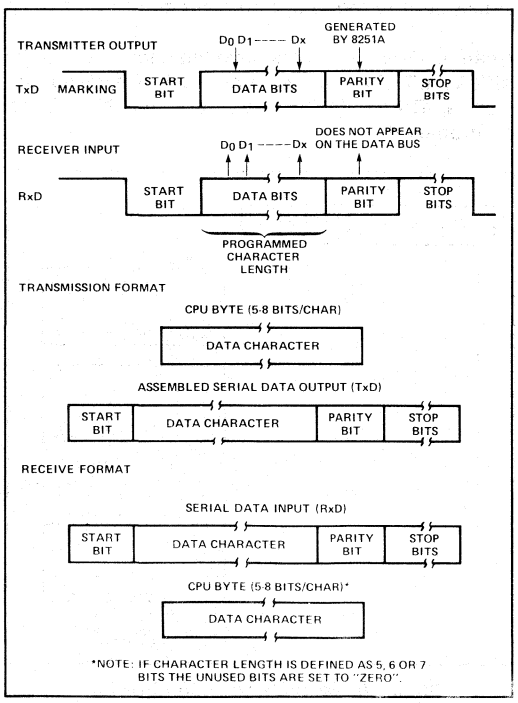

Figure 9. Asynchronous Mode

Synchronous Mode (Transmission)

The TxD output is continuously high until the CPU sends its first character to the 8251A which usually is a SYNC character. When the $\overline{CTS}$ line goes low, the first character is serially transmitted out. All characters are shifted out on the falling edge of $\overline{TxC}$. Data is shifted out at the same rate as the $\overline{TxC}$.

Once transmission has started, the data stream at the TxD output must continue at the $\overline{TxC}$ rate. If the CPU does not provide the 8251A with a data character before the 8251A Transmitter Buffers become empty, the SYNC characters (or character if in single SYNC character mode) will be automatically inserted in the TxD data stream. In this case, the TxEMPTY pin is raised high to signal that the 8251A is empty and SYNC characters are being sent out. TxEMPTY does not go low when the SYNC is being shifted out (see figure below). The TxEMPTY pin is internally reset by a data character being written into the 8251A.

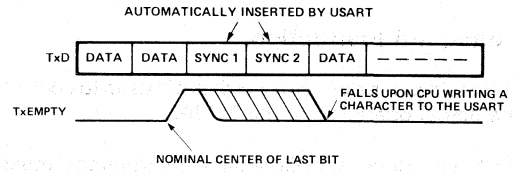

Synchronous Mode (Receive)

In this mode, character synchronization can be internally or externally achieved. If the SYNC mode has been programmed, ENTER HUNT command should be included in the first command instruction word written. Data on the RxD pin is then sampled on the rising edge of $\overline{RxC}$. The content of the Rx buffer is compared at every bit boundary with the first SYNC character until a match occurs. If the 8251A has been programmed for two SYNC characters, the subsequent received character is also compared; when both SYNC characters have been detected, the USART ends the HUNT mode and is in character synchronization. The SYNDET pin is then set high, and is reset automatically by a STATUS READ. If parity is programmed, SYNDET will not be set until the middle of the parity bit instead of the middle of the last data bit.

In the external SYNC mode, synchronization is achieved by applying a high level on the SYNDET pin, thus forcing the 8251A out of the HUNT mode. The high level can be removed after one $\overline{RxC}$ cycle. An ENTER HUNT command has no effect in the asynchronous mode of operation.

Parity error and overrun error are both checked in the same way as in the Asynchronous Rx mode. Parity is checked when not in Hunt, regardless of whether the Receiver is enabled or not.

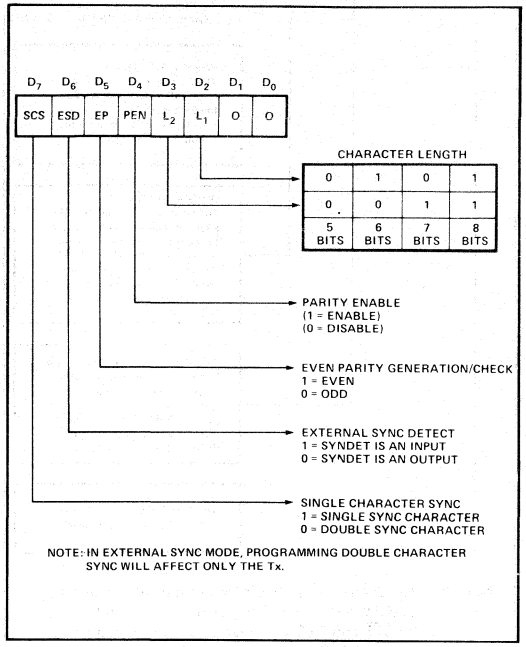

Figure 10. Mode Instruction Format, Synchronous Mode

The CPU can command the receiver to enter the HUNT mode if synchronization is lost. This will also set all the used character bits in the buffer to a "one," thus preventing a possible false SYNDET caused by data that happens to be in the Rx Buffer at ENTER HUNT time. Note that the SYNDET F/F is reset at each Status Read, regardless of whether internal or external SYNC has been programmed. This does not cause the 8251A to return to the HUNT mode. When in SYNC mode, but not in HUNT, Sync Detection is still functional, but only occurs at the "known" word boundaries. Thus, if one Status Read indicates SYNDET and a second Status Read also indicates SYNDET, then the programmed SYNDET characters have been received since the previous Status Read. (If double character sync has been programmed, then both sync characters have been contiguously received to gate a SYNDET indication.) When external SYNDET mode is selected, internal Sync Detect is disabled, and the SYNDET F/F may be set at any bit boundary.

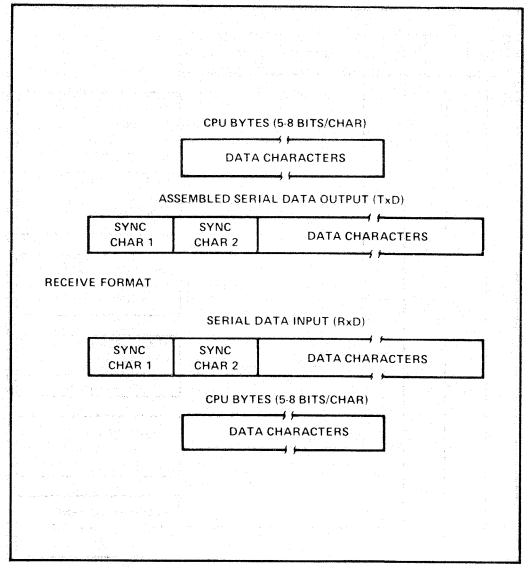

Figure 11. Data Format, Synchronous Mode

COMMAND INSTRUCTION DEFINITION

Once the functional definition of the 8251A has been programmed by the Mode Instruction and the sync characters are loaded (if in Sync Mode) then the device is ready to be used for data communication. The Command Instruction controls the actual operation of the selected format. Functions such as: Enable Transmit/Receive, Error Reset and Modem Controls are provided by the Command Instruction.

Once the Mode Instruction has been written into the 8251A and Sync characters inserted, if necessary, then all further "control writes" (C/D = 1) will load a Command Instruction. A Reset Operation (internal or external) will return the 8251A to the Mode Instruction format.

Note: Internal Reset on Power-up

When power is first applied, the 8251A may come up in the Mode, Sync character or Command format. To guarantee that the device is in the Command Instruction format before the Reset command is issued, it is safest to execute the worst-case initialization sequence (sync mode with two sync characters). Loading three 00Hs consecutively into the device with C/$\overline{D}$ = 1 configures sync operation and writes two dummy 00H sync characters. An Internal Reset command (40H) may then be issued to return the device to the "Idle" state.

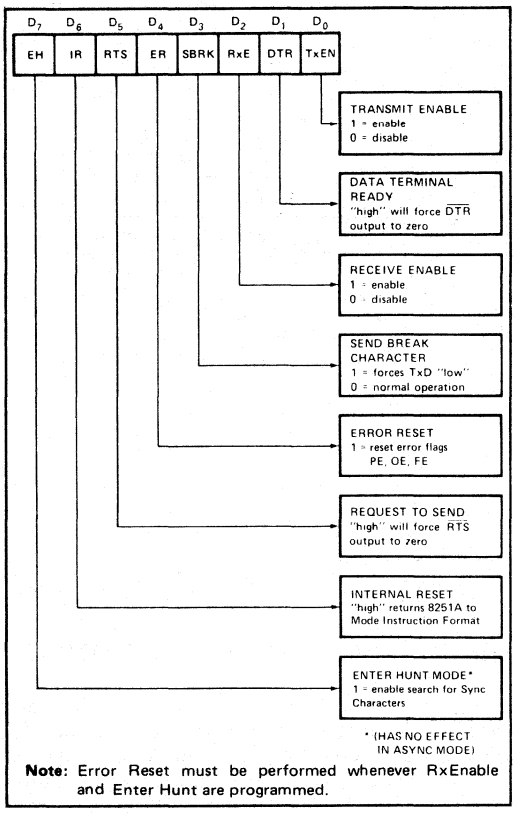

Note: Error Reset must be performed whenever RxEnable and Enter Hunt are programmed.

Figure 12. Command Instruction Format

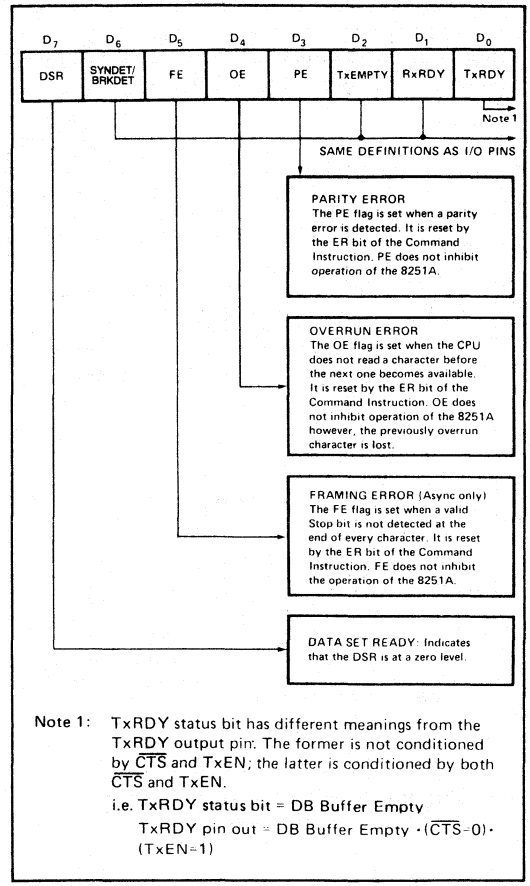

Note 1: TxRDY status bit has different meanings from the TxRDY output pin. The former is not conditioned by $\overline{CTS}$ and TxEN; the latter is conditioned by both $\overline{CTS}$ and TxEN.

i.e. TxRDY status bit = DB Buffer Empty

TxRDY pin out = DB Buffer Empty $\cdot(\overline{CTS}=0)\cdot$ (TxEN=1)

Figure 13. Status Read Format

STATUS READ DEFINITION

In data communication systems it is often necessary to examine the "status" of the active device to ascertain if errors have occurred or other conditions that require the processor's attention. The 8251A has facilities that allow the programmer to "read" the status of the device at any time during the functional operation. (Status update is inhibited during status read.)

A normal "read" command is issued by the CPU with $C/\overline{D} = 1$ to accomplish this function.

Some of the bits in the Status Read Format have identical meanings to external output pins so that the 8251A can be used in a completely polled or interrupt-driven environment. TxRDY is an exception.

Note that status update can have a maximum delay of 28 clock periods from the actual event affecting the status.

APPLICATIONS OF THE 8251A

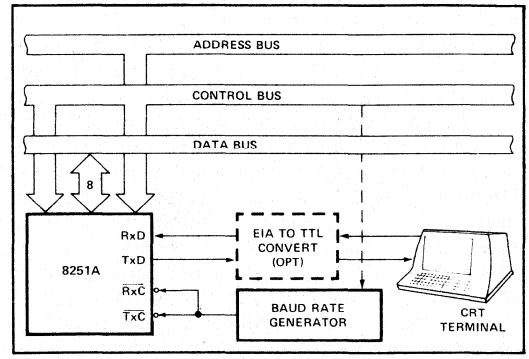

Figure 14. Asynchronous Serial Interface to CRT Terminal, DC—9600 Baud

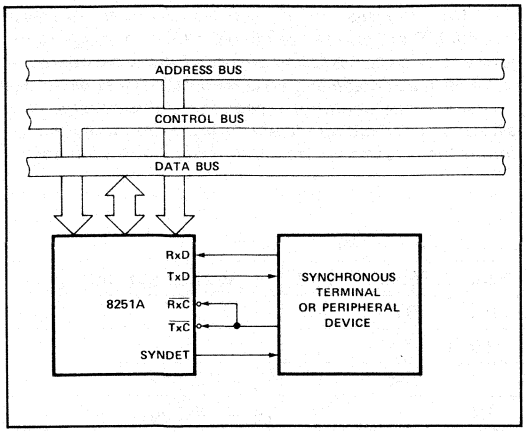

Figure 15. Synchronous Interface to Terminal or Peripheral Device

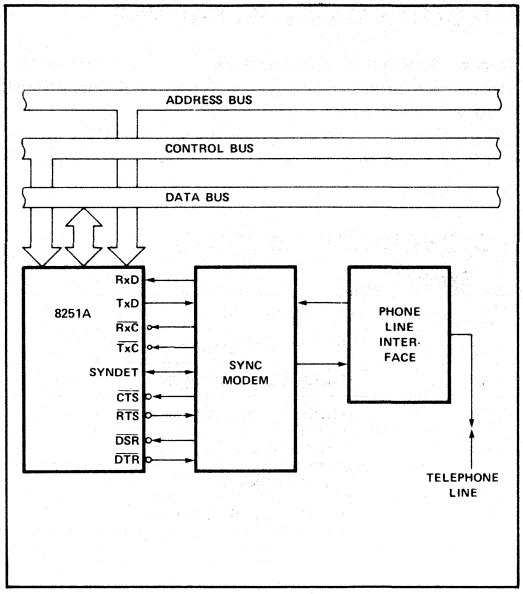

Figure 17. Synchronous Interface to Telephone Lines

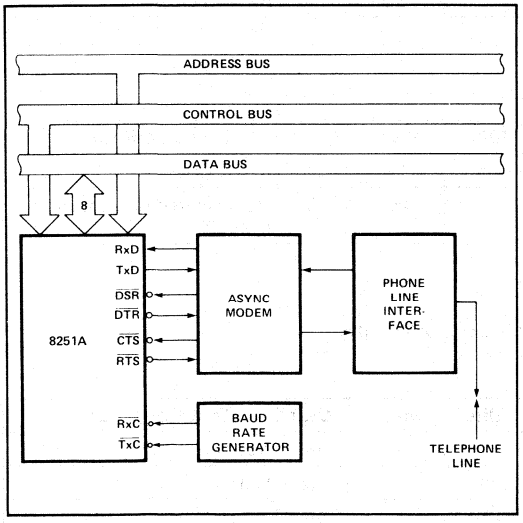

Figure 16. Asynchronous Interface to Telephone Lines

ABSOLUTE MAXIMUM RATINGS*

Ambient Temperature Under Bias ..... 0°C to 70°C
Storage Temperature ..... −65°C to +150°C
Voltage On Any Pin
With Respect To Ground ..... −0.5V to +7V
Power Dissipation ..... 1 Watt

NOTICE: Stresses above those listed under "Absolute Maximum Ratings" may cause permanent damage to the device. This is a stress rating only and functional operation of the device at these or any other conditions above those indicated in the operational sections of this specification is not implied. Exposure to absolute maximum rating conditions for extended periods may affect device reliability.

D.C. CHARACTERISTICS (T_A = 0°C to 70°C, V_{CC} = 5.0V ±5%, GND = 0V)

Symbol	Parameter	Min.	Max.	Unit	Test Conditions
V_{IL}	Input Low Voltage	−0.5	0.8	V	
V_{IH}	Input High Voltage	2.0	V_{CC}	V	
V_{OL}	Output Low Voltage		0.45	V	I_{OL} = 2.2 mA
V_{OH}	Output High Voltage	2.4		V	I_{OL} = −400 μA
I_{OFL}	Output Float Leakage		±10	μA	V_{OUT} = V_{CC} TO 0.45V
I_{IL}	Input Leakage		±10	μA	V_{IN} = V_{CC} TO 0.45V
I_{CC}	Power Supply Current		100	mA	All Outputs = High

CAPACITANCE (T_A = 25°C, V_{CC} = GND = 0V)

Symbol	Parameter	Min.	Max.	Unit	Test Conditions
C_{IN}	Input Capacitance		10	pF	fc = 1MHz
$C_{I/O}$	I/O Capacitance		20	pF	Unmeasured pins returned to GND

A.C. CHARACTERISTICS (T_A = 0°C to 70°C, V_{CC} = 5.0V ±5%, GND = 0V)

Bus Parameters (Note 1)

READ CYCLE

Symbol	Parameter	Min.	Max.	Unit	Test Conditions
t_{AR}	Address Stable Before $\overline{READ}$ ($\overline{CS}$, C/$\overline{D}$)	0		ns	Note 2
t_{RA}	Address Hold Time for $\overline{READ}$ ($\overline{CS}$, C/$\overline{D}$)	0		ns	Note 2
t_{RR}	$\overline{READ}$ Pulse Width	250		ns	
t_{RD}	Data Delay from $\overline{READ}$		200	ns	3, C_L = 150 pF
t_{DF}	$\overline{READ}$ to Data Floating	10	100	ns	

WRITE CYCLE

Symbol	Parameter	Min.	Max.	Unit	Test Condtions
t_{AW}	Address Stable Before $\overline{WRITE}$	0		ns	
t_{WA}	Address Hold Time for $\overline{WRITE}$	0		ns	
t_{WW}	$\overline{WRITE}$ Pulse Width	250		ns	
t_{DW}	Data Set-Up Time for $\overline{WRITE}$	150		ns	
t_{WD}	Data Hold Time for $\overline{WRITE}$	20		ns	
t_{RV}	Recovery Time Between WRITES	6		t_{CY}	Note 4

A.C. CHARACTERISTICS (Continued)

OTHER TIMINGS

Symbol	Parameter	Min.	Max.	Unit	Test Conditions
t_{CY}	Clock Period	320	1350	ns	Notes 5, 6
t_{ϕ}	Clock High Pulse Width	120	$t_{CY}-90$	ns	
$t_{\overline{\phi}}$	Clock Low Pulse Width	90		ns	
t_R, t_F	Clock Rise and Fall Time		20	ns	
t_{DTx}	TxD Delay from Falling Edge of $\overline{TxC}$		1	μs	
f_{Tx}	Transmitter Input Clock Frequency 1x Baud Rate 16x Baud Rate 64x Baud Rate	 DC DC DC	 64 310 615	 kHz kHz kHz	
t_{TPW}	Transmitter Input Clock Pulse Width 1x Baud Rate 16x and 64x Baud Rate	 12 1		 t_{CY} t_{CY}	
t_{TPD}	Transmitter Input Clock Pulse Delay 1x Baud Rate 16x and 64x Baud Rate	 15 3		 t_{CY} t_{CY}	
f_{Rx}	Receiver Input Clock Frequency 1x Baud Rate 16x Baud Rate 64x Baud Rate	 DC DC DC	 64 310 615	 kHz kHz kHz	
t_{RPW}	Receiver Input Clock Pulse Width 1x Baud Rate 16x and 64x Baud Rate	 12 1		 t_{CY} t_{CY}	
t_{RPD}	Receiver Input Clock Pulse Delay 1x Baud Rate 16x and 64x Baud Rate	 15 3		 t_{CY} t_{CY}	
t_{TxRDY}	TxRDY Pin Delay from Center of Last Bit		8	t_{CY}	Note 7
$t_{TxRDY\ CLEAR}$	TxRDY ↓ from Leading Edge of $\overline{WR}$		400	ns	Note 7
t_{RxRDY}	RxRDY Pin Delay from Center of Last Bit		26	t_{CY}	Note 7
$t_{RxRDY\ CLEAR}$	RxRDY ↓ from Leading Edge of $\overline{RD}$		400	ns	Note 7
t_{IS}	Internal SYNDET Delay from Rising Edge of $\overline{RxC}$		26	t_{CY}	Note 7
t_{ES}	External SYNDET Set-Up Time After Rising Edge of $\overline{RxC}$	18		t_{CY}	Note 7
$t_{TxEMPTY}$	TxEMPTY Delay from Center of Last Bit	20		t_{CY}	Note 7
t_{WC}	Control Delay from Rising Edge of WRITE (TxEn, $\overline{DTR}$, $\overline{RTS}$)	8		t_{CY}	Note 7
t_{CR}	Control to READ Set-Up Time ($\overline{DSR}$, $\overline{CTS}$)	20		t_{CY}	Note 7

A.C. CHARACTERISTICS (Continued)

NOTES:
1. AC timings measured V_{OH} = 2.0 V_{OL} = 2.0, V_{OL} = 0.8, and with load circuit of Figure 1.
2. Chip Select (CS) and Command/Data (C/D) are considered as Addresses.
3. Assumes that Address is valid before $R_D\downarrow$.
4. This recovery time is for Mode Initialization only. Write Data is allowed only when TxRDY = 1. Recovery Time between Writes for Asynchronous Mode is 8 t_{CY} and for Synchronous Mode is 16 t_{CY}.
5. The TxC and RxC frequencies have the following limitations with respect to CLK: For 1x Baud Rate, f_{Tx} or $f_{Rx} \leq 1/(30\ t_{CY})$:
   For 16x and 64x Baud Rate, f_{Tx} or $f_{Rx} \leq 1/(4.5\ t_{CY})$.
6. Reset Pulse Width = 6 t_{CY} minimum; System Clock must be running during Reset.
7. Status update can have a maximum delay of 28 clock periods from the event affecting the status.

TYPICAL Δ OUTPUT DELAY VS. Δ CAPACITANCE (pF)

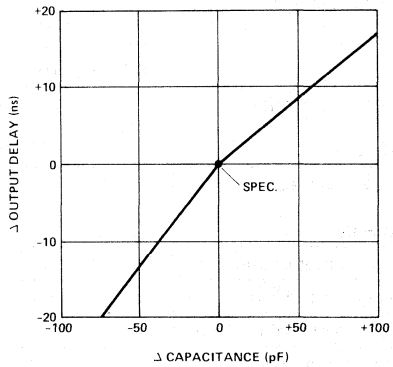

A.C. TESTING INPUT, OUTPUT WAVEFORM

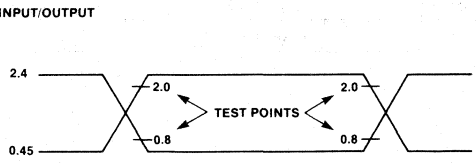

A.C. TESTING: INPUTS ARE DRIVEN AT 2.4V FOR A LOGIC "1" AND 0.45V FOR A LOGIC "0." TIMING MEASUREMENTS ARE MADE AT 2.0V FOR A LOGIC "1" AND 0.8V FOR A LOGIC "0."

A.C. TESTING LOAD CIRCUIT

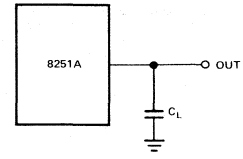

C_L = 150 pF

WAVEFORMS

SYSTEM CLOCK INPUT

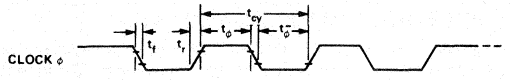

TRANSMITTER CLOCK AND DATA

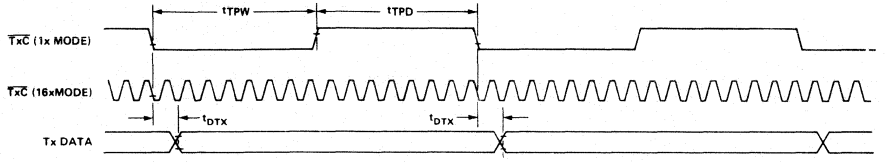

RECEIVER CLOCK AND DATA

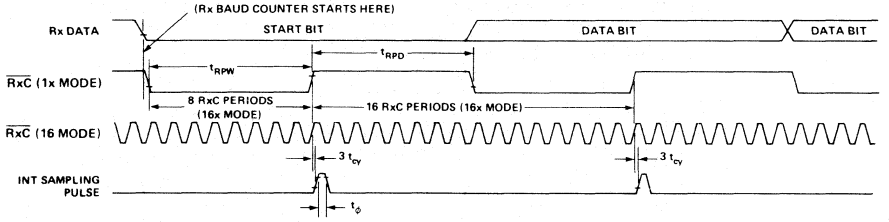

WRITE DATA CYCLE (CPU → USART)

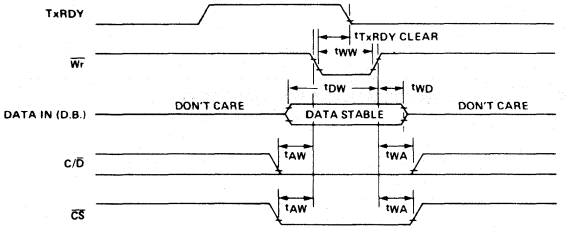

READ DATA CYCLE (CPU ← USART)

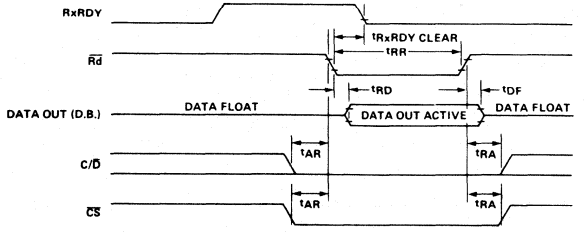

WAVEFORMS (Continued)

WRITE CONTROL OR OUTPUT PORT CYCLE (CPU → USART)

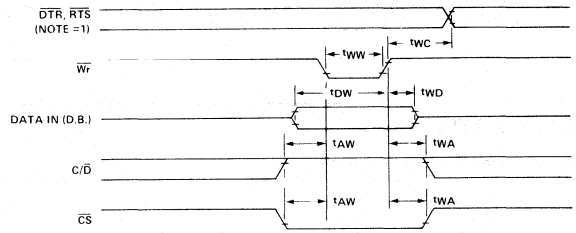

READ CONTROL OR INPUT PORT (CPU ← USART)

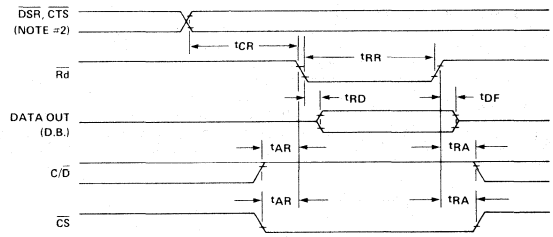

NOTE #1: T_{WC} INCLUDES THE RESPONSE TIMING OF A CONTROL BYTE.
NOTE #2: T_{CR} INCLUDES THE EFFECT OF CTS ON THE TxENBL CIRCUITRY.

TRANSMITTER CONTROL AND FLAG TIMING (ASYNC MODE)

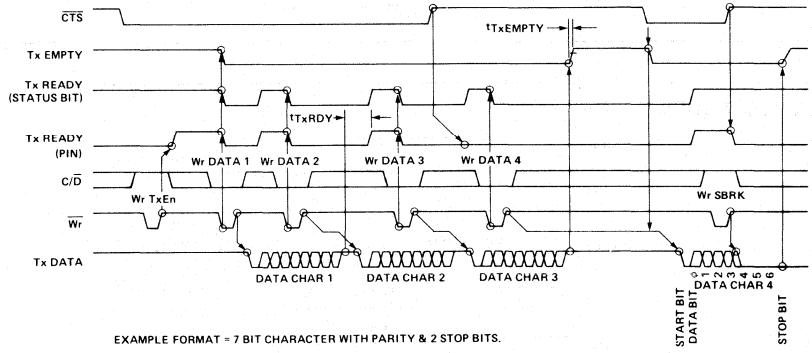

EXAMPLE FORMAT = 7 BIT CHARACTER WITH PARITY & 2 STOP BITS.

WAVEFORMS (Continued)

RECEIVER CONTROL AND FLAG TIMING (ASYNC MODE)

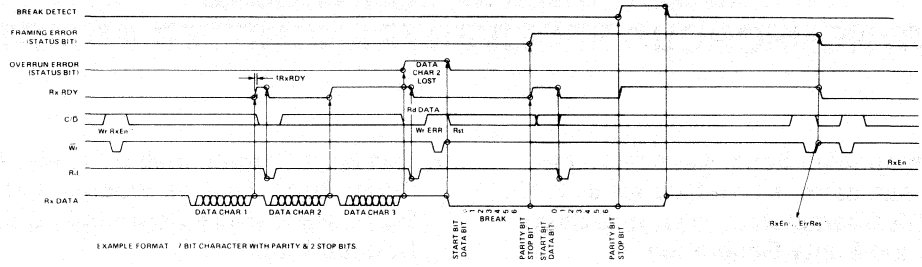

TRANSMITTER CONTROL AND FLAG TIMING (SYNC MODE)

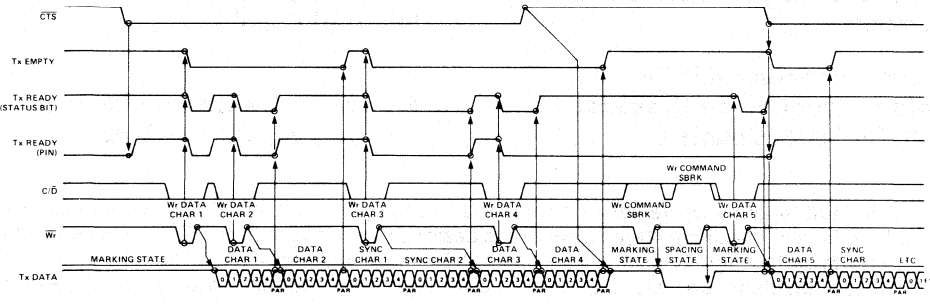

RECEIVER CONTROL AND FLAG TIMING (SYNC MODE)

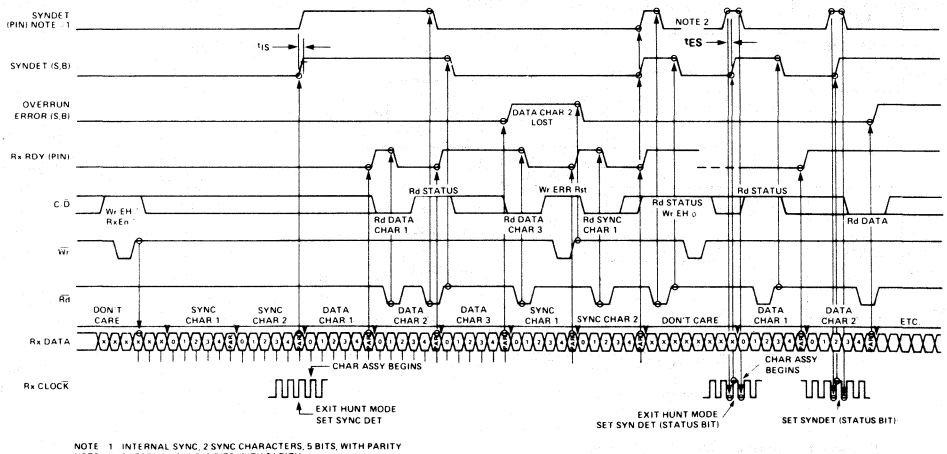

8256
MULTIFUNCTION UNIVERSAL ASYNCHRONOUS RECEIVER-TRANSMITTER (MUART)

- **Programmable Serial Asynchronous Communications Interface for 5-, 6-, 7-, or 8-Bit Characters, 1, 1½, or 2 Stop Bits, and Parity Generation**
- **On-Board Baud Rate Generator Programmable for 13 Common Baud Rates up to 19.2K Bits/second, or an External Baud Clock Maximum of 1M Bit/second**
- **Five 8-Bit Programmable Timer/Counters; Four Can Be Cascaded to Two 16-Bit Timer/Counters**
- **Two 8-Bit Programmable Parallel I/O Ports; Port 1 Can Be Programmed for Port 2 Handshake Controls and Event Counter Inputs**
- **Eight-Level Priority Interrupt Controller Programmable for 8085 or iAPX 86, iAPX 88 Systems and for Fully Nested Interrupt Capability**
- **Programmable System Clock to 1 ×, 2 ×, 3 ×, or 5 × 1.024 MHz**

The Intel® 8256 Multifunction Universal Asynchronous Receiver-Transmitter (MUART) combines five commonly used functions into a single 40-pin device. It is designed to interface to the 8048, 8085A, iAPX 86, and iAPX 88 to perform serial communications, parallel I/O, timing, event counting, and priority interrupt functions. All of these functions are fully programmable through nine internal registers. In addition, the five timer/counters and two parallel I/O ports can be accessed directly by the microprocessor.

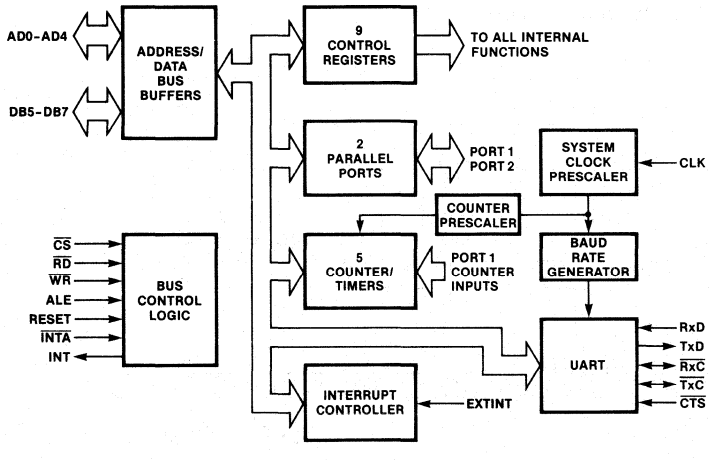

Figure 1. MUART Block Diagram

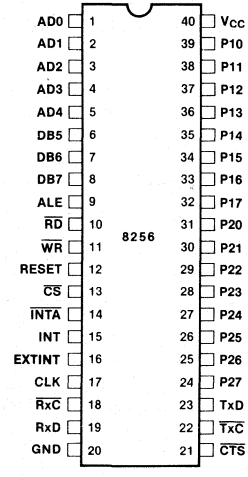

Figure 2. MUART Pin Configuration

Table 1. Pin Description

Symbol	Pin No.	Type	Name and Function
AD0-AD4 DB5-DB7	1-5 6-8	I/O	**Address/Data:** Three-State Address/Data lines which interface with the CPU lower 8-bit address/data bus. The 5-bit address is latched on the falling edge of ALE. In 8048 and 8085 mode, AD0-AD3 are used to select the proper register, while AD1-AD4 are used in 8086 and 8088 mode. The 8-bit bidirectional data bus is either written into or read from the chip depending on the latched $\overline{CS}$ and $\overline{RD}$ or $\overline{WR}$.
ALE	9	I	**Address Latch Enable:** Latches the 5 address lines on AD0-AD4 and $\overline{CS}$ on the falling edge.
$\overline{RD}$	10	I	**Read Control:** When this signal is low, the previously selected register is enabled onto the data bus.
$\overline{WR}$	11	I	**Write Control:** When this signal is low, the value on the data bus is placed into the previously selected register.
RESET	12	I	Pulse provided by the CPU to initialize the system. The MUART remains "idle" until it is reprogrammed by the CPU.
$\overline{CS}$	13	I	**Chip Select:** A low on this signal enables the MUART. It is latched with the address on the falling edge of ALE, and $\overline{RD}$ and $\overline{WR}$ have no effect unless $\overline{CS}$ was latched low during the ALE cycle.
$\overline{INTA}$	14	I	**Interrupt Acknowledge:** If the MUART has been enabled to respond to interrupts, it puts an RST on the bus for the 8085 or a vector for the 8086. The bit in the interrupt register is reset when the interrupt is placed onto the bus.
INT	15	O	**Interrupt:** A high signals the CPU that the MUART needs service.
EXTINT	16	I	**External Interrupt:** A high on this pin signals that an external device requests service. EXTINT must be held high until $\overline{INTA}$ or read interrupt occurs.
CLK	17	I	**System Clock:** This input provides an accurate timing source for the MUART. It must be 1×, 2×, 3×, or 5× 1.024 MHz and is used by the baud rate generator and real time clocks.
$\overline{RxC}$	18	I/O	**Receive Clock:** If baud rate 0 is selected, this input clocks bits into RxD on the rising edge. If a baud rate from $1\text{-}0F_{16}$ is selected, this output will provide a rising edge at the center of each received data bit. This output remains high during start, stop, and parity bits.
RxD	19	I	**Receive Data:** Serial data input from the modem or terminal to the MUART.
GND	20	PS	**Ground:** Power supply and logic ground reference.
V_{CC}	40	PS	**Power:** +5V POWER supply.
P17-P10	32-39	I/O	**Parallel I/O Port 1:** Each pin can be programmed as an input or an output to perform general purpose I/O functions for the CPU under software control. In addition to general I/O, I/O Port 1 can be programmed to a variety of special functions for handshake control, counter inputs, and special communications functions.
P27-P20	24-31	I/O	**Parallel I/O Port 2:** Each nibble (4 bits) of this port can be either an input or an output. Also, this port can be used as a bidirectional 8-bit port using handshake lines in Port 1.
TxD	23	O	**Transmit Data:** This output carries the serial data to the terminal or modem from the MUART.
$\overline{TxC}$	22	I/O	**Transmit Clock:** If the baud rate is 0, this input clocks data out of the transmitter on the falling edge. If a baud rate of 1 or 2 is selected, this input permits the user to provide a 32× or 64× clock which is used for the receiver and transmitter. If the baud rate is $3\text{-}0F_{16}$, the internal transmitter clock is output. If 1½ stop bits are selected and characters are continuously transmitted, the internal baud rate generator will be reset at the end of the stop bits and the clock will have a small positive spike instead of a half clock. A high-to-low transition occurs at the beginning of each bit and a low-to-high transition at the center of each bit.
$\overline{CTS}$	21	I	**Clear to Send:** This input enables the serial transmitter. If $\overline{CTS}$ is low, any character in the transmitter buffer will be sent. A single negative-going pulse causes the transmission of a single previously loaded character out of the transmitter buffer. If this pulse occurs when the buffer is empty or during the transmission of a character up to 0.5 of the first stop bit, it will be ignored. If a baud rate from $1\text{-}0F_{16}$ is selected, $\overline{CTS}$ must be low for at least 1/32 of a bit, or it will be ignored.

FUNCTIONAL DESCRIPTION

The 8256 Multi-Function Universal Asynchronous Receiver-Transmitter (MUART) combines five commonly used functions onto a single 40-pin device. The MUART performs asynchronous serial communications, parallel I/O, timing, event counting, and interrupt control.

Serial Communications

The serial communications portion of the MUART contains a full-duplex asynchronous receiver-transmitter (UART). A programmable baud rate generator is included on the MUART to permit a variety of operating speeds without external components. The UART can be programmed by the CPU for a variety of character sizes, parity generation and detection, error detection, and start/stop bit handling. The receiver checks the start and stop bits in the center of the bit, and a break halts the reception of data. The transmitter can send breaks and can be controlled by an external enable pin.

Parallel I/O

The MUART includes 16 bits of general purpose parallel I/O. Eight bits (Port 1) can be individually changed from input to output or used for special I/O functions. The other eight bits (Port 2) can be used as nibbles (4 bits) or as bytes. These eight bits also include a handshaking capability using two pins on Port 1.

Counter/Timers

There are five 8-bit counter/timers on the MUART. The timers can be programmed to use either a 1 kHz or 16 kHz clock generated from the system clock. Four of the 8-bit counter/timers can be cascaded to two 16-bit counter/timers, and one of the 8-bit counter/timers can be reset to its initial value by an external signal.

Interrupts

An eight-level priority interrupt controller can be configured for fully nested or normal interrupt priority. Seven of the eight interrupts service functions on the MUART (counter/timers, UART), and one external interrupt is provided which can be used for a particular function or for chaining interrupt controllers or more MUARTs. The MUART will support 8085 and 8086/88 systems with direct interrupt vectoring, or the MUART can be polled to determine the cause of the interrupt.

Command Register 1

L1	L0	S1	S0	BRKI	BITI	8086	FRQ
(0R)					(0W)		

FRQ — Timer Frequency Select

This bit selects between two frequencies for the five timers. If FRQ = 0, the timer input frequency is 16 kHz (62.5 μs). If FRQ = 1, the timer input frequency is 1 kHz (1 ms). The selected clock frequency is shared by all the counter/timers enabled for timing; thus, all timers must run with the same time base.

8086 — 8086 Mode Enable

This bit selects between 8048/8085 mode and 8086/8088 mode. In 8085 mode (8086 = 0), A0 to A3 are used to address the internal registers, and an RST instruction is generated in response to the first $\overline{INTA}$. In 8086 mode (8086 = 1), A1 to A4 are used to address the internal registers, and A0 is used as an extra chip select (A0 must equal zero to be enabled). The response to $\overline{INTA}$ is for 8086 interrupts where the first $\overline{INTA}$ is ignored, and an interrupt vector (40_{16} to 47_{16}) is placed on the bus in response to the second $\overline{INTA}$.

BITI — Interrupt on Bit Change

This bit disables the Timer 2 interrupt and enables an interrupt when a low-to-high transition occurs on pin 7 of Port 1 (pin 32).

BRKI — Break-in Detect Enable

This bit enables the break-in detect feature. A break-in is detected when pin 6 of Port 1 (pin 33) is low during the first stop bit of a transmitted character. This could be used to detect a break-in condition by connecting the serial transmission line to pin 33. A break-in detect is OR-ed with break detect in bit 3 of the Status Register. If $\overline{RxC}$ and $\overline{TxC}$ are used for the serial bit rates, break-in cannot be detected.

S0, S1 — Stop Bit Length

S1	S0	Stop Bit Length
0	0	1
0	1	1.5
1	0	2
1	1	0.75

If 0.75 stop bits is selected, $\overline{CTS}$ becomes edge sensitive rather than level sensitive. A high-to-low transition of $\overline{CTS}$ *immediately* initiates the transmission of the next character. A high-to-low transition will be ignored if the transmit buffer is empty, or if it occurs before 0.75 of the first stop bit. It will shorten the stop

Table 2. MUART Registers

Read Registers								8085 Mode: AD3 / 8086 Mode: AD4	AD2 / AD3	AD1 / AD2	AD0 / AD1	Write Registers							
L1	L0	S1	S0	BRKI	BITI	8086	FRQ	0	0	0	0	L1	L0	S1	S0	BRKI	BITI	8086	FRQ
Command 1												Command 1							
PEN	EP	C1	C0	B3	B2	B1	B0	0	0	0	1	PEN	EP	C1	C0	B3	B2	B1	B0
Command 2												Command 2							
0	RxE	IAE	NIE	0	SBRK	TBRK	0	0	0	1	0	SET	RxE	IAE	NIE	END	SBRK	TBRK	RST
Command 3												Command 3							
T35	T24	T5C	CT3	CT2	P2C2	P2C1	P2C0	0	0	1	1	T35	T24	T5C	CT3	CT2	P2C2	P2C1	P2C0
Mode												Mode							
P17	P16	P15	P14	P13	P12	P11	P10	0	1	0	0	P17	P16	P15	P14	P13	P12	P11	P10
Port 1 Control												Port 1 Control							
L7	L6	L5	L4	L3	L2	L1	L0	0	1	0	1	L7	L6	L5	L4	L3	L2	L1	L0
Interrupt Enable												Set Interrupts							
D7	D6	D5	D4	D3	D2	D1	D0	0	1	1	0	L7	L6	L5	L4	L3	L2	L1	L0
Interrupt Address												Reset Interrupts							
D7	D6	D5	D4	D3	D2	D1	D0	0	1	1	1	D7	D6	D5	D4	D3	D2	D1	D0
Receiver Buffer												Transmitter Buffer							
D7	D6	D5	D4	D3	D2	D1	D0	1	0	0	0	D7	D6	D5	D4	D3	D2	D1	D0
Port 1												Port 1							
D7	D6	D5	D4	D3	D2	D1	D0	1	0	0	1	D7	D6	D5	D4	D3	D2	D1	D0
Port 2												Port 2							
D7	D6	D5	D4	D3	D2	D1	D0	1	0	1	0	D7	D6	D5	D4	D3	D2	D1	D0
Timer 1												Timer 1							
D7	D6	D5	D4	D3	D2	D1	D0	1	0	1	1	D7	D6	D5	D4	D3	D2	D1	D0
Timer 2												Timer 2							
D7	D6	D5	D4	D3	D2	D1	D0	1	1	0	0	D7	D6	D5	D4	D3	D2	D1	D0
Timer 3												Timer 3							
D7	D6	D5	D4	D3	D2	D1	D0	1	1	0	1	D7	D6	D5	D4	D3	D2	D1	D0
Timer 4												Timer 4							
D7	D6	D5	D4	D3	D2	D1	D0	1	1	1	0	D7	D6	D5	D4	D3	D2	D1	D0
Timer 5												Timer 5							
INT	RBF	TBE	TRE	BD	PE	OE	FE	1	1	1	1	0	RS4	RS3	RS2	RS1	RS0	TME	DSC
Status												Modification							

bit if it occurs after ¾ of the stop bit has been sent. If $\overline{CTS}$ is high or low or a low-to-high transition occurs, the transmitter remains idle.

L0, L1 — Character Length

L1	L0	Character Length
0	0	8
0	1	7
1	0	6
1	1	5

Command Register 2

PEN	EP	C1	C0	B3	B2	B1	B0
(1R)				(1W)			

B0, B1, B2, B3 — Baud Rate Select

B3	B2	B1	B0	Baud Rate	Sampling Rate
0	0	0	0	$\overline{TxC}$, $\overline{RxC}$	1
0	0	0	1	$\overline{TxC}$/64	64
0	0	1	0	$\overline{TxC}$/32	32
0	0	1	1	19200	32
0	1	0	0	9600	64
0	1	0	1	4800	64
0	1	1	0	2400	64
0	1	1	1	1200	64
1	0	0	0	600	64
1	0	0	1	300	64
1	0	1	0	200	64
1	0	1	1	150	64
1	1	0	0	110	64
1	1	0	1	100	64
1	1	1	0	75	64
1	1	1	1	50	64

If the baud rate is 0, then both the transmitter and receiver operate from separate external clocks. If the baud rate is 1 or 2, then both the transmitter and receiver divide the $\overline{TxC}$ by 64 or 32, respectively.

C0, C1 — System Clock Divider

C1	C0	Divider Ratio	System Clock Frequency
0	0	5	5.120 MHz
0	1	3	3.072 MHz
1	0	2	2.048 MHz
1	1	1	1.024 MHz

EP — Even Parity

If parity is enabled, then even parity is enabled by a 1 and odd parity is enabled by a 0.

PEN — Parity Enable

This enables parity detection and generation. The type of parity is determined by the EP bit.

Command Register 3

SET	RxE	IAE	NIE	END	SBRK	TBRK	RST
	(2R)				(2W)		

Command Register 3 is different from the first two registers because it has a bit set/reset capability. Writing a byte with bit 7 high sets any bits which were also high. Writing a byte with bit 7 low resets any bits which were high. If any bit 0–6 is low, no change occurs to that bit. When Command Register 3 is read, bits 0, 3, and 7 will always be zero.

RST — Reset

If RST is set, the following events occur:

1. All bits in the Status Register except bits 4 and 5 are cleared, and bits 4 and 5 are set.
2. The Interrupt Enable, Interrupt Request, and Interrupt Service Registers are cleared.
3. The receiver and transmitter are reset. The transmitter goes idle (TxD is high), and the receiver enters start bit search mode.
4. If Port 2 is programmed for handshake mode, $\overline{IBF}$ and $\overline{OBF}$ are reset high.

RST does *not* alter ports, data registers or command registers, but it halts any operation in progress. RST is automatically cleared.

TBRK — Transmit Break

This causes the transmitter data to be set low, and it stays low until TBRK is cleared. As long as break is active, data transfer from the Transmitter Buffer to the Transmitter Register will be inhibited.

SBRK — Single Character Break

This causes the transmitter data to be set low for one character including start bit, data bits, parity bit, and stop bits. SBRK is automatically cleared when time for the last data bit has passed. It will start after the character in progress completes and will delay the next data transfer from the Transmitter Buffer to the Transmitter Register until TxD returns to an idle (marking) state. If both TBRK and SBRK are set, break will be sent as long as TBRK is set, but SBRK will be cleared after one character time of break. If SBRK is set again, it remains set for another character. The user can send a definite number of break characters in this manner by clearing TBRK after setting SBRK for the last character time.

END — End of Interrupt

If fully nested interrupt mode is selected, this bit resets the currently served interrupt level in the Interrupt Service Register. *This command must occur at the end of each interrupt service routine during fully nested*

interrupt mode. END is automatically cleared when the Interrupt Service Register (internal) is cleared. See the NIE description for more information on nested interrupt servicing. END is ignored if nested interrupts are not enabled.

NIE — Nested Interrupt Enable

This bit enables fully nested interrupts. In this mode, the service routine for a lower priority interrupt can be interrupted by a request from a higher priority task.

In fully nested interrupt mode, $\overline{INTA}$ or reading the Interrupt Address Register resets the highest priority interrupt bit in the Interrupt Register (internal), sets the corresponding bit in the Interrupt Service Register (internal), and resets INT. If an interrupt of higher priority than the currently served interrupt is requested or the END bit is set while another interrupt request is pending, the INT line will go high again. If an interrupt service routine is interrupted by an interrupt of higher priority, two or more bits in the Interrupt Service Register will be set.

If NIE is low, interrupt priority is used only when two interrupts occur at the same time. INT will be high as long as the CPU has not responded to all the interrupts in the Interrupt Register.

IAE — Interrupt Acknowledge Enable

This bit enables an automatic response to $\overline{INTA}$. The particular response is determined by the 8086 bit in Command Register 1.

RxE — Receiver Enable

This bit enables the serial receiver. The Receiver Buffer and all receiver status information will be disabled except for the break detect status.

SET — Bit Set/Reset

If this bit is high during a write to Command Register 3, then any bit marked by a high will be set. If this bit is low, then any bit marked by a high will be cleared.

Mode Register

T35	T24	T5C	CT3	CT2	P2C2	P2C1	P2C0
(3R)					(3W)		

P2C2, P2C1, P2C0 — Port 2 Control

				Direction	
P2C2	P2C1	P2C0	Mode	Upper	Lower
0	0	0	nibble	input	input
0	0	1	nibble	input	output
0	1	0	nibble	output	input
0	1	1	nibble	output	output
1	0	0	byte handshake	input	
1	0	1	byte handshake	output	
1	1	0	*DO NOT USE*		
1	1	1	test		

If test mode is selected and BRG of Port 1 Control Register is set, then the output from the internal baud rate generator is placed on pin 4 of Port 1 (pin 35).

CT2, CT3 — Counter/Timer Mode

If CT2 or CT3 are high, then counter/timer 2 or 3 respectively is configured as an event counter on pin 2 or 3 respectively of Port 1 (pins 37 or 36). The event counter decrements the count by one on each low-to-high transition of the external input. If CT2 or CT3 is low, then the respective counter/timer is configured as a timer and the Port 1 pins are used for parallel I/O.

T5C — Timer 5 Control

If T5C is set, then Timer 5 can be preset and started by an external signal. Writing to the Timer 5 Register loads the Timer 5 Save Register and stops the timer. A high-to-low transition on pin 5 of Port 1 (pin 34) loads the timer with the saved value and starts the timer. The next high-to-low transition on pin 5 retriggers the timer by reloading it with the initial value and continues timing.

When the timer reaches zero it issues an interrupt request, disables its interrupt level and continues counting. A subsequent high-to-low transition on pin 5 resets Timer 5 to its initial value. For another timer interrupt, the Timer 5 interrupt enable bit must be set again.

T35, T24 — Cascade Timers

These two bits cascade Timers 3 and 5 or 2 and 4. Timers 2 and 3 are the lower bytes, while Timers 4 and 5 are the upper bytes. If T5C is set, then both Timers 3 and 5 can be preset and started by an external pulse. When a high-to-low transition occurs, Timer 5 is preset to its saved value, but Timer 3 is always preset to all ones. If either CT2 or CT3 is set, then the corresponding timer pair is a 16-bit event counter.

Port 1 Control Register

P17	P16	P15	P14	P13	P12	P11	P10
	(4R)				(4W)		

Each bit in the Port 1 Control Register configures the direction of the corresponding pin. If the bit is high, the pin is an output, and if it is low the pin is an input. Every Port 1 pin has another function which is controlled by other registers. If that special function is disabled, the pin functions as a general I/O pin as specified by this register. The special functions for each pin are described below.

Port 10, 11 — Handshake Control

If byte handshake control is enabled for Port 2 by the Mode Register, then Port 10 is programmed as $\overline{STB}$/$\overline{ACK}$ handshake control input and Port 11 is programmed as $\overline{IBF}$/$\overline{OBF}$ handshake control output.

If byte handshake mode is enabled for output on Port 2, $\overline{OBF}$ indicates that a character has been loaded into the

Port 2 output buffer. When an external device reads the data, it acknowledges this operation by driving $\overline{ACK}$ low. $\overline{OBF}$ is set low by writing to Port 2 and is reset high by $\overline{ACK}$.

If byte handshake mode is enabled for input on Port 2, $\overline{STB}$ is an input to the MUART to latch the data into Port 2. After the data is latched, $\overline{IBF}$ is driven low. $\overline{IBF}$ is reset high when Port 2 is read.

Port 12, 13 — Counter 2, 3 Input

If Timer 2 or Timer 3 is programmed as an event counter by the mode register, then Port 12 or 13 is the counter input for Event Counter 2 or 3, respectively.

Port 14 — Baud Rate Generator Output Clock

If test mode is enabled by the Mode Register and Command Register 2 baud rate select is greater than 2, then Port 14 is an output from the internal baud rate generator.

Port 15 — Timer 5 Trigger

If T5C is set in the Mode Register enabling a re-triggerable timer, then Port 15 is the input which starts and reloads Timer 5.

Port 16 — Break-in Detect

If break-in detect is enabled by BRKI in Command Register 1, then this input is used to sense a break-in. If Port 16 is low while the serial transmitter is sending the last stop bit, then a break-in condition is signaled.

Port 17 — Port Interrupt Source

If BITI in Command Register 1 is set, then a low-to-high transition on Port 17 generates an interrupt request on priority level 1.

Receiver and Transmitter Buffer

D7	D6	D5	D4	D3	D2	D1	D0
	(7R)				(7W)		

Both the transmitter and the receiver in the MUART are fully double buffered. The Receiver Buffer full flag is cleared when the character is read. If the character is not read before the next character's first stop bit, then an overrun error is generated. Bytes written to the Transmitter Buffer are held until the Transmitter Register (internal) is empty. If the Transmitter Register is empty, the byte is transferred immediately and the Transmitter Buffer empty flag is set. If a serial character length is less than 8 bits, then the unused most significant bits are set to zero on a read and are ignored on a write.

Port 1

D7	D6	D5	D4	D3	D2	D1	D0
	(8R)				(8W)		

Writing to Port 1 sets the data in the Port 1 output latch. Writing to an input pin does not affect the pin, but the data is stored and will be output if the direction of the pin is changed later. If the pin is used as a control signal, the pin will not be affected, but the data is stored. Reading Port 1 transfers the data in Port 1 onto the data bus. Reading an output pin or a control pin puts the data in the output latch (*not* the control signal) onto the data bus.

Interrupt Enable Register

L7	L6	L5	L4	L3	L2	L1	L0
	(5R)				(5W = enable, 6W = disable)		

Interrupts are enabled by writing to the Set Interrupts Register (5W). Interrupts are disabled by writing to the Reset Interrupts Register (6W). Each bit set by the Set Interrupts Register (5W) will enable that level interrupt, and each bit set in the Reset Interrupts Register (6W) will disable that level interrupt. The user can determine which interrupts are enabled by reading the Interrupt Enable Register (5R).

Priority		Source
Highest	L0	Timer 1
	L1	Timer 2 or Port Interrupt
	L2	External Interrupt (EXTINT)
	L3	Timer 3 or Timers 3 & 5
	L4	Receiver Interrupt
	L5	Transmitter Interrupt
	L6	Timer 4 or Timers 2 & 4
Lowest	L7	Timer 5 or Port 2 Handshaking

Port 2

D7	D6	D5	D4	D3	D2	D1	D0
	(9R)				(9W)		

Writing to Port 2 sets the data in the Port 2 output latch. Writing to an input pin does not affect the pin, but it does store the data in the latch. Reading Port 2 puts the input pins onto the bus or the contents of the output latch for output pins.

Timer 1-5

D7	D6	D5	D4	D3	D2	D1	D0
($0A_{16}$-$0E_{16}$ R)				($0A_{16}$-$0E_{16}$ W)			

Reading Timer N puts the contents of the timer onto the data bus. If the counter changes while $\overline{RD}$ is low, the value on the data bus will not change. If two timers are cascaded, reading the high order byte will cause the low order byte to be latched. Reading the low order byte will unlatch them both. Writing to either timer or de-cascading them also clears the latch condition. Writing to a timer sets the starting value of that timer. If two timers are cascaded, writing to the high order byte presets the low order byte to all ones. Loading only the high order byte with a value of X leads to a count of X·256+255. Timers count down continuously. If the interrupt is enabled, it occurs when the counter changes from 1 to 0. When the interrupt is set in the Interrupt Register, interrupts are disabled in the Interrupt Mask Register.

Status Register

INT	RBF	TBE	TRE	BD	PE	OE	FE
($0F_{16}$ R)							

FE — Framing Error, Transmission Mode

If transmission mode is disabled (in Modification Register), then FE indicates a framing error. A framing error is detected during the *first* stop bit. The error is reset by reading the Status Register or by a chip reset. A framing error does not inhibit the loading of the Receiver Buffer. If RxD remains low, the receiver will assemble the next character. The false stop bit is treated as the next start bit, and no high-to-low transition on RxD is required to synchronize the receiver.

If transmission mode is enabled, then this bit is used to suggest the transmitter was sending. FE will be high if the transmitter is active during the reception of the parity bit (or last data bit for no-parity). It is reset if the transmitter is not active or by a chip reset. The bit is intended to imply that the received character is from the transmitter in half-duplex systems.

OE — Overrun Error

If the user does not read the character in the Receiver Buffer before the next character is received and transferred to this register, then the OE bit is set. The OE flag is set during the reception of the first stop bit and is cleared when the Status Register is read or when a chip reset occurs.

PE — Parity Error

A parity error is set during the first stop bit and is reset by reading the Status Register or by a chip reset.

BD — Break Detect, Break-in Detect

If BRKI in Command Register 1 is set to enable break-in detect, then BD indicates a break-in condition. If Port 16 is low during the transmission of the last stop bit, then BD will be set near the end of the last stop bit. Break-in detect can only be detected if the internal baud rate generator is used. Break-in remains set until the Status Register is read or the chip is reset.

If BRKI is low, then BD indicates a break condition on the receiver. BD is set when the first stop bit of a break is sampled and will remain set until the Status Register is read or the chip is reset. The receiver will remain idle until the next high-to-low transition on RxD. A detected break inhibits the loading of the Receiver Buffer.

TRE — Transmitter Register Empty

This status bit indicates that the Transmitter Register is busy. It is set by a chip reset and when the last stop bit has left the transmitter. It is reset when a character is loaded into the Transmitter Register. If $\overline{CTS}$ is low, the Transmitter Register will be loaded during the transmission of the start bit. If $\overline{CTS}$ is high at the end of a character, TRE will remain high and no character will be loaded into the Transmitter Register until $\overline{CTS}$ goes low. If the transmitter was inactive before a character is loaded into the Transmitter Buffer, the Transmitter Register will be empty temporarily while the buffer is full. However, the data in the buffer will be transferred to the transmitter register immediately and TRE will be cleared while TBE is set.

TBE — Transmitter Buffer Empty

TBE indicates the Transmitter Buffer is empty and is ready to accept a character. TBE is set by a chip reset or the transfer of data to the Transmitter Register and is cleared when a character is written to the transmitter buffer.

RBF — Receiver Buffer Full

RBF is set when the Receiver Buffer has been loaded with a new character during the sampling of the first stop bit. RBF is cleared by reading the receiver buffer or by a chip reset.

INT — Interrupt Pending

The INT bit reflects the state of the INT pin (pin 15) and indicates an interrupt is pending in the Interrupt Register. It is reset by $\overline{INTA}$ or by reading the Interrupt Address Register if only one interrupt is pending and by a chip reset.

FE, OE, PE, RBF, and break detect all generate a level 4 interrupt when the receiver samples the first stop bit. TRE, TBE, and break-in detect generate a level 5 interrupt. TRE generates an interrupt when TBE is set and the Transmitter Register finishes transmitting. The

break-in detect interrupt is issued at the same time as TBE or TRE.

Modification Register

0	RS4	RS3	RS2	RS1	RS0	TME	DSC

($0F_{16}$ W)

DSC — Disable Start Bit Check

DSC disables the receiver's start bit check. In this state the receiver will not be reset if RxD is not low at the center of the start bit. This function is disabled by a chip reset.

TME — Transmission Mode Enable

TME enables transmission mode and disables framing error detection. A chip reset disables transmission mode and enables framing error detection.

RS0, RS1, RS2, RS3, RS4 — Receiver Sample Time

The number in RSn alters when the receiver samples RxD. A chip reset sets this value to 0 which is the center of the bit (sample time = 16). The receiver sample time can be modified only if the receiver is *not* clocked by $\overline{RxC}$.

				Sample Time	
RS4	**RS3**	**RS2**	**RS1**	**RS0 = 0**	**RS0 = 1**
0	1	1	1	2	1
0	1	1	0	4	3
0	1	0	1	6	5
0	1	0	0	8	7
0	0	1	1	10	9
0	0	1	0	12	11
0	0	0	1	14	13
0	0	0	0	16	15
1	1	1	1	18	17
1	1	1	0	20	19
1	1	0	1	22	21
1	1	0	0	24	23
1	0	1	1	26	25
1	0	1	0	28	27
1	0	0	1	30	29
1	0	0	0	32	31

8273, 8273-4, 8273-8
PROGRAMMABLE HDLC/SDLC PROTOCOL CONTROLLER

- **CCITT X.25 Compatible**
- **HDLC/SDLC Compatible**
- **Full Duplex, Half Duplex, or Loop SDLC Operation**
- **Up to 64K Baud Synchronous Transfers**
- **Automatic FCS (CRC) Generation and Checking**
- **Up to 9.6K Baud with On-Board Phase Locked Loop**
- **Programmable NRZI Encode/Decode**
- **Two User Programmable Modem Control Ports**
- **Digital Phase Locked Loop Clock Recovery**
- **Minimum CPU Overhead**
- **Fully Compatible with 8048/8080/8085/ 8088/8086 CPUs**
- **Single +5V Supply**

The Intel® 8273 Programmable HDLC/SDLC Protocol Controller is a dedicated device designed to support the ISO/ CCITT's HDLC and IBM's SDLC communication line protocols. It is fully compatible with Intel's new high performance microcomputer systems such as the MCS-88/86™. A frame level command set is achieved by a unique microprogrammed dual processor chip architecture. The processing capability supported by the 8273 relieves the system CPU of the low level real-time tasks normally associated with controllers.

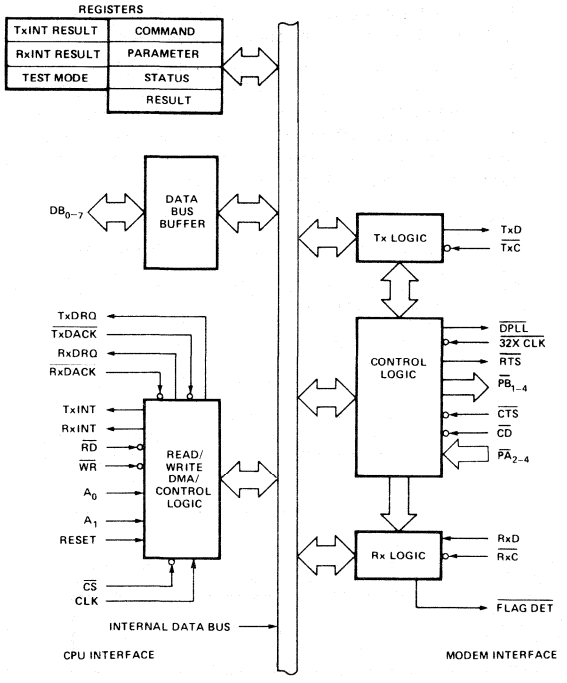

Figure 1. Block Diagram

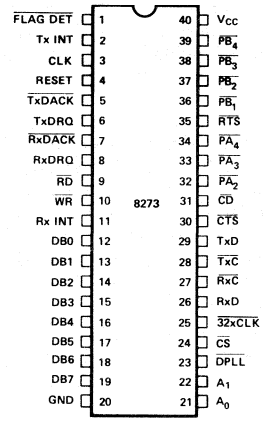

Figure 2. Pin Configuration

A BRIEF DESCRIPTION OF HDLC/SDLC PROTOCOLS

General

The High Level Data Link Control (HDLC) is a standard communication link protocol established by International Standards Organization (ISO). HDLC is the discipline used to implement ISO X.25 packet switching systems.

The Synchronous Data Link Control (SDLC) is an IBM communication link protocol used to implement the System Network Architecture (SNA). Both the protocols are bit oriented, code independent, and ideal for full duplex communication. Some common applications include terminal to terminal, terminal to CPU, CPU to CPU, satellite communication, packet switching and other high speed data links. In systems which require expensive cabling and interconnect hardware, any of the two protocols could be used to simplify interfacing (by going serial), thereby reducing interconnect hardware costs. Since both the protocols are speed independent, reducing interconnect hardware could become an important application.

Network

In both the HDLC and SDLC line protocols, according to a pre-assigned hierarchy, a PRIMARY (Control) STATION controls the overall network (data link) and issues commands to the SECONDARY (Slave) STATIONS. The latter comply with instructions and respond by sending appropriate RESPONSES. Whenever a transmitting station must end transmission prematurely it sends an ABORT character. Upon detecting an abort character, a receiving station ignores the transmission block called a FRAME. Time fill between frames can be accomplished by transmitting either continuous frame preambles called FLAGS or an abort character. A time fill within a frame is not permitted. Whenever a station receives a string of more that fifteen consecutive ones, the station goes into an IDLE state.

Frames

A single communication element is called a FRAME which can be used for both Link Control and data transfer purposes. The elements of a frame are the beginning eight bit FLAG (F) consisting of one zero, six ones, and a zero, an eight bit ADDRESS FIELD (A), an eight bit CONTROL FIELD (C), a variable (N-bit) INFORMATION FIELD (I), a sixteen bit FRAME CHECK SEQUENCE (FCS), and an eight bit end FLAG (F), having the same bit pattern as the beginning flag. In HDLC the Address (A) and Control (C) bytes are extendable. The HDLC and the SDLC use three types of frames; an Information Frame is used to transfer data, a Supervisory Frame is used for control purposes, and a Non-sequenced Frame is used for initialization and control of the secondary stations.

Frame Characteristics

An important characteristic of a frame is that its contents are made code transparent by use of a zero bit insertion and deletion technique. Thus, the user can adopt any format or code suitable for his system — it may even be a computer word length or a "memory dump". The frame is bit oriented that is, bits, not characters in each field, have specific meanings. The Frame Check Sequence (FCS) is an error detection scheme similar to the Cyclic Redundancy Checkword (CRC) widely used in magnetic disk storage devices. The Command and Response information frames contain sequence numbers in the control fields identifying the sent and received frames. The sequence numbers are used in Error Recovery Procedures (ERP) and as implicit acknowledgement of frame communication, enhancing the true full-duplex nature of the HDLC/SDLC protocols.

In contrast, BISYNC is basically half-duplex (two way alternate) because of necessity to transmit immediate acknowledgement frames. HDLC/SDLC therefore saves propagation delay times and have a potential of twice the throughput rate of BISYNC.

It is possible to use HDLC or SDLC over half duplex lines but there is a corresponding loss in throughput because both are primarily designed for full-duplex communication. As in any synchronous system, the bit rate is determined by the clock bits supplied by the modem, protocols themselves are speed independent.

A byproduct of the use of zero-bit insertion-deletion technique is the non-return-to-zero invert (NRZI) data transmission/reception compatibility. The latter allows HDLC/SDLC protocols to be used with asynchronous data communication hardware in which the clocks are derived from the NRZI encoded data.

References

IBM Synchronous Data Link Control General Information, IBM, GA27-3093-1.
Standard Network Access Protocol Specification, DATAPAC, Trans-Canada Telephone System CCG111
Recommendation X.25, ISO/CCITT March 2, 1976.
IBM 3650 Retail Store System Loop Interface OEM Information, IBM, GA 27-3098-0
Guidebook to Data Communications, Training Manual, Hewlett-Packard 5955-1715
IBM Introduction to Teleprocessing, IBM, GC 20-8095-02
System Network Architecture, Technical Overview, IBM, GA 27-3102
System Network Architecture Format and Protocol, IBM GA 27-3112

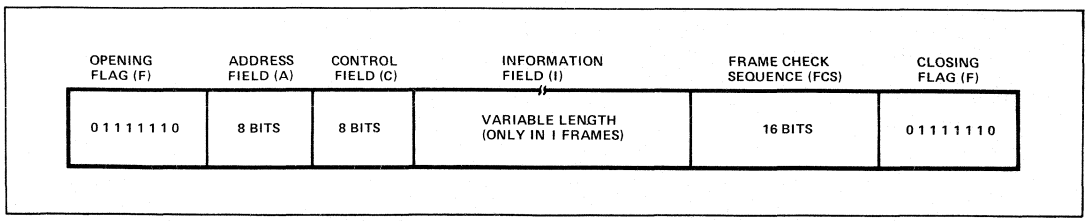

Figure 3. Frame Format

Table 1. Pin Description

Symbol	Pin No.	Type	Name and Function
V_{CC}	40		**Power Supply:** +5V Supply.
GND	20		**Ground:** Ground.
RESET	4	I	**Reset:** A high signal on this pin will force the 8273 to an idle state. The 8273 will remain idle until a command is issued by the CPU. The modem interface output signals are forced high. Reset must be true for a minimum of 10 TCY.
$\overline{CS}$	24	I	**Chip Select:** The RD and WR inputs are enabled by the chip select input.
DB_7-DB_0	19-12	I/O	**Data Bus:** The Data Bus lines are bi-directional three-state lines which interface with the system Data Bus.
$\overline{WR}$	10	I	**Write Input:** The Write signal is used to control the transfer of either a command or data from CPU to the 8273.
RD	9	I	**Read Input:** The Read signal is used to control the transfer of either a data byte or a status word from the 8273 to the CPU.
TxINT	2	O	**Transmitter Interrupt:** The Transmitter interrupt signal indicates that the transmitter logic requires service.
RxINT	11	O	**Receiver Interrupt:** The Receiver interrupt signal indicates that the Receiver logic requires service.
TxDRQ	6	O	**Transmitter Data Request:** Requests a transfer of data between memory and the 8273 for a transmit operation.
RxRDQ	8	O	**Receiver DMA Request:** Requests a transfer of data between the 8273 and memory for a receive operation.
$\overline{TxDACK}$	5	I	**Transmitter DMA Acknowledge:** The Transmitter DMA acknowledge signal notifies the 8273 that the TxDMA cycle has been granted.
$\overline{RxDACK}$	7	I	**Receiver DMA Acknowledge:** The Receiver DMA acknowledge signal notifies the 8273 that the RxDMA cycle has been granted.
A_1-A_0	22-21	I	**Address:** These two lines are CPU Interface Register Select lines.
TxD	29	O	**Transmitter Data:** This line transmits the serial data to the communication channel.
$\overline{TxC}$	28	I	**Transmitter Clock:** The transmitter clock is used to synchronize the transmit data.
RxD	26	I	**Receiver Data:** This line receives serial data from the communication channel.
$\overline{RxC}$	27	I	**Receiver Clock:** The Receiver Clock is used to synchronize the receive data.
$\overline{32X\ CLK}$	25	I	**32X Clock:** The 32X clock is used to provide clock recovery when an asynchronous modem is used. In loop configuration the loop station can run without an accurate 1X clock by using the 32X CLK in conjunction with the DPLL output. (This pin must be grounded when not used.)
$\overline{DPLL}$	23	O	**Digital Phase Locked Loop:** Digital Phase Locked Loop output can be tied to RxC and/or TxC when 1X clock is not available. DPLL is used with 32X CLK.
$\overline{FLAG\ DET}$	1	O	**Flag Detect:** Flag Detect signals that a flag (01111110) has been received by an active receiver.
$\overline{RTS}$	35	O	**Request to Send:** Request to Send signals that the 8273 is ready to transmit data.
$\overline{CTS}$	30	I	**Clear to Send:** Clear to Send signals that the modem is ready to accept data from the 8273.
$\overline{CD}$	31	I	**Carrier Detect:** Carrier Detect signals that the line transmission has started and the 8273 may begin to sample data on RxD line.
$\overline{PA_{2\text{-}4}}$	32-34	I	**General purpose input ports:** The logic levels on these lines can be Read by the CPU through the Data Bus Buffer.
$\overline{PB_{1\text{-}4}}$	36-39	O	**General purpose output ports:** The CPU can write these output lines through Data Bus Buffer.
CLK	3	I	**Clock:** A square wave TTL clock.

FUNCTIONAL DESCRIPTION

General

The Intel® 8273 HDLC/SDLC controller is a microcomputer peripheral device which supports the International Standards Organization (ISO) High Level Data Link Control (HDLC), and IBM Synchronous Data Link Control (SDLC) communications protocols. This controller minimizes CPU software by supporting a comprehensive frame-level instruction set and by hardware implementation of the low level tasks associated with frame assembly/disassembly and data integrity. The 8273 can be used in either synchronous or asynchronous applications.

In asynchronous applications the data can be programmed to be encoded/decoded in NRZI code. The clock is derived from the NRZI data using a digital phase locked loop. The data transparency is achieved by using a zero-bit insertion/deletion technique. The frames are automatically checked for errors during reception by verifying the Frame Check Sequence (FCS); the FCS is automatically generated and appended before the final flag in transmit.

The 8273 recognizes and can generate flags (01111110), Abort, Idle, and GA (EOP) characters.

The 8273 can assume either a primary (control) or a secondary (slave) role. It can therefore be readily implemented in an SDLC loop configuration as typified by the IBM 3650 Retail Store System by programming the 8273 into a one-bit delay mode. In such a configuration, a two wire pair can be effectively used for data transfer between controllers and loop stations. The digital phase locked loop output pin can be used by the loop station without the presence of an accurate Tx clock.

CPU Interface

The CPU interface is optimized for the MCS-80/85™ bus with an 8257 DMA controller. However, the interface is flexible, and allows either DMA or non-DMA data transfers, interrupt or non-interrupt driven. It further allows maximum line utilization by providing early interrupt mechanism for buffered (only the information field can be transferred to memory) Tx command overlapping. It also provides separate Rx and Tx interrupt output channels for efficient operation. The 8273 keeps the interrupt request active until all the associated interrupt results have been read.

The CPU utilizes the CPU interface to specify commands and transfer data. It consists of seven registers addressed via $\overline{CS}$, A_1, A_0, $\overline{RD}$ and $\overline{WR}$ signals and two independent data registers for receive data and transmit data. A_1, A_0 are generally derived from two low order bits of the address bus. If an 8080 based CPU is utilized, the $\overline{RD}$ and $\overline{WR}$ signals may be driven by the 8228 $\overline{I/OR}$ and $\overline{I/OW}$. The table shows the seven register select decoding:

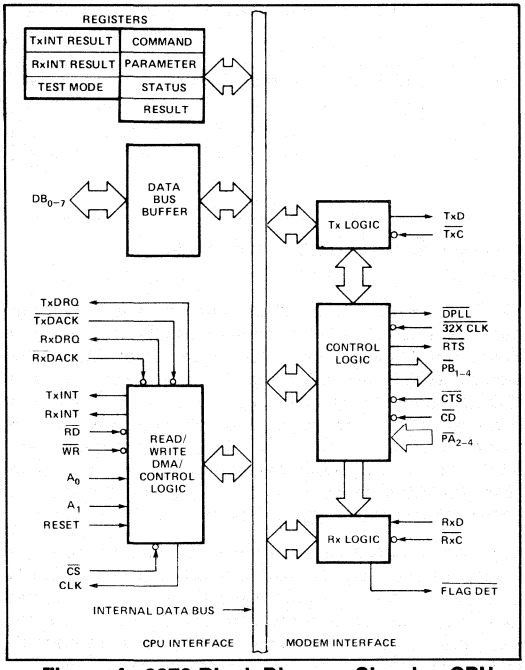

Figure 4. 8273 Block Diagram Showing CPU Interface Functions

A_1	A_0	$\overline{TxDACK}$	$\overline{RxDACK}$	$\overline{CS}$	$\overline{RD}$	$\overline{WR}$	Register
0	0	1	1	0	1	0	Command
0	0	1	1	0	0	1	Status
0	1	1	1	0	1	0	Parameter
0	1	1	1	0	0	1	Result
1	0	1	1	0	1	0	Reset
1	0	1	1	0	0	1	TxINT Result
1	1	1	1	0	1	0	—
1	1	1	1	0	0	1	RxINT Result
X	X	0	1	1	1	0	Transmit Data
X	X	1	0	1	0	1	Receive Data

Register Description

Command

Operations are initiated by writing an appropriate command in the Command Register.

Parameter

Parameters of commands that require additional information are written to this register.

Result

Contains an immediate result describing an outcome of an executed command.

Transmit Interrupt Result

Contains the outcome of 8273 transmit operation (good/bad completion).

Receive Interrupt Result

Contains the outcome of 8273 receive operation (good/bad completion), followed by additional results which detail the reason for interrupt.

Status

The status register reflects the state of the 8273 CPU Interface.

DMA Data Transfers

The 8273 CPU interface supports two independent data interfaces: receive data and transmit data. At high data transmission speeds the data transfer rate of the 8273 is great enough to justify the use of direct memory access (DMA) for the data transfers. When the 8273 is configured in DMA mode, the elements of the DMA interfaces are:

TxDRQ: Transmit DMA Request

Requests a transfer of data between memory and the 8273 for a transmit operation.

$\overline{TxDACK}$: Transmit DMA Acknowledge

The $\overline{TxDACK}$ signal notifies the 8273 that a transmit DMA cycle has been granted. It is also used with $\overline{WR}$ to transfer data to the 8273 in non-DMA mode. Note: $\overline{RD}$ must not be asserted while TxDACK is active.

RxDRQ: Receive DMA Request

Requests a transfer of data between the 8273 and memory for a receive operation.

$\overline{\text{RxDACK}}$: Receive DMA Acknowledge

The $\overline{\text{RxDACK}}$ signal notifies the 8273 that a receive DMA cycle has been granted. It is also used with $\overline{\text{RD}}$ to read data from the 8273 in non-DMA mode. Note: $\overline{\text{WR}}$ must not be asserted while $\overline{\text{RxDACK}}$ is active.

$\overline{\text{RD}}$, $\overline{\text{WR}}$: Read, Write

The $\overline{\text{RD}}$ and $\overline{\text{WR}}$ signals are used to specify the direction of the data transfer.

DMA transfers require the use of a DMA controller such as the Intel 8257. The function of the DMA controller is to provide sequential addresses and timing for the transfer, at a starting address determined by the CPU. Counting of data block lengths is performed by the 8273.

To request a DMA transfer the 8273 raises the appropriate DMA REQUEST. DMA ACKNOWLEDGE and READ enables DMA data onto the bus (independently of CHIP SELECT). DMA ACKNOWLEDGE and WRITE transfers DMA data to the 8273 (independent of CHIP SELECT).

It is also possible to configure the 8273 in the non-DMA data transfer mode. In this mode the CPU module must pass data to the 8273 in response to non-DMA data requests indicated by the status word.

Modem Interface

The 8273 Modem interface provides both dedicated and user defined modem control functions. All the control signals are active low so that EIA RS-232C inverting drivers (MC 1488) and inverting receivers (MC 1489) may be used to interface to standard modems. For asynchronous operation, this interface supports programmable NRZI data encode/decode, a digital phase locked loop for efficient clock extraction from NRZI data, and modem control ports with automatic $\overline{\text{CTS}}$, $\overline{\text{CD}}$ monitoring and $\overline{\text{RTS}}$ generation. This interface also allows the 8273 to operate in PRE-FRAME SYNC mode in which the 8273 prefixes 16 transitions to a frame to synchronize idle lines before transmission of the first flag.

It should be noted that all the 8273 port operations deal with logical values, for instance, bit D0 of Port A will be a one when $\overline{\text{CTS}}$ (Pin 30) is a physical zero (logical one).

Port A — Input Port

During operation, the 8273 interrogates input pins $\overline{\text{CTS}}$ (Clear to Send) and $\overline{\text{CD}}$ (Carrier Detect). $\overline{\text{CTS}}$ is used to condition the start of a transmission. If during transmission $\overline{\text{CTS}}$ is lost the 8273 generates an interrupt. During reception, if $\overline{\text{CD}}$ is lost, the 8273 generates an interrupt.

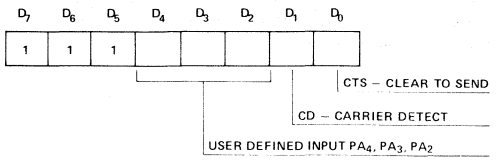

The user defined input bits correspond to the 8273 PA_4, PA_3 and PA_2 pins. The 8273 does not interrogate or manipulate these bits.

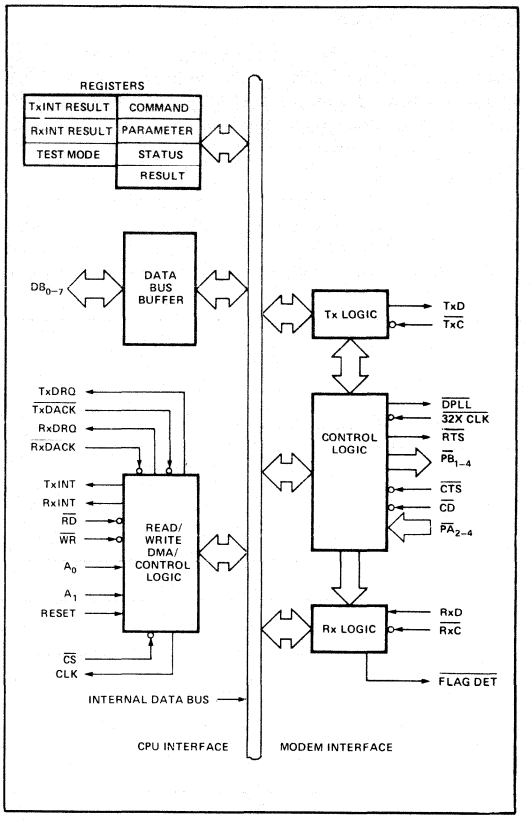

Figure 5. 8273 Block Diagram Showing Control Logic Functions

Port B - Output Port

During normal operation, if the CPU sets $\overline{\text{RTS}}$ active, the 8273 will not change this pin; however, if the CPU sets $\overline{\text{RTS}}$ inactive, the 8273 will activate it before each transmission and deactivate it one byte time after transmission. While the receiver is active the flag detect pin is pulsed each time a flag sequence is detected in the receive data stream. Following an 8273 reset, all pins of Port B are set to a high, inactive level.

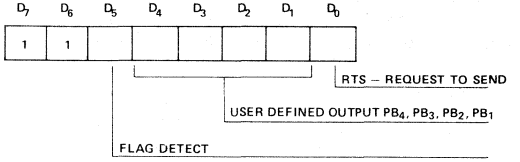

The user defined output bits correspond to the state of PB_4-PB_1 pins. The 8273 does not interrogate or manipulate these bits.

Serial Data Logic

The Serial data is synchronized by the user transmit ($\overline{TxC}$) and receive ($\overline{RxC}$) clocks. The leading edge of $\overline{TxC}$ generates new transmit data and the trailing edge of $\overline{RxC}$ is used to capture receive data. The NRZI encoding/decoding of the receive and transmit data is programmable.

The diagnostic features included in the Serial Data logic are programmable loop back of data and selectable clock for the receiver. In the loop-back mode, the data presented to the TxD pin is internally routed to the receive data input circuitry in place of the RxD pin, thus allowing a CPU to send a message to itself to verify operation of the 8273.

In the selectable clock diagnostic feature, when the data is looped back, the receiver may be presented incorrect sample timing by the external circuitry. The user may select to substitute the $\overline{TxC}$ pin for the $\overline{RxC}$ input on-chip so that the clock used to generate the loop back data is used to sample it. Since TxD is generated off the leading edge of $\overline{TxC}$ and RxD is sampled on the trailing edge, the selected clock allows bit synchronism.

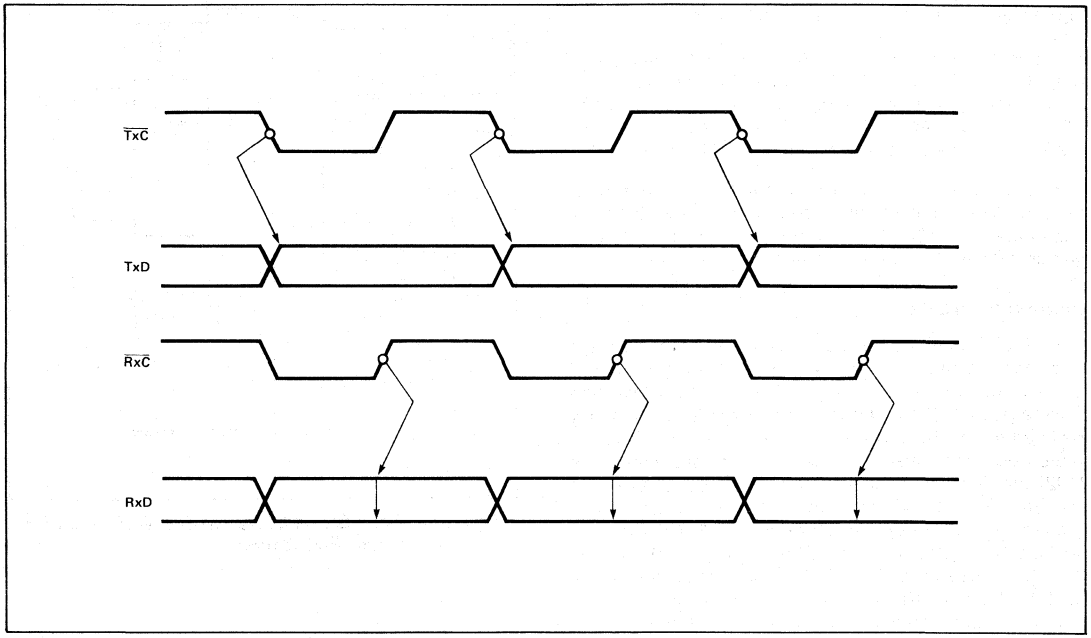

Figure 6. Transmit/Receive Timing

Asynchronous Mode Interface

Although the 8273 is fully compatible with the HDLC/SDLC communication line protocols, which are primarily designed for synchronous communication, the 8273 can also be used in asynchronous applications by using this interface. The interface employs a digital phase locked loop (DPLL) for clock recovery from a receive data stream and programmable NRZI encoding and decoding of data. The use of NRZI coding with SDLC transmission guarantees that within a frame, data transitions will occur at least every five bit times — the longest sequence of ones which may be transmitted without zero-bit insertion. The DPLL should be used only when NRZI coding is used since the NRZI coding will transmit zero sequence as line transitions. The digital phase locked loop also facilitates full-duplex and half-duplex asynchronous implementation with, or without modems.

Digital Phase Locked Loop

In asynchronous applications, the clock is derived from the receiver data stream by the use of the digital phase locked loop (DPLL). The DPLL requires a clock input at 32 times the required baud rate. The receive data (RxD) is sampled with this $\overline{32X\ CLK}$ and the 8273 DPLL supplies a sample pulse nominally centered on the RxD bit cells. The DPLL has a built-in "stiffness" which reduces sensitivity to line noise and bit distortion. This is accomplished by making phase error adjustments in discrete increments. Since the nominal pulse is made to occur at 32 counts of the $\overline{32X\ CLK}$, these counts are subtracted or added to the nominal, depending upon which quadrant of the four error quadrants the data edge occurs in. For example if an RxD edge is detected in quadrant A1, it is apparent that the $\overline{DPLL}$ sample "A" was placed too close to the trailing edge of the data cell; sample "B" will then be placed at T = ($T_{nominal}$ - 2 counts) = 30 counts of the $\overline{32X\ CLK}$ to move the sample pulse "B" toward the nominal center of the next bit cell. A data edge occuring in quadrant B1 would cause a smaller adjustment of phase with T = 31 counts of the $\overline{32X\ CLK}$. Using this technique the $\overline{DPLL}$ pulse will converge to nominal bit center within 12 data bit times, worst case, with constant incoming RxD edges.

A method of attaining bit synchronism following a line idle is to use PRE-FRAME SYNC mode of transmission.

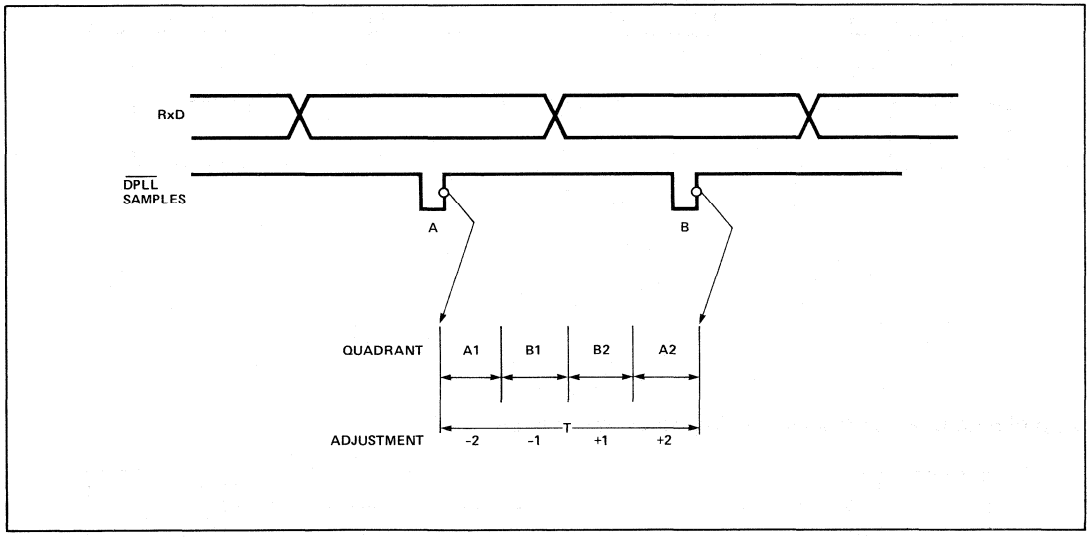

Figure 7. DPLL Sample Timing

Synchronous Modem — Duplex or Half Duplex Operation

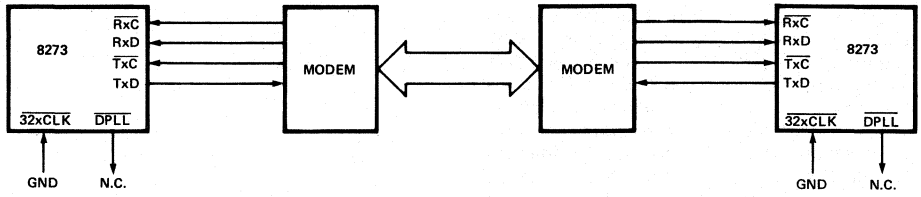

Asynchronous Modems — Duplex or Half Duplex Operation

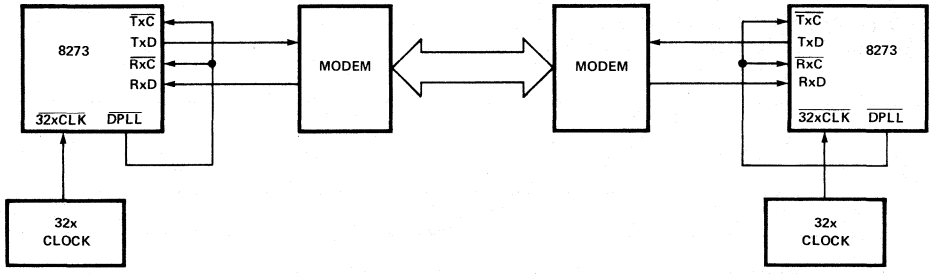

Asynchronous — No Modems — Duplex or Half Duplex

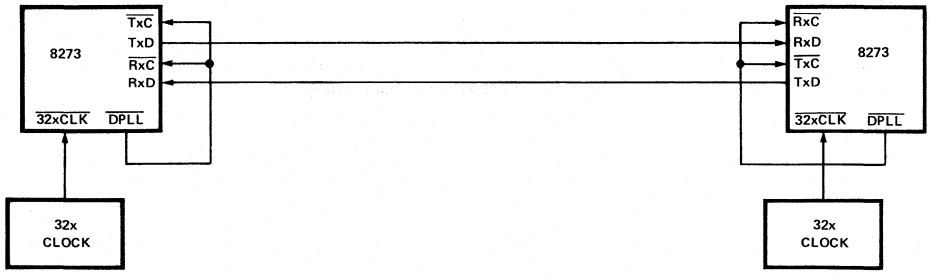

SDLC Loop

The DPLL simplifies the SDLC loop station implementation. In this application, each secondary station on a loop data link is a repeater set in one-bit delay mode. The signals sent out on the loop by the loop controller (primary station) are relayed from station to station then, back to the controller. Any secondary station finding its address in the A field captures the frame for action at that station. All received frames are relayed to the next station on the loop.

Loop stations are required to derive bit timing from the incoming NRZI data stream. The DPLL generates sample Rx clock timing for reception and uses the same clock to implement Tx clock timing.

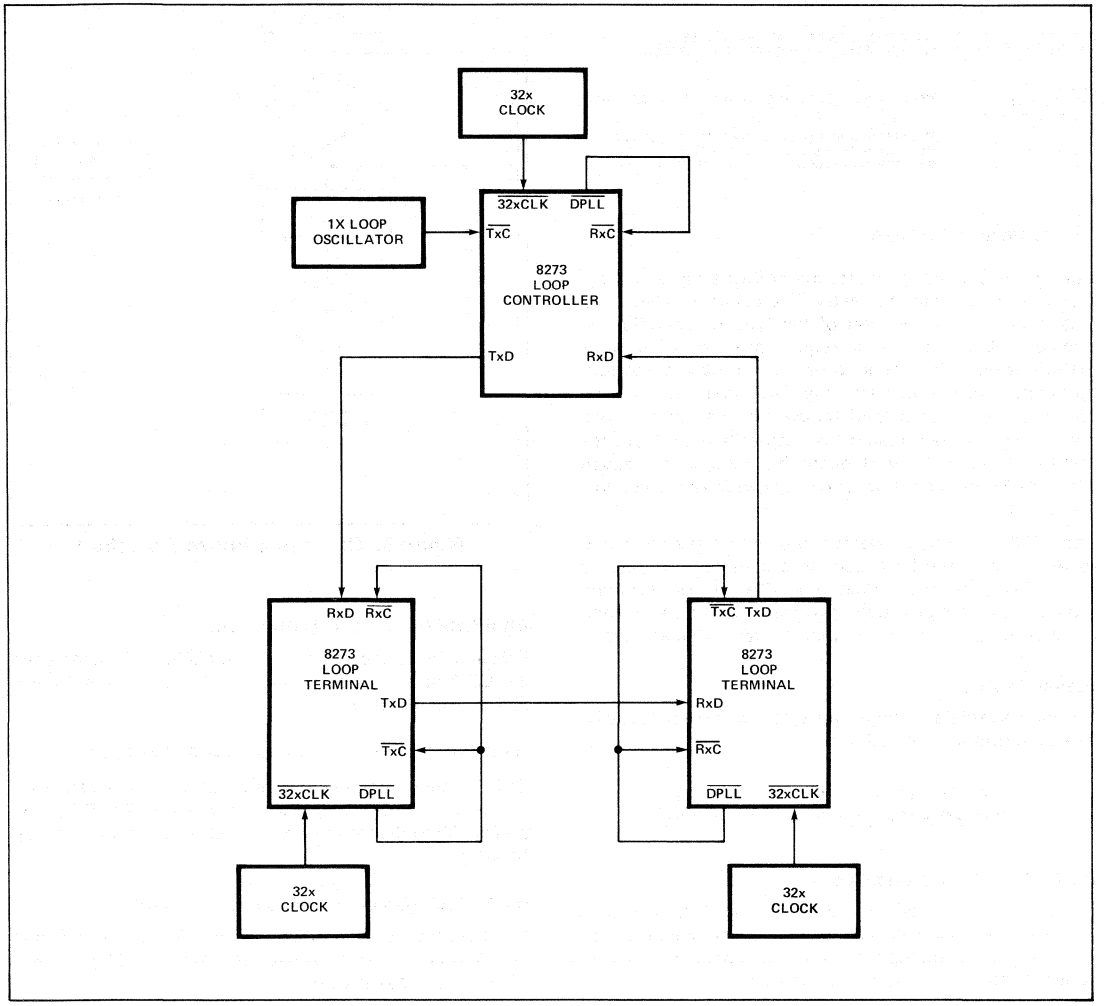

Figure 8. SDLC Loop Application

PRINCIPLES OF OPERATION

The 8273 is an intelligent peripheral controller which relieves the CPU of many of the rote tasks associated with constructing and receiving frames. It is fully compatible with the MCS-80/85™ system bus. As a peripheral device, it accepts commands from a CPU, executes these commands and provides an Interrupt and Result back to the CPU at the end of the execution. The communication with the CPU is done by activation of $\overline{CS}$, $\overline{RD}$, $\overline{WR}$ pins, while the A_1, A_0 select the appropriate registers on the chip as described in the Hardware Description Section.

The 8273 operation is composed of the following sequence of events:

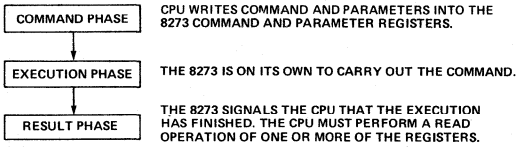

The Command Phase

During the command phase, the software writes a command to the command register. The command bytes provide a general description of the type of operation requested. Many commands require more detailed information about the command. In such a case up to four parameters are written into the parameter register. The flowchart of the command phase indicates that a command may not be issued if the Status Register indicates that the device is busy. Similarly if a parameter is issued when the Parameter Buffer shows full, incorrect operation will occur.

The 8273 is a duplex device and both transmitter and receiver may each be executing a command or passing results at any given time. For this reason separate interrupt pins are provided. However, the command register must be used for one command sequence at a time.

Status Register

The status register contains the status of the 8273 activity. The description is as follows.

D_7	D_6	D_5	D_4	D_3	D_2	D_1	D_0
CBSY	CBF	CPBF	CRBF	RxINT	TxINT	RxIRA	TxIRA

Bit 7 CBSY (Command Busy)

Indicates in-progress command, set for CPU poll when Command Register is full, reset upon command phase completion. It is improper to write a command when CBSY is set; it results in incorrect operation.

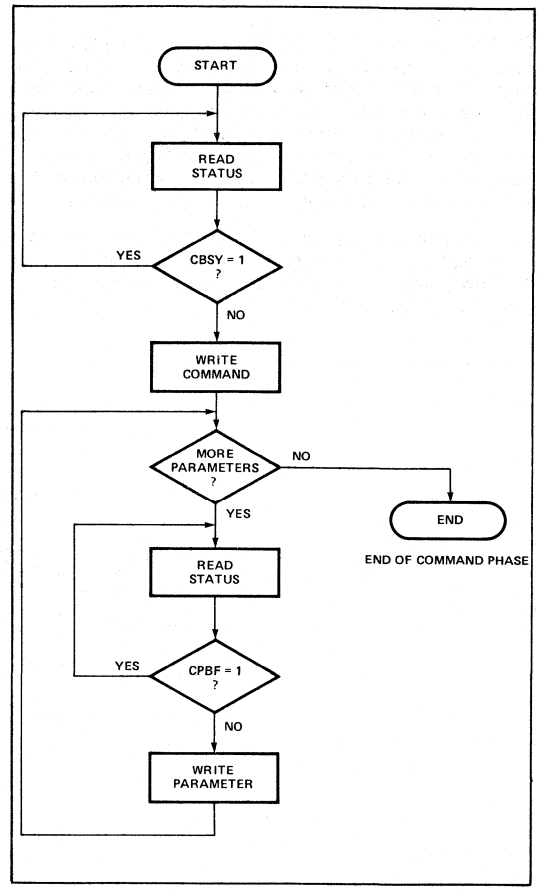

Figure 9. Command Phase Flowchart

Bit 6 CBF (Command Buffer Full)

Indicates that the command register is full, it is reset when the 8273 accepts the command byte but does not imply that execution has begun.

Bit 5 CPBF (Command Parameter Buffer Full)

CPBF is set when the parameter buffer is full, and is reset by the 8273 when it accepts the parameter. The CPU may poll CPBF to determine when additional parameters may be written.

Bit 4 CRBF (Command Result Buffer Full)

Indicates that an executed command immediate result is present in the Result Register. It is set by 8273 and reset when CPU reads the result.

Bit 3 RxINT (Receiver Interrupt)

RxINT indicates that the receiver requires CPU attention. It is identical to RxINT (pin 11) and is set by the 8273 either upon good/bad completion of a specified command or by Non-DMA data transfer. It is reset only after the CPU has read the result byte or has received a data byte from the 8273 in a Non-DMA data transfer.

Bit 2 TxINT (Transmitter Interrupt)

The TxINT indicates that the transmitter requires CPU attention. It is identical to TxINT (pin 2). It is set by 8273 either upon good/bad completion of a specified command or by Non-DMA data transfer. It is reset only after the CPU has read the result byte or has transferred transmit data byte to the 8273 in a Non-DMA transfer.

Bit 1 RxIRA (Receiver Interrupt Result Available)

The RxIRA is set by the 8273 when an interrupt result byte is placed in the RxINT register. It is reset after the CPU has read the RxINT register.

Bit 0 TxIRA (Transmitter Interrupt Result Available)

The TxIRA is set by the 8273 when an interrupt result byte is placed in the TxINT register. It is reset when the CPU has read the TxINT register.

The Execution Phase

Upon accepting the last parameter, the 8273 enters into the Execution Phase. The execution phase may consist of a DMA or other activity, and may or may not require CPU intervention. The CPU intervention is eliminated in this phase if the system utilizes DMA for the data transfers, otherwise, for non-DMA data transfers, the CPU is interrupted by the 8273 via TxINT and RxINT pins, for each data byte request.

The Result Phase

During the result phase, the 8273 notifies the CPU of the execution outcome of a command. This phase is initiated by:

1. The successful completion of an operation
2. An error detected during an operation.

To facilitate quick network software decisions, two types of execution results are provided:

1. An Immediate Result
2. A Non-Immediate Result

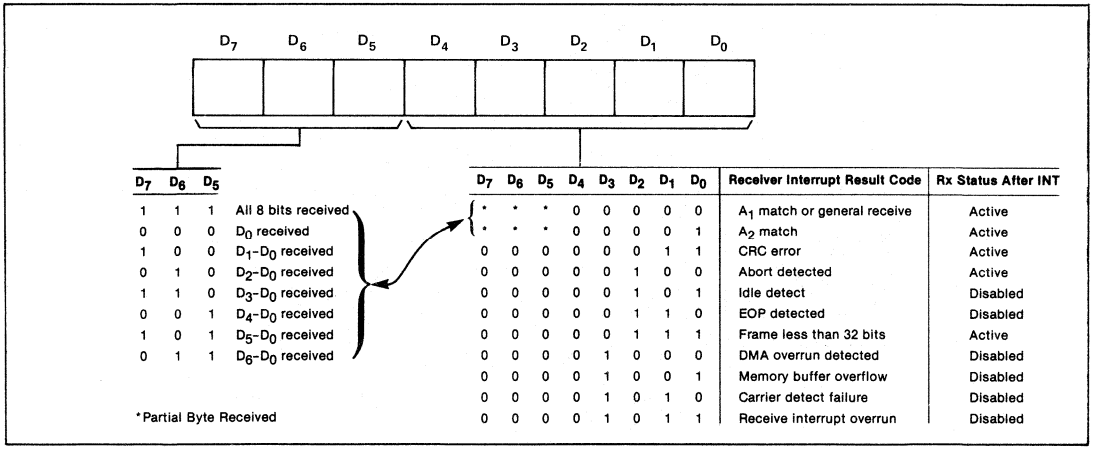

Figure 10. Rx Interrupt Result Byte Format

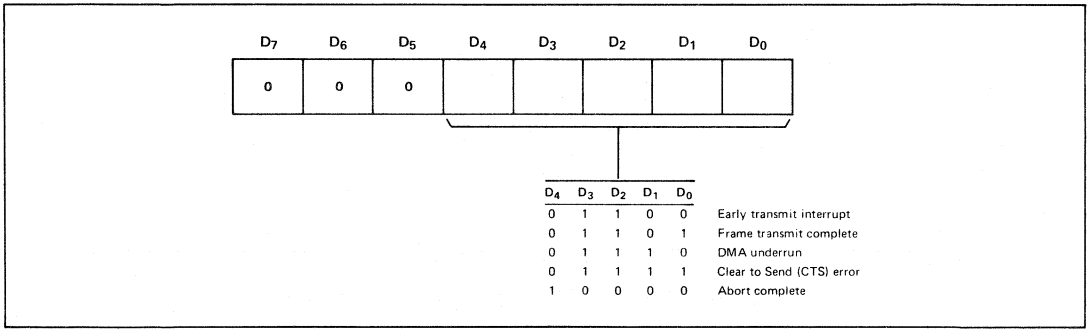

Figure 11. Tx Interrupt Result Byte Format

Immediate result is provided by the 8273 for commands such as Read Port A and Read Port B which have information ($\overline{CTS}$, $\overline{CD}$, $\overline{RTS}$, etc.) that the network software needs to make quick operational decisions.

A command which cannot provide an immediate result will generate an interrupt to signal the beginning of the Result phase. The immediate results are provided in the Result Register; all non-immediate results are available upon device interrupt, through Tx Interrupt Result Register TxI/R or Rx Interrupt Result Register RxI/R. The result may consist of a one-byte interrupt code indicating the condition for the interrupt and, if required, one or more bytes which detail the condition.

Tx and Rx Interrupt Result Registers

The Result Registers have a result code, the three high order bits D_7-D_5 of which are set to zero for all but the receive command. This command result contains a count that indicates the number of bits received in the last byte. If a partial byte is received, the high order bits of the last data byte are indeterminate.

All results indicated in the command summary must be read during the result phase.

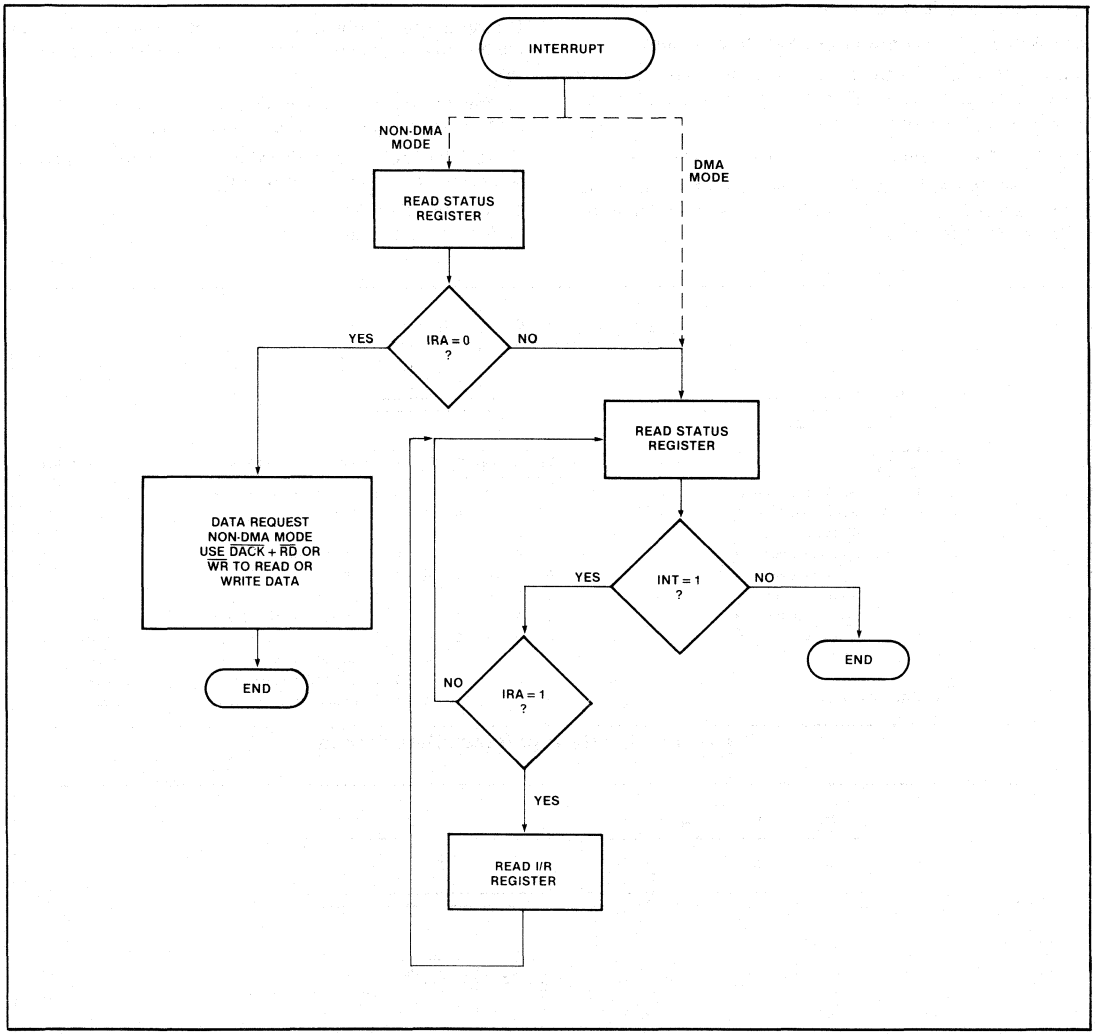

Figure 12. Result Phase Flowchart—Interrupt Results

IMMEDIATE RESULTS

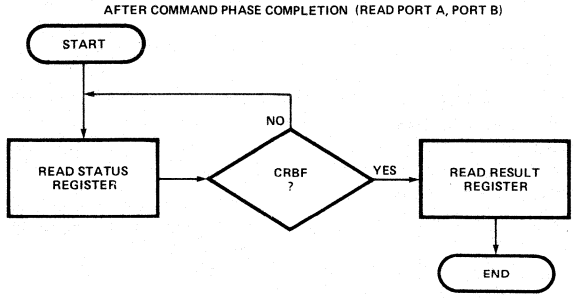

Figure 13. (Rx Interrupt Service)

DETAILED COMMAND DESCRIPTION

General

The 8273 HDLC/SDLC controller supports a comprehensive set of high level commands which allows the 8273 to be readily used in full-duplex, half-duplex, synchronous, asynchronous and SDLC loop configuration, with or without modems. These frame-level commands minimize CPU and software overhead. The 8273 has address and control byte buffers which allow the receive and transmit commands to be used in buffered or non-buffered modes.

In buffered transmit mode, the 8273 transmits a flag automatically, reads the Address and Control buffer registers and transmits the fields, then via DMA, it fetches the information field. The 8273, having transmitted the information field, automatically appends the Frame Check Sequence (FCS) and the end flag. Correspondingly, in buffered read mode, the Address and Control fields are stored in their respective buffer registers and only Information Field is transferred to memory.

In non-buffered transmit mode, the 8273 transmits the beginning flag automatically, then fetches and transmits the Address, Control and Information fields from the memory, appends the FCS character and an end flag. In the non-buffered receive mode the entire contents of a frame are sent to memory with the exception of the flags and FCS.

HDLC Implementation

HDLC Address and Control field are extendable. The extension is selected by setting the low order bit of the field to be extended to a one, a zero in the low order bit indicates the last byte of the respective field.

Since Address/Control field extension is normally done with software to maximize extension flexibility, the 8273 does not create or operate upon contents of the extended HDLC Address/Control fields. Extended fields are transparently passed by the 8273 to user as either interrupt results or data transfer requests. Software must assemble the fields for transmission and interrogate them upon reception.

However, the user can take advantage of the powerful 8273 commands to minimize CPU/Software overhead and simplify buffer management in handling extended fields. For instance buffered mode can be used to separate the first two bytes, then interrogate the others from buffer. Buffered mode is perfect for a two byte address field.

The 8273 when programmed, recognizes protocol characters unique to HDLC such as Abort, which is a string of seven or more ones (01111111). Since Abort character is the same as the GA (EOP) character used in SDLC Loop applications, Loop Transmit and Receive commands are not recommended to be used in HDLC. HDLC does not support Loop mode.

Initialization Set/Reset Commands

These commands are used to manipulate data within the 8273 registers. The Set commands have a single parameter which is a mask that corresponds to the bits to be set. (They perform a logical-OR of the specified register with the mask provided as a parameter). The Register commands have a single parameter which is a mask that has a zero in the bit positions that are to be reset. (They perform a logical-AND of the specified register with the mask).

Set One-Bit Delay (CMD Code A4)

	A_1	A_0	D_7	D_6	D_5	D_4	D_3	D_2	D_1	D_0
CMD:	0	0	1	0	1	0	0	1	0	0
PAR:	0	1	1	0	0	0	0	0	0	0

When one bit delay is set, 8273 retransmits the received data stream one bit delayed. This mode is entered at a receiver character boundary, and should only be used by Loop Stations.

Reset One-Bit Delay (CMD Code 64)

	A_1	A_0	D_7	D_6	D_5	D_4	D_3	D_2	D_1	D_0
CMD:	0	0	0	1	1	0	0	1	0	0
PAR:	0	1	0	1	1	1	1	1	1	1

The 8273 stops the one bit delayed retransmission mode.

Set Data Transfer Mode (CMD Code 97)

	A_1	A_0	D_7	D_6	D_5	D_4	D_3	D_2	D_1	D_0
CMD:	0	0	1	0	0	1	0	1	1	1
PAR:	0	1	0	0	0	0	0	0	0	1

When the data transfer mode is set, the 8273 will interrupt when data bytes are required for transmission or are available from a receive. If a transmit interrupt occurs and the status indicates that there is no Transmit Result (TxIRA = 0), the interrupt is a transmit data request. If a receive interrupt occurs and the status indicates that there is no receive result (RxIRA = 0), the interrupt is a receive data request.

Reset Data Transfer Mode (CMD Code 57)

	A_1	A_0	D_7	D_6	D_5	D_4	D_3	D_2	D_1	D_0
CMD:	0	0	0	1	0	1	0	1	1	1
PAR:	0	1	1	1	1	1	1	1	1	0

If the Data Transfer Mode is reset, the 8273 data transfers are performed through the DMA requests without interrupting the CPU.

Set Operating Mode (CMD Code 91)

	A_1	A_0	D_7	D_6	D_5	D_4	D_3	D_2	D_1	D_0
CMD:	0	0	1	0	0	1	0	0	0	1
PAR:	0	1	0	0						

1 = FLAG STREAM MODE
1 = PREFRAME SYNC MODE
1 = BUFFERED MODE
1 = EARLY INTERRUPT MODE
1 = EOP INTERRUPT MODE
1 = HDLC MODE

Reset Operating Mode (CMD Code 51)

	A_1	A_0	D_7	D_6	D_5	D_4	D_3	D_2	D_1	D_0
CMD:	0	0	0	1	0	1	0	0	0	1
PAR:	0	1	1	1						

Any mode switches set in CMD code 91 can be reset using this command by placing zeros in the appropriate positions.

(D5) HDLC Mode

In HDLC mode, a bit sequence of seven ones (01111111) is interpreted as an abort character. Otherwise, eight ones (011111111) signal an abort.

(D4) EOP Interrupt Mode

In EOP interrupt mode, an interrupt is generated whenever an EOP character (01111111) is detected by an active receiver. This mode is useful for the implementation of an SDLC loop controller in detecting the end of a message stream after a loop poll.

(D3) Transmitter Early Interrupt Mode (Tx)

The early interrupt mode is specified to indicate when the 8273 should generate an end of frame interrupt. When set, an early interrupt is generated when the last data character has been passed to the 8273. If the user software responds with another transmit command before the final flag is sent, the final flag interrupt will not be generated and a new frame will immediately begin when the current frame is complete. This permits frames to be separated by a single flag. If no additional Tx commands are provided, a final interrupt will follow.

Note: In buffered mode, if a supervisory frame (no Information) Transmit command is sent in response to an early Transmit Interrupt, the 8273 will repeatedly transmit the same supervisory frame with one flag in between, until a non-supervisory transmit is issued.

Early transmitter interrupt can be used in buffered mode by waiting for a transmit complete interrupt instead of early Transmit Interrupt before issuing a transmit frame command for a supervisory frame. See Figure 14.

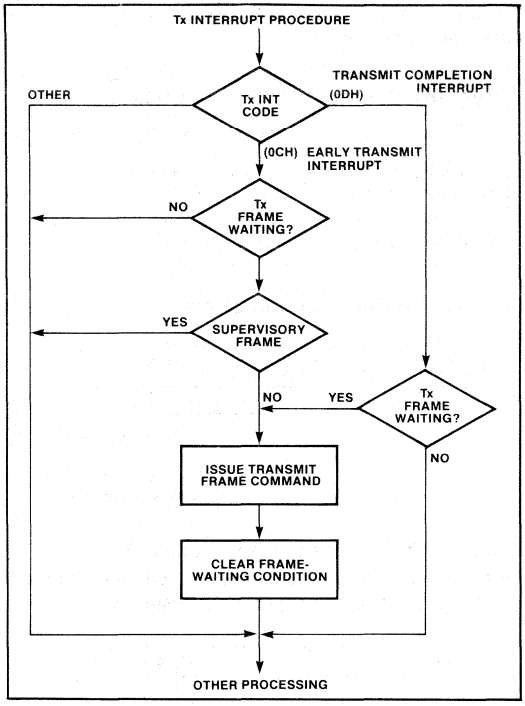

Figure 14.

If this bit is zero, the interrupt will be generated only after the final flag has been transmitted.

(D2) Buffered Mode

If the buffered mode bit is set to a one, the first two bytes (normally the address (A) and control (C) fields) of a frame are buffered by the 8273. If this bit is a zero the address and control fields are passed to and from memory.

(D1) Preframe Sync Mode

If this bit is set to a one the 8273 will transmit two characters before the first flag of a frame.
To guarantee sixteen line transitions, the 8273 sends two bytes of data $(00)_H$ if NRZI is set or data $(55)_H$ if NRZI is not set.

(D0) Flag Stream Mode

If this bit is set to a one, the following table outlines the operation of the transmitter.

TRANSMITTER STATE	ACTION
Idle	Send Flags immediately.
Transmit or Transmit-Transparent Active	Send Flags after the transmission complete
Loop Transmit Active	Ignore command.
1 Bit Delay Active	Ignore command.

If this bit is reset to zero the following table outlines the operation of the transmitter.

TRANSMITTER STATE	ACTION
IDLE	Send Idles on next character boundary.
Transmit or Transmit-Transparent Active	Send Idles after the transmission is complete.
Loop Transmit Active	Ignore command.
1 Bit Delay Active	Ignore command.

Set Serial I/O Mode (CMD Code A0)

	A_1	A_0	D_7	D_6	D_5	D_4	D_3	D_2	D_1	D_0
CMD:	0	0	1	0	1	0	0	0	0	0
PAR:	0	1	0	0	0	0	0			

D_0 = 1 = NRZ1 MODE
D_1 = 1 = TxC → RxC
D_2 = 1 = LOOP BACK TxD → RxD

Reset Serial I/O Mode (CMD Code 60)

This command allows bits set in CMD code A0 to be reset by placing zeros in the appropriate positions.

	A_1	A_0	D_7	D_6	D_5	D_4	D_3	D_2	D_1	D_0
CMD:	0	0	0	1	1	0	0	0	0	0
PAR:	0	1	1	1	1	1	1			

(D2) Loop Back

If this bit is set to a one, the transmit data is internally routed to the receive data circuitry.

(D1) TxC → RxC

If this bit is set to a one, the transmit clock is internally routed to the receive clock circuitry. It is normally used with the loop back bit (D2).

(D0) NRZI Mode

If this bit is set to a one, NRZI encoding and decoding of transmit and receive data is provided. If this bit is a zero, the transmit and receive data is treated as a normal positive logic bit stream.

NRZI encoding specifies that a zero causes a change in the polarity of the transmitted signal and a one causes no polarity change. NRZI is used in all asynchronous operations. Refer to IBM document GA27-3093 for details.

Reset Device Command

	A_1	A_0	D_7	D_6	D_5	D_4	D_3	D_2	D_1	D_0
TMR:	1	0	0	0	0	0	0	0	0	1
TMR:	1	0	0	0	0	0	0	0	0	0

An 8273 reset command is executed by outputing a $(01)_H$ followed by $(00)_H$ to the reset register (TMR). See 8273 AC timing characteristics for Reset pulse specifications.

The reset command emulates the action of the reset pin.

1. The modem control signals are forced high (inactive level).
2. The 8273 status register flags are cleared.
3. Any commands in progress are terminated immediately.
4. The 8273 enters an idle state until the next command is issued.
5. The Serial I/O and Operating Mode registers are set to zero and DMA data register transfer mode is selected.
6. The device assumes a non-loop SDLC terminal role.

Receive Commands

The 8273 supports three receive commands: General Receive, Selective Receive, and Selective Loop Receive.

General Receive (CMD Code C0)

General receive is a receive mode in which frames are received regardless of the contents of the address field.

	A_1	A_0	D_7	D_6	D_5	D_4	D_3	D_2	D_1	D_0
CMD:	0	0	1	1	0	0	0	0	0	0
PAR:	0	1	LEAST SIGNIFICANT BYTE OF THE RECEIVE BUFFER LENGTH (B0)							
PAR:	0	1	MOST SIGNIFICANT BYTE OF RECEIVE BUFFER LENGTH (B1)							

NOTES:

1. If buffered mode is specified, the R0, R1 receive frame length (result) is the number of data bytes received.
2. If non-buffered mode is specified, the R0, R1 receive frame length (result) is the number of data bytes received plus two (the count includes the address and control bytes).
3. The frame check sequence (FCS) is not transferred to memory.
4. Frames with less than 32 bits between flags are ignored (no interrupt generated) if the buffered mode is specified.
5. In the non-buffered mode an interrupt is generated when a less than 32 bit frame is received, since data transfer requests have occurred.
6. The 8273 receiver is always disabled when an Idle is received after a valid frame. The CPU module must issue a receive command to re-enable the receiver.
7. The intervening ABORT character between a final flag and an IDLE does not generate an interrupt.
8. If an ABORT Character is not preceded by a flag and is followed by an IDLE, an interrupt will be generated for the ABORT followed by an IDLE interrupt one character time later. The reception of an ABORT will disable the receiver.

Selective Receive (CMD Code C1)

	A_1	A_0	D_7	D_6	D_5	D_4	D_3	D_2	D_1	D_0
CMD:	0	0	1	1	0	0	0	0	0	1
PAR:	0	1	LEAST SIGNIFICANT BYTE OF THE RECEIVE BUFFER LENGTH (B0)							
PAR:	0	1	MOST SIGNIFICANT BYTE OF RECEIVE BUFFER LENGTH (B1)							
PAR:	0	1	RECEIVE FRAME ADDRESS MATCH FIELD ONE (A1)							
PAR:	0	1	RECEIVE FRAME ADDRESS MATCH FIELD TWO (A2)							

Selective receive is a receive mode in which frames are ignored unless the address field matches any one of two address fields given to the 8273 as parameters.

When selective receive is used in HDLC the 8273 looks at the first character, if extended, software must then decide if the message is for this unit.

Selective Loop Receive (CMD Code C2)

	A_1	A_0	D_7	D_6	D_5	D_4	D_3	D_2	D_1	D_0	
CMD:	0	0	1	1	0	0	0	0	1	0	
PAR:	0	0	LEAST SIGNIFICANT BYTE OF THE RECEIVE BUFFER LENGTH (B0)								
PAR:	0	1	MOST SIGNIFICANT BYTE OF RECEIVE BUFFER LENGTH (B1)								
PAR:	0	1	RECEIVE FRAME ADDRESS MATCH FIELD ONE (A1)								
PAR:	0	1	RECEIVE FRAME ADDRESS MATCH FIELD TWO (A2)								

Selective loop receive operates like selective receive except that the transmitter is placed in flag stream mode automatically after detecting an EOP (01111111) following a valid received frame. The one bit delay mode is also reset at the end of a selective loop receive.

Receive Disable (CMD Code C5)

Terminates an active receive command immediately.

	A_1	A_0	D_7	D_6	D_5	D_4	D_3	D_2	D_1	D_0
CMD:	0	0	1	1	0	0	0	1	0	1

PAR: NONE

Transmit Commands

The 8273 supports three transmit commands: Transmit Frame, Loop Transmit, Transmit Transparent.

Transmit Frame (CMD Code C8)

	A_1	A_0	D_7	D_6	D_5	D_4	D_3	D_2	D_1	D_0	
CMD:	0	0	1	1	0	0	1	0	0	0	
PAR:	0	1	LEAST SIGNIFICANT BYTE OF FRAME LENGTH (L0)								
PAR:	0	1	MOST SIGNIFICANT BYTE OF FRAME LENGTH (L1)								
PAR:	0	1	ADDRESS FIELD OF TRANSMIT FRAME (A)								
PAR:	0	1	CONTROL FIELD OF TRANSMIT FRAME (C)								

Transmits one frame including: initial flag, frame check sequence, and the final flag.

If the buffered mode is specified, the L0, L1, frame length provided as a parameter is the length of the information field and the address and control fields must be input.

In unbuffered mode the frame length provided must be the length of the information field plus two and the address and control fields must be the first two bytes of data. Thus only the frame length bytes are required as parameters.

Loop Transmit (CMD Code CA)

	A_1	A_0	D_7	D_6	D_5	D_4	D_3	D_2	D_1	D_0	
CMD:	0	0	1	1	0	0	1	0	1	0	
PAR:	0	1	LEAST SIGNIFICANT BYTE OF FRAME LENGTH (L0)								
PAR:	0	1	MOST SIGNIFICANT BYTE OF FRAME LENGTH (L1)								
PAR:	0	1	ADDRESS FIELD OF TRANSMIT FRAME (A)								
PAR:	0	1	CONTROL FIELD OF TRANSMIT FRAME (C)								

Transmits one frame in the same manner as the transmit frame command except:

1. If the flag stream mode is not active transmission will begin after a received EOP has been converted to a flag.
2. If the flag stream mode is active transmission will begin at the next flag boundary for buffered mode or at the third flag boundary for non-buffered mode.
3. At the end of a loop transmit the one-bit delay mode is entered and the flag stream mode is reset.

Transmit Transparent (CMD Coded C9)

	A_1	A_0	D_7	D_6	D_5	D_4	D_3	D_2	D_1	D_0	
CMD:	0	0	1	1	0	0	1	0	0	1	
PAR:	0	1	LEAST SIGNIFICANT BYTE OF FRAME LENGTH (L0)								
PAR:	0	1	MOST SIGNIFICANT BYTE OF FRAME LENGTH (L1)								

The 8273 will transmit a block of raw data without protocol, i.e., no zero bit insertion, flags, or frame check sequences.

Abort Transmit Commands

An abort command is supported for each type of transmit command. The abort commands are ignored if a transmit command is not in progress.

Abort Transmit Frame (CMD Code CC)

	A_1	A_0	D_7	D_6	D_5	D_4	D_3	D_2	D_1	D_0
CMD:	0	0	1	1	0	0	1	1	0	0

PAR: NONE

After an abort character (eight contiguous ones) is transmitted, the transmitter reverts to sending flags or idles as a function of the flag stream mode specified.

Abort Loop Transmit (CMD Code CE)

	A_1	A_0	D_7	D_6	D_5	D_4	D_3	D_2	D_1	D_0
CMD:	0	0	1	1	0	0	1	1	1	0

PAR: NONE

After a flag is transmitted the transmitter reverts to one bit delay mode.

Abort Transmit Transparent (CMD Code CD)

	A_1	A_0	D_7	D_6	D_5	D_4	D_3	D_2	D_1	D_0
CMD:	0	0	1	1	0	0	1	1	0	1

PAR: NONE

The transmitter reverts to sending flags or idles as a function of the flag stream mode specified.

Modem Control Commands

The modem control commands are used to manipulate the modem control ports.

When read Port A or Port B commands are executed the result of the command is returned in the result register. The Bit Set Port B command requires a parameter that is a mask that corresponds to the bits to be set. The Bit Reset Port B command requires a mask that has a zero in the bit positions that are to be reset.

Read Port A (CMD Code 22)

	A_1	A_0	D_7	D_6	D_5	D_4	D_3	D_2	D_1	D_0
CMD:	0	0	0	0	1	0	0	0	1	0

PAR: NONE

Read Port B (CMD Code 23)

	A_1	A_0	D_7	D_6	D_5	D_4	D_3	D_2	D_1	D_0
CMD:	0	0	0	0	1	0	0	0	1	1

PAR: NONE

Set Port B Bits (CMD Code A3)

This command allows user defined Port B pins to be set.

	A_1	A_0	D_7	D_6	D_5	D_4	D_3	D_2	D_1	D_0
CMD:	0	0	1	0	1	0	0	0	1	1
PAR:	0	1	0	0						

RTS – REQUEST TO SEND
USER DEFINED
FLAG DETECT

(D_5) Flag Detect

This bit can be used to set the flag detect pin. However, it will be reset when the next flag is detected.

(D_4-D_1) User Defined Outputs

These bits correspond to the state of the PB_4-PB_1 output pins.

(D_0) Request to Send

This is a dedicated 8273 modem control signal, and reflects the same logical state of RTS pin.

Reset Port B Bits (CMD Code 63)

This command allows Port B user defined bits to be reset.

	A_1	A_0	D_7	D_6	D_5	D_4	D_3	D_2	D_1	D_0
CMD:	0	0	0	1	1	0	0	0	1	1
PAR:	0	1	1	1						

RTS – REQUEST TO SEND
USER DEFINED
FLAG DETECT

This command allows Port B (D_4-D_1) user defined bits to be reset. These bits correspond to Output Port pins (PB_4-PB_1).

8273 Command Summary

Command Description	Command (HEX)	Parameter	Results	Result Port	Completion Interrupt
Set One Bit Delay	A4	Set Mask	None	—	No
Reset One Bit Delay	64	Reset Mask	None	—	No
Set Data Transfer Mode	97	Set Mask	None	—	No
Reset Data Transfer Mode	57	Reset Mask	None	—	No
Set Operating Mode	91	Set Mask	None	—	No
Reset Operating Mode	51	Reset Mask	None	—	No
Set Serial I/O Mode	A0	Set Mask	None	—	No
Reset Serial I/O Mode	60	Reset Mask	None	—	No
General Receive	C0	B0,B1	RIC,R0,R1,(A,C)[2]	RXI/R	Yes
Selective Receive	C1	B0,B1,A1,A2	RIC,R0,R1,(A,C)[2]	RXI/R	Yes
Selective Loop Receive	C2	B0,B1,A1,A2	RIC,R0,R1,(A,C)[2]	RXI/R	Yes
Receive Disable	C5	None	None	—	No
Transmit Frame	C8	L0,L1,(A,C)[1]	TIC	TXI/R	Yes
Loop Transmit	CA	L0,L1,(A,C)[1]	TIC	TXI/R	Yes
Transmit Transparent	C9	L0,L1	TIC	TXI/R	Yes
Abort Transmit Frame	CC	None	TIC	TXI/R	Yes
Abort Loop Transmit	CE	None	TIC	TXI/R	Yes
Abort Transmit Transparent	CD	None	TIC	TXI/R	Yes
Read Port A	22	None	Port Value	Result	No
Read Port B	23	None	Port Value	Result	No
Set Port B Bit	A3	Set Mask	None	—	No
Reset Port B Bit	63	Reset Mask	None	—	No

NOTES:
1. Issued only when in buffered mode.
2. Read as results only in buffered mode.

8273 Command Summary Key

B0 — Least significant byte of the receive buffer length.
B1 — Most significant byte of the receive buffer length.
L0 — Least significant byte of the Tx frame length.
L1 — Most significant byte of the Tx frame length.
A1 — Receive frame address match field one.
A2 — Receive frame address match field two.
A — Address field of received frame. If non-buffered mode is specified, this result is not provided.
C — Control field of received frame. If non-buffered mode is specified this result is not provided.
RXI/R — Receive interrupt result register.
TXI/R — Transmit interrupt result register.
R0 — Least significant byte of the length of the frame received.
R1 — Most significant byte of the length of the frame received.
RIC — Receiver interrupt result code.
TIC — Transmitter interrupt result code.

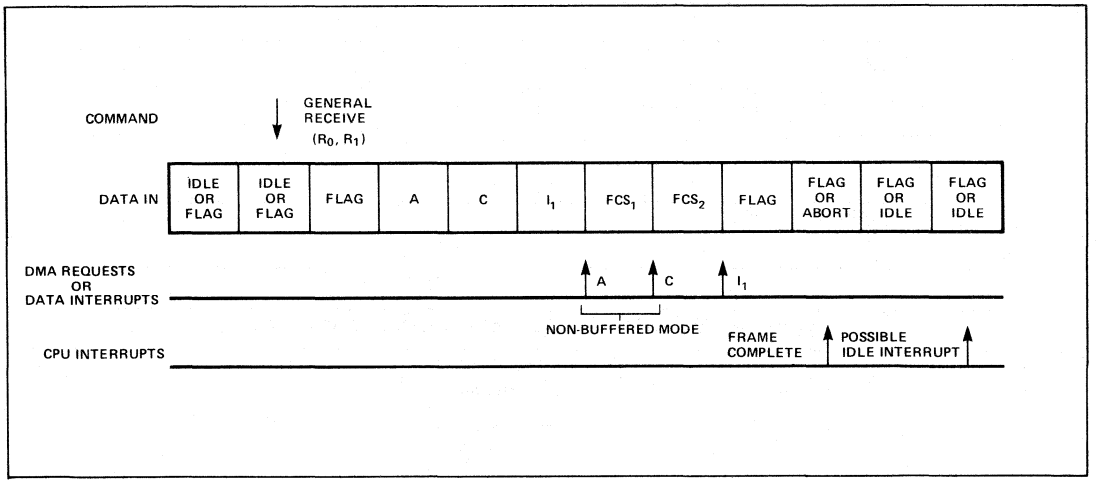

Figure 15. Typical Frame Reception

NOTE:
In order to ensure proper operation to the maximum baud rate, Receive commands or Read/Write Port commands should be written only when either the transmitter or the receiver is inactive. In full duplex systems, it is recommended that these commands be issued after servicing a transmitter interrupt but before a new transmit command is issued.

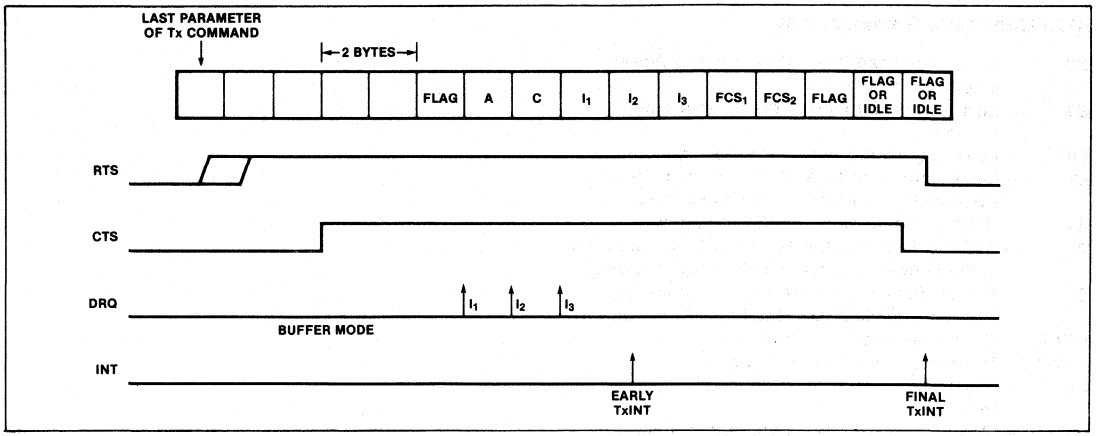

Figure 16a. Typical Frame Transmission, Buffered Mode

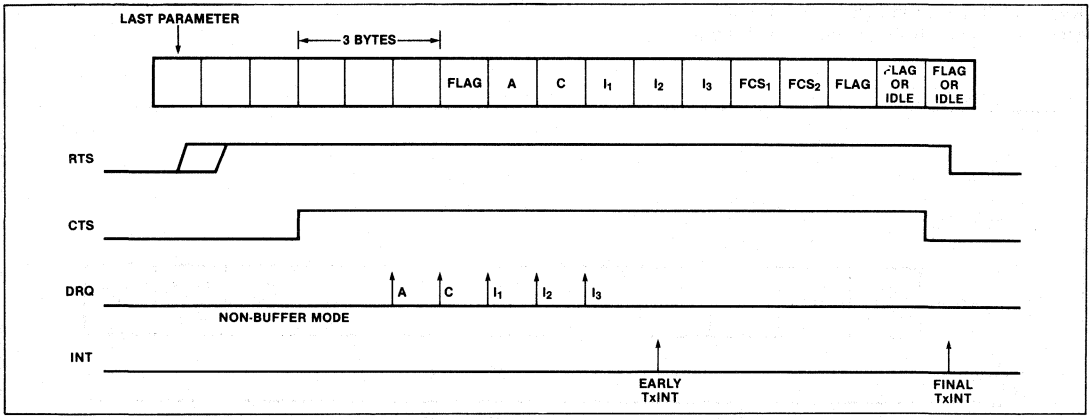

Figure 16b. Typical Frame Transmission, Non-Buffered Mode

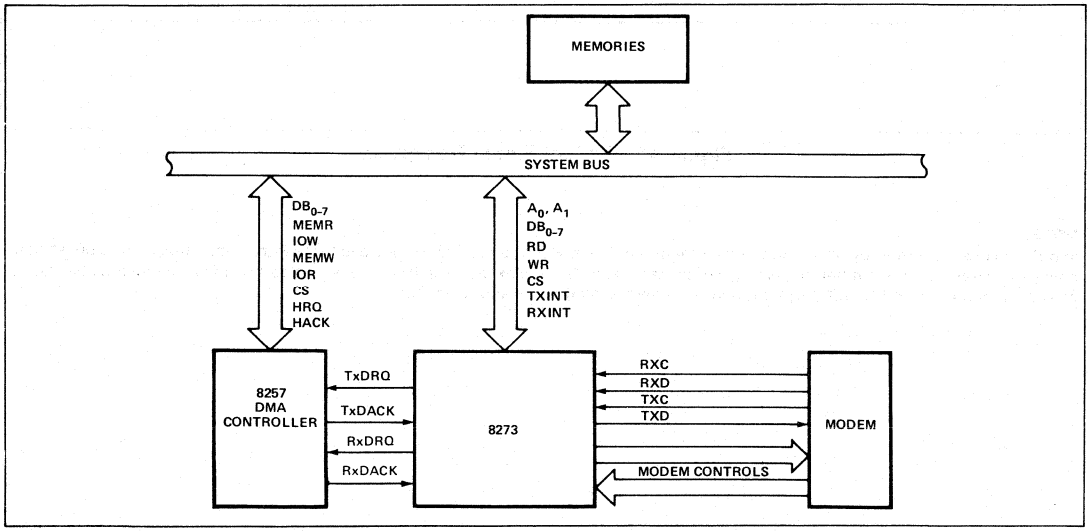

Figure 17. 8273 System Diagram

ABSOLUTE MAXIMUM RATINGS*

Ambient Temperature Under Bias ..... 0°C to 70°C
Storage Temperature ..... -65°C to +150°C
Voltage on Any Pin With Respect to Ground ..... -0.5V to +7V
Power Dissipation ..... 1 Watt

NOTICE: Stresses above those listed under "Absolute Maximum Ratings" may cause permanent damage to the device. This is a stress rating only and functional operation of the device at these or any other conditions above those indicated in the operational sections of this specification is not implied. Exposure to absolute maximum rating conditions for extended periods may affect device reliability.

D.C. CHARACTERISTICS (8273, 8273-4, 8273-8) ($T_A = 0°C$ to $70°C$, $V_{CC} = +5.0V \pm 5\%$)

Symbol	Parameter	Min.	Max.	Unit	Test Conditions
V_{IL}	Input Low Voltage	−0.5	0.8	V	
V_{IH}	Input High Voltage	2.0	$V_{CC}+0.5$	V	
V_{OL}	Output Low Voltage		0.45	V	$I_{OL} = 2.0$ mA for Data Bus Pins $I_{OL} = 1.0$ mA for Output Port Pins $I_{OL} = 1.6$ mA for All Other Pins
V_{OH}	Output High Voltage	2.4		V	$I_{OH} = -200\mu A$ for Data Bus Pins $I_{OH} = -100\mu A$ for All Other Pins
I_{IL}	Input Load Current		±10	μA	$V_{IN} = V_{CC}$ to 0V
I_{OFL}	Output Leakage Current		±10	μA	$V_{OUT} = V_{CC}$ to .45V
I_{CC}	V_{CC} Supply Current		180	mA	

CAPACITANCE (8273, 8273-4, 8273-8) ($T_A = 25°C$, $V_{CC} = GND = 0V$)

Symbol	Parameter	Min.	Typ.	Max.	Unit	Test Conditions
C_{IN}	Input Capacitance			10	pF	$t_c = 1$ MHz
$C_{I/O}$	I/O Capacitance			20	pF	Unmeasured Pins Returned to GND

A.C. CHARACTERISTICS ($T_A = 0°C$ to $70°C$, $V_{CC} = +5.0V \pm 5\%$)

CLOCK TIMING (8273)

Symbol	Parameter	Min.	Typ.	Max.	Unit	Test Conditions
t_{CY}	Clock	250		1000	ns	64K Baud Max Operating Rate
t_{CL}	Clock Low	120			ns	
t_{CH}	Clock High	120			ns	

CLOCK TIMING (8273-4)

Symbol	Parameter	Min.	Typ.	Max.	Unit	Test Conditions
t_{CY}	Clock	286		1000	ns	56K Baud Max Operating Rate
t_{CL}	Clock Low	135			ns	
t_{CH}	Clock High	135			ns	

CLOCK TIMING (8273-8)

Symbol	Parameter	Min.	Typ.	Max.	Unit	Test Conditions
t_{CY}	Clock	330		1000	ns	48K Baud Max Operating Rate
t_{CL}	Clock Low	150			ns	
t_{CH}	Clock High	150			ns	

A.C. CHARACTERISTICS (8273, 8273-4, 8273-8) (T_A = 0°C to 70°C, V_{CC} = +5.0V ±5%)

READ CYCLE

Symbol	Parameter	Min.	Max.	Unit	Test Conditions
t_{AC}	Select Setup to $\overline{RD}$	0		ns	Note 2
t_{CA}	Select Hold from $\overline{RD}$	0		ns	Note 2
t_{RR}	$\overline{RD}$ Pulse Width	250		ns	
t_{AD}	Data Delay from Address		300	ns	Note 2
t_{RD}	Data Delay from $\overline{RD}$		200	ns	C_L = 150 pF, Note 2
t_{DF}	Output Float Delay	20	100	ns	C_L = 20 pF for Minimum; 150 pF for Maximum
t_{DC}	DACK Setup to $\overline{RD}$	25		ns	
t_{CD}	DACK Hold from $\overline{RD}$	25		ns	
t_{KD}	Data Delay from DACK		300	ns	

WRITE CYCLE

Symbol	Parameter	Min.	Max.	Unit	Test Conditions
t_{AC}	Select Setup to $\overline{WR}$	0		ns	
t_{CA}	Select Hold from $\overline{WR}$	0		ns	
t_{WW}	$\overline{WR}$ Pulse Width	250		ns	
t_{DW}	Data Setup to $\overline{WR}$	150		ns	
t_{WD}	Data Hold from $\overline{WR}$	0		ns	
t_{DC}	DACK Setup to $\overline{WR}$	25		ns	
t_{CD}	DACK Hold from $\overline{WR}$	25		ns	

DMA

Symbol	Parameter	Min.	Max.	Unit	Test Conditions
t_{CQ}	Request Hold from $\overline{WR}$ or $\overline{RD}$ (for Non-Burst Mode)		200	ns	

OTHER TIMING

Symbol	Parameter	Min.	Max.	Unit	Test Conditions
t_{RSTW}	Reset Pulse Width	10		t_{CY}	
t_r	Input Signal Rise Time		20	ns	
t_f	Input Signal Fall Time		20	ns	
t_{RSTS}	Reset to First $\overline{IOWR}$	2		t_{CY}	
t_{CY32}	32X Clock Cycle Time	9.7 · t_{CY}		ns	
t_{CL32}	32X Clock Low Time	4 · t_{CY}		ns	
t_{CH32}	32X Clock High Time	4 · t_{CY}		ns	
t_{DPLL}	$\overline{DPLL}$ Output Low	1 · t_{CY} − 50		ns	
t_{DCL}	Data Clock Low	1 · t_{CY} − 50		ns	
t_{DCH}	Data Clock High	2 · t_{CY}		ns	
t_{DCY}	Data Clock	62.5 · t_{CY}		ns	Note 3
t_{TD}	Transmit Data Delay		200	ns	
t_{DS}	Data Setup Time	200		ns	
t_{DH}	Data Hold Time	100		ns	
t_{FLD}	$\overline{FLAG\ DET}$ Output Low	8 · t_{CY} ± 50		ns	

NOTES:

1. All timing measurements are made at the reference voltages unless otherwise specified: Input "1" at 2.0V, "0" at 0.8V; Output "1" at 2.0V, "0" at 0.8V.
2. t_{AD}, t_{RD}, t_{AC}, and t_{CA} are not concurrent specs.
3. If receive commands or Read/Write Port commands are issued while both the transmitter and receiver are active, this specification will be 81.5 T_{CY} min.

A.C. TESTING INPUT, OUTPUT WAVEFORM

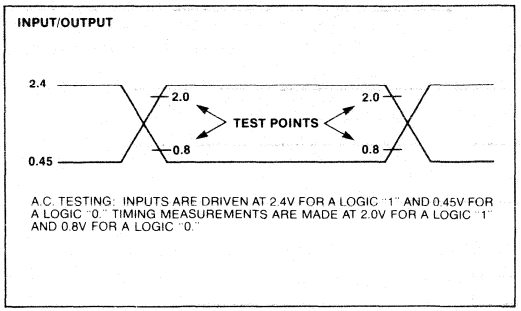

A.C. TESTING: INPUTS ARE DRIVEN AT 2.4V FOR A LOGIC "1" AND 0.45V FOR A LOGIC "0." TIMING MEASUREMENTS ARE MADE AT 2.0V FOR A LOGIC "1" AND 0.8V FOR A LOGIC "0."

A.C. TESTING LOAD CIRCUIT

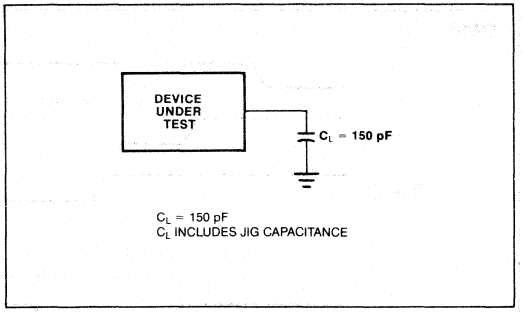

C_L = 150 pF
C_L INCLUDES JIG CAPACITANCE

WAVEFORMS

READ

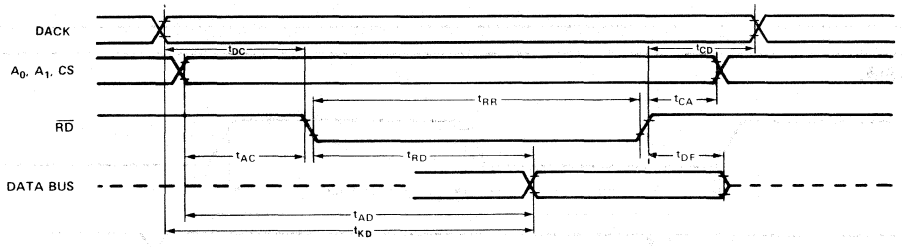

WRITE

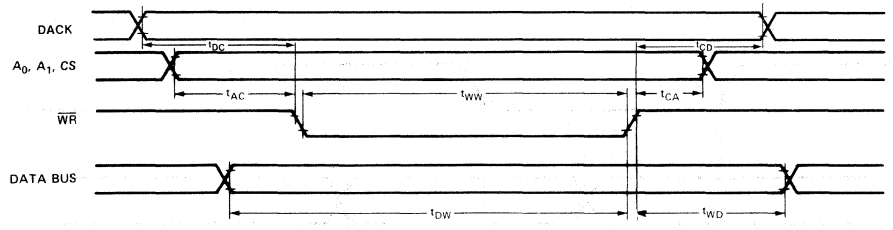

WAVEFORMS (Continued)

DMA

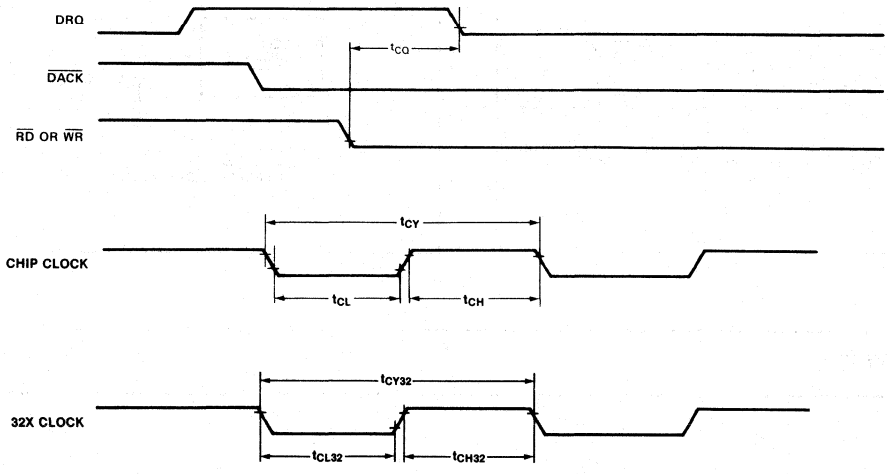

TRANSMIT

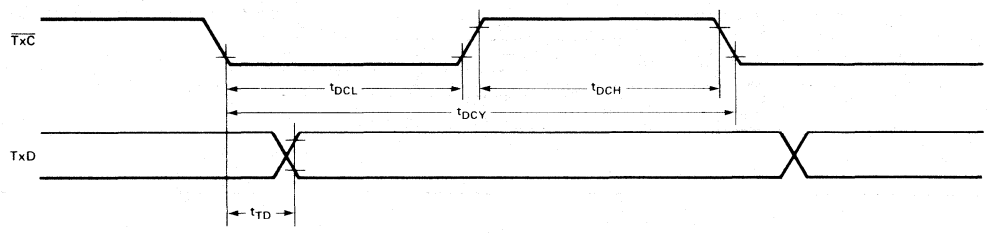

RECEIVE

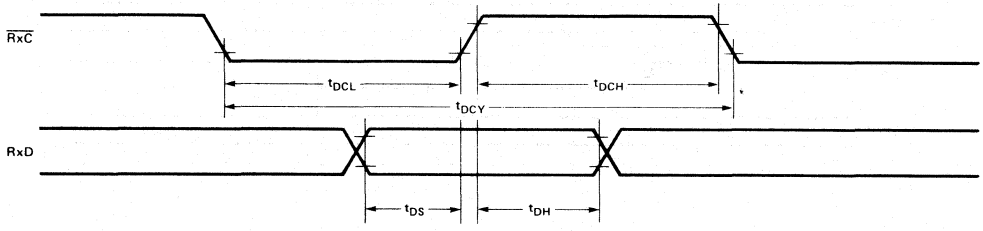

WAVEFORMS (Continued)

DPLL OUTPUT

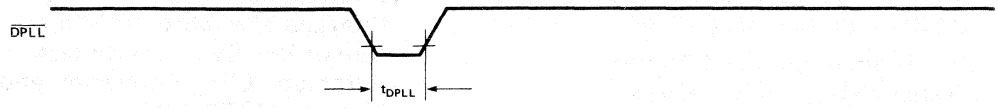

FLAG DETECT OUTPUT

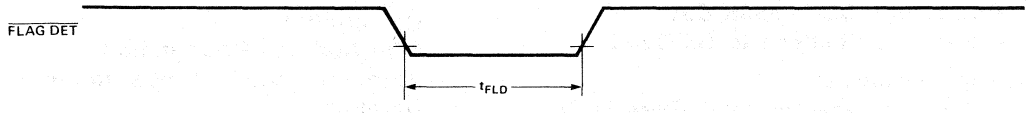

PRELIMINARY

8274
MULTI-PROTOCOL SERIAL CONTROLLER (MPSC)

- **Asynchronous, Byte Synchronous and Bit Synchronous Operation**
- **Two Independent Full Duplex Transmitters and Receivers**
- **Fully Compatible with 8048, 8051, 8085, 8088, and 8086 CPU's; 8257 and 8237 DMA Controllers; and 8089 I/O Proc.**
- **4 Independent DMA Channels**
- **Baud Rate: DC to 880K Baud**
  - **—Future Selections to 1M Baud**
- **Asynchronous:**
  - **—5-8 Bit Character; Odd, Even, or No Parity; 1, 1.5 or 2 Stop Bits**
  - **—Error Detection: Framing, Overrun, and Parity**
- **Byte Synchronous:**
  - **– Character Synchronization, Int. or Ext.**
  - **– One or Two Sync Characters**
  - **– Automatic CRC Generation and Checking (CRC-16)**
  - **– IBM Bisync Compatible**
- **Bit Synchronous:**
  - **– SDLC/HDLC Flag Generation and Recognition**
  - **– 8 Bit Address Recognition**
  - **– Automatic Zero Bit Insertion and Deletion**
  - **– Automatic CRC Generation and Checking (CCITT-16)**
  - **– CCITT X.25 Compatible**

The Intel® 8274 Multi-Protocol Series Controller (MPSC) is designed to interface High Speed Communications Lines using Asynchronous, IBM Bisync, and SDLC/HDLC protocol to Intel microcomputer systems. It can be interfaced with Intel's MCS-48, -85, -51; iAPX-86, and -88 families, the 8237 DMA Controller, or the 8089 I/O Processor in polled, interrupt driven, or DMA driven modes of operation.

The MPSC is a 40 pin device fabricated using Intel's High Performance HMOS Technology.

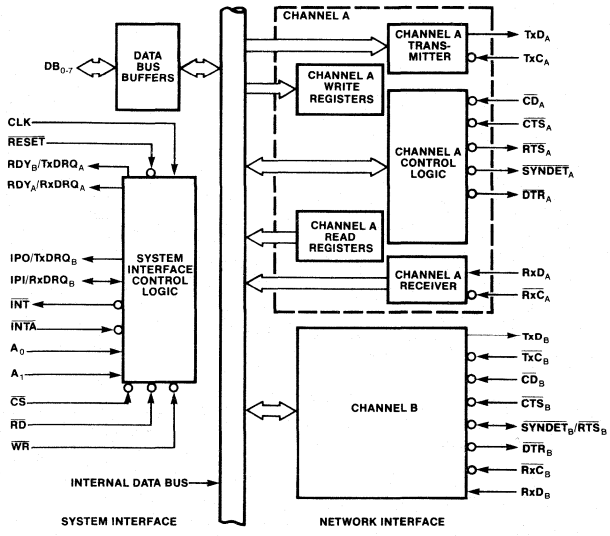

Figure 1. Block Diagram

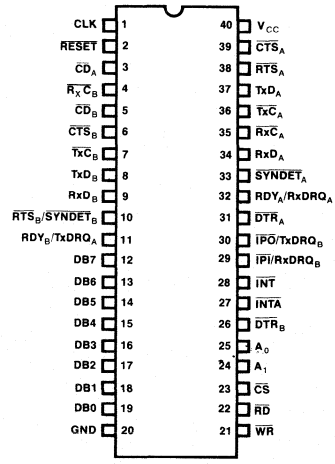

Figure 2. Pin Configuration

Table 1. Pin Description

Symbol	Pin No.	Type	Name and Function
CLK	1	I	**Clock:** System clock, TTL compatible.
$\overline{RESET}$	2	I	**Reset:** A low signal on this pin will force the MPSC to an idle state. TxD_A and TxD_B are forced high. The modem interface output signals are forced high. The MPSC will remain idle until the control registers are initialized. Reset must be true for one complete CLK cycle.
$\overline{CD_A}$	3	I	**Carrier Detect (Channel A):** Carrier Detect (Channel A) signals that the line transmission has started. The MPSC will begin to sample data on the RxD_A line if modem enables are selected.
$\overline{RxC_B}$	4	I	**Receiver Clock:** The Receiver Clock (Channel B) clocks in data on the RxD_B pin.
$\overline{CD_B}$	5	I	**Carrier Detect (Channel B):** Carrier Detect (Channel B) signals that the line transmission has started. The MPSC will begin to sample data on the RxD_B line if modem enables are selected.
$\overline{CTS_B}$	6	I	**Clear To Send (Channel B):** Clear To Send (Channel B) signals that the modem is ready to accept data from the MPSC. Clear To Send will enable Channel B transmitter if modem enables are selected, otherwise this pin may be used as a general purpose input.
$\overline{TxC_B}$	7	I	**Transmit Clock (Channel B):** Transmit Clock (Channel B) for TxD_B pin.
TxD_B	8	O	**Transmit Data (Channel B):** This line transmits the serial data to the communications channel (Channel B).
RxD_B	9	I	**Receive Data (Channel B):** This line receives serial data from the communications channel (Channel B).
$\overline{SYNDET_B}$/ $\overline{RTS_B}$	10	I/O	**Synchronous Detection (Channel B):** This pin is used in byte synchronous mode as either an internal sync detect (output) or as a means to force external synchronization (input). In SDLC mode, this pin is an output indicating Flag detection. In asynchronous mode it is a general purpose input (Channel B). Request To Send (Channel B) is a general purpose output, generally used to signal that Channel B is ready to send data.
RDY_B/ $TxDRQ_A$	11	O	**Ready Transmit Data:** In mode 0 this pin is used to synchronize data transfers for both Receive and Transmit of Channel B to the controlling processor's READY line (open collector). In modes 1 and 2 this pin requests a DMA transfer of data for a transmit operation (Channel A).
DB7	12	I/O	**Data Bus:** The Data Bus lines are bi-directional three state lines which interface with the system's Data Bus.
DB6	13		
DB5	14		
DB4	15		
DB3	16		
DB2	17		
DB1	18		
DB0	19		
GND	20		**Ground.**
V_{CC}	40		**Power:** +5V Supply.
$\overline{CTS_A}$	39	I	**Clear To Send (Channel A):** This signals that the modem is ready to accept data from the MPSC. Clear To Send will enable Channel A transmitter if modem enables are selected, otherwise this pin may be used as a general purpose input.
$\overline{RTS_A}$	38	O	**Request To Send (Channel A):** Request To Send (Channel A) is a general purpose output generally used to signal that Channel A is ready to send data.
TxD_A	37	O	**Transmit Data (Channel A):** This line transmits the serial data to the communications channel (Channel A).
$\overline{TxC_A}$	36	I	**Transmitter Clock (Channel A):** The transmitter clock (Channel A) clocks out data on the TxD_A pin.
$\overline{RxC_A}$	35	I	**Receiver Clock (Channel A):** The receiver clock (Channel A) clocks in data on the RxD_A pin.
RxD_A	34	I	**Receive Data (Channel A):** This line receives serial data from the communications channel (Channel A).
$\overline{SYNDET_A}$	33	I/O	**Synchronous Detection (Channel A):** This pin is used in byte synchronous mode as either an internal sync detect (output) or as a means to force external synchronization (input). In SDLC mode, this pin is an output indicating flag detection. In asynchronous mode it is a general purpose input (Channel A).

Table 1. Pin Description (Continued)

Symbol	Pin No.	Type	Name and Function
RDY_A/ $RxDRQ_A$	32	O	**Ready:** In mode 0 this pin is used to synchronize data transfers for both receive and transmit of Channel A to the controlling processor's READY line (open collector). In modes 1 and 2 $RxDRQ_A$ requests a DMA transfer of data for a receive operation for Channel A.
DTR_A	31	O	**Data Terminal Ready:** This pin is Data Terminal Ready (Channel A) which is a general purpose output.
$\overline{IPO}$/ $TxDRQ_B$	30	O	**Interrupt Priority Out:** In modes 0 and 1, IPO is Interrupt Priority Out. It is used to establish a hardware interrupt priority scheme with IPI. It is low only if IPI is low and the controlling processor is not servicing an interrupt from this MPSC. In mode 2, $TxDRQ_B$ requests a DMA transfer of data for a transmit operation for Channel B.
$\overline{IPI}$/ $RxDRQ_B$	29	I/O	**Interrupt Priority In:** In modes 0 and 1, IPI is Interrupt Priority In. A low on IPI means that no higher priority device is being serviced by the controlling processor's interrupt service routine. In mode 2, $RxDRQ_B$ requests a DMA transfer of data for a receive operation for Channel B.
$\overline{INT}$	28	O	**Interrupt:** The interrupt signal indicates that the highest priority internal interrupt requires service (open collector). Priority can be resolved via an external interrupt controller or a daisy-chain scheme.
$\overline{INTA}$	27	I	**Interrupt Acknowledge:** This Interrupt Acknowledge allows the highest priority interrupting device to generate an interrupt vector.
$\overline{DTR_B}$	26	O	**Data Terminal Ready (Channel B):** This is a general purpose output.
A_0	25	I	**Address:** This line selects Channel A or B during data or command transfers. A low selects Channel A.
A_1	24	I	**Address:** This line selects between data or command information transfer. A low means data.
$\overline{CS}$	23	I	**Chip Select:** Chip Select enables RD or WR.
$\overline{RD}$	22	I	**Read:** Read controls a data byte or status byte transfer from the MPSC to CPU.
$\overline{WR}$	21	I	**Write:** Write controls transfer of data or commands to the MPSC.

GENERAL DESCRIPTION

The Intel® 8274 Multi-Protocol Serial Controller is a microcomputer peripheral device which supports Asynchronous (Start/Stop), Byte Synchronous (Monosync, IBM Bisync), and Bit Synchronous (ISO's HDLC, IBM's SDLC) protocols. This controller's flexible architecture allows easy implementation of many variations of these three protocols with low software and hardware overhead.

The Multi-Protocol Serial Controller (MPSC) implements two independent serial receiver/transmitter channels.

The MPSC supports several microprocessor interface options; Polled, Wait, Interrupt driven and DMA driven. The MPSC is designed to support Intel's® MCS-85 and iAPX 86, 88 families.

This data sheet will describe the serial protocol functions, the microprocessor interface, a detailed register and command description, general system operations, specifications, and waveforms.

FUNCTIONAL DESCRIPTION

This section of the data sheet describes how the Asynchronous and Synchronous protocols are implemented in the MPSC. It describes general considerations, transmit operation, and receive operation for Asynchronous, Byte Synchronous, and Bit Synchronous protocols.

ASYNCHRONOUS OPERATIONS

General

For operation in the asynchronous mode, the MPSC must be initialized with the following information: character length (WR3; D7, D6 and WR5; D6, D5), clock rate (WR4; D7, D6), number of stop bits (WR4; D3, D2), odd, even or no parity (WR4; D1, D0), interrupt mode (WR1, WR2), and receiver (WR3; D0) or transmitter (WR5; D3) enable. When loading these parameters into the MPSC, WR4 information must

be written before the WR1, WR3, WR5 parameters/ commands. (See Detailed Command Description Section).

For transmission via a modem or RS232C interface, the Request To Send (RTS) (WR5; D1) and Data Terminal Ready (DTR) (WR5; D7) bits must be set along with the Transmit Enable bit (WR5; D3). Setting the Auto Enables (WR3; D5) bit allows the programmer to send the first character of the message without waiting for a clear to send (CTS).

Both the Framing Error and Receive Overrun Error flags are latched and cause an interrupt, i.e., if status affects vector (WR1B; D2) is selected, the interrupt vector indicates a special Receive condition.

If the External/Status Interrupt bit (WR1; D0) is enabled, Break Detect (RR0; D7) and Carrier Detect (RR0; D3) will cause an interrupt. Reset External/ Status Interrupts (WR0; D5, D4, D3) will clear Break Detect and Carrier Detect bits if they are set.

A status read after a data read will include error status for the next word in the buffer. If the Interrupt on First Character (WR1; D4, D3) is selected, then data and error status are held until an Error Reset command (WR0; D5, D4, D3) is given.

If the Interrupt on Every Character Mode bit (WR1; D4, D3) is selected, the interrupt vector is different if there is an error status in RR1. When the character is read, the error status bit is set and the Special Receive Condition vector is returned if Status Affects vector (WR1B; D2) is selected.

In a polled environment, the Receive Character Available bit (RR0; D0) must be monitored so that the CPU can determine when data is available. The bit is reset automatically when the data is read.

If the X1 clock mode is selected, the bit synchronization must be accomplished externally.

Transmit

The transmit function begins when the Transmit Enable bit (WR5; D3) is set. The MPSC automatically adds the start bit, the programmed parity bit (odd, even or no parity) and the programmed number of stop bits (1, 1.5 or 2 bits) to the data character being transmitted.

The Serial data is shifted out from the Transmit Data (TxD) output on the falling edge of the Transmit Clock (TxC) input, at a rate programmable to 1, 1/16, 1/32nd, or 1/64th of the clock rate supplied to the TxC input.

The TxD output is held high when the transmitter has no data to send, unless, under program control, the Send Break (WR5; D4) command is issued to hold the TxD low.

If the External/STATUS Interrupt bit (WR1; D0) is set, the status of CD, CTS and SYNDET are monitored, and, if any changes occur for a period of time greater than the minimum specified pulse width, an interrupt is generated. CTS is usually monitored using this interrupt feature.

If the Auto Enables (WR; D5) option is selected the programmer need not wait for the CTS before sending the first character. The MPSC will automatically wait for the CTS pin to go active before the transmission begins.

The Transmit Buffer Empty bit (RR0; D2) is set by the MPSC when the data byte from the buffer is loaded in the transmit shift register. The data is written to the MPSC only when the Tx buffer becomes empty to prevent overwriting.

Asynchronous Mode Register Setup

	D7	D6	D5	D4	D3	D2	D1	D0
WR3	00 Rx 5 b/char 01 Rx 7 b/char 10 Rx 6 b/char 11 Rx 8 b/char		AUTO ENABLES	0	0	0	0	Rx ENABLE
WR4	00 X1 Clock 01 X16 Clock 10 X32 Clock 11 X64 Clock		0	0	00 ENABLE SYNC MODES 01 1 STOP BIT 10 1½ STOP BITS 11 2 STOP BITS		EVEN/ $\overline{\text{ODD}}$ PARITY	PARITY ENABLE
WR5	DTR	00 Tx 5 b/char 01 Tx 7 b/char 10 Tx 6 b/char 11 Tx 8 b/char	SEND BREAK		Tx ENABLE	0	RTS	0

Receive

The receive function begins when the Receive Enable (WR3; D0) bit is set. If the Auto Enables (WR3; D5) option is selected, then Carrier Detect (CD) must also be low. A valid start bit is detected if a low persists for at least 1/2 bit time on the Receive Data (RxD) input.

The data is sampled at mid-bit time, on the rising edge of RxC, until the entire character is assembled. The receiver inserts 1's when a character is less than 8 bits. If parity (WR4; D1, D0) is enabled and the character is less than 8 bits the parity bit is not stripped from the character.

The receiver also stores error status for each of the 3 data characters in the data buffer. When a parity error is detected, the parity error flag (RR1; D4) is set and remains set until it is reset by the Error Reset command (WR0; D5, D4, D3).

When a character is assembled without a stop bit being detected, the Framing Error bit (RR1; D6) is set. The detection of a Framing Error adds an additional 1/2 bit time to the character time so the Framing Error is not interpreted as a new start bit.

If the CPU fails to read a data character while more than three characters have been received, the Receive Overrun bit (RR1; D5) is set. Only the overwritten character is flagged with the Receive Overrun bit. When this occurs, the fourth character assembled replaces the third character in the receive buffers. The Receive Overrun bit (RR1; D5) is reset by the Error Reset command (WR0; D5, D4, D3).

SYNCHRONOUS OPERATION—MONO SYNC, BI SYNC

General

The MPSC must be initialized with the following parameters: odd or even parity (WR4; D1,D0), X1 clock mode (WR4; D7, D6), 8- or 16-bit sync character (WR4; D5, D4), CRC polynomial (WR5; D2), Transmitter Enable (WR5; D3), interrupt modes (WR1, WR2), transmit character length (WR5; D6, D5) and receive character length (WR3; D7, D6). WR4 parameters must be written before WR1, WR3, WR5, WR6 and WR7.

The data is transmitted on the falling edge of the Transmit Clock, (TxC) and is received on the rising edge of Receive Clock (RxC). The X1 clock is used for both transmit and receive operations for all three sync modes: Mono, Bi and External.

Transmit Set-Up—Monosync, Bisync

Transmit data is held high after channel reset, or if the transmitter is not enabled. A break may be programmed to generate a spacing line that begins as soon as the Send Break (WR5; D4) bit is set. With the transmitter fully initialized and enabled, the default condition is continuous transmission of the 8- or 16-bit sync character.

Using interrupts for data transfer requires that the Transmit Interupt/DMA Enable bit (WR1; D1) be set. An interrupt is generated each time the transmit buffer becomes empty. The interrupt can be satisfied

Synchronous Mode Register Setup—Monosync, Bisync

	D7	D6	D5	D4	D3	D2	D1	D0
WR3	00 Rx 5 b/char 01 Rx 7 b/char 10 Rx 6 b/char 11 Rx 8 b/char		AUTO ENABLES	ENTER HUNT MODE	Rx CRC ENABLE	0	SYNC CHAR LOAD INHIBIT	Rx ENABLE
WR4	0	0	00 8 bit Sync 01 16 bit Sync 11 Ext Sync		0	0	EVEN/ $\overline{\text{ODD}}$ PARITY	PARITY ENABLE
WR5	DTR	00 Tx 5 b/char 01 Tx 7 b/char 10 Tx 6 b/char 11 Tx 8 b/char		SEND BREAK	Tx ENABLE	1 (SELECTS CRC-16)	RTS	Tx CRC ENABLE

either by writing another character into the transmitter or by resetting the Transmitter Interrupt/DMA Pending latch with a Reset Transmitter Interrupt/DMA Pending Command (WR0; D5, D4, D3). If nothing more is written into the transmitter, there can be no further Transmit Buffer Empty interrupt, but this situation does cause a Transmit Underrun condition (RR0; D6).

Data Transfers using the RDY signal are for software controlled data transfers such as block moves. $\overline{RDY}$ tells the CPU that the MPSC is not ready to accept/provide data and that the CPU must extend the output/input cycle. DMA data transfers use the TxDRQ A/B signals which indicate that the transmit buffer is empty, and that the MPSC is ready to accept the next data character. If the data character is not loaded into the MPSC by the time the transmit shift register is empty, the MPSC enters the Transmit Underrun condition.

The MPSC has two programmable options for solving the transmit underrun condition: it can insert sync characters, or it can send the CRC characters generated so far, followed by sync characters. Following a chip or channel reset, the Transmit Underrun/EOM status bit (RR0; D6) is in a set condition allowing the insertion of sync characters when there is no data to send. The CRC is not calculated on these automatically inserted sync characters. When the CPU detects the end of message, a Reset Transmit Underrun/EOM command can be issued. This allows CRC to be sent when the transmitter has no data to send.

In the case of sync insertion, an interrupt is generated only after the first automatically inserted sync character has been loaded in Transmit Shift Register. The status indicates the Transmit Underrun/EOM bit and the Transmit Buffer Empty bit are set.

In the case of CRC insertion, the Transmit Underrun/EOM bit is set and the Transmit Buffer Empty bit is reset while CRC is being sent. When CRC has been completely sent, the Transmit Buffer Empty status bit is set and an interrupt is generated to indicate to the CPU that another message can begin (this interrupt occurs because CRC has been sent and sync has been loaded into the Tx Shift Register). If no more messages are to be sent, the program can terminate transmission by resetting RTS, and disabling the transmitter (WR5; D3).

Bisync CRC Generation. Setting the Transmit CRC enable bit (WR5; D0) indicates CRC accumulation when the program sends the first data character to the MPSC. Although the MPSC automatically transmits up to two sync characters (16 bit sync), it is wise to send a few more sync characters ahead of the message (before enabling Transmit CRC) to ensure synchronization at the receiving end.

The Transmit CRC Enable bit can be changed on the fly any time in the message to include or exclude a particular data character from CRC accumulation. The Transmit CRC Enable bit should be in the desired state when the data character is loaded from the transmit shift register. To ensure this bit in the proper state, the Transmit CRC Enable bit must be issued before sending the data character to the MPSC.

Transmit Transparent Mode. Transparent mode (Bisync protocol) operation is made possible by the ability to change Transmit CRC Enable on the fly and by the additional capability of inserting 16 bit sync characters. Exclusion of DLE characters from CRC calculation can be achieved by disabling CRC calculation immediately preceding the DLE character transfer to the MPSC.

In the transmit mode, the transmitter always sends the programmed number of sync bits (8 or 16) (WR4; D5, D4). When in the Monosync mode, the transmitter sends from WR6 and the receiver compares against WR7. One of two CRC polynomials, CRC 16 or SDLC, may be used with synchronous modes. In the transmit initialization process, the CRC generator is initialized by setting the Reset Transmit CRC Generator command (WR0; D7, D6).

The External/Status interrupt (WR1; D0) mode can be used to monitor the status of the CTS input as well as the Transmit Underrun/EOM latch. Optionally, the Auto Enable (WR3; D5) feature can be used to enable the transmitter when CTS is active. The first data transfer to the MPSC can begin when the External/Status interrupt occurs (CTS (RR0; D5) status bit set) following the Transmit Enable command (WR5; D3).

Receive

After a channel reset, the receiver is in the Hunt phase, during which the MPSC looks for character synchronization. The Hunt begins only when the receiver is enabled and data transfer begins only when character synchronization has been achieved. If character synchronization is lost, the hunt phase can be re-entered by writing the Enter Hunt Phase (WR3; D4) bit. The assembly of received data continues until the MPSC is reset or until the receiver is

disabled (by command or by $\overline{CD}$ while in the Auto Enables mode) or until the CPU sets the Enter Hunt Phase bit. Under program control, all the leading sync characters of the message can be inhibited from loading the receive buffers by setting the Sync Character Load Inhibit (WR3; D1) bit. After character synchronization is achieved the assembled characters are transferred to the receive data FIFO.

Data may be transferred with or without interrupts. Transferring data without interrupts is used for a purely polled operation or for off-line conditions. There are three interrupt modes available for data transfer: Interrupt on First Character Only, Interrupt on Every Character, and Special Receive Conditions Interrupt.

Interrupt on First Character Only mode is normally used to start a polling loop, a block transfer sequence using RDY to synchronize the CPU to the incoming data rate or a DMA transfer using the RxDRQ signal. The MPSC interrupts on the first character and thereafter only interrupts after a Special Receive Condition is detected. This mode can be reinitialized using the Enable Interrupt On Next Receive Character (WR0; D5, D4, D3) command which allows the next character received to generate an interrupt. Parity Errors do not cause interrupts, but End of Frame (SDLC operation) and Receive Overrun do cause interrupts in this mode. If the external status interrupts (WR1; D0) are enabled an interrupt may be generated any time the $\overline{CD}$ changes state.

Interrupt On Every Character mode generates an interrupt whenever a character enters the receive buffer. Errors and Special Receive Conditions generate a special vector if the Status Affects Vector (WR1B; D2) is selected. Also the Parity Error may be programmed (WR1; D4, D3) not to generate the special vector while in the Interrupt On Every Character mode.

The Special Receive Condition interrupt can only occur while in the Receive Interrupt On First Character Only or the Interrupt On Every Receive Character modes. The Special Receive Condition interrupt is caused by the Receive Overrun (RR1; D5) error condition. The error status reflects an error in the current word in the receive buffer, in addition to any Parity or Overrun errors since the last Error Reset (WR0; D5, D4, D3). The Receive Overrun and Parity error status bits are latched and can only be reset by the Error Reset (WR0; D5, D4, D3) command.

SYNCHRONOUS OPERATION—SDLC

General

Like the other synchronous operations the SDLC mode must be initialized with the following parameters: SDLC mode (WR4; D5, D4), SDLC polynomial (WR5; D2), Request to Send, Data Terminal Ready, transmit character length (WR5; D6, D5), interrupt modes (WR1; WR2), Transmit Enable (WR5; D3), Receive Enable (WR3; D0), Auto Enable (WR3; D5) and External/Status Interrupt (WR1; D0).WR4 parameters must be written before WR1, WR3, WR5, WR6 and WR7.

The Interrupt modes for SDLC operation are similar to those discussed previously in the synchronous operations section.

Synchronous Mode Register Setup—SDLC/HDLC

	D7	D6	D5	D4	D3	D2	D1	D0
WR3	00 Rx 5b/char 01 Rx 7b/char 10 Rx 6b/char 11 Rx 8b/char		AUTO ENABLES	ENTER HUNT MODE	Rx CRC ENABLE	ADDRESS SEARCH MODE	0	Rx ENABLE
WR4	0	0	1 0 (SELECTS SDLC/ HDLC MODE)		0	0	0	0
WR5	DTR	00 Tx ≤5b/char 01 Tx 7b/char 10 Tx 6b/char 11 Tx 8b/char		0	Tx ENABLE	0 (SELECTS SDLC/ HDLC CRC)	RTS	Tx CRC ENABLE

Transmit

After a channel reset, the MPSC begins sending SDLC flags.

Following the flags in an SDLC operation the 8-bit address field, control field and information field may be sent to the MPSC by the microprocessor. The MPSC transmits the Frame Check Sequence using the Transmit Underrun feature. The MPSC automatically inserts a zero after every sequence of 5 consecutive 1's except when transmitting Flags or Aborts.

SDLC—like protocols do not have provision for fill characters within a message. The MPSC therefore automatically terminates an SDLC frame when the transmit data buffer and output shift register have no more bits to send. It does this by sending the two bytes of CRC and then one or more flags. This allows very high-speed transmissions under DMA or CPU control without requiring the CPU to respond quickly to the end-of-message situation.

After a reset, the Transmit Underrun/EOM status bit is in the set state and prevents the insertion of CRC characters during the time there is no data to send. Flag characters are sent. The MPSC begins to send the frame when data is written into the transmit buffer. Between the time the first data byte is written, and the end of the message, the Reset Transmit Underrun/EOM (WR0; D5, D4, D1) command must be issued. The Transmit Underrun/EOM status bit (RR0; D6) is in the reset state at the end of the message which automatically sends the CRC characters.

The MPSC may be programmed to issue a send Abort command (WR0; D5, D4, D3). This command causes at least eight 1's but less than fourteen 1's to be sent before the line reverts to continuous flags.

Receive

After initialization, the MPSC enters the Hunt phase, and remains in the Hunt phase until the first Flag is received. The MPSC never again enters the Hunt phase unless the microprocessor writes the Enter Hunt command.

The MPSC can be programmed to receive all frames or it can be programmed to the Address Search Mode. In the Address Search Mode, only frames with addresses that match the value in WR6 or the global address (0FFH) are received by the MPSC. Extended address recognition must be done by the microprocessor software.

The control and information fields are received as data.

SDLC/HDLC CRC calculation does not have an 8-bit delay, since all characters are included in the calculation, unlike Byte Synchronous Protocols.

Reception of an abort sequence (7 or more 1's) will cause the Break/Abort bit (RR0; D7) to be set and will cause an External/Status interrupt, if enabled. After the Reset External/Status Interrupts Command has been issued, a second interrupt will occur at the end of the abort sequence.

MPSC

Detailed Command Description

GENERAL

The MPSC supports an extremely flexible set of serial and system interface modes.

The system interface to the CPU consists of 8 ports or buffers:

$\overline{CS}$	A_1	A_0	Read Operation	Write Operation
0	0	0	Ch. A Data Read	Ch. A Data Write
0	1	0	Ch. A Status Read	Ch. A Command/Parameter
0	0	1	Ch. B Data Read	Ch. B Data Write
0	1	1	Ch. B Status Read	Ch. B Command/Parameter
1	X	X	High Impedence	High Impedence

Data buffers are addressed by $A_1 = 0$, and Command ports are addressed by $A_1 = 1$.

Command, parameter, and status information is held in 22 registers within the MPSC (8 write registers and 3 read registers for each channel). They are all accessed via the command ports.

An internal pointer register selects which of the command or status registers will be read or written during a command/status access of an MPSC channel.

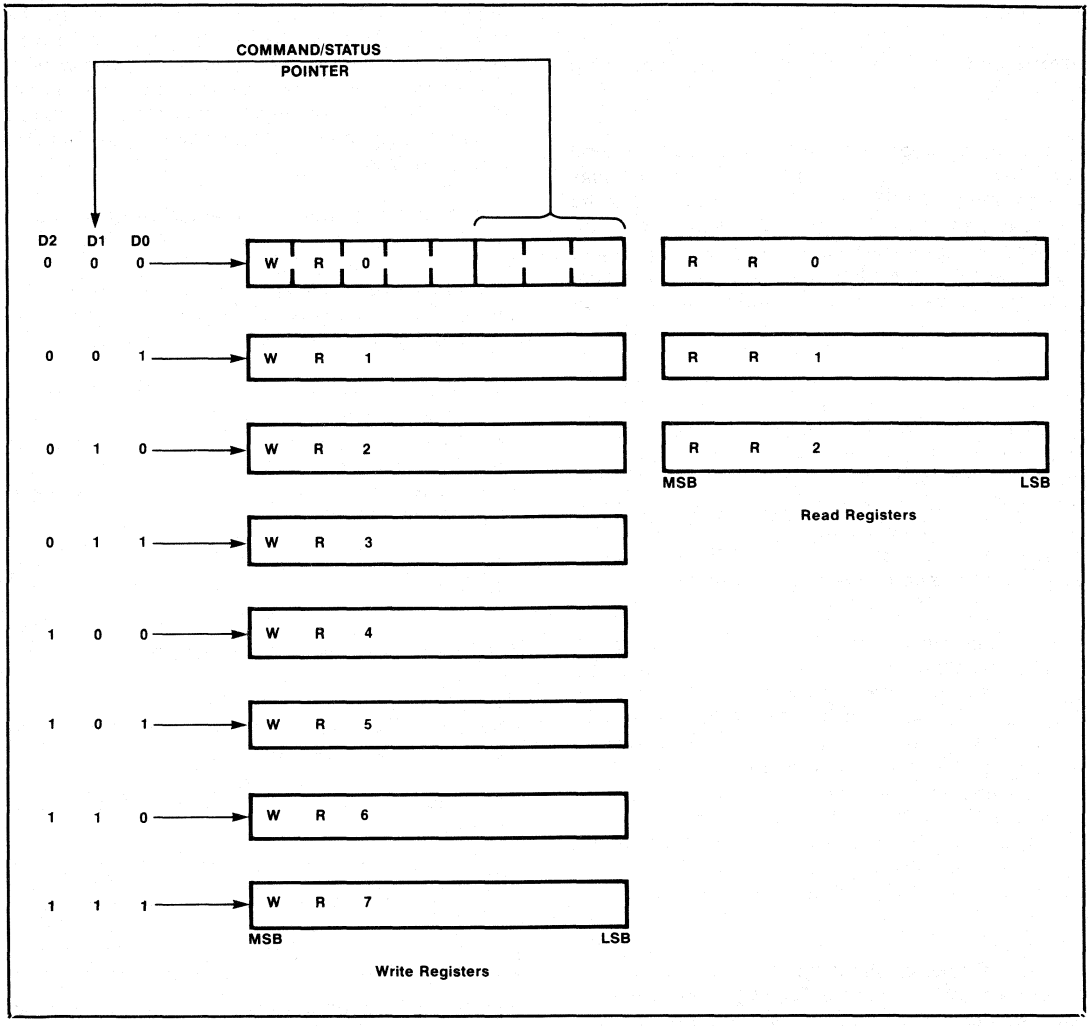

Figure 3. Command/Status Register Architecture (each serial channel)

After reset, the contents of the pointer register are zero. The first write to a command register causes the data to be loaded into Write Register 0 (WR0). The three least significant bits of WR0 are loaded into the Command/Status Pointer. The next read or write operation accesses the read or write register selected by the pointer. The pointer is reset after the read or write operation is completed.

COMMAND/STATUS DESCRIPTION

The following command and status bytes are used during initialization and execution phases of operation. All Command/Status operations on the two channels are identical, and independent, except where noted.

Write Register 0 (WR0):

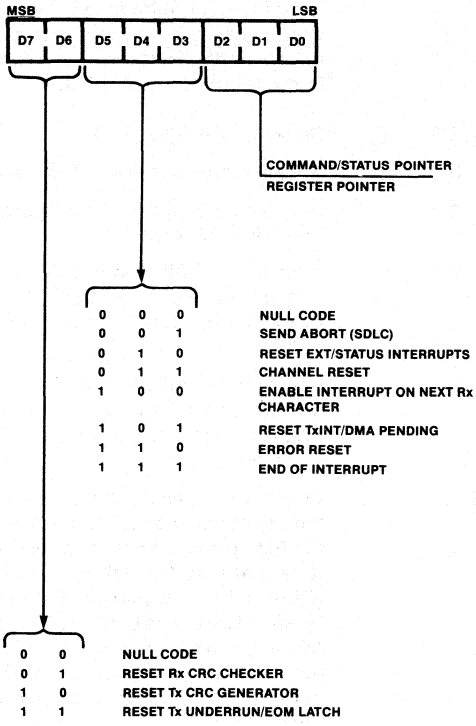

Detailed Register Description

WR0

D2, D1, D0—Command/Status Register Pointer bits determine which write-register the next byte is to be written into, or which read-register the next byte is to be read from. After reset, the first byte written into either channel goes into WR0. Following a read or write to any register (except WR0) the pointer will point to WR0.

D5, D4, D3—Command bits determine which of the basic seven commands are to be performed.

Command 0	Null—has no effect.
Command 1	Send Abort—causes the generation of eight to thirteen 1's when in the SDLC mode.
Command 2	Reset External/Status Interrupts—resets the latched status bits of RR0 and re-enables them, allowing interrupts to occur again.
Command 3	Channel Reset—resets the Latched Status bits of RR0, the interrupt prioritization logic and all control registers for the channel. Four extra system clock cycles should be allowed for MPSC reset time before any additional commands or controls are written into the channel.
Command 4	Enable Interrupt on Next Receive Character—if the Interrupt on First Receive Character mode is selected, this command reactivates that mode after each complete message is received to prepare the MPSC for the next message.
Command 5	Reset Transmitter Interrupt/DMA Pending—if The Transmit Interrupt/DMA Enable mode is selected, the MPSC automatically interrupts or requests DMA data transfer when the transmit buffer becomes empty. When there are no more characters to be sent, issuing this command prevents further transmitter interrupts or DMA requests until the next character has been completely sent.
Command 6	Error Reset—error latches, Parity and Overrun errors in RR1 are reset.
Command 7	End of Interrupt—resets the interrupt-in-service latch of the highest-priority internal device under service.
D7, D6	CRC Reset Code
00	Null—has no effect.
01	Reset Receive CRC Checker—resets the CRC checker to 0's. If in SDLC mode the CRC checker is initialized to all 1's.

10	Reset Transmit CRC Generator —resets the CRC generator to 0's. If in SDLC mode the CRC generator's initialized to all 1's.
11	Reset Tx Underrun/End of Message Latch.

Write Register 1 (WR1):

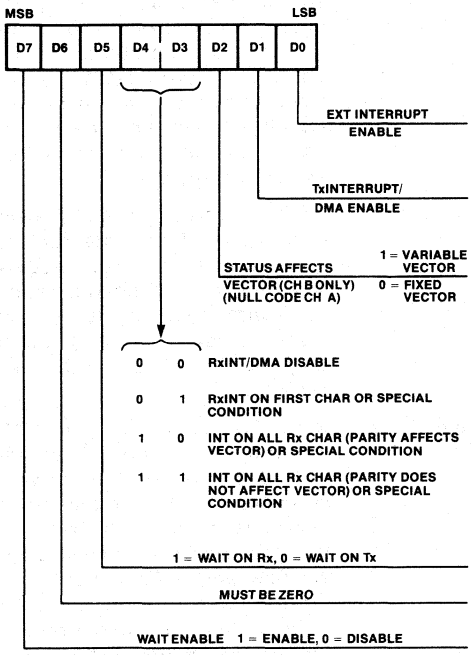

D0	External/Status Interrupt Enable —allows interrupt to occur as the result of transitions on the $\overline{CD}$, $\overline{CTS}$ or $\overline{SYNDET}$ inputs. Also allows interrupts as the result of a Break/Abort detection and termination, or at the beginning of CRC, or sync character transmission when the Transmit Underrun/EOM latch becomes set.
D1	Transmitter Interrupt/DMA Enable —allows the MPSC to interrupt or request a DMA transfer when the transmitter buffer becomes empty.
D2	Status Affects vector—(WR1, D2 active in channel B only.) If this bit is not set, then the fixed vector, programmed in WR2, is returned from an interrupt acknowledge sequence. If the bit is set then the vector returned from an interrupt acknowledge is variable as shown in the Interrupt Vector Table.
D4, D3	Receive Interrupt Mode
0 0	Receive Interrupts/DMA Disabled
0 1	Receive Interrupt on First Character Only or Special Condition
1 0	Interrupt on All Receive Characters or Special Condition (Parity Error is a Special Receive Condition)
1 1	Interrupt on All Receive Characters or Special Condition (Parity Error is not a Special Receive Condition).
D5	Wait on Receive/$\overline{Transmit}$—when the following conditions are met the RDY pin is activated, otherwise it is held in the High-Z state. (Conditions: Interrupt Enabled Mode, Wait Enabled, $\overline{CS}$ = 0, A0 = 0/1, and A1 = 0). The RDY pin is pulled low when the transmitter buffer is full or the receiver buffer is empty and it is driven High when the transmitter buffer is empty or the receiver buffer is full. The RDY_A and RDY_B may be wired OR connected since only one signal is active at any one time while the other is in the High Z state.
D6	Must be Zero
D7	Wait Enable—enables the wait function.

WR2 **Channel A**

D1, D0 — System Configuration—These specify the data transfer from MPSC channels to the CPU, either interrupt or DMA based.

0 0 — Channel A and Channel B both use interrupts

0 1 — Channel A uses DMA, Channel B uses interrupt

1 0 — Channel A and Channel B both use DMA

1 1 — Illegal Code

D2 — Priority—this bit specifies the relative priorities of the internal MPSC interrupt/DMA sources.

0 — (Highest) RxA, TxA, RxB, TxB ExTA, ExTB (Lowest)

1 — (Highest) RxA, RxB, TxA, TxB, ExTA, ExTB (Lowest)

D5, D4, D3 — Interrupt Code—specifies the behavior of the MPSC when it receives an interrupt acknowledge sequence from the CPU. (See Interrupt Vector Mode Table).

0 X X — Non-vectored interrupts—intended for use with external DMA CONTROLLER. The Data Bus remains in a high impedence state during INTA sequences.

1 0 0 — 8085 Vector Mode 1—intended for use as the primary MPSC in a daisy chained priority structure. (See System Interface section)

1 0 1 — 8085 Vector Mode 2—intended for use as any secondary MPSC in a daisy chained priority structure. (See System Interface section)

1 1 0 — 8086/88 Vector Mode—intended for use as either a primary or secondary in a daisy chained priority structure. (See System Interface section)

D6 — Must be zero.

D7
0 — Pin 10 = $\overline{RTS_B}$
1 — Pin 10 = $\overline{SYNDET_B}$

Write Register 2 (WR2): Channel A

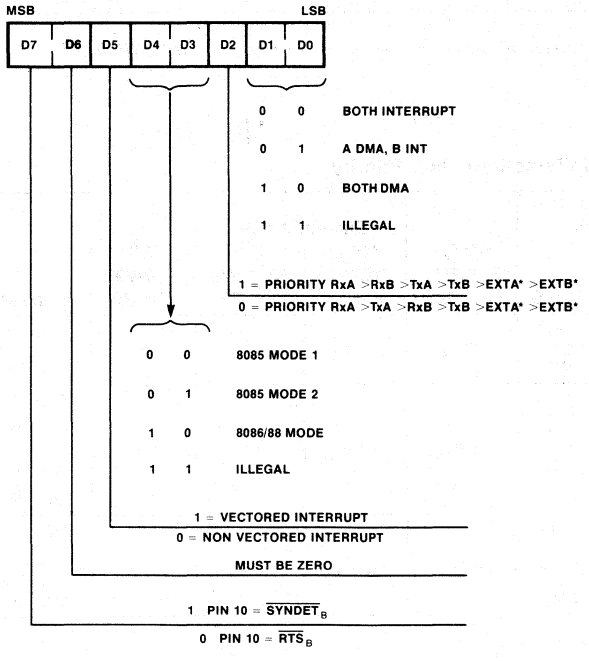

The following table describes the MPSC's response to an interrupt acknowledge sequence:

D5	D4	D3	$\overline{IPI}$	MODE	INTA	Data Bus
0	X	X	X	Non-vectored	Any INTA	D7 D0 High Impedance
1	0	0	0	85 Mode 1	1st INTA 2nd INTA 3rd INTA	1 1 0 0 1 1 0 1 V7 V6 V5 V4* V3* V2* V1 V0 0 0 0 0 0 0 0 0
1	0	0	1	85 Mode 1	1st INTA 2nd INTA 3rd INTA	1 1 0 0 1 1 0 1 High Impedance High Impedance
1	0	1	0	85 Mode 2	1st INTA 2nd INTA 3rd INTA	High Impedance V7 V6 V5 V4* V3* V2* V1 V0 0 0 0 0 0 0 0 0
1	0	1	1	85 Mode 2	1st INTA 2nd INTA 3rd INTA	High Impedance High Impedance High Impedance
1	1	0	0	86 Mode	1st INTA	High Impedance V7 V6 V5 V4 V3 V2* V1* V0*
1	1	0	1	86 Mode	1st INTA 2nd INTA	High Impedance High Impedance

These bits are variable if the "status affects vector" mode has been programmed, (WR1B, p.2).

Interrupt/DMA Mode, Pin Functions, and Priority

Ch. A WR2			Int/DMA Mode		Pin Functions				Priority	
D_2	D_1	D_0	CH. A	CH. B	RDY_A/ $RxDRQ_A$ Pin 32	RDY_B/ $TxDRQ_A$ Pin 11	$\overline{IPI}$/ $RxDRQ_B$ Pin 29	$\overline{IPO}$/ $TxDRQ_B$ Pin 30	Highest	Lowest
0	0	0	INT	INT	RDY_A	RDY_B	$\overline{IPI}$	$\overline{IPO}$	RxA, TxA, RxB, TxB, EXT_A, EXT_B	
1	0	0	INT	INT					RxA, RxB, TxA, TxB, EXT_A, EXT_B	
0	0	1	DMA	INT	$RxDRQ_A$	$TxDRQ_A$	$\overline{IPI}$	$\overline{IPO}$	RxA, TxA (DMA)	
									RxA[1], RxB, TxB, EXT_A, EXT_B (INT)	
1	0	1	DMA	INT					RxA, TxA (DMA)	
									RxA[1], RxB, TxB, EXT_A, EXT_B (INT)	
0	1	0	DMA	DMA	$RxDRQ_A$	$TxDRQ_A$	$RxDRQ_B$	$TxDRQ_B$	RxA, TxA, RxB, TxB (DMA) RxA[1], RxB[1], EXT_A, EXT_B (INT)	
1	1	0	DMA	DMA					RxA, RxB, TxA, TxB, (DMA) RxA[1], RxB[1], EXT_A, EXT_B (INT)	

[1]Special Receive Condition

Interrupt Vector Mode Table

8085 Modes 8086/88 Mode	V_4 V_2	V_3 V_1	V_2 V_0	Channel	Condition
Note 1: Special Receive Condition = Parity Error, Rx Overrun Error, Framing Error, End of Frame (SDLC)	0 0 0 0	0 0 1 1	0 1 0 1	B	Tx Buffer Empty Ext/Status Change Rx Char. Available Special Rx Condition (Note 1)
	1 1 1 1	0 0 1 1	0 1 0 1	A	Tx Buffer Empty Ext/Status Change Rx Char. Available Special Rx Condition (Note 1)

Write Register 2 (WR2): Channel B

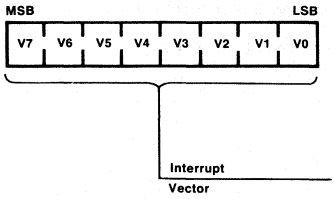

WR2 CHANNEL B

D7–D0 Interrupt vector—This register contains the value of the interrupt vector placed on the data bus during interrupt acknowledge sequences.

Write Register 3 (WR3):

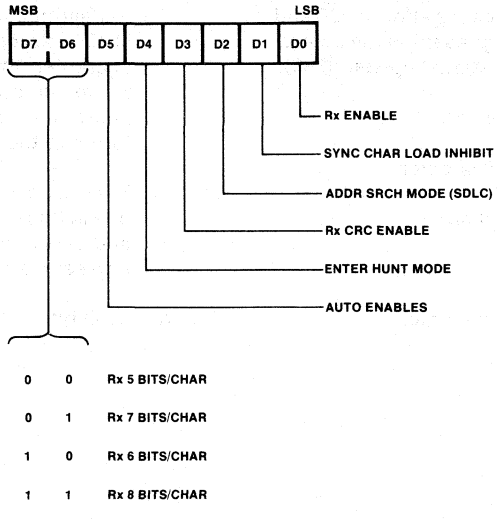

WR3

D0 Receiver Enable—A one enables the receiver to begin. This bit should be set only after the receiver has been initialized.

D1 Sync Character Load Inhibit—A one prevents the receiver from loading sync characters into the receive buffers.

D2 Address Search Mode—If the SDLC mode has been selected, the MPSC will receive all frames unless this bit is a 1. If this bit is a 1, the MPSC will receive only frames with address bytes that match the global address (0FFH) or the value loaded into WR6. This bit must be zero in non-SDLC modes.

D3 Receive CRC Enable—A one in this bit enables (or re-enables) CRC calculation. CRC calculation starts with the last character placed in the Receiver FIFO. A zero in this bit disables, but does not reset, the Receiver CRC generator.

D4 Enter Hunt Phase—After initialization, the MPSC automatically enters the Hunt mode. If synchronization is lost, the Hunt phase can be re-entered by writing a one to this bit.

D5 Auto Enables—A one written to this bit causes $\overline{CD}$ to be automatic enable signal for the receiver and $\overline{CTS}$ to be an automatic enable signal for the transmitter. A zero written to this bit limits the effect of $\overline{CD}$ and $\overline{CTS}$ signals to setting/resetting their corresponding bits in the status register (RR0).

D7, D6 Receive Character length

0 0 Receive 5 Data bits/character

0 1 Receive 7 Data bits/character

1 0 Receive 6 Data bits/character

1 1 Receive 8 Data bits/character

Write Register 4 (WR4):

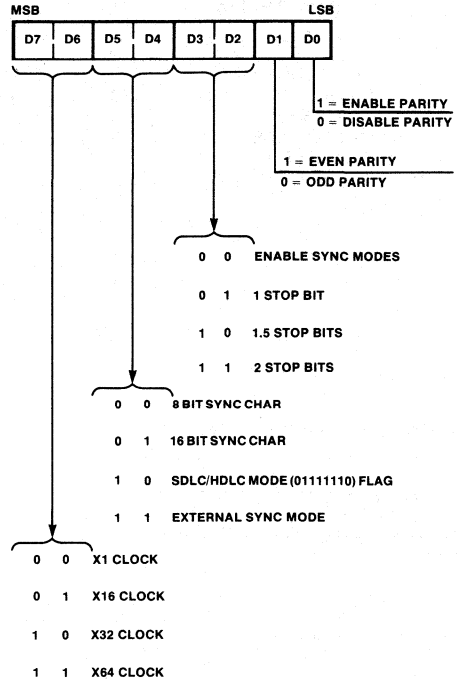

WR4

D0 Parity—a one in this bit causes a parity bit to be added to the programmed number of data bits per character for both the transmitted and received character. If the MPSC is programmed to receive 8 bits per character, the parity bit is not transferred to the microprocessor. With other receiver character lengths, the parity bit is transferred to the microprocessor.

D1 Even/Odd Parity—if parity is enabled, a one in this bit causes the MPSC to transmit and expect even parity, and a zero causes it to send and expect odd parity.

D3, D2 Stop bits/sync mode

0 0 Selects synchronous modes.

0 1 Async mode, 1 stop bit/character

1 0 Async mode, 1-½ stop bits/character
1 1 Async mode, 2 stop bits/character

D5, D4 Sync mode select

0 0 8 bit sync character

0 1 16 bit sync character

1 0 SDLC mode (Flag sync)

1 1 External sync mode

D7, D6 Clock mode—selects the clock/data rate multiplier for both the receiver and the transmitter. 1x mode must be selected for synchronous modes. If the 1x mode is selected, bit synchronization must be done externally.

0 0 Clock rate = Data rate x 1

0 1 Clock rate = Data rate x 16

1 0 Clock rate = Data rate x 32

1 1 Clock rate = Data rate x 64

Write Register 5 (WR5):

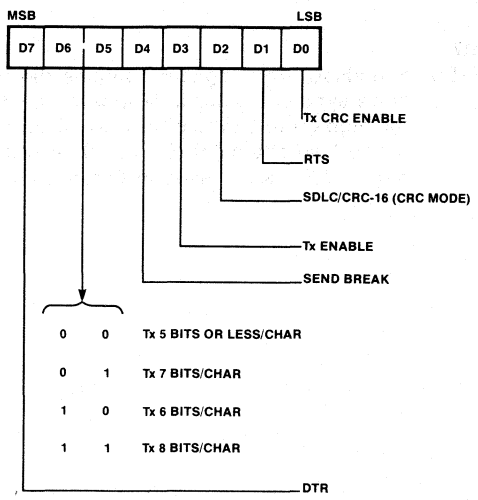

WR5

D0 Transmit CRC Enable—a one in this bit enables the transmitter CRC generator. The CRC calculation is done when a character is moved from the transmit buffer into the shift register. A zero in this bit disables CRC calculations. If this bit is not set when a transmitter underrun occurs, the CRC will not be sent.

D1 Request to Send—a one in this bit forces the $\overline{RTS}$ pin active (low) and zero in this bit forces the $\overline{RTS}$ pin inactive (high).

D2 CRC Select—a one in this bit selects the CRC −16 polynomial ($X^{16} + X^{15} + X^2 + 1$) and a zero in this bit selects the CCITT-CRC polynomial ($X^{16} + X^{12} + X^5 + 1$).

D3 Transmitter Enable—a zero in this bit forces a marking state on the transmitter output. If this bit is set to zero during data or sync character transmission, the marking state is entered after the character has been sent. If this bit is set to zero during transmission of a CRC character, sync or flag bits are substituted for the remainder of the CRC bits.

D4 Send Break—a one in this bit forces the transmit data low. A zero in this bit allows normal transmitter operation.

D6, D5 Transmit Character length

0 0 Transmit 5 or less bits/character

0 1 Transmit 7 bits/character

1 0 Transmit 6 bits/character

1 1 Transmit 8 bits/character

Bits to be sent must be right justified least significant bit first, eg:

D7	D6	D5	D4	D3	D2	D1	D0
0	0	B5	B4	B3	B2	B1	B0

Five or less mode allows transmission of one to five bits per character. The microprocessor must format the data in the following way:

D7	D6	D5	D4	D3	D2	D1	D0	
1	1	1	1	0	0	0	B0	Sends one data bit
1	1	1	0	0	0	B1	B0	Sends two data bits
1	1	0	0	0	B2	B1	B0	Sends three data bits
1	0	0	0	B3	B2	B1	B0	Sends four data bits
0	0	0	B4	B3	B2	B1	B0	Sends five data bits

D7 Data Terminal Ready—when set, this bit forces the $\overline{DTR}$ pin active (low). When reset, this bit forces the $\overline{DTR}$ pin inactive (high).

Write Register 6 (WR6):

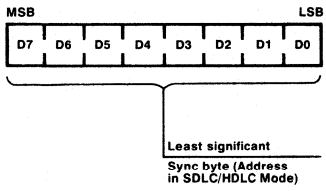

WR6

D7–D0 Sync/Address—this register contains the transmit sync character in Monosync mode, the low order 8 sync bits in Bisync mode, or the Address byte in SDLC mode.

Write Register 7 (WR7):

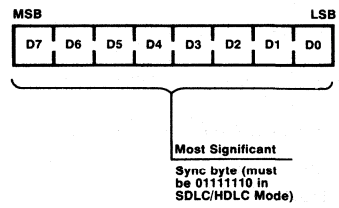

WR7

D7–D0 Sync/Flag—this register contains the receive sync character in Monosync mode, the high order 8 sync bits in Bisync mode, or the Flag character (01111110) in SDLC mode. WR7 is not used in External Sync mode.

Read Register 0 (RR0):

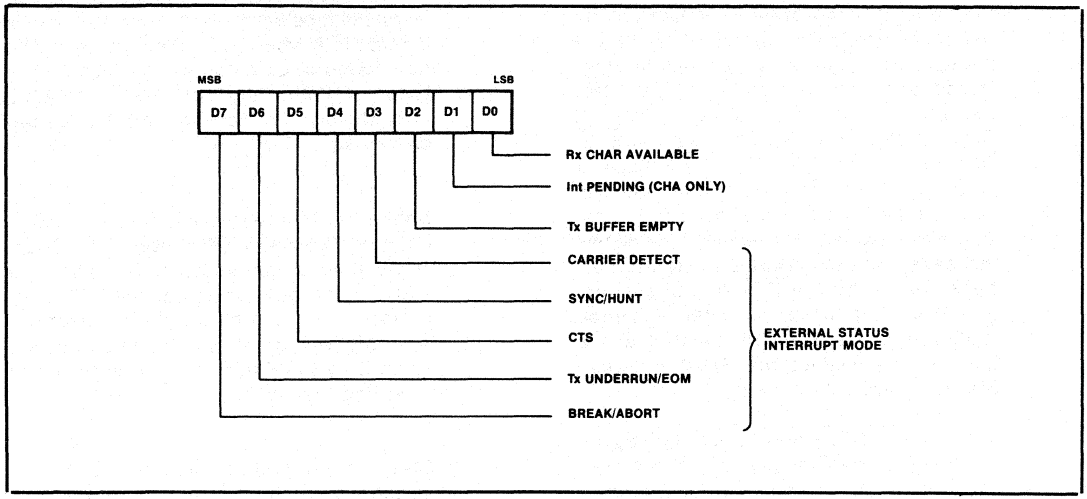

RR0

D0 Receive Character Available—this bit is set when the receive FIFO contains data and is reset when the FIFO is empty.

D1 Interrupt Pending*—This Interrupt-Pending bit is reset when an EOI command is issued and there is no other interrupt request pending at that time.

D2 Transmit Buffer Empty—This bit is set whenever the transmit buffer is empty except when CRC characters are being sent in a synchronous mode. This bit is reset when the transmit buffer is loaded. This bit is set after an MPSC reset.

D3 Carrier Detect—This bit contains the state of the CD pin at the time of the last change of any of the External/Status bits ($\overline{CD}$, CTS, Sync/Hunt, Break/Abort, or Tx Underrun/EOM). Any change of state of the $\overline{CD}$ pin causes the CD bit to be latched and causes an External/Status interrupt. This bit indicates current state of the $\overline{CD}$ pin immediately following a Reset External/Status Interrupt command.

*In vector mode this bit is set at the falling edge of the second INTA in an INTA cycle for an internal interrupt request. In non-vector mode, this bit is set at the falling edge of RD input after pointer 2 is specified. This bit is always zero in Channel B.

D4 Sync/Hunt—In asynchronous modes, the operation of this bit is similar to the CD status bit, except that Sync/Hunt shows the state of the $\overline{SYNDET}$ input. Any High-to-Low transition on the $\overline{SYNDET}$ pin sets this bit, and causes an External/Status interrupt (if enabled). The Reset External/Status Interrupt command is issued to clear the interrupt. A Low-to-High transition clears this bit and sets the External/Status interrupt. When the External/Status interrupt is set by the change in state of any other input or condition, this bit shows the inverted state of the $\overline{SYNDET}$ pin at time of the change. This bit must be read immediately following a Reset External/Status Interrupt command to read the current state of the $\overline{SYNDET}$ input.

In the External Sync mode, the Sync/Hunt bit operates in a fashion similar to the Asynchronous mode, except the Enter Hunt Mode control bit enables the external sync detection logic. When the External Sync Mode and Enter Hunt Mode bits are set (for example, when the receiver is enabled following a reset), the $\overline{SYNDET}$ input must be held High by the external logic until external character synchronization is achieved. A High at the $\overline{SYNDET}$ input holds the Sync/Hunt status in the reset condition.

When external synchronization is achieved, $\overline{SYNDET}$ must be driven Low on the second rising edge of $\overline{RxC}$ after the rising edge of $\overline{RxC}$ on which the last bit of the sync character was received. In other words, after the sync pattern is detected, the external logic must wait for two full Receive Clock cycles to activate the $\overline{SYNDET}$ input. Once $\overline{SYNDET}$ is forced Low, it is good practice to keep it Low until the CPU informs the external sync logic that synchronization has been lost or a new message is about to start. The High-to-Low transition of the $\overline{SYNDET}$ output sets the Sync/Hunt bit, which sets the External/Status interrupt. The CPU must clear the interrupt by issuing the Reset External/Status Interrupt Command.

When the $\overline{SYNDET}$ input goes High again, another External/Status interrupt is generated that must also be cleared. The Enter Hunt Mode control bit isset whenever character synchronization is lost or the end of message is detected. In this case, the MPSC again looks for a High-to-Low transition on the $\overline{SYNDET}$ input and the operation repeats as explained previously. This implies the CPU should also inform the external logic that character synchronization has been lost and that the MPSC is waiting for $\overline{SYNDET}$ to become active.

In the Monosync and Bisync Receive modes, the Sync/Hunt status bit is initially set to 1 by the Enter Hunt Mode bit. The Sync/Hunt bit is reset when the MPSC establishes character synchronization. The High-to-Low transition of the Sync/Hunt bit causes an External/Status interrupt that must be cleared by the CPU issuing the Reset External/Status Interupt command. This enables the MPSC to detect the next transition of other External/Status bits.

When the CPU detects the end of message or that character synchronization is lost, it sets the Enter Hunt Mode control bit, which sets the Sync/Hunt bit to 1. The Low-to-High transition of the Sync/Hunt bit sets the External/Status Interrupt, which must also be cleared by the Reset External/Status Interrupt Command. Note that the SYNDET pin acts as an output in this mode, and goes low every time a sync pattern is detected in the data stream.

In the SDLC mode, the Sync/Hunt bit is initially set by the Enter Hunt mode bit, or when the receiver is disabled. In any case, it is reset to 0 when the opening flag of t he first frame is detected by the MPSC. The External/Status interrupt is also generated, and should be handled as discussed previously .

Unlike the Monosync and Bisync modes, once the Sync/Hunt bit is reset in the SDLC mode, it does not need to be set when the end of message is detected. The MPSC automatically maintains synchronization. The only way the Sync/Hunt bit can be set again is by the Enter Hunt Mode bit, or by disabling the receiver.

D5 Clear to Send—this bit contains the inverted state of the $\overline{CTS}$ pin at the time of the last change of any of the External/Status bits (CD, CTS, Sync/Hunt, Break/Abort, or Tx Underrun/EOM). Any change of state of the $\overline{CTS}$ pin causes the CTS bit to be latched and causes an External/Status interrupt. This bit indicates the inverse of the current state of the $\overline{CTS}$ pin immediately following a Reset External/Status Interrupt command.

D6 Transmitter Underrun/End of Message—this bit is in a set condition following a reset (internal or external). The only command that can reset this bit is the Reset Transmit Underrun/EOM Latch command (WR0, D_6 and D_7). When the Transmit Underrun condition occurs, this bit is set, which causes the External/Status Interrupt which must be reset by issuing a Reset External/Status command (WR0; command 2).

D7 Break/Abort—in the Asynchronous Receive mode, this bit is set when a Break sequence (null character plus framing error) is detected in the data stream. The External/Status interrupt, if enabled, is set when break is detected. The interrupt service routine must issue the Reset External/Status Interrupt command (WR0, Command 2) to the break detection logic so the Break sequence termination can be recognized.

SDLC Residue Code Table (I Field Bits in 2 Previous Bytes)

RR1 D3, D2 D1	8 bits/char		7 bits/char		6 bits/char		5 bits/char	
	Previous Byte	2nd Prev. Byte	Previous Byte	2nd Prev. Byte	Previous Byte	2nd Prev. Byte	Previous Byte	2nd Prev. Byte
1 0 0	0	3	0	2	0	1	0	5
0 1 0	0	4	0	3	0	2	0	1
1 1 0	0	5	0	4	0	3	0	2
0 0 1	0	6	0	5	0	4	0	3
1 0 1	0	7	0	6	0	5	—	—
0 1 1	0	8	0	—	—	—	—	—
1 1 1	1	8	—	—	—	—	—	—
0 0 0	2	8	1	7	0	6	0	4

The Break/Abort bit is reset when the termination of the Break sequence is detected in the incoming data stream. The termination of the Break sequence also causes the External/Status interrupt to be set. The Reset External/Status Interrupt command must be issued to enable the break detection logic to look for the next Break sequence. A single extraneous null character is present in the receiver after the termination of a break; it should be read and discarded.

In the SDLC Receive mode, this status bit is set by the detection of an Abort sequence (seven or more 1's). The External/Status interrupt is handled the same way as in the case of a Break. The Break/Abort bit is not used in the Synchronous Receive mode.

D0 All sent—this bit is set when all characters have been sent, in asynchronous modes. It is reset when characters are in the transmitter, in asynchronous modes. In synchronous modes, this bit is always set.

D3, D2, D1 Residue Codes—bit synchronous protocols allow I-fields that are not an integral number of characters. Since transfers from the MPSC to the CPU are character oriented, the residue codes provide the capability of receiving leftover bits. Residue bits are right justified in the last two data bytes received.

D4 Parity Error—If parity is enabled, this bit is set for received characters whose parity does not match the programmed sense (Even/Odd). This bit is latched. Once an error occurs, it remains set until the Error Reset command is written.

Read Register 1 (RR1): (Special Receive Condition Mode)

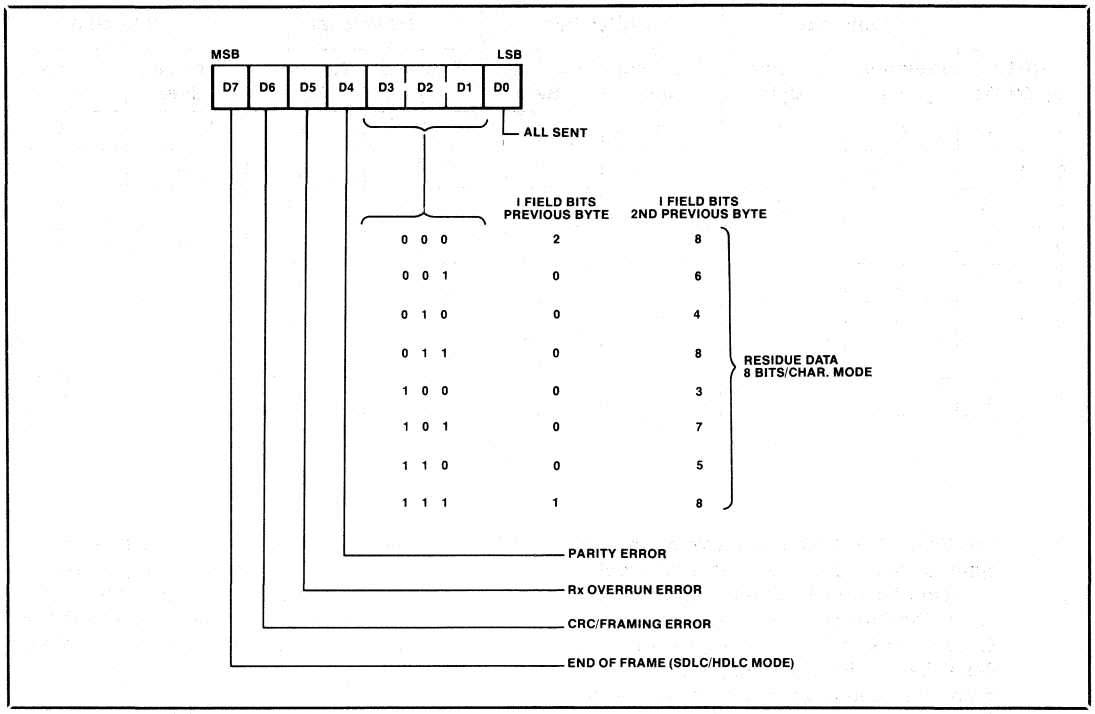

D5 Receive Overrun Error—this bit indicates that the receive FIFO has been overloaded by the receiver. The last character in the FIFO is overwritten and flagged with this error. Once the overwritten character is read, this error condition is latched until reset by the Error Reset command. If the MPSC is in the status affects vector mode, the overrun causes a special Receive Condition Vector.

D6 CRC/Framing Error—In async modes, a one in this bit indicates a receive framing error. In synchronous modes, a one in this bit indicates that the calculated CRC value does not match the last two bytes received. It can be reset by issuing an Error Reset command.

D7 End of Frame—this bit is valid only in SDLC mode. A one indicates that a valid ending flag has been received. This bit is reset either by an Error Reset command or upon reception of the first character of the next frame.

Read Register 2 (RR2):

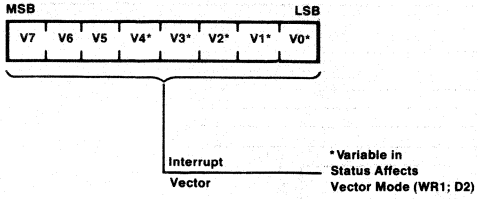

RR2 Channel B

D7–D0 Interrupt vector—contains the interrupt vector programmed into WR2. If the status affects vector mode is selected, it contains the modified vector. (See WR2) RR2 contains the modified vector for the highest priority interrupt pending. If no interrupts are pending, the variable bits in the vector are set to one.

SYSTEM INTERFACE

General

The MPSC to Microprocessor System interface can be configured in many flexible ways. The basic interface types are polled, wait, interrupt driven, or direct memory access driven.

Polled operation is accomplished by repetitively reading the status of the MPSC, and making decisions based on that status. The MPSC can be polled at any time.

Wait operation allows slightly faster data throughput for the MPSC by manipulating the Ready input to the microprocessor. Block Read or Write Operations to the MPSC are started at will by the microprocessor and the MPSC deactivates its RDY signal if it is not yet ready to transmit the new byte, or if reception of new byte is not completed.

Interrupt driven operation is accomplished via an internal or external interrupt controller. When the MPSC requires service, it sends an interrupt request signal to the microprocessor, which responds with an interrupt acknowledge signal. When the internal or external interrupt controller receives the acknowledge, it vectors the microprocessor to a service routine, in which the transaction occurs.

DMA operation is accomplished via an external DMA controller. When the MPSC needs a data transfer, it request a DMA cycle from the DMA controller. The DMA controller then takes control of the bus and simultaneously does a read from the MPSC and a write to memory or vice-versa.

The following section describes the many configurations of these basic types of system interface techniques for both serial channels.

Polled Operation:

In the polled mode, the CPU must monitor the desired conditions within the MPSC by reading the appropriate bits in the read registers. All data available, status, and error conditions are represented by the appropriate bits in read registers 0 and 1 for channels A and B.

There are two ways in which the software task of monitoring the status of the MPSC has been reduced. One is the "ORing" of all conditions into the Interrupt Pending bit. (RR0; D1 channel A only). This bit is set when the MPSC requires service, allowing the CPU to monitor one bit instead of four status registers. The other is available when the "status-affects-vector" mode is selected. By reading RR2 Channel B, the CPU can read a vector who's value will indicate that one or more of group of conditions has occurred, narrowing the field of possible conditions. See WR2 and RR2 in the Detailed Command Description section.

Software Flow, Polled Operation

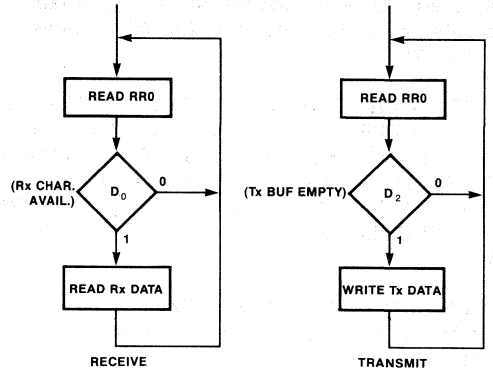

AFN-01701A

Hardware Configuration, Polled Operation

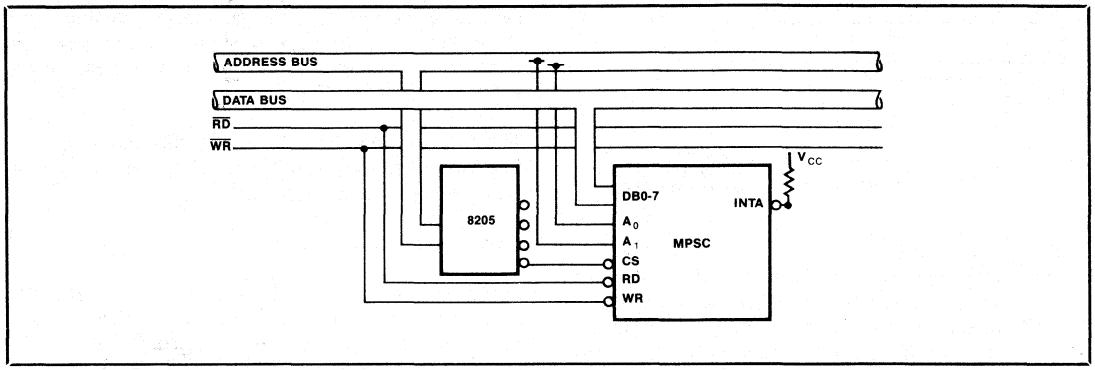

WAIT OPERATION:
Wait Operation is intended to facilitate data transmission or reception using block move operations. If a block of data is to be transmitted, for example, the CPU can execute a String I/O instruction to the MPSC. After writing the first byte, the CPU will attempt to write a second byte immediately as is the case of block move. The MPSC forces the RDY signal low which inserts wait states in the CPU's write cycle until the transmit buffer is ready to accept a new byte. At that time, the RDY signal is high allowing the CPU to finish the write cycle. The CPU then attempts the third write and the process is repeated.

Similar operation can be programmed for the receiver. During initialization, wait on transmit (WR2; D5 = 0) or wait on receive (WR1; D5 = 1) can be selected.The wait operation can be enabled/disabled by setting/resetting the Wait Enable Bit (WR1; D7).

CAUTION: ANY CONDITION THAT CAN CAUSE THE TRANSMITTER TO STOP (EG, CTS GOES INACTIVE) OR THE RECEIVER TO STOP (EG, RX DATA STOPS) WILL CAUSE THE MPSC TO HANG THE CPU UP IN WAIT STATES UNTIL RESET. EXTREME CARE SHOULD BE TAKEN WHEN USING THIS FEATURE.

INTERRUPT DRIVEN OPERATION:
The MPSC can be programmed into several interrupt modes: Non-Vectored, 8085 vectored, and 8088/86 vectored. In both vectored modes, multiple MPSC's can be daisy-chained.

In the vectored mode, the MPSC responds to an interrupt acknowledge sequence by placing a call instruction (8085 mode) and interrupt vector (8085 and 8088/86 mode) on the data bus. In the non-vectored mode, the MPSC does not respond to $\overline{INTA}$ sequences and must rely on an external interrupt controller such as the 8259A.

The MPSC can be programmed to cause an interrupt due to up to 14 conditions in each channel. The status of these interrupt conditions is contained in Read Registers 0 and 1. These 14 conditions are all directed to cause 3 different types of internal interrupt request for each channel: receive/interrupts, transmit interrupts and external/status interrupts (if enabled).

This results in up to 6 internal interrupt request signals. The priority of those signals can be programmed to one of two fixed modes:

Highest Priority					Lowest Priority
RxA	RxB	TxA	TxB	ExTA	ExTB
RxA	TxA	RxB	TxB	ExTA	ExTB

The interrupt priority resolution works differently for vectored and non-vectored modes.

PRIORITY RESOLUTION: VECTORED MODE
Any interrupt condition can be accepted internally to the MPSC at any time, unless the MPSC's internal INTA signal is active, unless a higher priority interrupt is currently accepted, or if $\overline{IPI}$ is inactive (high). The MPSC's internal INTA is set on the leading (falling) edge of the first External $\overline{INTA}$ pulse and reset on the trailing (rising) edge of the second External $\overline{INTA}$ pulse. After an interrupt is accepted internally, an External $\overline{INT}$ request is generated and the $\overline{IPO}$ goes inactive. $\overline{IPO}$ and $\overline{IPI}$ are used for daisy-chaining MPSC's together.

Interrupt Condition Grouping

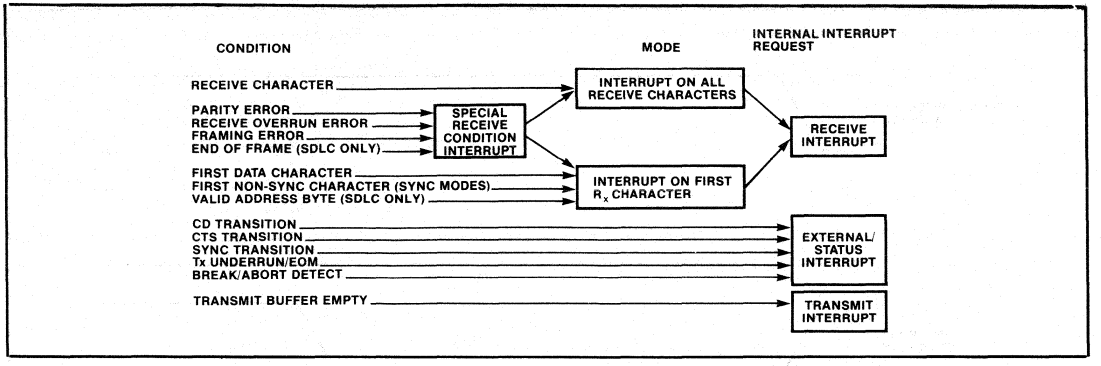

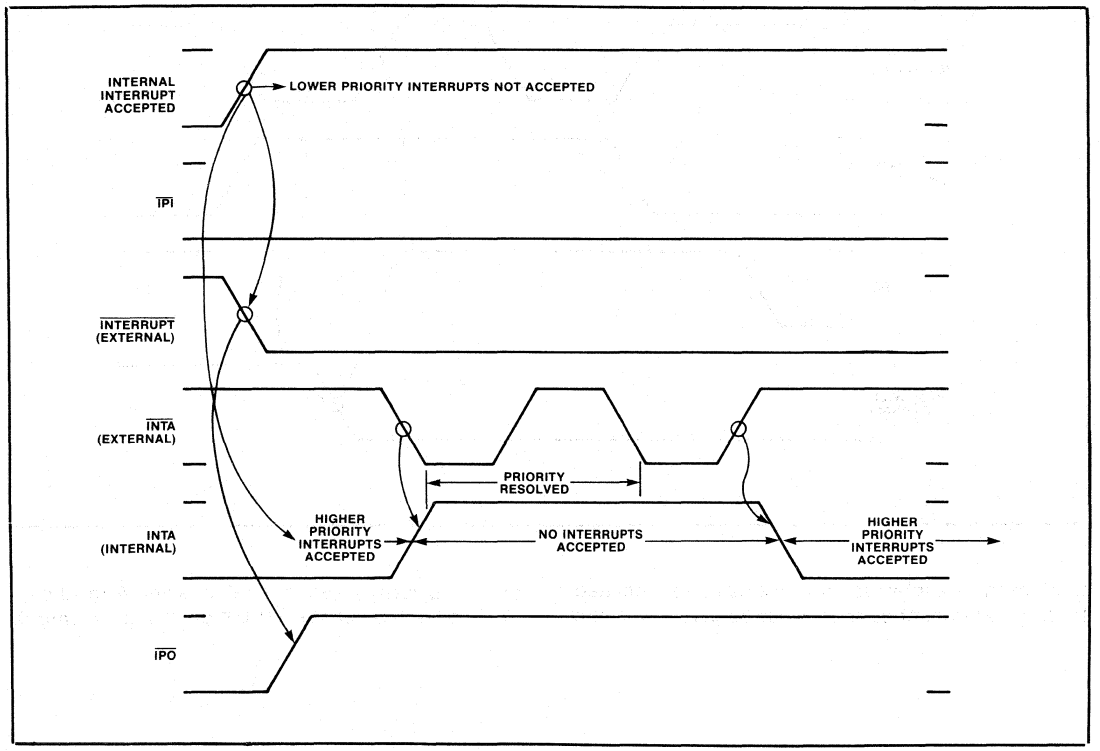

The MPSC's internal INTA is set on the leading (falling) edge of the first external $\overline{INTA}$ pulse, and reset on the trailing (rising) edge of the second external $\overline{INTA}$ pulse. After an interrupt is accepted internally, an external $\overline{INT}$ request is generated and $\overline{IPO}$ goes inactive (high). $\overline{IPO}$ and $\overline{IPI}$ are used for daisy-chaining MPSC's together.

In-Service Timing

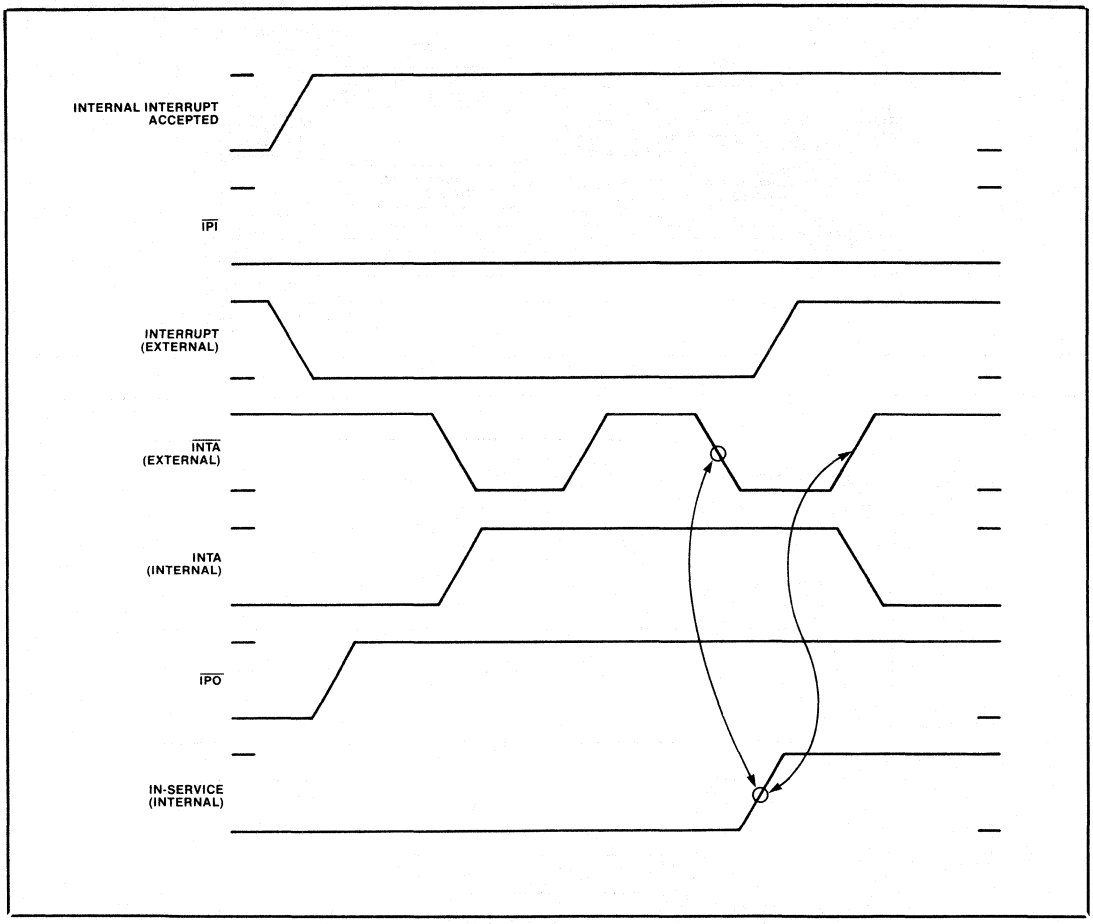

Each of the six interrupt sources has an associated In-Service latch. After priority has been resolved, the highest priority In-Service latch is set. After the In-Service latch is set, the $\overline{INT}$ pin goes inactive (high).

EOI Command Timing

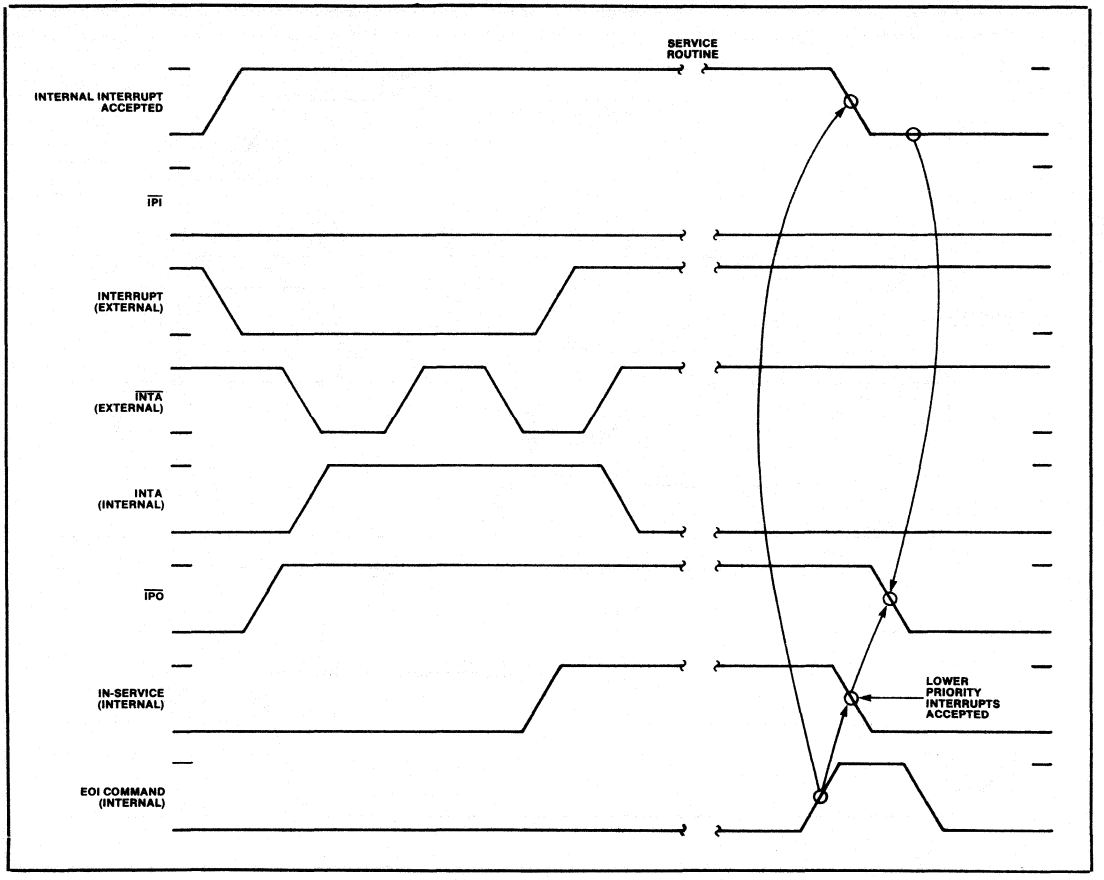

Lower priority interrupts are not accepted internally while the In-Service latch is set. However, higher priority interrupts are accepted internally and a new external $\overline{INT}$ request is generated. If the CPU responds with a new INTA sequence, the MPSC will respond as before, suspending the lower priority interrupt.

After the interrupt is serviced, the End-of-Interrupt (EOI) command should be written to the MPSC. This command will cause an internal pulse that is used to reset the In-Service Latch which allows service for lower priority interrupts in the daisy-chain to resume, provided a new INTA sequence does not start for a higher priority interrupt (higher than the highest under service). If there is no interrupt pending internally, the $\overline{IPO}$ follows $\overline{IPI}$.

Non-Vectored Interrupt Timing

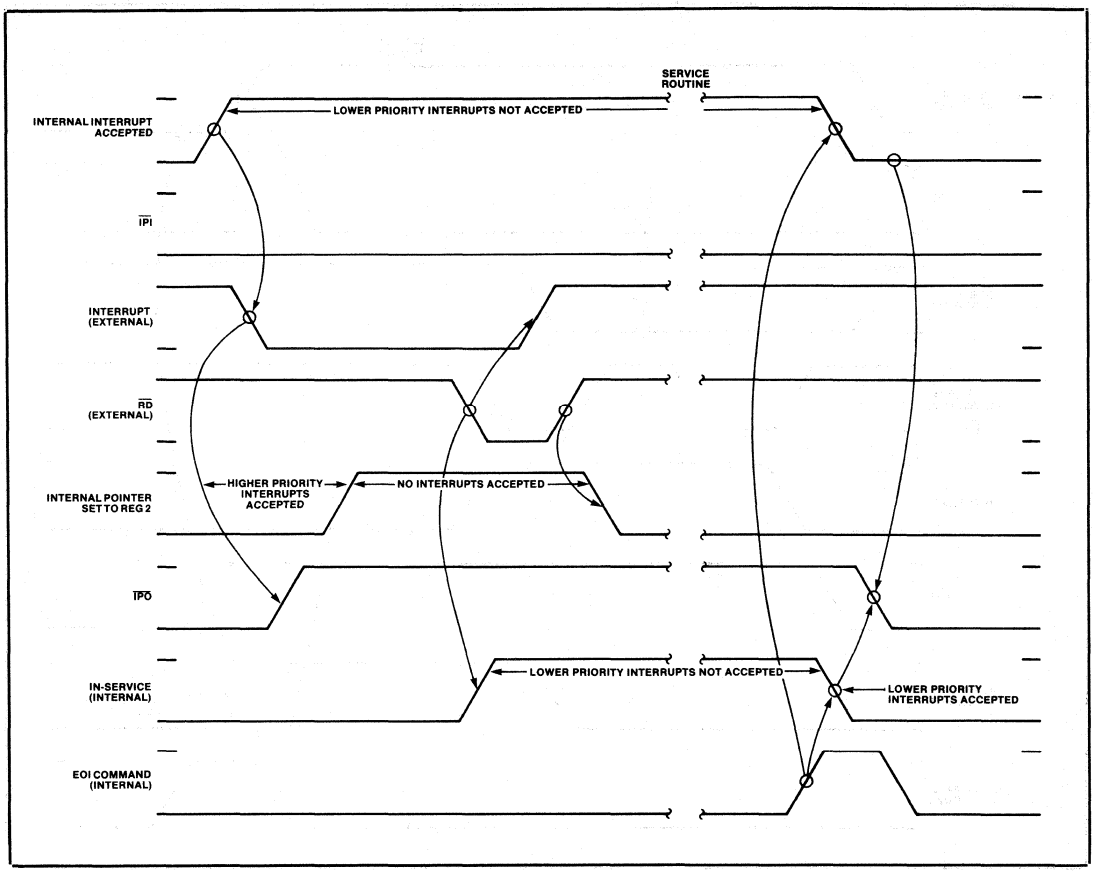

PRIORITY RESOLUTION: NON-VECTORED MODE

In non-vectored mode, the MPSC does not respond to interrupt acknowledge sequences. The MPSC should be programmed to the Status-Affects-Vector mode, and the CPU should read RR2 (Ch. B) in its service routine to determine which interrupt requires service.

In this case, the internal pointer being set to RR2 provides the same function as the internal INTA signal in the vectored mode. It inhibits acceptance of any additional internal interrupts and its leading edge starts the interrupt priority resolution circuit. The interrupt priority resolution is ended by the leading edge of the read signal used by the CPU to retrieve the modified vector. The leading edge of read sets the In-Service latch and forces the external $\overline{INT}$ output inactive (high). The internal pointer is reset to zero after the trailing edge of the read pulse.

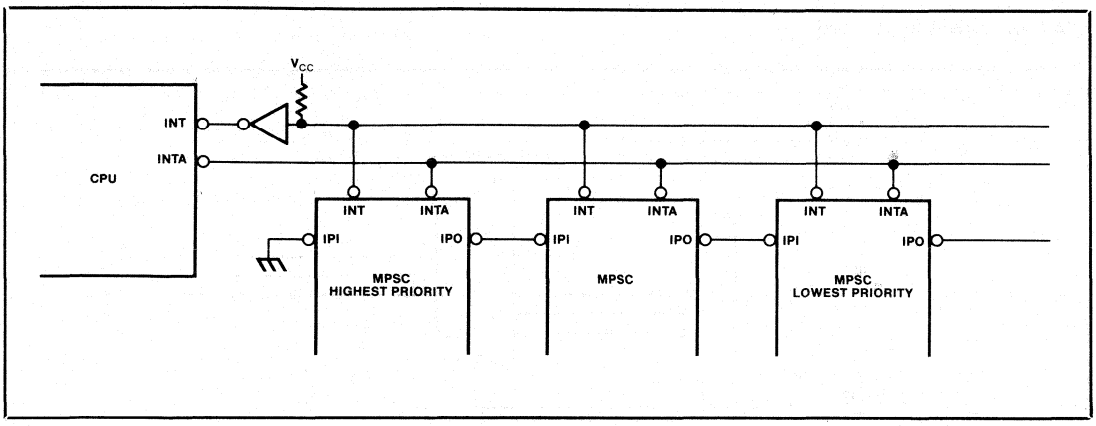

Note that if RR2 is specified but not read, no internal interrupts, regardless of priority, are accepted.

DAISY CHAINING MPSC:
In the vectored interrupt mode, multiple MPSC's can be daisy-chained on the same $\overline{INT}$, $\overline{INTA}$ signals. These signals, in conjunction with the $\overline{IPI}$ and $\overline{IPO}$ allow a daisy-chain-like interrupt resolution scheme. This scheme can be configured for either 8085 or 8086/88 based system.

In either mode, the same hardware configuration is called for. The $\overline{INT}$ request lines are wire-OR'ed together at the input of a TTL inverter which drives the INT pin of the CPU. The $\overline{INTA}$ signal from the CPU drives all of the daisy-chained MPSC's.

The MPSC drives $\overline{IPO}$ (Interrupt Priority Output) inactive (high) if $\overline{IPI}$ (Interrupt Priority Input) is inactive (high), or if the MPSC has an interrupt pending.

The $\overline{IPO}$ of the highest priority MPSC is connected to the $\overline{IPI}$ of the next highest priority MPSC, and so on.

If $\overline{IPI}$ is active (low), the MPSC knows that all higher priority MPSC's have no interrupts pending. The $\overline{IPI}$ pin of the highest priority MPSC is strapped active (low) to ensure that it always has priority over the rest.

MPSC's Daisy-chained on an 8088/86 CPU should be programmed to the 8088/86 Interrupt mode (WR2; D4, D3 (Ch. A). MPSC's Daisy-chained on an 8085 CPU should be programmed to 8085 interrupt mode 1 if it is the highest priority MPSC. In this mode, the highest priority MPSC issues the CALL instruction during the first INTA cycle, and the interrupting MPSC provides the interrupt vector during the following $\overline{INTA}$ cycles. Lower priority MPSC's should be programmed to 8085 interrupt mode 2.

MPSC's used alone in 8085 systems should be programmed to 8085 mode 1 interrupt operation.

DMA Acknowledge Circuit

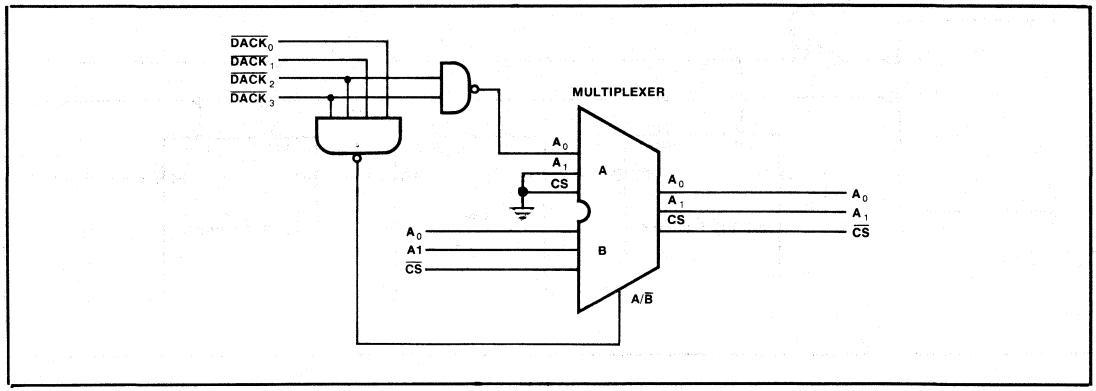

DMA Timing

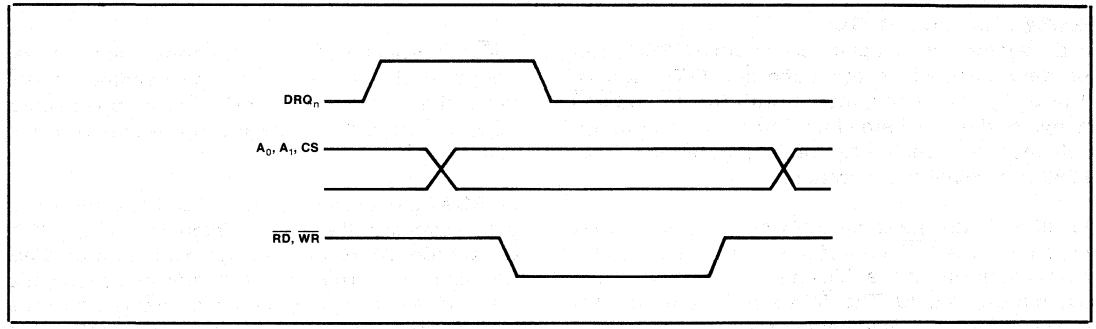

DMA OPERATION

Each MPSC can be programmed to utilize up to four DMA channels: Transmit Channel A, Receive Channel A, Transmit Channel B, Receive Channel B. Each DMA Channel has an associated DMA Request line. Acknowledgement of a DMA cycle is done via normal data read or write cycles. This is accomplished by encoding the $\overline{DACK}$ signals to generate A_0, A_1, and $\overline{CS}$ signals, and multiplexing them with the normal A_0, A_1, and $\overline{CS}$ signals.

PERMUTATIONS

Channels A and B can be used with different system interface modes. In all cases it is impossible to poll the MPSC. The following table shows the possible permutations of interupt, wait, and DAM modes for channels A and B. Bits D_1, D_0 of WR2 Ch. A determine these permutations.

Permutation WR2 Ch. A D_1 D_0	Channel A	Channel B
0 0	Wait Interrupt Polled	Wait Interrupt Polled
0 1	DMA Polled	Interrupt Polled
1 0	DMA Polled	DMA Polled

D1, D0 = 1, 1 is illegal.

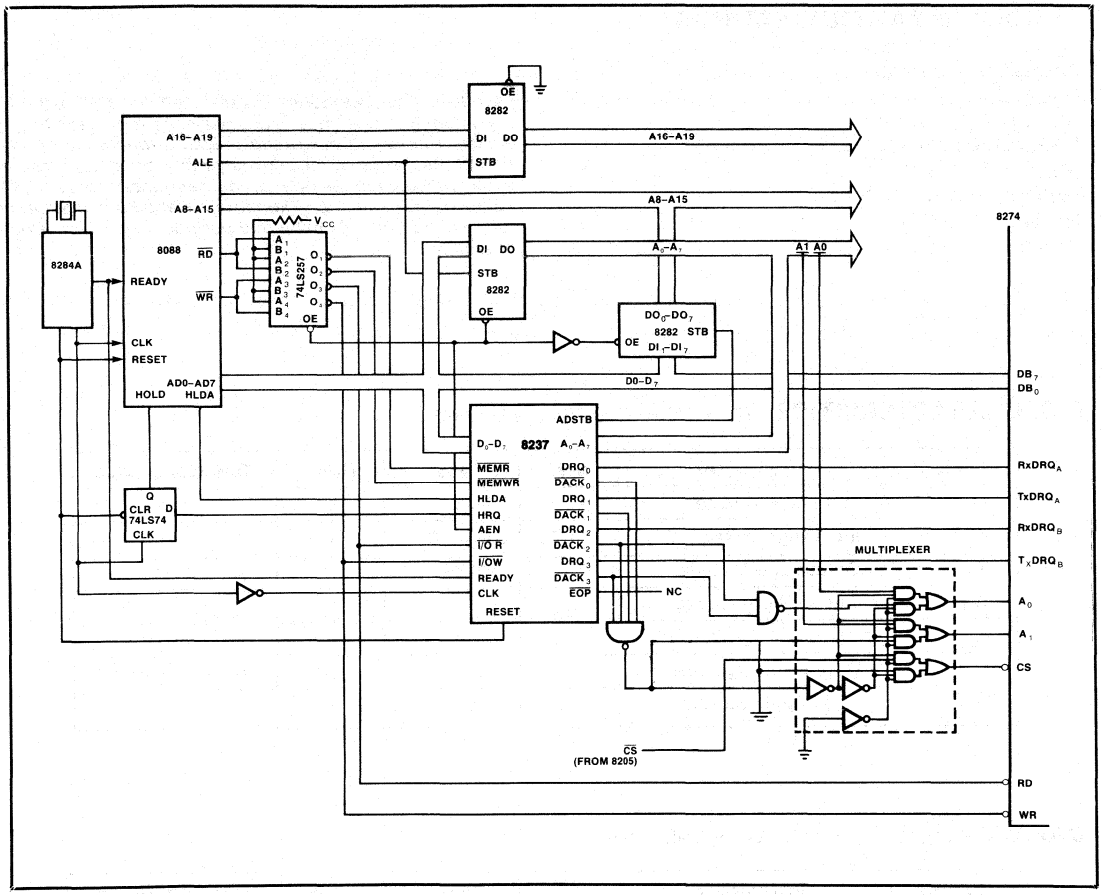
8282
OE
DI DO
STB
A16–A19
ALE
A8–A15
8088
RD
READY
WR
CLK
RESET
AD0–AD7
HOLD HLDA
8284A
VCC
74LS257
OE
DI DO
STB
8282
OE
A8–A15
A1 A0
8274
DO0–DO7
8282 STB
OE
DI1–DI7
D0–D7
DB7
DB0
ADSTB
D0–D7 8237 A0–A7
MEMR
MEMWR
HLDA
HRQ
AEN
I/O R
I/OW
READY
CLK
RESET
DRQ0
DACK0
DRQ1
DACK1
DRQ2
DACK2
DRQ3
DACK3
EOP
NC
RxDRQA
TxDRQA
RxDRQB
TxDRQB
MULTIPLEXER
A0
A1
CS
Q
CLR D
74LS74
CLK
CS
(FROM 8205)
RD
WR

AFN-01701B

ABSOLUTE MAXIMUM RATINGS*

Ambient Temperature
Under Bias ..... 0°C to +70°C
Storage Temperature
(Ceramic Package) ..... −65°C to +150°C
(Plastic Package) ..... −40°C to +125°C
Voltage On Any Pin With
Respect to Ground ..... −0.5V to +7.0V
Power Dissipation 1.5W

**NOTICE: Stresses above those listed under "Absolute Maximum Ratings" may cause permanent damage to the device. This is a stress rating only and functional operation of the device at these or any other conditions above those indicated in the operational sections of this specification is not implied. Exposure to absolute maximum rating conditions for extended periods may affect device reliability.*

D.C. CHARACTERISTICS (T_A = 0°C to 70°C; V_{CC} = +5V ±10%)

Symbol	Parameter	Min.	Max.	Units	Test Conditions
V_{IL}	Input Low Voltage	−0.5	+0.8	V	
V_{IH}	Input High Voltage	+2.0	V_{CC} +0.5	V	
V_{OL}	Output Low Voltage		+0.45	V	I_{OL} = 2.0mA
V_{OH}	Output High Voltage	+2.4		V	I_{OH} = −200μA
I_{IL}	Input Leakage Current		+10	μA	V_{IN} = V_{CC} to 0V
I_{OL}	Output Leakage Current		+10	μA	V_{OUT} = V_{CC} to 0V
I_{CC}	V_{CC} Supply Current		180	mA	

CAPACITANCE (T_A = 25°C; V_{CC} = GND = 0V)

Symbol	Parameter	Min.	Max.	Units	Test Conditions
C_{IN}	Input Capacitance		10	pF	f_c = 1 MHz;
C_{OUT}	Output Capacitance		15	pF	Unmeasured
$C_{I/O}$	Input/Output Capacitance		20	pF	pins returned to GND

A.C. CHARACTERISTICS (T_A = 0°C to 70°C; V_{CC} = +5V ±10%)

Symbol	Parameter	Min.	Max.	Units	Test Conditions
t_{CY}	CLK Period	250	4000	ns	
t_{CL}	CLK Low Time	105	2000	ns	
t_{CH}	CLK High Time	105	2000	ns	
t_r	CLK Rise Time	0	30	ns	
t_f	CLK Fall Time	0	30	ns	
t_{AR}	A0, A1 Setup to $\overline{RD}\downarrow$	0		ns	
t_{AD}	A0, A1 to Data Output Delay		200	ns	C_L=150 pf
t_{RA}	A0, A1 Hold After $\overline{RD}\uparrow$	0		ns	
t_{RD}	$\overline{RD}\downarrow$ to Data Output Delay		200	ns	C_L=150 pf
t_{RR}	$\overline{RD}$ Pulse Width	250		ns	
t_{DF}	Output Float Delay		120	ns	
t_{AW}	$\overline{CS}$, A0, A1 Setup to $\overline{WR}\downarrow$	0		ns	
t_{WA}	$\overline{CS}$, A0, A1 Hold after $\overline{WR}\uparrow$	0		ns	
t_{WW}	$\overline{WR}$ Pulse Width	250		ns	
t_{DW}	Data Setup to $\overline{WR}\uparrow$		150	ns	
t_{WD}	Data Hold After $\overline{WR}\uparrow$	0		ns	
t_{PI}	$\overline{IPI}$ Setup to $\overline{INTA}\downarrow$	0		ns	
t_{IP}	$\overline{IPI}$ Hold after $\overline{INTA}\uparrow$	0		ns	
t_{II}	$\overline{INTA}$ Pulse Width	250		ns	
t_{IAPO}	$\overline{INTA}\downarrow$ to $\overline{IPO}$ Delay		200	ns	
t_{PIPO}	$\overline{IPI}\downarrow$ to $\overline{IPO}$ Delay		100	ns	
t_{ID}	$\overline{INTA}\downarrow$ to Data Output Delay		200	ns	
t_{CQ}	$\overline{RD}$ or $\overline{WR}$ to DRQ$\downarrow$		150	ns	
t_{RV}	Recovery Time Between Controls	300		ns	
t_{CW}	$\overline{CS}$, A0, A1 to $\overline{RDY_A}$ or $\overline{RDY_B}$ Delay		120	ns	
t_{DCY}	Data Clock Cycle	4.5 t_{CY}		ns	
t_{DCL}	Data Clock Low Time	180		ns	
t_{DCH}	Data Clock High Time	180		ns	
t_{TD}	$\overline{TxC}$ to TxD Delay		300	ns	
t_{DS}	RxD Setup to $\overline{RxC}\uparrow$	0		ns	
t_{DH}	RxD Hold after $\overline{RxC}\uparrow$	140		ns	
t_{ITD}	$\overline{TxC}$ to $\overline{INT}$ Delay	4	6	tcy	
t_{IRD}	RxC to $\overline{INT}$ Delay	7	10	tcy	
t_{PL}	$\overline{CTS}$, $\overline{CD}$, $\overline{SYNDET}$ Low Time	200		ns	
t_{PH}	$\overline{CTS}$, $\overline{CD}$, $\overline{SYNDET}$ High Time	200		ns	
t_{IPD}	External $\overline{INT}$ from $\overline{CTS}$, $\overline{CD}$, $\overline{SYNDET}$		500	ns	

A.C. TESTING INPUT, OUTPUT WAVEFORM

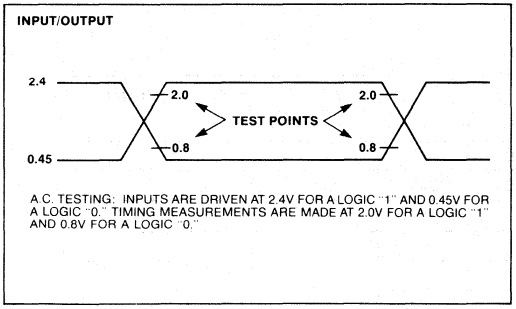

A.C. TESTING LOAD CIRCUIT

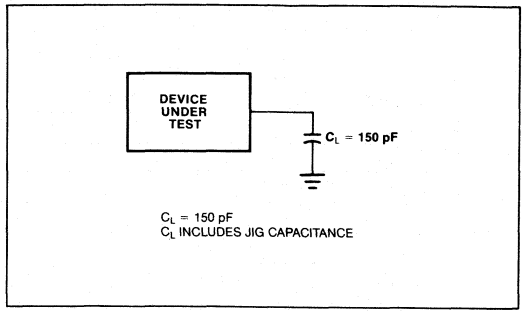

WAVEFORMS

CLOCK CYCLE

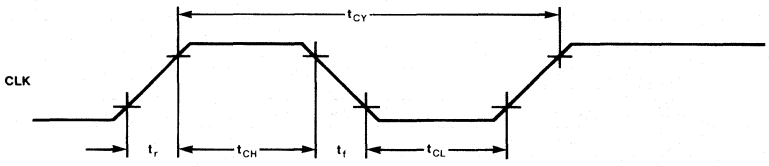

READ CYCLE

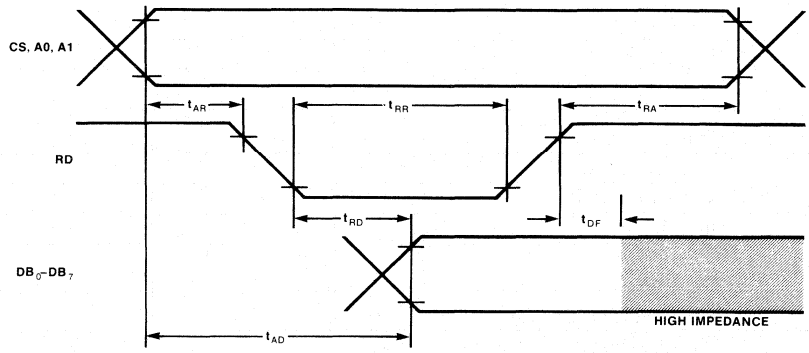

WAVEFORMS (Continued)

WRITE CYCLE

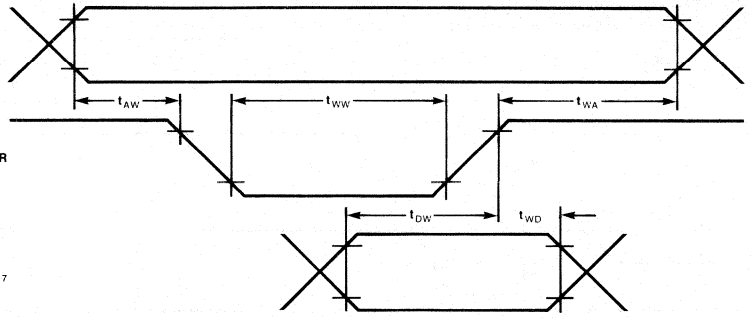

INTA CYCLE

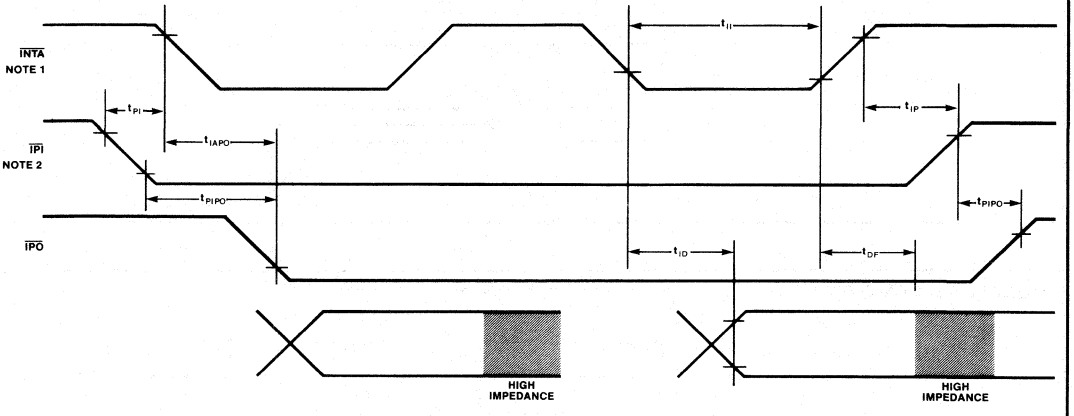

DMA CYCLE

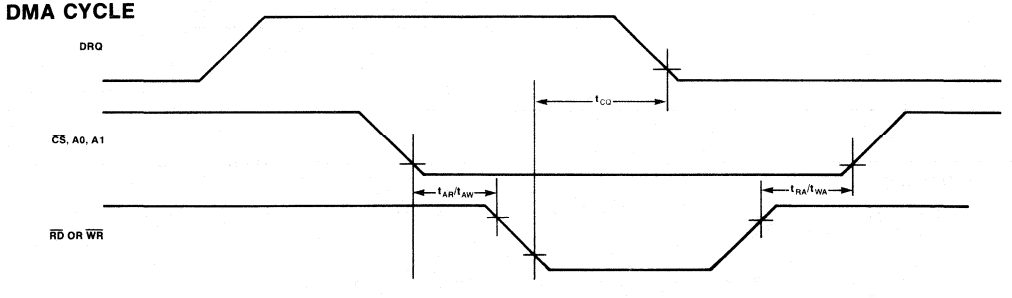

NOTES:
1. INTA signal acts as RD signal.
2. IPI signal acts as CS signal.

WAVEFORMS (Continued)

READ/WRITE CYCLE (SOFTWARE POLLED MODE)

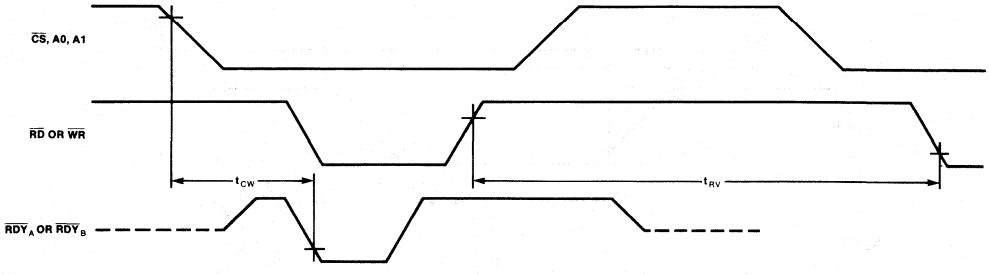

TRANSMIT DATA CYCLE

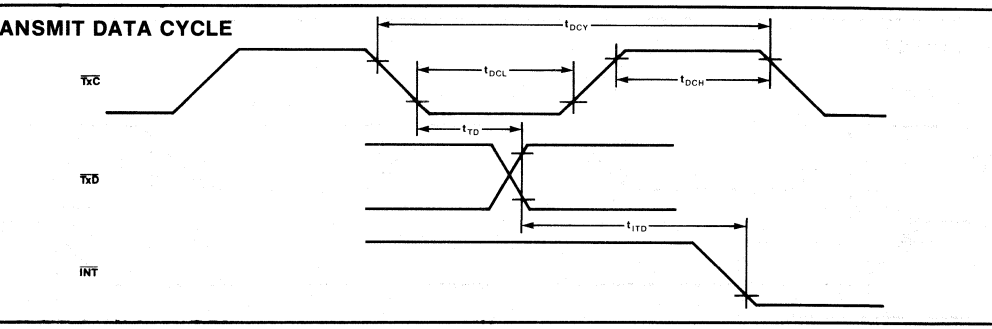

RECEIVE DATA CYCLE

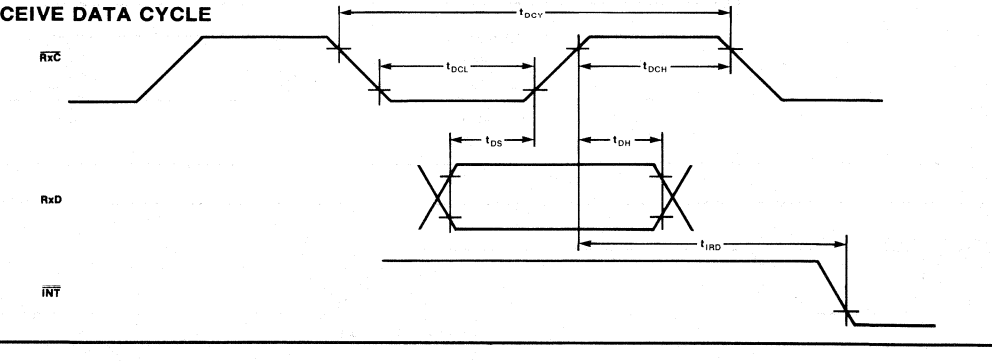

OTHER TIMING

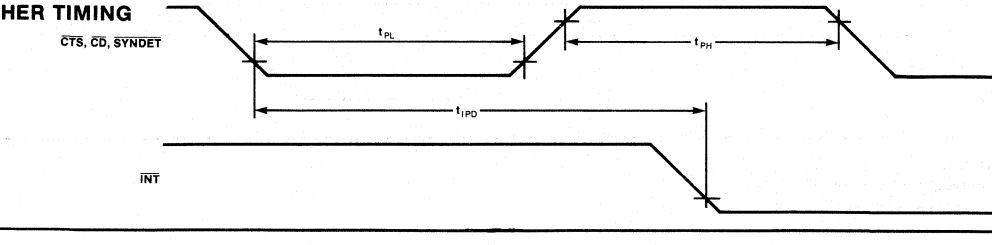

AFN-01701B

8291A
GPIB TALKER/LISTENER

- Designed to Interface Microprocessors (e.g., 8048/49, 8051, 8080/85, 8086/88) to an IEEE Standard 488 Digital Interface Bus
- Programmable Data Transfer Rate
- Complete Source and Acceptor Handshake
- Complete Talker and Listener Functions with Extended Addressing
- Service Request, Parallel Poll, Device Clear, Device Trigger, Remote/Local Functions
- Selectable Interrupts
- On-Chip Primary and Secondary Address Recognition
- Automatic Handling of Addressing and Handshake Protocol
- Provision for Software Implementation of Additional Features
- 1–8 MHz Clock Range
- 16 Registers (8 Read, 8 Write), 2 for Data Transfer, the Rest for Interface Function Control, Status, etc.
- Directly Interfaces to External Non-Inverting Transceivers for Connection to the GPIB
- Provides Three Addressing Modes, Allowing the Chip to be Addressed Either as a Major or a Minor Talker/Listener with Primary or Secondary Addressing
- DMA Handshake Provision Allows for Bus Transfers without CPU Intervention
- Trigger Output Pin
- On-Chip EOS (End of Sequence) Message Recognition Facilitates Handling of Multi-Byte Transfers

The 8291A is an enhanced version of the 8291 GPIB Talker/Listener designed to interface microprocessors to an IEEE Standard 488 Instrumentation Interface Bus. It implements all of the Standard's interface functions except for the controller. The controller function can be added with the 8292 GPIB Controller, and the 8293 GPIB Transceiver performs the electrical interface for Talker/Listener and Talker/Listener/Controller configurations.

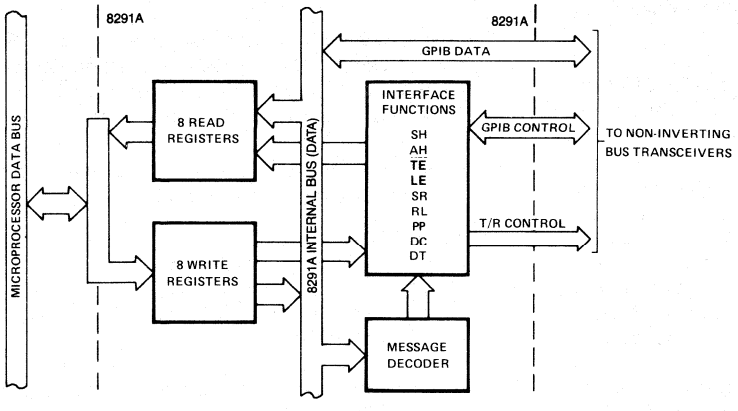

Figure 1. Block Diagram

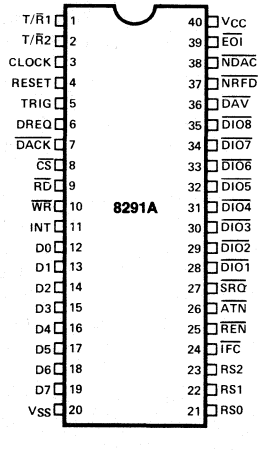

Figure 2. Pin Configuration

8291A FEATURES AND IMPROVEMENTS

The 8291A is an improved design of the 8291 GPIB Talker/Listener. Most of the functions are identical to the 8291, and the pin configuration is unchanged.

The 8291A offers the following improvements to the 8291:

1. $\overline{EOI}$ is active with the data as a ninth data bit rather than as a control bit. This is to comply with some additions to the 1975 IEEE-488 Standard incorporated in the 1978 Standard.

2. The BO interrupt is not asserted until RFD is true. If the Controller asserts $\overline{ATN}$ synchronously, the data is guaranteed to be transmitted. If the Controller asserts $\overline{ATN}$ asynchronously, the SH (Source Handshake) will return to SIDS (Source Idle State), and the output data will be cleared. The, if $\overline{ATN}$ is released while the 8291A is addressed to talk, a new BO interrupt will be generated. This change fixes 8291 problems which caused data to be lost or repeated and a problem with the RQS bit (sometimes cannot be asserted while talking).

3. LLOC and REMC interrupts are setting flipflops rather than toggling flipflops in the interrupt backup register. This ensures that the CPU knows that these state changes have occurred. The actual state can be determined by checking the LLO and REM status bits in the upper nibble of the Interrupt Status 2 Register.

4. DREQ is cleared by $\overline{DACK}$ ($\overline{RD}$ + $\overline{WR}$). DREQ on the 8291 was cleared only by $\overline{DACK}$ which is not compatible with the 8089 I/O Processor.

5. The INT bit in Interrupt Status 2 Register is duplicated in bit 7 of the Address 0 Register. If software polling is used to check for an interrupt, INT in the Address 0 Register should be polled rather than the Interrupt Status 2 Register. This ensures that no interrupts are lost due to asynchronous status reads and interrupts.

6. The 8291A's Send $\overline{EOI}$ Auxiliary Command works on any byte including the first byte of a message. The 8291 did not assert $\overline{EOI}$ after this command for a one byte message nor on two consecutive bytes.

7. To avoid confusion between holdoff on DAV versus RFD if a device is readdressed from a talker to a listener role or vice-versa during a holdoff, the "Holdoff on Source Handshake" has been eliminated. Only "Holdoff on Acceptor Handshake" is available.

8. The rsv local message is cleared automatically upon exit from SPAS if (APRS.STRS.SPAS) occurred. The automatic resetting of the bit after the serial poll is complete simplifies the service request software.

9. The SPASC interrupt on the 8291 has been replaced by the SPC (Serial Poll Complete) interrupt on the 8291A. SPC interrupt is set on exit from SPAS if APRS.STRS.SPAS occurred, indicating that the controller has read the bus status byte after the 8291A requested service. The SPASC interrupt was ambiguous because a controller could enter SPAS and exit SPAS generating two SPASC interrupts without reading the serial poll status byte. The SPC interrupt also simplifies the CPU's software by eliminating the interrupt when the serial poll is half way done.

10. The rtl Auxiliary Command in the 8291 has been replaced by Set and Clear rtl Commands in the 8291A. Using the new commands, the CPU has the flexibility to extend the length of local mode or leave it as a short pulse as in the 8291.

11. A holdoff RFD on GET, SDC, and DCL feature has been added to prevent additional bus activity while the CPU is responding to any of these commands. The feature is enabled by a new bit (B_4) in the Auxiliary Register B.

12. On the 8291, BO could cease to occur upon $\overline{IFC}$ going false if $\overline{IFC}$ occurred asynchronously. On the 8291A, BO continues to occur after $\overline{IFC}$ has gone false even if it arrived asynchronously.

13. User's software can distinguish between the 8291 and the 8291A as follows:

    a) pon (00H to register 5)
    b) RESET (02H to register 5)
    c) Read Interrupt Status 1 Register. If BO interrupt is set, the device is the 8291. If BO is clear, it is the 8291A.

    This can be used to set a flag in the user's software which will permit special routines to be executed for each device. It could be included as part of a normal initialization procedure as the first step after a chip reset.

Table 1. Pin Description

Symbol	Pin No.	Type	Name and Function
D_0–D_7	12–19	I/O	**Data Bus Port:** To be connected to microprocessor data bus.
RS_0–RS_2	21–23	I	**Register Select:** Inputs, to be connected to three non-multiplexed microprocessor address bus lines. Select which of the 8 internal read (write) registers will be read from (written into) with the execution of $\overline{RD}$ ($\overline{WR}$.)
$\overline{CS}$	8	I	**Chip Select:** When low, enables reading from or writing into the register selected by RS_0–RS_2.
$\overline{RD}$	9	I	**Read Strobe:** When low with $\overline{CS}$ or $\overline{DACK}$ low, selected register contents are read.
$\overline{WR}$	10	I	**Write Strobe:** When low with $\overline{CS}$ or $\overline{DACK}$ low, data is written into the selected register.
INT ($\overline{INT}$)	11	O	**Interrupt Request:** To the microprocessor, set high for request and cleared when the appropriate register is accessed by the CPU. May be software configured to be active low.
DREQ	6	O	**DMA Request:** Normally low, set high to indicate byte output or byte input in DMA mode; reset by $\overline{DACK}$.
$\overline{DACK}$	7	I	**DMA Acknowledge:** When low, resets DREQ and selects data in/data out register for DMA data transfer (actual transfer done by $\overline{RD}$/$\overline{WR}$ pulse). Must be high if DMA is not used.
TRIG	5	O	**Trigger Output:** Normally low; generates a triggering pulse with 1 μsec min. width in response to the GET bus command or Trigger auxillary command.
CLOCK	3	I	**External Clock:** Input, used only for T_1 delay generator. May be any speed in 1–8 MHz range.

Symbol	Pin No.	Type	Name and Function
RESET	4	I	**Reset Input:** When high, forces the device into an "idle" (initialization) mode. The device will remain at "idle" until released by the microprocessor, with the "Immediate Execute pon" local message.
$\overline{DIO_1}$–$\overline{DIO_8}$	28–35	I/O	**8-Bit GPIB Data Port:** Used for bidirectional data byte transfer between 8291A and GPIB via non-inverting external line transceivers.
$\overline{DAV}$	36	I/O	**Data Valid:** GPIB handshake control line. Indicates the availability and validity of information on the $\overline{DIO_1}$–$\overline{DIO_8}$ and $\overline{EOI}$ lines.
$\overline{NRFD}$	37	I/O	**Not Ready for Data:** GPIB handshake control line. Indicates the condition of readiness of device(s) connected to the bus to accept data.
$\overline{NDAC}$	38	I/O	**Not Data Accepted:** GPIB handshake control line. Indicates the condition of acceptance of data by the device(s) connected to the bus.
$\overline{ATN}$	26	I	**Attention:** GPIB command line. Specifies how data on $\overline{DIO}$ lines are to be interpreted.
$\overline{IFC}$	24	I	**Interface Clear:** GPIB command line. Places the interface functions in a known quiescent state.
$\overline{SRQ}$	27	O	**Service Request:** GPIB command line. Indicates the need for attention and requests an interruption of the current sequence of events on the GPIB.
$\overline{REN}$	25	I	**Remote Enable:** GPIB command line. Selects (in conjunction with other messages) remote or local control of the device.
$\overline{EOI}$	39	I/O	**End or Identify:** GPIB command line. Indicates the end of a multiple byte transfer sequence or, in conjunction with $\overline{ATN}$, addresses the device during a polling sequence.

Table 1. Pin Description (Continued)

Symbol	Pin No.	Type	Name and Function
T/$\overline{R}$1	1	O	**External Transceivers Control Line:** Set high to indicate output data/signals on the $\overline{DIO_1}$–$\overline{DIO_8}$ and $\overline{DAV}$ lines and input signals on the $\overline{NRFD}$ and $\overline{NDAC}$ lines (active source handshake). Set low to indicate input data/signals on the $\overline{DIO_1}$–$\overline{DIO_8}$ and $\overline{DAV}$ lines and output signals on the $\overline{NRFD}$ and $\overline{NDAC}$ lines (active acceptor handshake).
T/$\overline{R}$2	2	O	**External Transceivers Control Line:** Set to indicate output signals on the $\overline{EOI}$ line. Set low to indicate expected input signal on the $\overline{EOI}$ line during parallel poll.
V_{CC}	40	P.S.	**Positive Power Supply:** (5V ±10%).
GND	20	P.S.	**Circuit Ground Potential.**

NOTE:
All signals on the 8291A pins are specified with positive logic. However, IEEE 488 specifies negative logic on its 16 signal lines. Thus, the data is inverted once from D_0–D_7 to $\overline{DIO_0}$–$\overline{DIO_8}$ and non-inverting bus transceivers should be used.

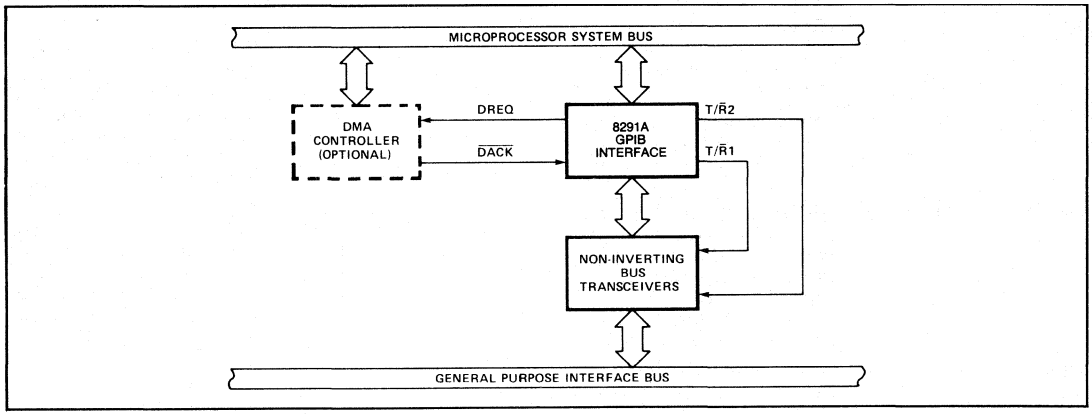

Figure 3. 8291A System Diagram

THE GENERAL PURPOSE INTERFACE BUS (GPIB)

The General Purpose Interface Bus (GPIB) is defined in the IEEE Standard 488-1978 "Digital Interface for Programmable Instrumentation." Although a knowledge of this standard is assumed, Figure 4 provides the bus structure for quick reference. Also, Tables 2 and 3 reference the interface state mnemonics and the interface messages respectively. Modified state diagrams for the 8291A are presented in Appendix A.

General Description

The 8291A is a microprocessor-controlled device designed to interface microprocessors, e.g., 8048/49, 8051, 8080/85, 8086/88 to the GPIB. It implements all of the interface functions defined in the IEEE-488 Standard except for the controller function. If an implementation of the Standard's Controller is desired, it can be connected with an Intel® 8292 to form a complete interface.

The 8291A handles communication between a microprocessor-controlled device and the GPIB. Its capabilities include data transfer, handshake protocol, talker/listener addressing procedures, device clearing and triggering, service request, and both serial and parallel polling. In most procedures, it does not disturb the microprocessor unless a byte has arrived (input buffer full) or has to be sent out (output buffer empty).

The 8291A architecture includes 16 registers. Eight of these registers may be written into by the microprocessor. The other eight registers may be read by the microprocessor. One each of these read and

write registers is for direct data transfers. The rest of the write registers control the various features of the chip, while the rest of the read registers provide the microprocessor with a monitor of GPIB states, various bus conditions, and device conditions.

GPIB Addressing

Each device connected to the GPIB must have at least one address whereby the controller device in charge of the bus can configure it to talk, listen, or send status. An 8291A implementation of the GPIB offers the user three alternative addressing modes for which the device can be initialized for each application. The first of these modes allows for the device to have two separate primary addresses. The second mode allows the user to implement a single talker/listener with a two byte address (primary address + secondary address). The third mode again allows for two distinct addresses but in this instance, they can each have a ten-bit address (5 low-order bits of each of two bytes). However, this mode requires that the secondary addresses be passed to the microprocessor for verification. These three addressing schemes are described in more detail in the discussion of the Address Registers.

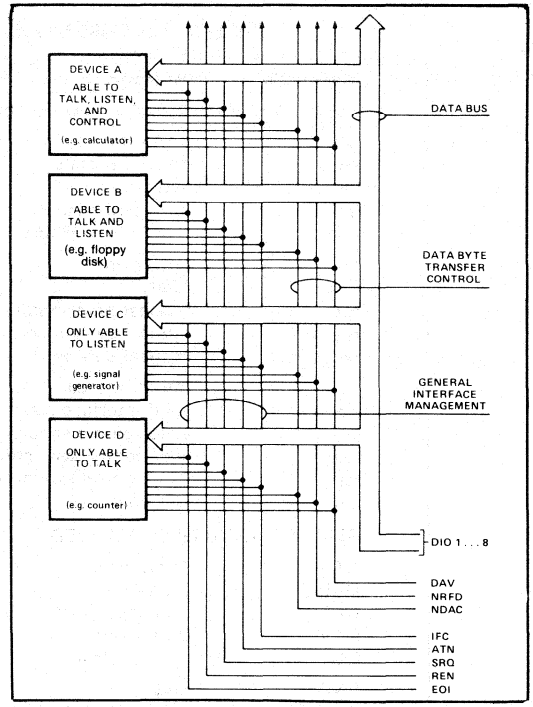

Figure 4. Interface Capabilities and Bus Structure

Table 2. IEEE 488 Interface State Mnemonics

Mnemonic	State Represented
ACDS	Accept Data State
ACRS	Acceptor Ready State
AIDS	Acceptor Idle State
ANRS	Acceptor Not Ready State
APRS	Affirmative Poll Response State
AWNS	Acceptor Wait for New Cycle State
CACS	Controller Active State *
CADS	Controller Addressed State
CAWS	Controller Active Wait State
CIDS	Controller Idle State
CPPS	Controller Parallel Poll State
CPWS	Controller Parallel Poll Wait State
CSBS	Controller Standby State
CSNS	Controller Service Not Requested State
CSRS	Controller Service Requested State
CSWS	Controller Synchronous Wait State
CTRS	Controller Transfer State
DCAS	Device Clear Active State
DCIS	Device Clear Idle State
DTAS	Device Trigger Active State
DTIS	Device Trigger Idle State
LACS	Listener Active State
LADS	Listener Addressed State
LIDS	Listener Idle State
LOCS	Local State
LPAS	Listener Primary Addressed State
LPIS	Listener Primary Idle State
LWLS	Local With Lockout State
NPRS	Negative Poll Response State

Mnemonic	State Represented
PACS	Parallel Poll Addressed to Configure State
PPAS	Parallel Poll Active State
PPIS	Parallel Poll Idle State
PPSS	Parallel Poll Standby State
PUCS	Parallel Poll Unaddressed to Configure State
REMS	Remote State
RWLS	Remote With Lockout State
SACS	System Control Active State
SDYS	Source Delay State
SGNS	Source Generate State
SIAS	System Control Interface Clear Active State
SIDS	Source Idle State
SIIS	System Control Interface Clear Idle State
SINS	System Control Interface Clear Not Active State
SIWS	Source Idle Wait State
SNAS	System Control Not Active State
SPAS	Serial Poll Active State
SPIS	Serial Poll Idle State
SPMS	Serial Poll Mode State
SRAS	System Control Remote Enable Active State
SRIS	System Control Remote Enable Idle State
SRNS	System Control Remote Enable Not Active State
SRQS	Service Request State
STRS	Source Transfer State
SWNS	Source Wait for New Cycle State
TACS	Talker Active State
TADS	Talker Addressed State
TIDS	Talker Idle State
TPIS	Talker Primary Idle State

*The Controller function is implemented on the Intel® 8292.

Table 3. IEEE 488 Interface Message Reference List

Mnemonic	Message	Interface Function(s)
LOCAL MESSAGES RECEIVED (By Interface Functions)		
[1]gts	go to standby	C
ist	individual status	PP
lon	listen only	L, LE
lpe	local poll enable	PP
nba	new byte available	SH
pon	power on	SH,AH,T,TE,L,LE,SR,RL,PP,C
rdy	ready	AH
[1]rpp	request parallel poll	C
[1]rsc	request system control	C
rsv	request service	SR
rtl	return to local	RL
[1]sic	send interface clear	C
[1]sre	send remote enable	C
[1]tca	take control asynchronously	C
[1]tcs	take control synchronously	AH, C
ton	talk only	T, TE
REMOTE MESSAGES RECEIVED		
ATN	Attention	SH,AH,T,TE,L,LE,PP,C
DAB	Data Byte	(Via L, LE)
DAC	Data Accepted	SH
DAV	Data Valid	AH
DCL	Device Clear	DC
END	End	(via L, LE)
GET	Group Execute Trigger	DT
GTL	Go to Local	RL
IDY	Identify	L,LE,PP
IFC	Interface Clear	T,TE,L,LE,C
LLO	Local Lockout	RL
MLA	My Listen Address	L,LE,RL,T,TE
MSA	My Secondary Address	TE,LE,RL
MTA	My Talk Address	T,TE,L,LE
OSA	Other Secondary Address	TE
OTA	Other Talk Address	T, TE
PCG	Primary Command Group	TE,LE,PP
[2]PPC	Parallel Poll Configure	PP
[2][PPD]	Parallel Poll Disable	PP
[2][PPE]	Parallel Poll Enable	PP
[1]PPR_N	Parallel Poll Response N	(via C)
[2]PPU	Parallel Poll Unconfigure	PP
REN	Remote Enable	RL
RFD	Ready for Data	SH
RQS	Request Service	(via L, LE)
[SDC]	Select Device Clear	DC
SPD	Serial Poll Disable	T, TE
SPE	Serial Poll Enable	T, TE
[1]SQR	Service Request	(via C)
STB	Status Byte	(via L, LE)
[1]TCT or [TCT]	Take Control	C
UNL	Unlisten	L, LE

NOTE:
1. These messages are handled only by Intel's 8292.
2. Undefined commands which may be passed to the microprocessor.

Table 3. (Cont'd)
IEEE 488 Interface Message Reference List

Mnemonic	Message	[3]Interface Function(s)
REMOTE MESSAGES SENT		
ATN	Attention	C
DAB	Data Byte	(via T, TE)
DAC	Data Accepted	AH
DAV	Data Valid	SH
DCL	Device Clear	(via C)
END	End	(via T)
GET	Group Execute Trigger	(via C)
GTL	Go to Local	(via C)
IDY	Identify	C
IFC	Interface Clear	C
LLO	Local Lockout	(via C)
MLA or [MLA]	My Listen Address	(via C)
MSA or [MSA]	My Secondary Address	(via C)
MTA or [MTA]	My Talk Address	(via C)
OSA	Other Secondary Address	(via C)
OTA	Other Talk Address	(via C)
PCG	Primary Command Group	(via C)
PPC	Parallel Poll Configure	(via C)
[PPD]	Parallel Poll Disable	(via C)
[PPE]	Parallel Poll Enable	(via C)
PPR_N	Parallel Poll Response N	PP
PPU	Parallel Poll Unconfigure	(via C)
REN	Remote Enable	C
RFD	Ready for Data	AH
RQS	Request Service	T, TE
[SDC]	Selected Device Clear	(via C)
SPD	Serial Poll Disable	(via C)
SPE	Serial Poll Enable	(via C)
SRQ	Service Request	SR
STB	Status Byte	(via T, TE)
TCT	Take Control	(via C)
UNL	Unlisten	(via C)

NOTE:
3. All Controller messages must be sent via Intel's 8292.

8291A Registers

A bit-by-bit map of the 16 registers on the 8291A is presented in Figure 5. A more detailed explanation of each of these registers and their functions follows. The access of these registers by the microprocessor is accomplished by using the $\overline{CS}$, $\overline{RD}$, $\overline{WR}$, and RS_0-RS_2 pins.

Register	$\overline{CS}$	$\overline{RD}$	$\overline{WR}$	RS_0-RS_2
All Read Registers	0	0	1	CCC
All Write Registers	0	1	0	CCC
High Impedance	1	d	d	ddd

Data Registers

DI7	DI6	DI5	DI4	DI3	DI2	DI1	DI0

DATA-IN REGISTER (0R)

DO7	DO6	DO5	DO4	DO3	DO2	DO1	DO0

DATA-OUT REGISTER (0W)

The Data-In Register is used to move data from the GPIB to the microprocessor or to memory when the 8291A is addressed to listen. Incoming information is separately latched by this register, and its contents are not destroyed by a write to the data-out

register. The RFD (Ready for Data) message is held false until the byte is removed from the data in register, either by the microprocessor or by DMA. The 8291A then completes the handshake automatically. In RFD holdoff mode (see Auxiliary Register A), the handshake is not finished until a command is sent telling the 8291A to release the holdoff. In this way, the same byte may be read seveal times, or an over anxious talker may be held off until all available data has been processed.

When the 8291A is addressed to talk, it uses the data-out register to move data onto the GPIB. After the BO interrupt is received and a byte is written to this register, the 8291A initiates and completes the handshake while sending the byte out over the bus. In the BO interrupt disable mode, the user should wait until BO is active before writing to the register. (In the DMA mode, this will happen automatically.) A read of the Data-In Register does not destroy the information in the Data-Out Register.

Interrupt Registers

CPT	APT	GET	END	DEC	ERR	BO	BI

INTERRUPT STATUS 1 (1R)

INT	SPAS	LLO	REM	SPC	LLOC	REMC	ADSC

INTERRUPT STATUS 2 (2R)

CPT	APT	GET	END	DEC	ERR	BO	BI

INTERRUPT ENABLE 1 (1W)

0	0	DMAO	DMAI	SPC	LLOC	REMC	ADSC

INTERRUPT ENABLE 2 (2W)

INT	DT0	DL0	AD5-0	AD4-0	AD3-0	AD2-0	AD1-0

ADDRESS 0 REGISTER

Figure 5. 8291A Registers

READ REGISTERS								RS2	RS1	RS0	WRITE REGISTERS							
DI7	DI6	DI5	DI4	DI3	DI2	DI1	DI0	0	0	0	DO7	DO6	DO5	DO4	DO3	DO2	DO1	DO0
DATA IN											DATA OUT							
CPT	APT	GET	END	DEC	ERR	BO	BI	0	0	1	CPT	APT	GET	END	DEC	ERR	BO	BI
INTERRUPT STATUS 1											INTERRUPT ENABLE 1							
INT	SPAS	LLO	REM	SPC	LLOC	REMC	ADSC	0	1	0	0	0	DMAO	DMAI	SPC	LLOC	REMC	ADSC
INTERRUPT STATUS 2											INTERRUPT ENABLE 2							
S8	SRQS	S6	S5	S4	S3	S2	S1	0	1	1	S8	rsv	S6	S5	S4	S3	S2	S1
SERIAL POLL STATUS											SERIAL POLL MODE							
ton	lon	EOI	LPAS	TPAS	LA	TA	MJMN	1	0	0	TO	LO	0	0	0	0	ADM1	ADM0
ADDRESS STATUS											ADDRESS MODE							
CPT7	CPT6	CPT5	CPT4	CPT3	CPT2	CPT1	CPT0	1	0	1	CNT2	CNT1	CNT0	COM4	COM3	COM2	COM1	COM0
COMMAND PASS THROUGH											AUX MODE							
INT	DT0	DL0	AD5-0	AD4-0	AD3-0	AD2-0	AD1-0	1	1	0	ARS	DT	DL	AD5	AD4	AD3	AD2	AD1
ADDRESS 0											ADDRESS 0/1							
X	DT1	DL1	AD5-1	AD4-1	AD3-1	AD2-1	AD1-1	1	1	1	EC7	EC6	EC5	EC4	EC3	EC2	EC1	EC0
ADDRESS 1											EOS							

The 8291A can be configured to generate an interrupt to the microprocessor upon the occurrence of any of 12 conditions or events on the GPIB. Upon receipt of an interrupt, the microprocessor must read the Interrupt Status Registers to determine which event has occurred, and then execute the appropriate service routine (if necessary). Each of the 12 interrupt status bits has a matching enable bit in the interrupt enable registers. These enable bits are used to select the events that will cause the INT pin to be asserted. Writing a logic "1" into any of these bits enables the corresponding interrupt status bits to generate an interrupt. Bits in the Interrupt Status Registers are set regardless of the states of the enable bits. The Interrupt Status Registers are then cleared upon being read or when a local pon (power-on) message is executed. If an event occurs while one of the Interrupt Status Registers is being read, the event is held until after its register is cleared and then placed in the register.

The mnemonics for each of the bits in these registers and a brief description of their respective functions appears in Table 4. This tables also indicates how each of the interrupt bits is set.

NOTE: The INT bit in the Address 0 Register is a duplicate of the INT bit in the Interrupt Status 2 Register. It is only a status bit. It does not generate interrupts and thus does not have a corresponding enable bit.

The BO and BI interrupts enable the user to perform data transfer cycles. BO indicates that a data byte should be written to the Data Out Register. It is set by TACS · (SWNS + SGNS) · RFD. It is reset when the data byte is written, ATN is asserted, or the 8291A exits TACS. Data should never be written to the Data Out Register before BO is set. Similarly, BI is set when an input byte is accepted into the 8291A and reset when the microprocessor reads the Data In Register. BO and BI are also reset by pon (power-on local message) and by a read of the Interrupt

Table 4. Interrupt Bits

Indicates Undefined Commands	CPT	An undefined command has been received.
Set by (TPAS + LPAS)•SCG•ACDS•MODE 3	APT	A secondary address must be passed through to the microprocessor for recognition.
Set by DTAS	GET	A group execute trigger has occurred.
Set by (EOS + EOI)•LACS	END	An EOS or EOI message has been received.
Set by DCAS	DEC	Device Clear Active State has occurred.
Set by TACS•nba•DAC•RFD	ERR	Interface error has occurred; no listeners are active.
TACS•(SWNS + SGNS)	BO	A byte should be output.
Set by LACS•ACDS	BI	A byte has been input.
Shows status of the INT pin	INT	These are status only. They will not generate interrupts, nor do they have corresponding mask bits.
The device has been enabled for a serial poll	SPAS	
The device is in local lock out state. (LWLS+RWLS)	LLO	
The device is in a remote state. (REMS+RWLS)	REM	
SPAS →$\overline{\text{SPAS}}$ if APRS:STRS:SPAS was true	SPC	Serial Poll Complete interrupt.
LLO ⇄ NO LLO	LLOC	Local lock out change interrupt.
Remote ⇄ Local	REMC	Remote/Local change interrupt.
Addressed ⇄ Unaddressed	ADSC	Address status change interrupt.[1]

NOTE: [1]In ton (talk-only) and lon (listen-only) modes, no ADSC interrupt is generated.

Status 1 Register. However, if it is so desired, data transfer cycles may be performed without reading the Interrupt Status 1 Register if all interrupts except for BO or BI are disabled; BO and BI will automatically reset after each byte is transferred.

If the 8291A is used in the interrupt mode, the INT and DREQ pins can be dedicated to data input and output interrupts respectively by enabling BI and DMAO, provided that no other interrupts are enabled. This eliminates the need to read the interrupt status registers if a byte is received or transmitted.

The ERR bit is set to indicate the bus error condition when the 8291A is an active talker and tries to send a byte to the GPIB, but there are no active listeners (e.g., all devices on the GPIB are in AIDS). The logical equivalent of (nba · TACS · DAC · RFD) will set this bit.

The DEC bit is set whenever DCAS has occurred. The user must define a known state to which all device functions will return in DCAS. Typically this state will be a power-on state. However, the state of the device functions at DCAS is at the designer's discretion. It should be noted that DCAS has no effect on the interface functions which are returned to a known state by the IFC (interface clear) message or the pon local message.

The END interrupt bit may be used by the microprocessor to detect that a multi-byte transfer has been completed. The bit will be set when the 8291A is an active listener (LACS) and either EOS (provided the End on EOS Received feature is enabled in the Auxiliary Register A) or EOI is received. EOS will generate an interrupt when the byte in the Data In Register matches the byte in the EOS register. Otherwise the interrupt will be generated when a true input is detected on EOI.

The GET interrupt bit is used by the microprocessor to detect that DTAS has occurred. It is set by the 8291A when the GET message is received while it is addressed to listen. The TRIG output pin of the 8291A fires when the GET message is received. Thus, the basic operation of device trigger may be started without microprocessor software intervention.

The APT interrupt bit indicates to the processor that a secondary address is available in the CPT register for validation. This interrupt will only occur if Mode 3 addressing is in effect. (Refer to the section on addressing.) In Mode 2, secondary addresses will be recognized automatically on the 8291A. They will be ignored in Mode 1.

The CPT interrupt bit flags the occurrence of an undefined command and of all secondary commands following an undefined command. The Command Pass Through feature is enabled by the B0 bit of Auxiliary Register B. Any message not decoded by the 8291A (not included in the state diagrams in Appendix B) becomes an undefined command. Note that any addressed command is automatically ignored when the 8291A is not addressed.

Undefined commands are read by the CPU from the Command Pass Through register of the 8291A. This register reflects the logic levels present on the data lines at the time it is read. If the CPT feature is enabled, the 8291A will hold off the handshake until this register is read.

An especially useful feature of the 8291A is its ability to generate interrupts from state transitions in the interface functions. In particular, the lower 3 bits of the Interrupt Status 2 Register, if enabled by the corresponding enable bits, will cause an interrupt upon changes in the following states as defined in the IEEE 488 Standard.

Bit 0	ADSC	change in LIDS or TIDS or MJMN
Bit 1	REMC	change in LOCS or REMS
Bit 2	LLOC	change in LWLS or RWLS

The upper 4 bits of the Interrupt Status 2 Register are available to the processor as status bits. Thus, if one of the bits 0–2 generates an interrupt indicating a state change has taken place, the corresponding status bit (bits 3–5 may be read to determine what the new state is. To determine the nature of a change in addressed status (bit 0) the Address Status Register is available to be read. The SPC interrupt (bit 3 in Interrupt Status 2) is set upon exit from SPAS if APRS:STRS:SPAS occurred which indicates that the GPIB controller has read the bus serial poll status byte after the 8291A requested service (asserted SRQ). The SPC interrupt occurs once after the controller reads the status byte if service was requested.

The controller may read the status byte later, and the byte will contain the last status the 8291A's CPU wrote to the Serial Poll Mode Register, but the SRQS bit will not be set and no interrupt will be generated. Finally, bit 7 monitors the state of the 8291A INT pin. Logically, it is an OR of all enabled interrupt status bits. One should note that bits 3–6 of the Interrupt Status 2 Register do not generate interrupts, but are available only to be read as status bits by the processor. Bit 7 in Interrupt Status 2 is duplicated in Address 0 Register, and the latter should be used when polling for interrupts to avoid losing one of the interrupts in Interrupt Status 2 Register.

Bits 4 and 5 (DMAI, DMAO) of the Interrupt Mask 2 Register are available to enable direct data transfers between memory and the GPIB; DMAI (DMA in) enables the DREQ (DMA request) pin of the 8291A to be asserted upon the occurrence of BI. Similarly, DMAO (DMA out) enables the DREQ pin to be asserted upon the occurrence of BO. One might note that the DREQ pin may be used as a second interrupt output pin, monitoring BI and/or BO and enabled by DMAI and DMAO. One should note that the DREQ pin is not affected by a read of the Interrupt Status 1 Register. It is reset whenever a byte is written to the Data Out Register or read from the Data In Register.

To ensure that an interrupt status bit will not be cleared without being read, and will not remain uncleared after being read, the 8291A implements a special interrupt handling procedure. When an enabled interrupt bit is set in either of the Interrupt Status Registers, the input of the registers are blocked until the set bit is read and reset by the microprocessor. Thus, potential problems arise when interrupt status changes while the register is being blocked. However, the 8291A stores all new interrupts in a temporary register and transfers them to the appropriate Interrupt Status Register after the interrupt has been reset. This transfer takes place only if the corresponding bits were read as zeroes.

Serial Poll Registers

S8	SRQS	S6	S5	S4	S3	S2	S1

SERIAL POLL STATUS (3R)

S8	rsv	S6	S5	S4	S3	S2	S1

SERIAL POLL MODE (3W)

The Serial Poll Mode Register determines the status byte that the 8291A sends out on the GPIB data lines when it receives the SPE (Serial Poll Enable) message. Bit 6 of this register is reserved for the rsv (request service) local message. Setting this bit to 1 causes the 8291A to assert its $\overline{SRQ}$ line, indicating its need for attention from the controller-in-charge of the GPIB. The other bits of this register are available for sending status information over the GPIB. Sometime after the microprocessor initiates a request for service by setting bit 6, the controller of the GPIB sends the SPE message and then addresses the 8291A to talk. At this point, one byte of status is returned by the 8291A via the Serial Poll Mode Register. After the status byte is read by the controller, rsv is automatically cleared by the 8291A and an SPC interrupt is generated. The CPU may request service again by writing another byte to the Serial Poll Mode Register with the rsv bit set. If the controller performs a serial poll when the rsv bit is clear, the last status byte written will be read, but the $\overline{SRQ}$ line will not be driven by the 8291A and the SRQS bit will be clear in the status byte.

The Serial Poll Status Register is available for reading the status byte in the Serial Poll Mode Register. The processor may check the status of a request for service by polling bit 6 of this register, which corresponds to SRQS (Service Request State). When a Serial Poll is conducted and the controller-in-charge reads the status byte, the SRQS bit is cleared. The $\overline{SRQ}$ line and the rsv bit are tied together.

Address Registers

ton	lon	EOI	LPAS	TPAS	LA	TA	MJMN

ADDRESS STATUS (4R)

INT	DT0	DL0	AD5-0	AD4-0	AD3-0	AD2-0	AD1-0

ADDRESS 0 (6R)

X	DT1	DL1	AD5-1	AD4-1	AD3-1	AD2-1	AD1-1

ADDRESS 1 (7R)

TO	LO	0	0	0	0	ADM1	ADM0

ADDRESS MODE (4W)

ARS	DT	DL	AD5	AD4	AD3	AD2	AD1

ADDRESS 0/1 (6W)

The Address Mode Register is used to select one of the five modes of addressing available on the 8291A. It determines the way in which the 8291A uses the information in the Address 0 and Address 1 Registers.

—In Mode 1, the contents of the Address 0 Register constitute the "Major" talker/listener address while the Address 1 Register represents the "Minor" talker/listener address. In applications where only one address is needed, the major talker/listener is used, and the minor talker/listener should be disabled. Loading an address via the Address 0/1 Register into Address Registers 0 and 1 enables the major and minor talker/listener functions respectively.

—In Mode 2 the 8291A recognizes two sequential address bytes: a primary followed by a secondary. Both address bytes must be received in order to enable the device to talk or listen. In this manner, Mode 2 addressing implements the extended talker and listener functions as defined in IEEE-488.

To use Mode 2 addressing the primary address must be loaded into the Address 0 Register, and the Secondary Address is placed in the Address 1 Register. With both primary and secondary addresses residing on chip, the 8291A can handle all addressing sequences without processor intervention.

—In Mode 3, the 8291A handles addressing just as it does in Mode 1, except that each Major or Minor primary address must be followed by a secondary address. All secondary addresses must be verified by the microprocessor when Mode 3 is used. When the 8291A is in TPAS or LPAS (talker/listener primary addressed state), and it does not recognize the byte on the DIO lines, an APT interrupt is generated (see section on Interrupt Registers) and the byte is available in the CPT (Command Pass-Through) Register. As part of its interrupt service routine, the microprocessor must read the CPT Register and write one of the following responses to the Auxiliary Mode Register:

1. 07H implies a non-valid secondary address
2. 0FH implies a valid secondary address

Setting the TO bit generates the local ton (talk-only) message and sets the 8291A to a talk-only mode. This mode allows the device to operate as a talker in an interface system without a controller.

Setting the LO bit generates the local lon (listen-only) message and sets the 8291A to a listen-only mode. This mode allows the device to operate as a listener in an interface system without a controller. The above bits may also be used by a controller-in-charge to set itself up for remote command or data communication.

The mode of addressing implemented by the 8291A may be selected by writing one of the following bytes to the Address Mode Register.

Register Contents	Mode
10000000	Enable talk only mode (ton)
01000000	Enable listen only mode (lon)
11000000	The 8291 may talk to itself
00000001	Mode 1, (Primary-Primary)
00000010	Mode 2 (Primary-Secondary)
00000011	Mode 3 (Primary/APT-Primary/APT)

The Address Status Register contains information used by the microprocessor to handle its own addressing. This information includes status bits that monitor the address state of each talker/listener, "ton" and "lon" flags which indicate the talk and listen only states, and an EOI bit which, when set, signifies that the END message came with the last data byte. LPAS and TPAS indicate that the listener or talker primary address has been received. The microprocessor can use these bits when the secondary address is passed through to determine whether the 8291A is addressed to talk or listen. The LA (listener addressed) bit will be set when the 8291A is in LACS (Listener Active State) or in LADS (Listener Addressed State). Similarly, the TA (Talker Addressed bit) will be set to indicate TACS or TADS, but also to indicate SPAS (Serial Poll Active State). The MJMN bit is used to determine whether the information in the other bits applies to the Major or Minor talker/listener. It is set to "1" when the Minor talker/listener is addressed. It should be noted that only one talker/listener may be active at any one time. Thus, the MJMN bit will indicate which, if either, of the talker/listeners is addressed or active.

The Address 0/1 Register is used for specifying the device's addresses according to the format selected in the Address Mode Register. Five bit addresses may be loaded into the Address 0 and Address 1 Registers by writing into the Address 0/1 Register. The ARS bit is used to select which of these registers the other seven bits will be loaded into. The DT and DL bits may be used to disable the talker or listener function at the address signified by the other five

bits. When Mode 1 addressing is used and only one primary address is desired, *both* the talker and the listener should be disabled at the Minor address.

As an example of how the Address 0/1 Register might be used, consider an example where two primary addresses are needed in the device. The Major primary address will be selectable only as a talker and the Minor primary address will be selectable only as a listener. This configuration of the 8291A is formed by the following sequence of writes by the microprocessor.

Operation	$\overline{CS}$	$\overline{RD}$	$\overline{WR}$	Data	RS2-RS0
1. Select addressing Mode 1	0	1	0	00000001	100
2. Load major address into Address 0 Register with listener function disabled.	0	1	0	001AAAAA	110
3. Load minor address into Address 1 Register with talker function disabled.	0	1	0	110BBBBB	110

At this point, the addresses AAAAA and BBBBB are stored in the Address 0 and Address 1 Registers respectively, and are available to be read by the microprocessor. Thus, it is not necessary to store any address information elsewhere. Also, with the information stored in the Address 0 and Address 1 Registers, processor intervention is not required to recognize addressing by the controller. Only in Mode 3, where secondary addresses are passed through, must the processor intervene in the addressing sequence.

The Address 0 Register contains a copy of bit 7 of the Interrupt Status 2 Register (INT). This is to be used when polling for interrupts. Software should poll register 6 checking for INT (bit 7) to be set. When INT is set, the Interrupt Status Register should be read to determine which interrupt was received.

Command Pass Through Register

CPT7	CPT6	CPT5	CPT4	CPT3	CPT2	CPT1	CPT0

COMMAND PASS THROUGH (5R)

The Command Pass Through Register is used to transfer undefined 8-bit remote message codes from the GPIB to the microprocessor. When the CPT feature is enabled (bit B0 in Auxiliary Register B), any message not decoded by the 8291A becomes an undefined command. When Mode 3 addressing is used secondary addresses are also passed through the CPT Register. In either case, the 8291A will hold-off the handshake until the microprocessor reads this register and issues the VSCMD auxiliary command.

The CPT and APT interrupts flag the availablility of undefined commands and secondary addresses in the CPT Register. The details of these interrupts are explained in the section on Interrupt Registers.

An added feature of the 8291A is its ability to handle undefined secondary commands following undefined primaries. Thus, the number of available commands for future IEEE-488 definition is increased; one undefined primary command followed by a sequence of as many as 32 secondary commands can be processed. The IEEE-488 Standard does not permit users to define their own commands, but upgrades of the standard are thus provided for.

The recommended use of the 8291A's undefined command capabilities is for a controller-configured Parallel Poll. The PPC message is an undefined primary command typically followed by PPE, an undefined secondary command. For details on this procedure, refer to the section on Parallel Poll Protocol.

Auxiliary Mode Register

CNT2	CNT1	CNT0	COM4	COM3	COM2	COM1	COM0

AUX MODE (5W)

CNT0-2:CONTROL BITS
COM0-4:COMMAND BITS

The Auxiliary Mode Register contains a three-bit control field and a five-bit command field. It is used for several purposes on the 8291A:

1. To load "hidden" auxiliary registers on the 8291A.
2. To issue commands from the microprocessor to the 8291A.
3. To preset an internal counter used to generate T1, delay in the Source Handshake function, as defined in IEEE-488.

Table 5 summarizes how these tasks are performed with the Auxiliary Mode Register. Note that the three control bits determine how the five command bits are interpreted.

Table 5

CODE		COMMAND
CONTROL BITS	COMMAND BITS	
000	0CCCC	Execute auxiliary command CCCC
001	ODDDD	Preset internal counter to match external clock frequency of DDDD MHz (DDDD binary representation of 1 to 8 MHz)
100	DDDDD	Write DDDDD into auxiliary register A
101	DDDDD	Write DDDDD into auxiliary register B
011	$USP_3P_2P_1$	Enable/disable parallel poll either in response to remote messages (PPC followed by PPE or PPD) or as a local lpe message. (Enable if U = 0, disable if U = 1.)

AUXILIARY COMMANDS

Auxiliary commands are executed by the 8291A whenever 0000CCCC is written into the Auxiliary Mode Register, where CCCC is the 4-bit command code.

0000—Immediate Execute pon: This command resets the 8291A to a power up state (local pon message as defined in IEEE-488).
The following conditions constitute the power up state:
1. All talkers and listeners are disabled.
2. No interrupt status bits are set.

The 8291A is designed to power up in certain states as specified in the IEEE-488 state diagrams. Thus, the following states are in effect in the power up state: SIDS, AIDS, TIDS, LIDS, NPRS, LOCS, and PPIS.
The "0000" pon is an immediate execute command (a pon pulse). It is also used to release the "initialize" state generated by either an external reset pulse or the "0010" Chip Reset command.

0010—Chip Reset (Initialize): This command has the same effect as a pulse applied to the Reset pin. (Refer to the section on Reset Procedure.)

0011—Finish Handshake : This command finishes a handshake that was stopped because of a holdoff on RFD. (Refer to Auxiliary Register A.)

0100—Trigger: A "Group Execute Trigger" is forced by this command. It has the same effect as a GET command issued by the controller-in-charge of the GPIB, but does not cause a GET interrupt.

0101, 1101—Clear/Set rtl: These commands correspond to the local rtl message as defined by the IEEE-488. The 8291A will go into local mode when a Set rtl Auxiliary Command is received if local lockout is not in effect. The 8291A will exit local mode after receiving a Clear rtl Auxiliary Command if the 8291A is addressed to listen.

0110—Send EOI: The EOI line of the 8291A may be asserted with this command. The command causes EOI to go true with the next byte transmitted. The EOI line is then cleared upon completion of the handshake for that byte.

0111, 1111—Non Valid/Valid Secondary Address or Command (VSCMD): This command informs the 8291A that the secondary address received by the microprocessor was valid or invalid (0111 = invalid, 1111 = valid). If Mode 3 addressing is used, the processor must field each extended address and respond to it, or the GPIB will hang up. Note that the COM3 bit is the invalid/valid flag.

The valid (1111) command is also used to tell the 8291A to continue from the command-pass-through-state, or from RFD holdoff on GET, SDC or DCL.

1000—pon: This command puts the 8291A into the pon (power on) state and holds it there. It is similar to a Chip Reset except none of the Auxiliary Mode Registers are cleared. In this state, the 8291A does not participate in any bus activity. An Immediate Execute pon releases the 8291A from the pon state and permits the device to participate in the bus activity again.

0001, 1001—Parallel Poll Flag (local "ist" message): This command sets (1001) or clears (0001) the parallel poll flag. A "1" is sent over the assigned data line (PRR = Parallel Poll Response true) only if the parallel poll flag matches the sense bit from the lpe local message (or indirectly from the PPE message). For a more complete description of the Parallel Poll features and procedures refer to the section on Parallel Poll Protocol.

INTERNAL COUNTER

The internal counter determines the delay time allowed for the setting of data on the DIO lines. This delay time is defined as T_1 in IEEE-488 and appears in the Source Handshake state diagram between the

SDYS and STRS. As such, DAV is asserted T_1 *after* the DIO lines are driven. Consequently, T_1 is a major factor in determining the data transfer rate of the 8291A over the GPIB (T_1 = TWRDV2-TWRD15).

When open-collector transceivers are used for connection to the GPIB, T_1 is defined by IEEE-488 to be 2μsec. By writing 0010DDDD into the Auxiliary Mode Register, the counter is preset to match a f_C MHz clock input, where DDDD is the binary representation of N_F [$1 \leq N_F \leq 8$, $N_F=(DDDD)_2$]. When $N_F = f_C$, a 2μsec T_1 delay will be generated before each DAV asserted.

$$T_{1(\mu sec)} = \frac{2N_F}{f_C} + t_{SYNC}\ ,\ 1 \leq N_F \leq 8$$

t_{SYNC} is a synchronization error, greater than zero and smaller than the larger of T clock high and T clock low. (For a 50% duty cycle clock, t_{SYNC} is less than half the clock cycle).

If it is necessary that T_1 be different from 2μsec, N_F may be set to a value other than f_C. In this manner, data transfer rates may be programmed for a given system. In small systems, for example, where transfer rates exceeding GPIB specifications are required, one may set $N_F < f_C$ and decrease T_1.

When tri-state transceivers are used, IEEE-488 allows a higher transfer rate (lower T_1). Use of the 8291A with such transceivers is enabled by setting B_2 in Auxiliary Register B. In this case, setting $N_F = f_C$ causes a T_1 delay of 2μsec to be generated for the first byte transmitted — all subsequent bytes will have a delay of 500 nsec.

$$T_1(\text{High Speed})\ \mu\text{sec} = \frac{N_F}{2f_C} + t_{SYNC}$$

Thus, the shortest T_1 is achieved by setting $N_F=1$ using an 8 MHz clock with a 50% duty cycle clock ($t_{SYNC}<63$ nsec):

$$T_{1(HS)} = \frac{1}{2x8} + 0.063 = 125 \text{ nsec max.}$$

AUXILIARY REGISTER A

Auxiliary Register A is a "hidden" 5-bit register which is used to enable some of the 8291A features. Whenever a 100 $A_4A_3A_2A_1A_0$ byte is written into the Auxiliary Register, it is loaded with the data $A_4A_3A_2A_1A_0$. Setting the respective bits to "1" enables the following features.

A_0— RFD Holdoff on all Data: If the 8291A is listening, RFD will not be sent true until the "finish handshake" auxiliary command is issued by the microprocessor. The holdoff will be in effect for each data byte.

A_1—RFD Holdoff on End: This feature enables the holdoff on EOI or EOS (if enabled). However, no holdoff will be in effect on any other data bytes.

A_2—End on EOS Received: Whenever the byte in the Data In Register matches the byte in the EOS Register, the END interrupt bit will be set in the Interrupt Status 1 Register.

A_3—Output EOI on EOS Sent: Any occurrence of data in the Data Out Register matching the EOS Register causes the EOI line to be sent true along with the data.

A_4—EOS Binary Compare: Setting this bit causes the EOS Register to function as a full 8-bit word. When it is not set, the EOS Register is a 7-bit word (for ASCII characters).

If $A_0=A_1=1$, a special "continuous Acceptor Handshake cycling" mode is enabled. This mode should be used only in a controller system configuration, where both the 8291A and the 8292 are used. It provides a continuous cycling through the Acceptor Handshake state diagram, requiring no local messages from the microprocessor; the rdy local message is automatically generated when in ANRS. As such, the 8291A Acceptor Handshake serves as the controller Acceptor Handshake. Thus, the controller cycles through the Acceptor Handshake without delaying the data transfer in progress. When the tcs local message is executed, the 8291A should be taken out of the "continuous AH cycling" mode, the GPIB will hang up in ANRS, and a BI interrupt will be generated to indicate that control may be taken. A simpler procedure may be used when a "tcs on end of block" is executed; the 8291A may stay in "continuous AH cycling". Upon the end of a block (EOI or EOS received), a holdoff is generated, the GPIB hangs up in ANRS, and control may be taken.

AUXILIARY REGISTER B

Auxiliary Register B is a "hidden" 4-bit register which is used to enable some of the features of the 8291A. Whenever a 101 $B_4B_3B_2B_1B_0$ is written into the Auxiliary Mode Register, it is loaded with the data $B_4B_3B_2B_1B_0$. Setting the respective bits to "1" enables the following features:

B_0—Enable Undefined Command Pass Through: This feature allows any commands not recognized by the 8291A to be handled in software. If enabled, this feature will cause the 8291A to holdoff the handshake when an undefined command is received. The microprocessor must then read the command from the Command Pass Through Register and send the VSCMD auxiliary command. Until the VSCMD command is sent, the handshake holdoff will be in effect.

B_1—Send EOI in SPAS: This bit enables EOI to be sent with the status byte; EOI is sent true in Serial Poll Active State. Otherwise, EOI is sent false in SPAS.

B_2—Enable High Speed Data Transfer: This feature may be enabled when tri-state external transceivers are used. The data transfer rate is limited by T_1 delay time generated in the Source Handshake function, which is defined according to the type of transceivers used. When the "High Speed" feature is enabled, T_1 = 2 microseconds is generated for the first byte transmitted after each true to false transition of ATN. For all subsequent bytes, T_1 = 500 nanoseconds. Refer to the Internal Counter section for an explanation of T_1 duration as a function of B_2 and of clock frequency.

B_3—Enable Active Low Interrupt: Setting this bit causes the polarity of the INT pin to be reversed, providing an output signal compatible with Intel's MCS-48® Family. Interrupt registers are not affected by this bit.

B_4—Enable RFD Holdoff on GETor DEC: Setting this bit causes RFD to be held false until the "VSCMD" auxiliary command is written after GET, SDC, and DCL commands. This allows the device to hold off the bus until it has completed a clear or trigger similar to an unrecognized command.

PARALLEL POLL PROTOCOL

Writing a 011USP$_3$P$_2$P$_1$ into the Auxiliary Mode Register will enable (U=0) or disable (U=1) the 8291A for a parallel poll. When U=0, this command is the "lpe" (local poll enable) local message as defined in IEEE-488. The "S" bit is the sense in which the 8291A is enabled; only if the Parallel Poll Flag ("ist" local message) matches this bit will the Parallel Poll Response, PPR_N, be sent true (Response= S + ist). The bits $P_3P_2P_1$ specify which of the eight data lines PPR_N will be sent over. Thus, once the 8291A has been configured for Parallel Poll, whenever it senses both EOI and ATN true, it will automatically compare its PP flag with the sense bit and send PPR_N true or false according to the comparison.

If a PP2* implementation is desired, the "lpe" and "ist" local messages are all that are needed. Typically, the user will configure the 8291A for Parallel Poll immediately after initialization. During normal operation the microprocessor will set or clear the Parallel Poll Flag (ist) according to the device's need for service. Consequently the 8291A will be set up to give the proper response to IDY (EOI · ATN) without directly involving the microprocessor.

If a PP1* implementation is desired, the undefined command features of the 8291A must be used. In PP1, the 8291A is indirectly configured for Parallel Poll by the active controller on the GPIB. The sequence at the 8291A being enabled or disabled remotely is as follows:

1. The PPC message is received and is loaded into the Command Pass Through Register as an undefined command. A CPT Interrupt is sent to the microprocessor; the handshake is automatically held off.

2. The microprocessor reads the CPT Register and sends VSCMD to the 8291A, releasing the handshake.

3. Having received an undefined primary command, the 8291A is set up to receive an undefined secondary command (the PPE or PPD message). This message is also received into the CPT Register, the handshake is held off, and the CPT interrupt is generated.

NOTE: *As defined in IEEE Standard 488.

4. The microprocessor reads the PPE or PPD message and writes the command into the Auxiliary Mode Register (bit 7 should be cleared first). Finally, the microprocessor sends VSCMD and the handshake is released.

End of Sequence (EOS) Register

EC7	EC6	EC5	EC4	EC3	EC2	EC1	EC0

EOS REGISTER

The EOS Register and its features offer an alternative to the "Send EOI" auxiliary command. A seven or eight bit byte (ASCII or binary) may be placed in the register to flag the end of a block or read. The type of EOS byte to be used is selected in Auxiliary Register bit A_4.

If the 8291A is a listener, and the "End on EOS Received" is enabled with bit A_2, then an END interrupt is generated in the Interrupt Status 1 Register whenever the byte in the Data-In Register matches the byte in the EOS Register.

If the 8291A is a talker, and the "Output EOI on EOS Sent" is enabled with bit A_3, then the EOI line is sent true with the next byte whenever the contents of the Data Out Register match the EOS register.

Reset Procedure

The 8291A is reset to an initialization state either by a pulse applied to its Reset pin, or by a reset auxiliary command (02H written into the Auxiliary Command Register). The following conditions are caused by a reset pulse (or local reset command):

1. A "pon" local message as defined by IEEE-488 is held true until the initialization state is released.
2. The Interrupt Status Registers are cleared (not Interrupt Enable Registers).
3. Auxiliary Registers A and B are cleared.
4. The Serial Poll Mode Register is cleared.
5. The Parallel Poll Flag is cleared.
6. The EOI bit in the Address Status Register is cleared.
7. N_F in the Internal Counter is set to 8 MHz. This setting causes the longest possible T_1 delay to be generated in the Source Handshake (16 μsec for 1 MHz clock).
8. The rdy local message is sent.

The initialization state is released by an "immediate execute pon" command (00H written into the Auxiliary Command Register).

The suggested initialization sequence is:

1. Apply a reset pulse or send the reset auxiliary command.
2. Set the desired intial conditions by writing into the Interrupt Enable, Serial Poll Mode, Address Mode, Address 0/1, and EOS Registers. Auxiliary Registers A and B, and the internal counter should also be initialized.
3. Send the "immediate execute pon" auxiliary command to release the initialization state.
4. If a PP2 Parallel Poll implementation is to be used the "lpe" local message may be sent, enabling the 8291A for a Parallel Poll Response on an assigned line. (Refer to the section on Parallel Poll Protocol.)

Using DMA

The 8291A may be connected to the Intel® 8237 or 8257 DMA Controllers or the 8089 I/O Processor for DMA operation. The 8237 will be used to refer to any DMA controller. The DREQ pin of the 8291A requests a DMA byte transfer from the 8237. It is set by BO or BI flip flops, enabled by the DMAO and DMAI bits in the Interrupt Enable 2 Register. (After reading, the INT1 register BO and BI interrupts will be cleared but not BO and BI in DREQ equation.)

The $\overline{DACK}$ pin is driven by the 8237 in response to the DMA request. When $\overline{DACK}$ is true (active low) it sets $\overline{CS}$= RS0= RS1= RS2=0 such that the $\overline{RD}$ and $\overline{WR}$ signals sent by the 8237 refer to the Data In and Data Out Registers. Also, the DMA request line is reset by $\overline{DACK}$ ($\overline{RD}$ + $\overline{WR}$).

DMA input sequence:

1. A data byte is accepted from the GPIB by the 8291A.
2. A BI interrupt is generated and DREQ is set.
3. $\overline{DACK}$ and $\overline{RD}$ are driven by the 8237, the contents of the Data In Register are transferred to the system bus, and DREQ is reset.
4. The 8291A sends RFD true on the GPIB and proceeds with the Acceptor Handshake protocol.

DMA output sequence:

1. A BO interrupt is generated (indicating that a byte should be output) and DREQ is asserted.

2. $\overline{DACK}$ and $\overline{WR}$ are driven by the 8237, a byte is transferred from the MCS bus into the Data Out Register, and DREQ is reset.
3. The 8291A sends DAV true on the GPIB and proceeds with the Source Handshake protocol.

It should be noted that each time the device is addressed (MTA + MLA + ton + lon), the Address Status Register should be read, and the 8237 should be initialized accordingly. (Refer to the 8237 or 8257 Data Sheets.)

APPLICATION BRIEF

System Configuration

MICROPROCESSOR BUS CONNECTION

The 8291A is 8048/49, 8051, 8080/85, and 8086/88 compatible. The three address pins (RS_0, RS_1, RS_2) should be connected to the non-multiplexed address bus (for example: A_8, A_9, A_{10}). In case of 8080, any address lines may be used. If the three lowest address bits are used (A_0, A_1, A_2), then they must be demultiplexed first.

EXTERNAL TRANSCEIVERS CONNECTION

The 8293 GPIB Transceiver interfaces the 8291A directly to the IEEE-488 bus. The 8291A and two 8293's can be configured as a talker/listener (see Figure 6) or with the 8292 as a talker/listener/controller (see Figure 7). Absolutely no active or passive external components are required to comply with the complete IEEE-488 electrical specification.

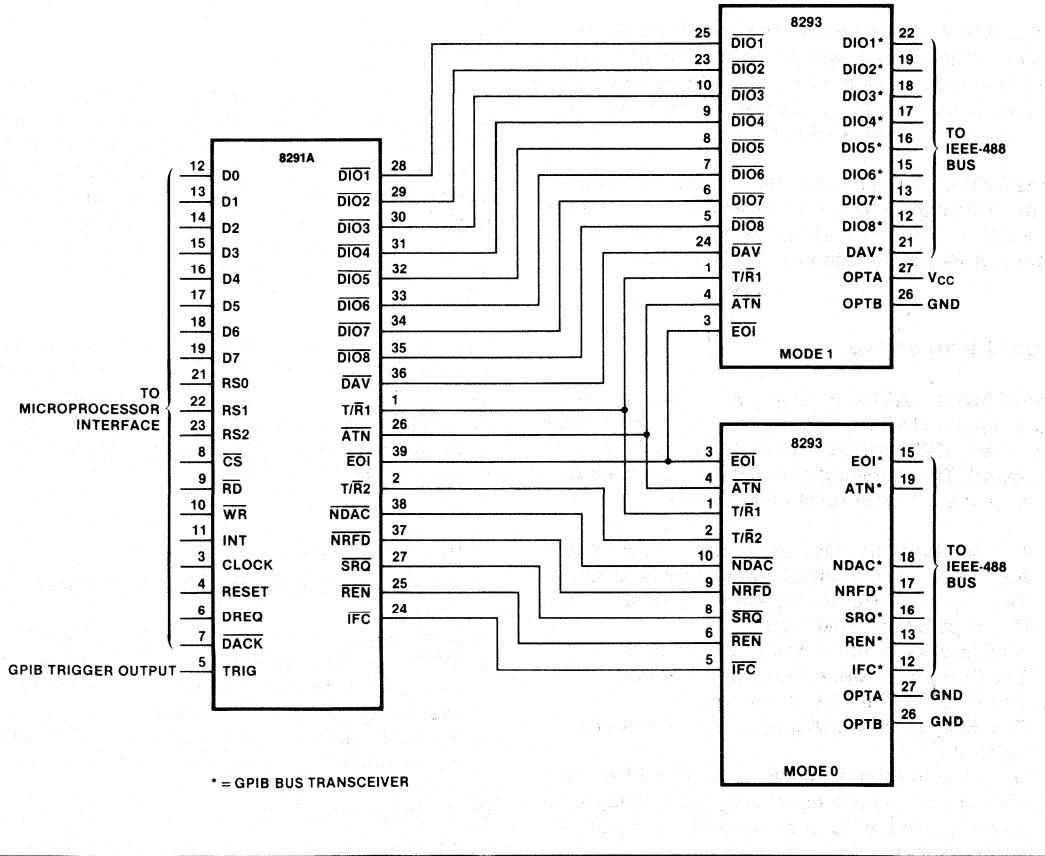

Figure 6. 8291A and 8293 System Configuration

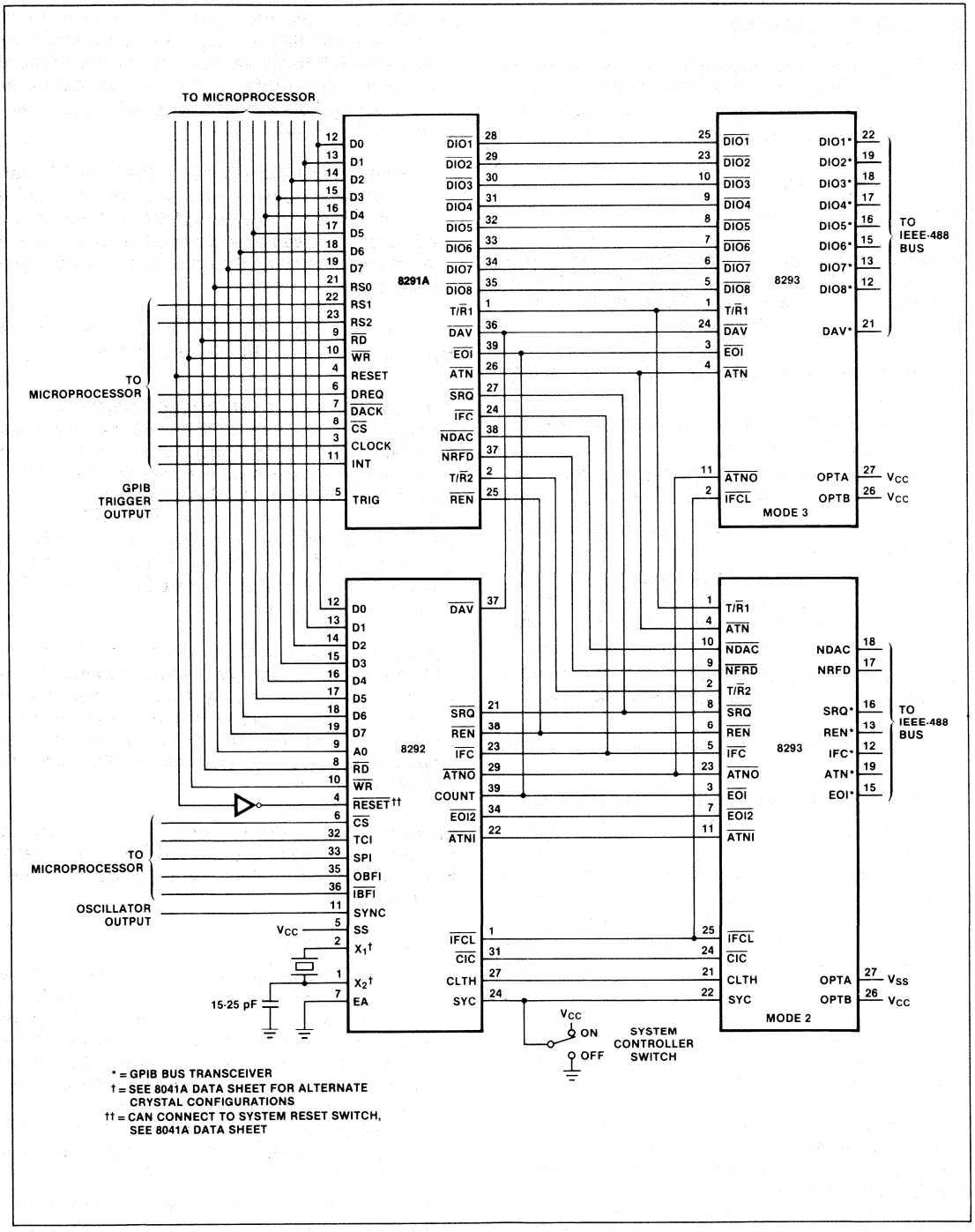

Figure 7. 8291A, 8292, and 8293 System Configuration

Start-Up Procedures

The following section describes the steps needed to initialize a typical 8291A system implementing a talker/listener interface and an 8291A/8292 system implementing a talker/listener/controller interface.

TALKER/LISTENER SYSTEM

Assume a general system configuration with the following features: (i) Polled system interface; (ii) Mode 1 addressing; (iii) same address for talker and listener; (iv) ASCII carriage return as the end-of-sequence (EOS) character; (v) EOI sent true with the last byte; and, (vi) 8 MHz clock.

Initialization. Initialization is accomplished with the following steps:

1. Pulse the RESET input or write 02H to the Auxiliary Mode Register.
2. Write 00H to the Interrupt Enable Registers 1 and 2. This disables interrupt and DMA.
3. Write 01H to the Address Mode Register to select Mode 1 addressing.
4. Write 28H to the Auxiliary Mode Register. This loads 8H to the Auxiliary Register A matching the 8 MHz clock input to the internal T1 delay counter to generate the delay meeting the IEEE spec.
5. Write the talker/listener address to the Address 0/1 register. The three most significant bits are zero.
6. Write an ASCII carriage return (0DH) to the EOS register.
7. Write 84H to the Auxiliary Mode Register to allow $\overline{EOI}$ to be sent true when the EOS character is sent.
8. Write 00H to the Auxiliary Mode Register. This writes the "Immediate Execute pon" message and takes the 8291A from the initialization state into the idle state. The 8291A will remain idle until the controller initiates some activity by driving $\overline{ATN}$ true.

Communication. The local CPU now polls the 8291A to determine which controller command has been received.

The controller addresses the 8291A by driving $\overline{ATN}$, placing MLA (My Listen Address) on the bus and driving $\overline{DAV}$. If the lower five bits of the MLA message match the address programmed into the Address 0/1 register, the 8291A is addressed to listen. It would be addressed to talk if the controller sent the MTA message instead of MLA.

The ADSC bit in the Interrupt Status 2 Register indicates that the 8291A has been addressed or unaddressed. The TA and LA bits in the Address Status Register indicate whether the 8291A is talker (TA=1), listener (LA=1), both (TA=LA=1) or unaddressed (TA=LA=0).

If the 8291A is addressed to listen, the local CPU can read the Data-In Register whenever the BI (Byte In) interrupt occurs in the Interrupt Status 1 Register. If the END bit in the same register is also set, either EOI or a data byte matching the pattern in the EOS register has been received.

In the talker mode, the CPU writes data into the Byte-Out Register on BO (Byte Out) true.

TALKER/LISTENER/CONTROLLER SYSTEM

Combined with the Intel 8292, the 8291A executes a complete IEEE-488-1978 controller function, The 8291A talks and listens via the data and handshake lines ($\overline{NRFD}$, $\overline{NDAC}$ and $\overline{DAV}$). The 8292 controls four of the five bus management lines ($\overline{IFC}$, $\overline{SRQ}$, $\overline{ATN}$ and $\overline{REN}$). $\overline{EOI}$, the fifth line, is shared. The 8291A drives and receives $\overline{EOI}$ when $\overline{EOI}$ is used as an end-of-block indicator. The 8292 drives $\overline{EOI}$ along with $\overline{ATN}$ during a parallel poll command.

Once again, assume a general system configuration with the following features: (i) Polled system interface; (ii) 8292 as the system controller and controller-in-charge; (iii) ASCII carriage return (0DH) as the EOS identifier; (iv) $\overline{EOI}$ sent with the last character; and, (v) an external buffer (8282) used to monitor the TCI line.

Initialization. In order to send a command across the GPIB, the 8292 has to drive $\overline{ATN}$, and the 8291A has to drive the data lines. Both devices therefore need initialization.

To initialize the 8292:

1. Pulse the RESET input. The 8292 will initially drive all outputs high. TCI, SPI, OBFI, IBFI and CLTH will then go low. The Interrupt Status, Interrupt Mask, Error Flag, Error Mask and Timeout registers will be cleared. The interrupt counter will be disabled and loaded with 255. The 8292 will then monitor the status of the SYC pin. If high, the 8292 will pulse IFC true for at least 100μs in compliance with the IEEE-488-1978 standard. It will then take control by asserting $\overline{ATN}$.

To initialize the 8291A, the following is necessary:

1. Write 00H to Interrupt Enable registers 1 and 2. This disables interrupt and DMA.

2. With the 8292 as the controller-in-charge, it is impossible to address the 8292 via the GPIB. Therefore, the ton or lon modes of the 8291A must be used. To send comands, set the 8291A in the ton mode by writing 80H to the Address Mode Register.
3. Write 26H to the Auxiliary Mode Register to match the T1 data settling time to the 6 MHz clock input.
4. Write an ASCII carriage return (0DH) to the EOS Register.
5. Write 84H to the Auxiliary Mode Register in order to enable "Output EOI on EOS sent" and thus send EOI with the last character.
6. Write 00H—Immediate Execute pon—to the Auxiliary Mode Register to put the 8291A in the idle state.

Communication. Since the 8291A is in the ton mode, a BO interrupt is generated as soon as the immediate Execute pon command is written. The CPU writes the command into the Data Out Register, and repeats it on BO becoming true for as many commands as necessary. $\overline{ATN}$ remains continuously true unless the GTSB (Go To Standby) command is sent to the 8292.

$\overline{ATN}$ has to be false in order to send data rather than commands from the controller. To do this, the following steps are needed:

1. Enable the TCI interrupt if not already enabled.
2. Wait for IBF (Input Buffer Full) in the 8292 Interrupt Status Register to be reset.
3. Write the GTSB (F6H) command to the 8292 Command Field Register.
4. Read the 8282 and wait for TCI to be true.
5. Write the ton (80H) and pon (00H) command to the 8291A Address Mode Register and Auxiliary Mode Registers respectively.
6. Wait for the BO interrupt to be set in the 8291A.
7. Write the data to the 8291A Data-Out Register.

Identically, the user could command the controller to listen rather than talk. To do that, write lon (40H) instead of ton into the Address Mode Register. Then wait for BI rather than BO to go true. Read the data Register.

ABSOLUTE MAXIMUM RATINGS

Ambient Temperature Under Bias ..... 0°C to 70°C
Storage Temperature ..... −65°C to +150°C
Voltage on Any Pin
With Respect to Ground ..... −0.5V to +7V
Power Dissipation ..... 0.65 Watts

**NOTICE: Stresses above those listed under "Absolute Maximum Ratings" may cause permanent damage to the device. This is a stress rating only and functional operation of the device at these or any other conditions above those indicated in the operational sections of this specification is not implied. Exposure to absolute maximum rating conditions for extended periods may affect device reliability.*

D.C. CHARACTERISTICS [V_{CC} = 5V ±10%, T_A = 0°C to 70°C (Commercial)]

Symbol	Parameter	Min.	Max.	Unit	Test Conditions
V_{IL}	Input Low Voltage	-0.5	0.8	V	
V_{IH}	Input High Voltage	2	V_{CC}+0.5	V	
V_{OL}	Output Low Voltage		0.45	V	I_{OL}=2mA (4mA for TR1 pin)
V_{OH}	Output High Voltage	2.4		V	I_{OH} = -400μA (-150μA for SRQ pin)
V_{OH-INT}	Interrupt Output High Voltage	2.4		V	I_{OH}=-400μA
		3.5		V	I_{OH}=-50μA
I_{IL}	Input Leakage		10	μA	V_{IN}=0V to V_{CC}
I_{IOFL}	Output Leakage Current		±10	μA	V_{OUT}=0.45V, V_{CC}
I_{CC}	V_{CC} Supply Current		120	mA	T_A=0°C

A.C. CHARACTERISTICS [V_{CC} = 5V ±10%, T_A = 0°C to 70°C (Commercial)]

Symbol	Parameter	Min.	Max.	Unit	Test Conditions
t_{AR}	Address Stable Before $\overline{READ}$	0		nsec	
t_{RA}	Address Hold After $\overline{READ}$	0		nsec	
t_{RR}	$\overline{READ}$ width	140		nsec	
t_{AD}	Address Stable to Data Valid		250	nsec	
t_{RD}	$\overline{READ}$ to Data Valid		100	nsec	
t_{RDF}	Data Float After $\overline{READ}$	0	60	nsec	
t_{AW}	Address Stable Before $\overline{WRITE}$	0		nsec	
t_{WA}	Address Hold After $\overline{WRITE}$	0			
t_{WW}	$\overline{WRITE}$ Width	170		nsec	
t_{DW}	Data Set Up Time to the Trailing Edge of $\overline{WRITE}$	130		nsec	
t_{WD}	Data Hold Time After $\overline{WRITE}$	0		nsec	
t_{DKDR4}	$\overline{RD}$↓ or $\overline{WR}$↓ to DREQ↓		130	nsec	
t_{DKDA6}	RD↓ to Valid Data (D_0–D_7)		200	nsec	$\overline{DACK}$↓ to $\overline{RD}$↓ 0 ≤t ≤50nsec

WAVEFORMS

READ

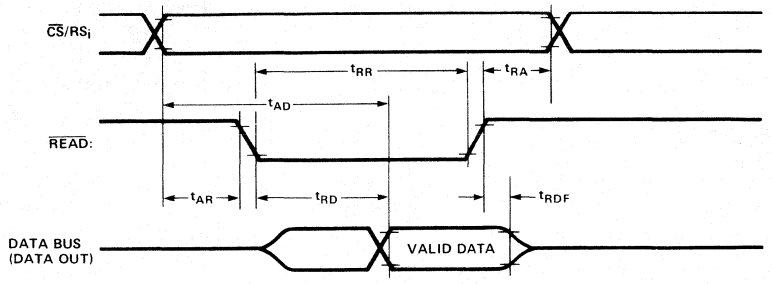

WRITE

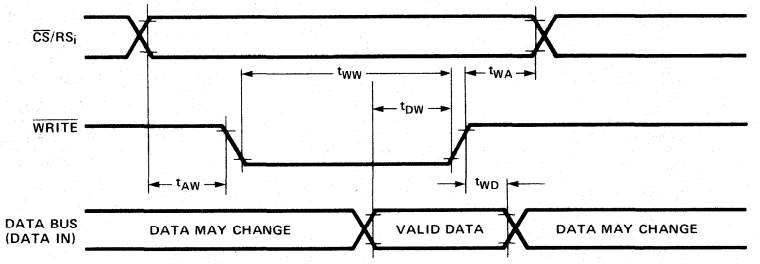

DMA

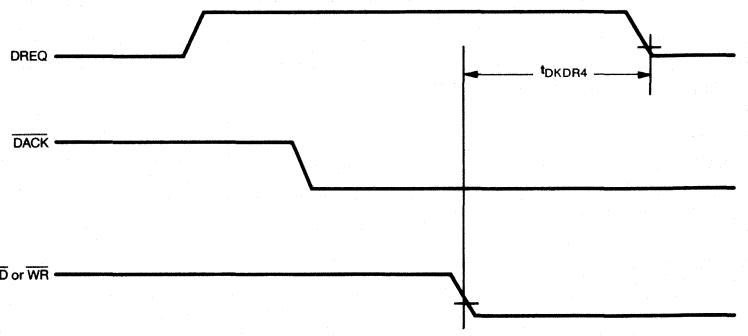

A.C. TIMING MEASUREMENT POINTS AND LOAD CONDITIONS

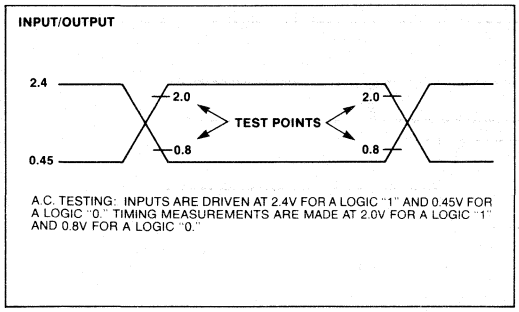

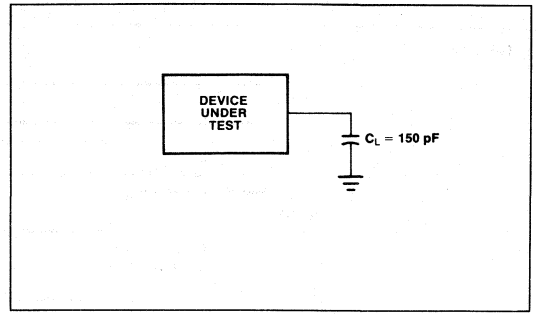

GPIB TIMINGS[1]

Symbol	Parameter	Max.	Units	Test Conditions
TEOT13[2]	$\overline{EOI}\downarrow$ to TR1$\uparrow$	135	nsec	PPSS, ATN=0.45V
TEOD16	$\overline{EOI}\downarrow$ to $\overline{DIO}$ Valid	155	nsec	PPSS, ATN=0.45V
TEOT12	$\overline{EOI}\uparrow$ to TR1$\downarrow$	155	nsec	PPSS, ATN=0.45V
TATND4	$\overline{ATN}\downarrow$ to $\overline{NDAC}\downarrow$	155	nsec	TACS, AIDS
TATT14	$\overline{ATN}\downarrow$ to TR1$\downarrow$	155	nsec	TACS, AIDS
TATT24	$\overline{ATN}\downarrow$ to TR2$\downarrow$	155	nsec	TACS, AIDS
TDVND3-C	$\overline{DAV}\downarrow$ to $\overline{NDAC}\uparrow$	650	nsec	AH, CACS
TNDDV1	$\overline{NDAC}\uparrow$ to $\overline{DAV}\uparrow$	350	nsec	SH, STRS
TNRDR1	$\overline{NRFD}\uparrow$ to DREQ$\uparrow$	400	nsec	SH
TDVDR3	$\overline{DAV}\downarrow$ to DREQ$\uparrow$	600	nsec	AH, LACS, ATN=2.4V
TDVND2-C	$\overline{DAV}\uparrow$ to $\overline{NDAC}\downarrow$	350	nsec	AH, LACS
TDVNR1-C	$\overline{DAV}\uparrow$ to $\overline{NRFD}\uparrow$	350	nsec	AH, LACS, rdy=True
TRDNR3	$\overline{RD}\downarrow$ to $\overline{NRFD}\uparrow$	500	nsec	AH, LACS
TWRD15	$\overline{WR}\uparrow$ to $\overline{DIO}$ Valid	280	nsec	SH, TACS, RS=0.4V
TWREO5	$\overline{WR}\uparrow$ to $\overline{EOI}$ Valid	350	nsec	SH, TACS
TWRDV2	$\overline{WR}\uparrow$ to $\overline{DAV}\downarrow$	830 + t_{SYNC}	nsec	High Speed Transfers Enabled, $N_F = f_C$, $t_{SYNC} = 1/2 \cdot f_C$

NOTES:
1. All GPIB timings are at the pins of the 8291A.
2. The last number in the symbol for any GPIB timing parameter is chosen according to the transition directions of the reference signals. The following table describes the numbering scheme.

$\uparrow$ to $\uparrow$	1
$\uparrow$ to $\downarrow$	2
$\downarrow$ to $\uparrow$	3
$\downarrow$ to $\downarrow$	4
$\uparrow$ to VALID	5
$\downarrow$ to VALID	6

APPENDIX A

MODIFIED STATE DIAGRAMS

Figure A-1 presents the interface function state diagrams. It is derived from IEEE Std. state diagrams, with the following changes:

A. The 8291A supports the complete set of IEEE-488 interface functions except for the controller. These include: SH1, AH1, T5, TE5, L3, LE3, SR1, RL1, PP1, DC1, DT1, and C0.

B. Addressing modes included in T,L state diagrams.

Note that in Mode 3, MSA, OSA are generated only after secondary address validity check by the microprocessor (APT interrupt).

C. In these modified state diagrams, the IEEE-488-1978 convention of negative (low true) logic is followed. This should not be confused with the Intel pin- and signal-naming convention based on positive logic. Thus, while the state diagrams below carry low true logic, the signals described elsewhere in this data sheet are consistent with Intel notation and are based on positive logic.

Level	Logic	Convention	
		IEEE-488	Intel
0	T	DAV	$\overline{DAV}$
1	F	$\overline{DAV}$	DAV
0	T	NDAC	$\overline{NDAC}$
1	F	$\overline{NDAC}$	NDAC
0	T	NRFD	$\overline{NRFD}$
1	F	$\overline{NRFD}$	NRFD

Consider the condition when the Not-Ready-For-Data signal (pin 37) is active. Intel indicates this active low signal with the symbol $\overline{NRFD}$ ($V_{OUT} \leq V_{OL}$ for AH; $V_{IN} \leq V_{IL}$ for SH). The IEEE-488-1978 Standard, in its state diagrams, indicates the active state of this signal (True condition) with NRFD.

D. All remote multiline messages decoded are conditioned by ACDS. The multiplication by ACDS is not drawn to simplify the diagrams.

E. The symbol

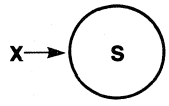

indicates:

1. When event X occurs, the function returns to state S.
2. X overrides any other transition condition in the function.

Statement 2 simplifies the diagram, avoiding the explicit use of X to condition all transitions from S to other states.

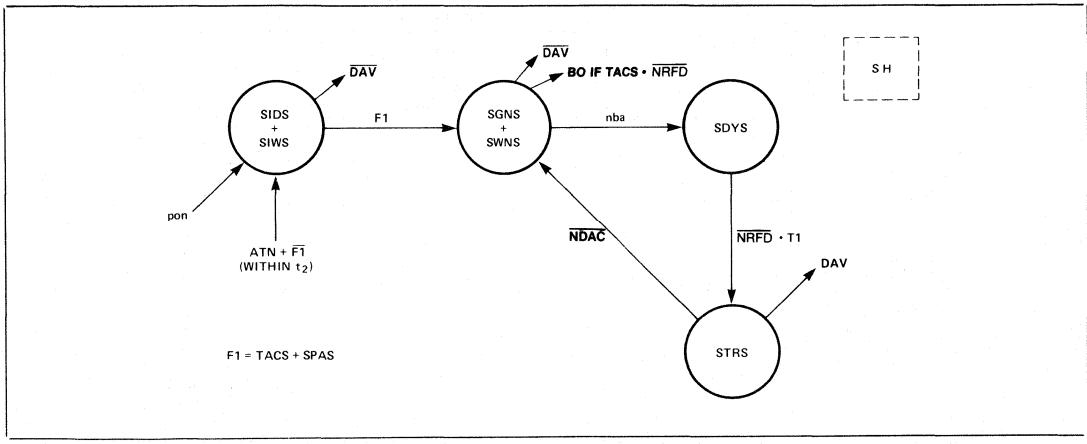

Figure A-1. 8291A State Diagrams (Continued next page)

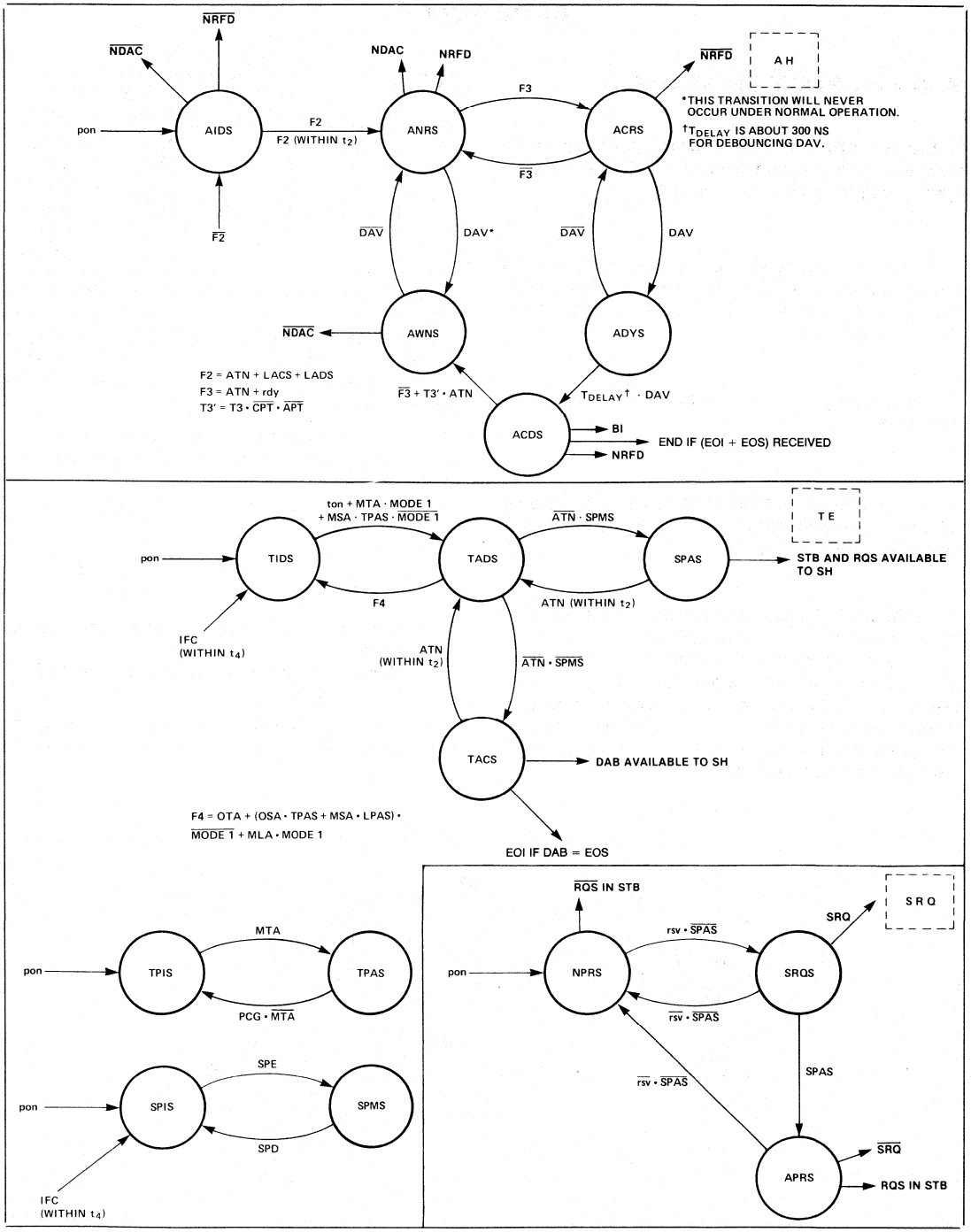

Figure A-1. 8291A State Diagrams (Continued next page)

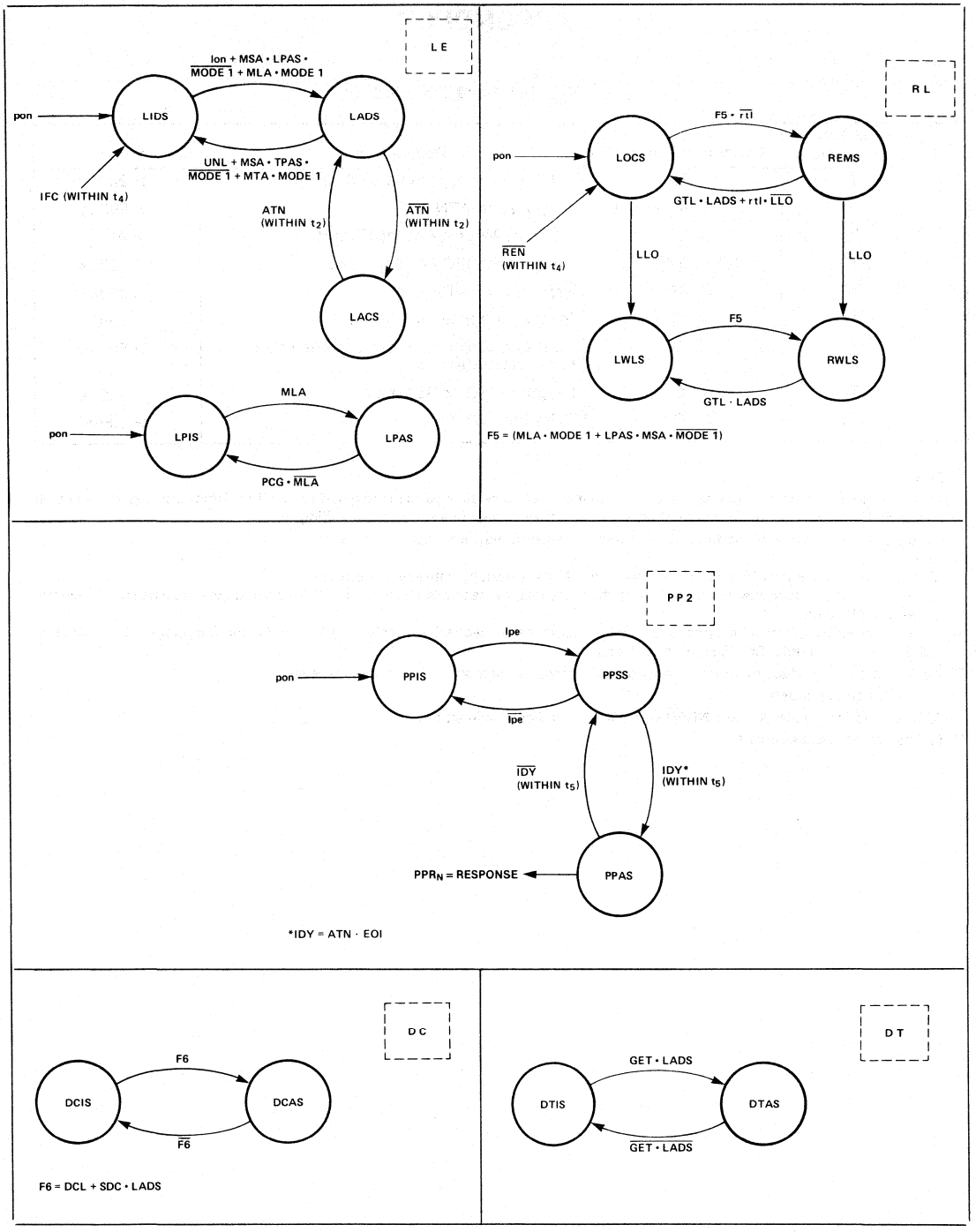

Figure A-1. 8291A State Diagrams

APPENDIX B

Table B-1. IEEE 488 Time Values

Time Value Identifier[1]	Function (Applies to)	Description	Value
T_1	SH	Settling Time for Multiline Messages	$\geq 2\mu s$[2]
t_2	LC,$\overline{IC}$,SH,AH,T,L	Response to ATN	$\leq$ 200ns
T_3	AH	Interface Message Accept Time[3]	> 0[4]
t_4	T,TE,L,LE,C,CE	Response to IFC or REN False	$< 100\mu s$
t_5	PP	Response to ATN+EOI	$\leq$ 200ns
T_6	C	Parallel Poll Execution Time	$\geq 2\mu s$
T_7	C	Controller Delay to Allow Current Talker to see ATN Message	$\geq$ 500 ns
T_8	C	Length of IFC or REN False	$> 100\mu s$
T_9	C	Delay for EOI[5]	$\geq 1.5\mu s$[6]

NOTES:

[1]Time values specified by a lower case t indicate the maximum time allowed to make a state transition. Time values specified by an upper case T indicate the minimum time that a function must remain in a state before exiting.

[2]If three-state drivers are used on the $\overline{DIO}$, $\overline{DAV}$, and $\overline{EOI}$ lines, T_1 may be:

1. $\geq$ 1100 ns.
2. Or $\geq$ 700 ns if it is known that within the controller ATN is driven by a three-state driver.
3. Or $\geq$ 500ns for all subsequent bytes following the first sent after each false transition of ATN (the first byte must be sent in accordance with (1) or (2).
4. Or $\geq$ 350ns for all subsequent bytes following the first sent after each false transition of ATN under conditions specified in Section 5.2.3 and warning note. See IEEE Standard 488.

[3]Time required for interface functions to accept, not necessarily respond to interface messages.

[4]Implementation dependent.

[5]Delay required for $\overline{EOI}$, $\overline{NDAC}$, and $\overline{NRFD}$ signal lines to indicate valid states.

[6]$\geq$ 600 ns for three-state drivers.

APPENDIX C
THE THREE-WIRE HANDSHAKE

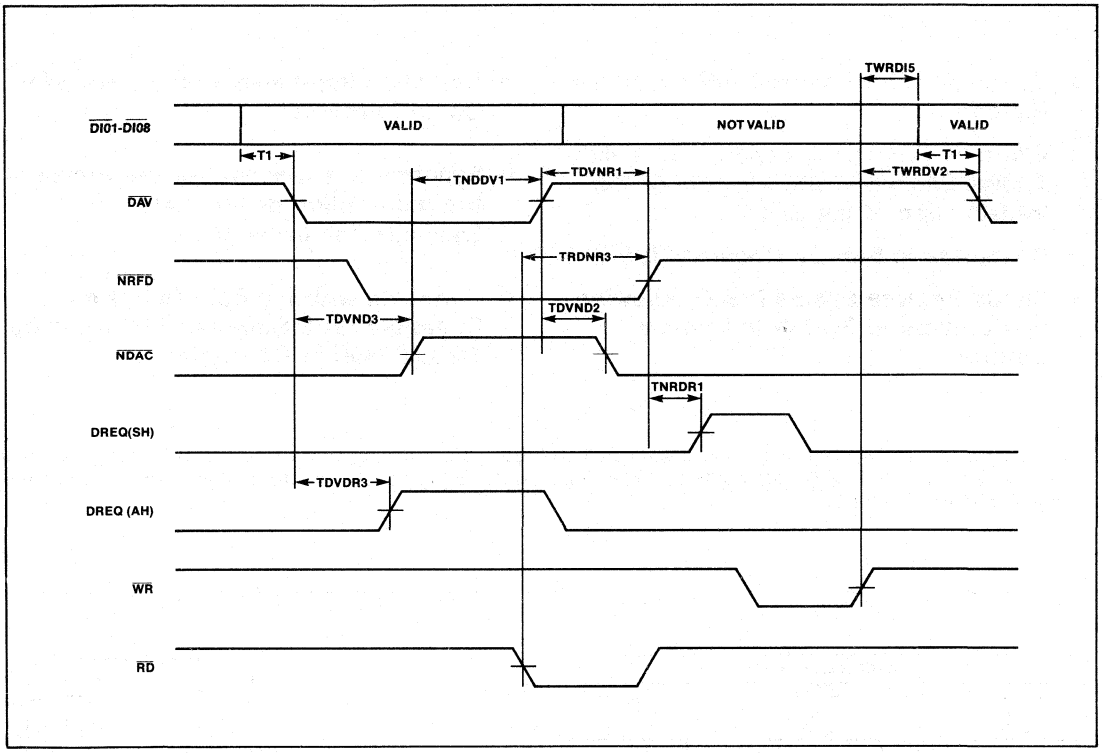

Figure C-1. 3-Wire Handshake Timing at 8291A

8292
GPIB CONTROLLER

- **Complete IEEE Standard 488 Controller Function**
- **Interface Clear (IFC) Sending Capability Allows Seizure of Bus Control and/or Initialization of the Bus**
- **Responds to Service Requests (SRQ)**
- **Sends Remote Enable (REN), Allowing Instruments to Switch to Remote Control**
- **Complete Implementation of Transfer Control Protocol**
- **Synchronous Control Seizure Prevents the Destruction of Any Data Transmission in Progress**
- **Connects with the 8291 to Form a Complete IEEE Standard 488 Interface Talker/Listener/Controller**

The 8292 GPIB Controller is a microprocessor-controlled chip designed to function with the 8291 GPIB Talker/Listener to implement the full IEEE Standard 488 controller function, including transfer control protocol. The 8292 is a pre-programmed Intel® 8041A.

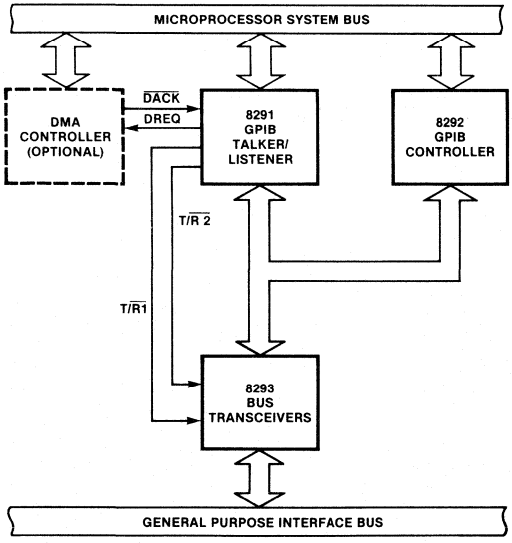

Figure 1. 8291, 8292 Block Diagram

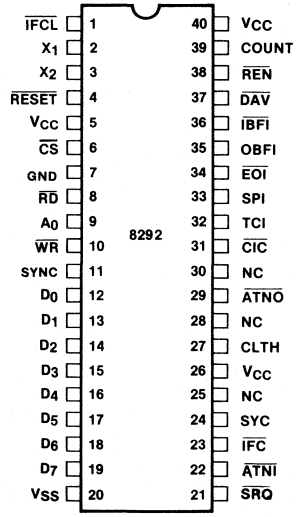

Figure 2. Pin Configuration

Table 1. Pin Description

Symbol	Pin No.	Type	Name and Function
$\overline{IFCL}$	1	I	**IFC Received (Latched):** The 8292 monitors the IFC Line (when not system controller) through this pin.
X_1, X_2	2, 3	I	**Crystal Inputs:** Inputs for a crystal, LC or an external timing signal to determine the internal oscillator frequency.
$\overline{RESET}$	4	I	**Reset:** Used to initialize the chip to a known state during power on.
$\overline{CS}$	6	I	**Chip Select Input:** Used to select the 8292 from other devices on the common data bus.
$\overline{RD}$	8	I	**Read Enable:** Allows the master CPU to read from the 8292.
A_0	9	I	**Address Line:** Used to select between the data bus and the status register during read operations and to distinguish between data and commands written into the 8292 during write operations.
$\overline{WR}$	10	I	**Write Enable:** Allows the master CPU to write to the 8292.
SYNC	11	O	**Sync:** 8041A instruction cycle synchronization signal; it is an output clock with a frequency of XTAL ÷ 15.
D_0–D_7	12-19	I/O	**Data:** 8 bidirectional lines used for communication between the central processor and the 8292's data bus buffers and status register.
V_{SS}	7, 20	P.S.	**Ground:** Circuit ground potential.
$\overline{SRQ}$	21	I	**Service Request:** One of the IEEE control lines. Sampled by the 8292 when it is controller in charge. If true, SPI interrupt to the master will be generated.
$\overline{ATNI}$	22	I	**Attention In:** Used by the 8292 to monitor the GPIB ATN control line. It is used during the transfer control procedure.
$\overline{IFC}$	23	I/O	**Interface Clear:** One of the GPIB management lines, as defined by IEEE Std. 488-1978, places all devices in a known quiescent state.
SYC	24	I	**System Conroller:** Monitors the system controller switch.
CLTH	27	O	**Clear Latch:** Used to clear the $\overline{IFCR}$ latch after being recognized by the 8292. Usually low (except after hardware Reset), it will be pulsed high when $\overline{IFCR}$ is recognized by the 8292.
$\overline{ATNO}$	29	O	**Attention Out:** Controls the ATN control line of the bus through external logic for tcs and tca procedures. (ATN is a GPIB control line, as defined by IEEE Std. 488-1978.)

Symbol	Pin No.	Type	Name and Function
V_{CC}	5, 26, 40	P.S.	**Voltage:** +5V supply input ±10%.
COUNT	39	I	**Event Count:** When enabled by the proper command the internal counter will count external events through this pin. High to low transition will increment the internal counter by one. The pin is sampled once per three internal instruction cycles (7.5μsec sample period when using 5 MHz XTAL). It can be used for byte counting when connected to NDAC, or for block counting when connected to the EOI.
$\overline{REN}$	38	O	**Remote Enable:** The Remote Enable bus signal selects remote or local control of the device on the bus. A GPIB bus management line, as defined by IEEE Std. 488-1978.
$\overline{DAV}$	37	I/O	**Data Valid:** Used during parallel poll to force the 8291 to accept the parallel poll status bits. It is also used during the tcs procedure.
$\overline{IBFI}$	36	O	**Input Buffer Not Full:** Used to interrupt the central processor while the input buffer of the 8292 is empty. This feature is enabled and disabled by the interrupt mask register.
OBFI	35	O	**Output Buffer Full:** Used as an interrupt to the central processor while the output buffer of the 8292 is full. The feature can be enabled and disabled by the interrupt mask register.
$\overline{EO12}$	34	I/O	**End Or Identify:** One of the GPIB management lines, as defined by IEEE Std. 488-1978. Used with ATN as Identify Message during parallel poll.
SPI	33	O	**Special Interrupt:** Used as an interrupt on events not initiated by the central processor.
TCI	32	O	**Task Complete Interrupt:** Interrupt to the control processor used to indicate that the task requested was completed by the 8292 and the information requested is ready in the data bus buffer.
CIC	31	O	**Controller In Charge:** Controls the S/R input of the SRQ bus transceiver. It can also be used to indicate that the 8292 is in charge of the GPIB bus.

FUNCTIONAL DESCRIPTION

The 8292 is an Intel 8041A which has been programmed as a GPIB Controller interface element. It is used with the 8291 GPIB Talker/Listener and two 8293 GPIB Transceivers to form a complete IEEE-488 Bus Interface for a microprocessor. The electrical interface is performed by the transceivers, data transfer is done by the talker/listener, and control of the bus is done by the 8292. Figure 3 is a typical controller interface using Intel's GPIB peripherals.

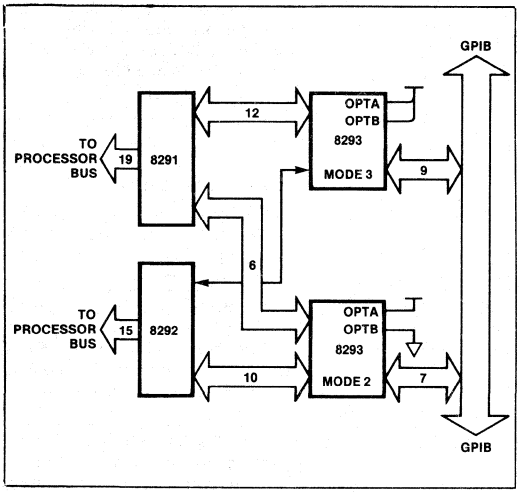

Figure 3. Talker/Listener/Controller Configuration

The internal RAM in the 8041A is used as a special purpose register bank for the 8292. Most of these registers (except for the interrupt flag) can be accessed through commands to the 8292. Table 2 identifies the registers used by the 8292 and how they are accessed.

Interrupt Status Register

D_7							D_0
SYC	ERR	SRQ	EV	X	IFCR	IBF	OBF

The 8292 can be configured to interrupt the microprocessor on one of several conditions. Upon receipt of the interrupt the microprocessor must read the 8292 interrupt status register to determine which event caused the interrupt, and then the appropriate subroutine can be performed. The interrupt status register is read with A_0 high. With the exception of OBF and IBF, these interrupts are enabled or disabled by the SPI interrupt mask. OBF and IBF have their own bits in the interrupt mask (OBFI and $\overline{\text{IBFI}}$).

OBF Output Buffer Full. A byte is waiting to be read by the microprocessor. This flag is cleared when the output data bus buffer is read.

IBF Input Buffer Full. The byte previously written by the microprocessor has not been read yet by the 8292. If another byte is written to the 8292 before this flag clears, data will be lost. IBF is cleared when the 8292 reads the data byte.

IFCR Interface Clear Received. The GPIB system controller has set IFC. The 8292 has become idle and is no longer in charge of the bus. The flag is cleared when the IACK command is issued.

EV Event Counter Interrupt. The requested number of blocks or data bytes has been transferred. The EV interrupt flag is cleared by the IACK command.

SRQ Service Request. Notifies the 8292 that a service request (SRQ) message has been received. It is cleared by the IACK command.

ERR Error occurred. The type of error can be determined by reading the error status register. This interrupt flag is cleared by the IACK command.

SYC System Controller Switch Change. Notifies the processor that the state of the system controller switch has changed. The actual state is contained in the GPIB Status Register. This flag is cleared by the IACK command.

Table 2. 8292 Registers

READ FROM 8292

	D_7							D_0	A_0
INTERRUPT STATUS	SYC	ERR	SRQ	EV	X	IFCR	IBF	OBF	1
ERROR FLAG	X	X	USER	X	X	$TOUT_3$	$TOUT_2$	$TOUT_1$	0*
CONTROLLER STATUS	CSBS	CA	X	X	SYCS	IFC	REN	SRQ	0*
GPIB (BUS) STATUS	REN	DAV	EOI	X	SYC	IFC	ANTI	SRQ	0*
EVENT COUNTER STATUS	D	D	D	D	D	D	D	D	0*
TIME OUT STATUS	D	D	D	D	D	D	D	D	0*

WRITE TO 8292

	D_7							D_0	A_0
INTERRUPT MASK	1	SPI	TCI	SYC	OBFI	IBFI	0	SRQ	0
ERROR MASK	0	0	USER	0	0	$TOUT_3$	$TOUT_2$	$TOUT_1$	0
COMMAND FIELD	1	1	1	OP	C	C	C	C	1
EVENT COUNTER	D	D	D	D	D	D	D	D	0*
TIME OUT	D	D	D	D	D	D	D	D	0*

Note: These registers are accessed by a special utility command, see page 6.

Interrupt Mask Register

1	SPI	TCI	SYC	OBFI	$\overline{IBFI}$	0	SRQ
D_7							D_0

The Interrupt Mask Register is used to enable features and to mask the SPI and TCI interrupts. The flags in the Interrupt Status Register will be active even when masked out. The Interrupt Mask Register is written when A_0 is low and reset by the RINM command. When the register is read, D_1 and D_7 are undefined. An interrupt is enabled by setting the corresponding register bit.

SRQ Enable interrupts on SRQ received.

$\overline{IBFI}$ Enable interrupts on input buffer empty.

OBFI Enable interrupts on output buffer full.

SYC Enable interrupts on a change in the system controller switch.

TCI Enable interrupts on the task completed.

SPI Enable interrupts on special events.

NOTE: The event counter is enabled by the GSEC command, the error interrupt is enabled by the error mask register, and IFC cannot be masked (it will always cause an interrupt).

Controller Status Register

CSBS	CA	X	X	SYCS	IFC	REN	SRQ
D_7							D_0

The Controller Status Register is used to determine the status of the controller function. This register is accessed by the RCST command.

SRQ Service Request line active (CSRS).

REN Sending Remote Enable.

IFC Sending or receiving interface clear.

SYCS System Controller Switch Status (SACS).

CA Controller Active (CACS + CAWS + CSWS).

CSBS Controller Stand-by State (CSBS, CA) = (0,0) — Controller Idle

GPIB Bus Status Register

REN	DAV	EOI	X	SYC	IFC	ATNI	SRQ
D_7							D_0

This register contains GPIB bus status information. It can be used by the microprocessor to monitor and manage the bus. The GPIB Bus Register can be read using the RBST command.

Each of these status bits reflect the current status of the corresponding pin on the 8292.

SRQ Service Request

ATNI Attention In

IFC Interface Clear

SYC System Controller Switch

EOI End or Identify

DAV Data Valid

REN Remote Enable

Event Counter Register

D_7	D_6	D_5	D_4	D_3	D_2	D_1	D_0

The Event Counter Register contains the initial value for the event counter. The counter can count pulses on pin 39 of the 8292 (COUNT). It can be connected to EOI or NDAC to count blocks or bytes respectively during standby state. A count of zero equals 256. This register cannot be read, and is written using the WEVC command.

Event Counter Status Register

D_7	D_6	D_5	D_4	D_3	D_2	D_1	D_0

This register contains the current value in the event counter. The event counter counts back from the initial value stored in the Event Counter Register to zero and then generates an Event Counter Interrupt. This register cannot be written and can be read using a REVC command.

Time Out Register

D_7	D_6	D_5	D_4	D_3	D_2	D_1	D_0

The Time Out Register is used to store the time used for the time out error function. See the individual timeouts (TOUT1, 2, 3) to determine the units of this counter. This Time Out Register cannot be read, and it is written with the WTOUT command.

Time Out Status Register

D_7	D_6	D_5	D_4	D_3	D_2	D_1	D_0

This register contains the current value in the time out counter. The time out counter decrements from the original value stored in the Time Out Register. When zero is reached, the appropriate error interrupt is generated. If the register is read while none of the time out functions are active, the register will contain the last value reached the last time a function was active. The Time Out Status Register cannot be written, and it is read with the RTOUT command.

Error Flag Register

X	X	USER	X	X	$TOUT_3$	$TOUT_2$	$TOUT_1$
D_7							D_0

Four errors are flagged by the 8292 with a bit in the Error Flag Register. Each of these errors can be masked by the Error Mask Register. The Error Flag Register cannot be written, and it is read by the IACK command when the error flag in the Interrupt Status Register is set.

TOUT1 Time Out Error 1 occurs when the current controller has not stopped sending ATN after receiving the TCT message for the time period specified by the Time Out Register. Each count in the Time Out Register is at least 1800 t_{CY}. After flagging the error, the 8292 will remain in a loop trying to take control until the current controller stops sending ATN or a new command is written by the microprocessor. If a new command is written, the 8292 will return to the loop after executing it.

TOUT2 Time Out Error 2 occurs when the transmission between the addressed talker and listener has not started for the time period specified by the Time Out Register. Each count in the Time Out Register is at least 45 t_{CY}. This feature is only enabled when the controller is in the CSBS state.

TOUT3 Time Out Error 3 occurs when the handshake signals are stuck and the 8292 is not succeeding in taking control synchronously for the time period specified by the Time Out Register. Each count in the Time Out Register is at least 1800 t_{CY}. The 8292 will continue checking $\overline{ATNI}$ until it becomes true or a new command is received. After performing the new command, the 8292 will return to the $\overline{ATNI}$ checking loop.

USER User error occurs when request to assert IFC or REN was received and the 8292 was not the system controller.

Error Mask Register

0	0	USER	0	0	$TOUT_3$	$TOUT_2$	$TOUT_1$
D_7							D_0

The Error Mask Register is used to mask the interrupt from a particular type of error. Each type of error interrupt is enabled by setting the corresponding bit in the Error Mask Register. This register can be read with the RERM command and written with A_0 low.

Command Register

1	1	1	OP	C	C	C	C
D_7							D_0

Commands are performed by the 8292 whenever a byte is written with A_0 high. There are two categories of commands distinguished by the OP bit (bit 4). The first category is the operation command (OP = 1). These commands initiate some action on the interface bus. The second category is the utility commands (OP = 0). These commands are used to aid the communication between the processor and the 8292.

OPERATION COMMANDS

Operation commands initiate some action on the GPIB interface bus. It is using these commands that the control functions such as polling, taking and passing control, and system controller functions are performed. A TCI interrupt is generated upon successful completion of each of these functions.

F0 — SPCNI — Stop Counter Interrupts

This command disables the internal counter interrupt so that the 8292 will stop interrupting the master on event counter underflows. However, the counter will continue counting and its contents can still be used.

F1 — GIDL — Go To Idle

This command is used during the transfer of control procedure while transferring control to another controller. The 8292 will respond to this command only if it is in the active state. $\overline{ATNO}$ will go high, and $\overline{CIC}$ will be high so that this 8292 will no longer be driving the ATN line on the GPIB interface bus.

F2 — RST — Reset

This command has the same effect as asserting the external reset on the 8292. For details, refer to the reset procedure described later.

F3 — RSTI — Reset Interrupts

This command resets any pending interrupts and clears the error flags. The 8292 will not return to any loop it was in (such as from the time out interrupts).

F4 — GSEC — Go To Standby, Enable Counting

The function causes $\overline{ATNO}$ to go high and the counter will be enabled. If the 8292 was not the active controller, this command will exit immediately. If the 8292 is the active controller, the counter will be loaded with the value stored in the Event Counter Register, and the internal interrupt will be enabled so that when the counter reaches zero, the SPI interrupt will be generated. SPI will be generated every 256 counts thereafter until the controller exits the standby state or the SPCNI command is written. An initial count of 256 (zero in the Event Counter Register) will be used if the WEVC command is not executed. If the data transmission does not start, a TOUT2 error will be generated.

F5 — EXPP — Execute Parallel Poll

This command initiates a parallel poll by asserting ATN and EOI (IDY message) true. The 8291 should be previously configured as a listener. Upon detection of DAV true, the 8291 enters ACDS and latches the parallel poll response (PPR) byte into its data in register. The master will be interrupted by the 8291 BI interrupt when the PPR byte is available. No interrupts except the $\overline{IBFI}$ will be generated by the 8292. The 8292 will respond to this command only when it is the active controller.

F6 — GTSB — Go To Standby

If the 8292 is the active controller, $\overline{ATNO}$ will go high then TCI will be generated. If the data transmission does not start, a TOUT2 error will be generated.

F7 — SLOC — Set Local Mode

If the 8292 is the system controller, then REN will be asserted false for at least 100 μsec. If it is not the system controller, the User Error bit will be set in the Error Flag Register.

F8 — SREM — Set Interface To Remote Control

This command will set REN true if this 8292 is the system controller. If not, the User Error bit will be set in the Error Flag Register.

F9 — ABORT — Abort All Operation, Clear Interface

This command will cause IFC to be asserted true for at least 100 μsec if this 8292 is the system controller. If it is in CIDS, it will take control over the bus (see the TCNTR command).

FA — TCNTR — Take Control

The transfer of control procedure is coordinated by the master with the 8291 and 8292. When the master receives a TCT message from the 8291, it should issue the TCNTR command to the 8292. The following events occur to take control:

1. The 8292 checks to see if it is in CIDS, and if not, it exits.
2. Then $\overline{ATNI}$ is checked until it becomes high. If the current controller does not release ATN for the time specified by the Time Out Register, then a TOUT1 error is generated. The 8292 will return to this loop after an error or any command except the RST and RSTI commands.
3. After the current controller releases ATN, the 8292 will assert $\overline{ATNO}$ and $\overline{CIC}$ low.
4. Finally, the TCI interrupt is generated to inform the master that it is in control of the bus.

FC — TCASY — Take Control Asynchronously

TCAS transfers the 8292 from CSBS to CACS independent of the handshake lines. If a bus hangup is detected (by an error flag), this command will force the 8292 to take control (asserting ATN) even if the AH function is not in ANRS (Acceptor Not Ready State). This command should be used very carefully since it may cause the loss of a data byte. Normally, control should be taken synchronously. After checking the controller function for being in the CSBS (else it will exit immediately), $\overline{ATNO}$ will go low, and a TCI interrupt will be generated.

FD — TCSY — Take Control Synchronously

There are two different procedures used to transfer the 8292 from CSBS to CACS depending on the state of the 8291 in the system. If the 8291 is in "continuous AH cycling" mode (Aux. Reg. A0 = A1 = 1), then the following procedure should be followed:

1. The master microprocessor stops the continuous AH cycling mode in the 8291;
2. The master reads the 8291 Interrupt Status 1 Register;
3. If the END bit is set, the master sends the TCSY command to the 8292;
4. If the END bit was not set, the master reads the 8291 Data In Register and then waits for another BI interrupt from the 8291. When it occurs, the master sends the 8292 the TCSY command.

If the 8291 is not in AH cycling mode, then the master just waits for a BI interrupt and then sends the TCSY command. After the TCSY command has been issued, the 8292 checks for $\overline{CSBS}$. If $\overline{CSBS}$, then it exits the routine. Otherwise, it then checks the DAV bit in the GPIB status. When DAV becomes false, the 8292 will wait for at least 1.5 μsec. (T10) and then $\overline{ATNO}$ will go low. If DAV does not go low, a TOUT3 error will be generated.

FE — STCNI — Start Counter Interrupts

This command enables the internal counter interrupt. The counter is enabled by the GSEC command.

UTILITY COMMANDS

All these commands are either Read or Write to registers in the 8292. Upon completion of Read commands, the TCI (Task Completed Interrupt) will be generated. Note that writing to the Error Mask Register and the Interrupt Mask Register are done directly.

E1 — WTOUT — Write To Time Out Register

The byte written to the data bus buffer (with $A_0 = 0$) following this command will determine the time used for the time out function. Since this function is implemented in software, this will not be an accurate time measurement. This feature is enable or disable by the Error Mask Register. No interrupts except for the $\overline{IBFI}$ will be generated upon completion.

E2 — WEVC — Write To Event Counter

The byte written to the data bus buffer (with $A_0 = 0$) following this command will be loaded into the Event Counter Register and the Event Counter Status for byte counting or EOI counting. Only $\overline{IBFI}$ will indicate completion of this command.

E3 — REVC — Read Event Counter Status

This command transfers the contents of the Event Counter into the data bus buffer. A TCI is generated when the data is available in the data bus buffer.

E4 — RERF — Read Error Flag Register

This command transfers the contents of the Error Flag Register into the data bus buffer. A TCI is generated when the data is available.

E5 — RINM — Read Interrupt Mask Register

This command transfers the contents of the Interrupt Mask Register into the data bus buffer. This register is available to the processor so that it does not need to store this information elsewhere. A TCI is generated when the data is available in the data bus buffer.

E6 — RCST — Read Controller Status Register

This command transfers the contents of the Controller Status Register into the data bus buffer and a TCI interrupt is generated.

E7 — RBST — Read GPIB Bus Status Register

This command transfers the contents of the GPIB Bus Status Register into the data bus buffer, and a TCI interrupt is generated when the data is available.

E9 — RTOUT — Read Time Out Status Register

This command transfers the contents of the Time Out Status Register into the data bus buffer, and a TCI interrupt is generated when the data is available.

EA — RERM — Read Error Mask Register

This command transfers the contents of the Error Mask Register to the data bus buffer so that the processor does not need to store this information elsewhere. A TCI interrupt is generated when the data is available.

Interrupt Acknowledge

SYC	ERR	SRQ	EV	1	IFCR	1	1
D_7							D_0

Each named bit in an Interrupt Acknowledge (IACK) corresponds to a flag in the Interrupt Status Register. When the 8292 receives this command, it will clear the SPI and the corresponding bits in the Interrupt Status Register. If not all the bits were cleared, then the SPI will be set true again. If the error flag is not acknowledged by the IACK command, then the Error Flag Register will be transferred to the data bus buffer, and a TCI will be generated.

NOTE: XXXX1X11 is an undefined operation or utility command, so no conflict exists between the IACK operation and utility commands.

SYSTEM OPERATION

8292 To Master Processor Interface

Communication between the 8292 and the Master Processor can be either interrupt based communication or based upon polling the interrupt status register in predetermined intervals.

Interrupt Based Communication

Four different interrupts are available from the 8292:

OBFI Output Buffer Full Interrupt
$\overline{\text{IBFI}}$ Input Buffer Not Full Interrupt
TCI Task Completed Interrupt
SPI Special Interrupt

Each of the interrupts is enabled or disabled by a bit in the interrupt mask register. Since OBFI and $\overline{\text{IBFI}}$ are directly connected to the OBF and IBF flags, the master can write a new command to the input data bus buffer as soon as the previous command has been read.

The TCI interrupt is useful when the master is sending commands to the 8292. The pending TCI will be cleared with each new command written to the 8292. Commands sent to the 8292 can be divided into two major groups:

1. Commands that require response back from the 8292 to the master, e.g., reading register.
2. Commands that initiate some action or enable features but do not require response back from the 8292, e.g., enable data bus buffer interrupts.

With the first group, the TCI interrupt will be used to indicate that the required response is ready in the data bus buffer and the master may continue and read it. With the second group, the interrupt will be used to indicate completion of the required task, so that the master may send new commands.

The SPI should be used when immediate information or special events is required (see the Interrupt Status Register).

"Polling Status" Based Communication

When interrupt based communication is not desired, all interrupts can be masked by the interrupt mask register. The communication with the 8292 is based upon sequential poll of the interrupt status register. By testing the OBF and IBF flags, the data bus buffer status is determined while special events are determined by testing the other bits.

Receiving IFC

The IFC pulse defined by the IEEE-488 standard is at least 100 μsec. In this time, all operation on the bus should be aborted. Most important, the current controller (the one that is in charge at that time) should stop sending ATN or EOI. Thus, IFC must externally gate $\overline{\text{CIC}}$ (controller in charge) and $\overline{\text{ATNO}}$ to ensure that this occurs.

Reset and Power Up Procedure

After the 8292 has been reset either by the external reset pin, the device being powered on, or a RST command, the following sequential events will take place:

1. All outputs to the GPIB interface will go high ($\overline{\text{SRQ}}$, $\overline{\text{ATNI}}$, $\overline{\text{IFC}}$, SYC, CLTH, $\overline{\text{ATNO}}$, $\overline{\text{CIC}}$, TCI, SPI, $\overline{\text{EOI}}$, OBFI, $\overline{\text{IBFI}}$, $\overline{\text{DAV}}$, $\overline{\text{REV}}$).
2. The four interrupt outputs (TCI, SPI, OBFI, $\overline{\text{IBFI}}$) and CLTH output will go low.
3. The following registers will be cleared:
   Interrupt Status
   Interrupt Mask
   Error Flag
   Error Mask
   Time Out
   Event Counter (= 256), Counter is disabled.
4. If the 8292 is the system controller, an ABORT command will be executed, the 8292 will become the controller in charge, and it will enter the CACS state.

   If it is not the system controller, it will remain in CIDS.

System Configuration

The 8291 and 8292 must be interfaced to an IEEE-488 bus meeting a variety of specifications including drive capability and loading characteristics. To interface the 8291 and the 8292 without the 8293's, several external gates are required, using a configuration similar to that used in Figure 5.

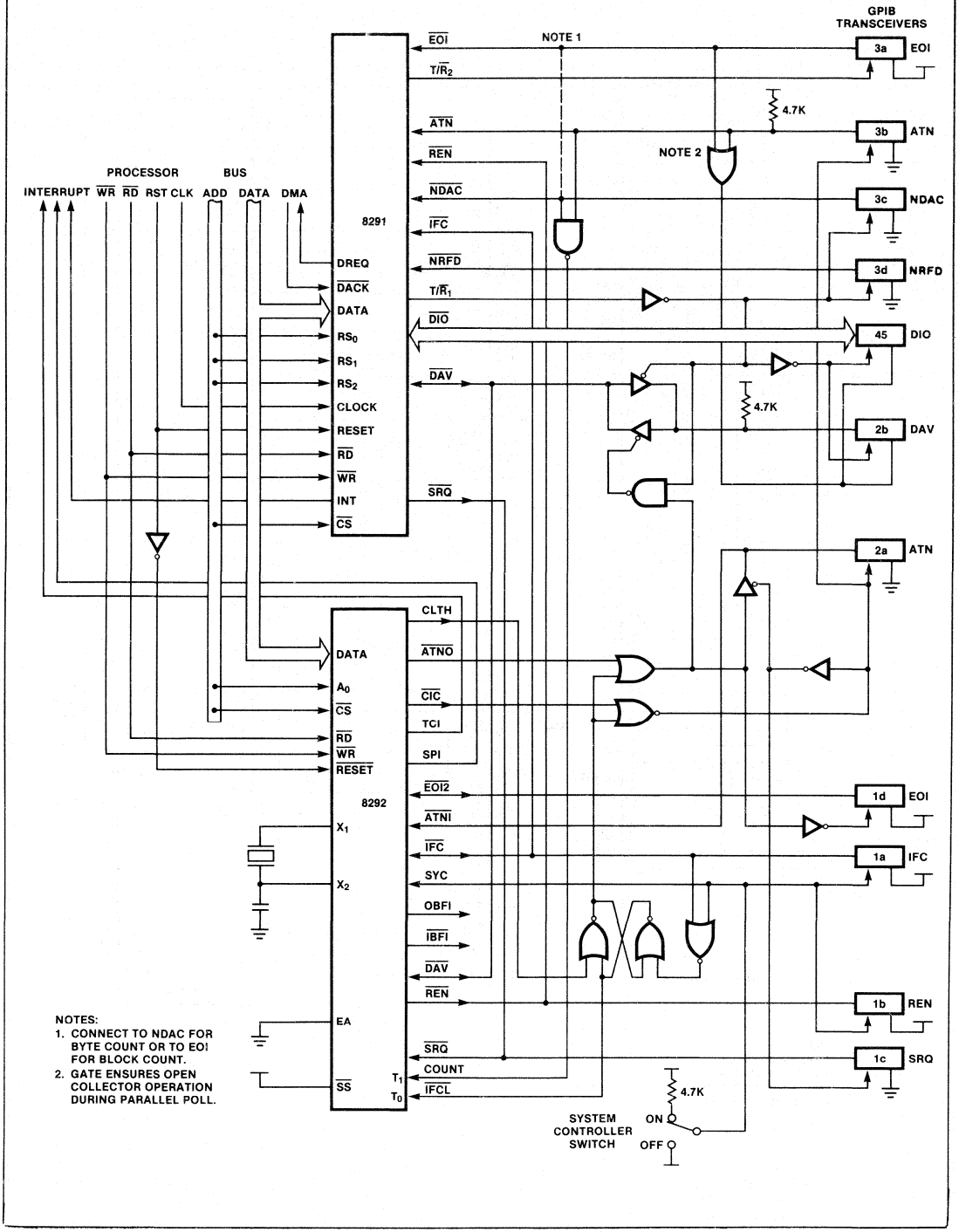

Figure 4. 8291 and 8292 System Configuration

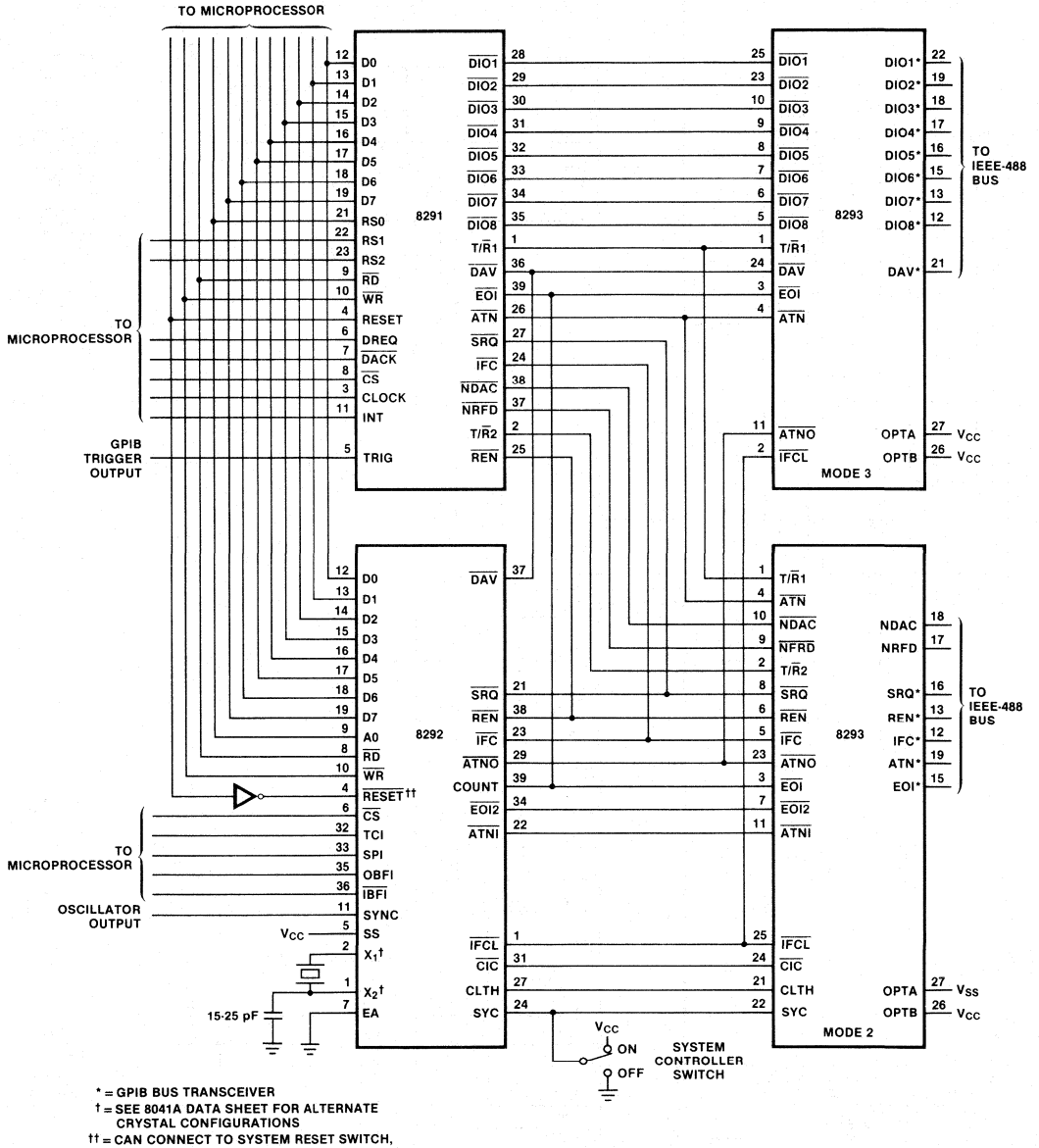

* = GPIB BUS TRANSCEIVER
† = SEE 8041A DATA SHEET FOR ALTERNATE CRYSTAL CONFIGURATIONS
†† = CAN CONNECT TO SYSTEM RESET SWITCH, SEE 8041A DATA SHEET

Figure 5. 8291, 8292, and 8293 System Configuration

ABSOLUTE MAXIMUM RATINGS*

Ambient Temperature Under Bias . . . . . 0°C to 70°C
Storage Temperature . . . . . −65°C to +150°C
Voltage on Any Pin With Respect to Ground . . . . . 0.5V to +7V
Power Dissipation . . . . . 1.5 Watt

NOTICE: Stresses above those listed under "Absolute Maximum Ratings" may cause permanent damage to the device. This is a stress rating only and functional operation of the device at these or any other conditions above those indicated in the operational sections of this specification is not implied. Exposure to absolute maximum rating conditions for extended periods may affect device reliability.

D.C. CHARACTERISTICS (T_A = 0°C to 70°C, V_{SS} = 0V: 8292, V_{CC} = ±5V ±10%)

Symbol	Parameter	Min.	Max.	Unit	Test Conditions
V_{IL1}	Input Low Voltage (All Except X_1, X_2, $\overline{RESET}$)	−0.5	0.8	V	
V_{IL2}	Input Low Voltage (X_1, X_2, $\overline{RESET}$)	−0.5	0.6	V	
V_{IH1}	Input High Voltage (All Except X_1, X_2, $\overline{RESET}$)	2.2	V_{CC}	V	
V_{IH2}	Input High Voltage (X_1, X_2, $\overline{RESET}$)	3.8	V_{CC}	V	
V_{OL1}	Output Low Voltage (D_0–D_7)		0.45	V	I_{OL} = 2.0 mA
V_{OL2}	Output Low Voltage (All Other Outputs)		0.45	V	I_{OL} = 1.6 mA
V_{OH1}	Output High Voltage (D_0–D_7)	2.4		V	I_{OH} = −400 μA
V_{OH2}	Output High Voltage (All Other Outputs)	2.4		V	I_{OH} = −50 μA
I_{IL}	Input Leakage Current (COUNT, $\overline{IFCL}$, $\overline{RD}$, $\overline{WR}$, $\overline{CS}$, A_0)		±10	μA	$V_{SS} \leq V_{IN} \leq V_{CC}$
I_{OZ}	Output Leakage Current (D_0–D_7, High Z State)		±10	μA	$V_{SS}+0.45 \leq V_{IN} \leq V_{CC}$
I_{LI1}	Low Input Load Current (Pins 21-24, 27-38)		0.5	mA	V_{IL} = 0.8V
I_{LI2}	Low Input Load Current ($\overline{RESET}$)		0.2	mA	V_{IL} = 0.8V
I_{CC}	Total Supply Current		125	mA	Typical = 65 mA
I_{IH}	Input High Leakage Current (Pins 21–24, 27–38)		100	μA	$V_{IN} = V_{CC}$
C_{IN}	Input Capacitance		10	pF	
$C_{I/O}$	I/O Capacitance		20	pF	

A.C. CHARACTERISTICS (T_A = 0°C to 70°C, V_{SS} = 0V: 8292, V_{CC} = +5V ±10%)

DBB READ

Symbol	Parameter	Min.	Max.	Unit	Test Conditions
t_{AR}	$\overline{CS}$, A_0 Setup to $\overline{RD}$↓	0		ns	
t_{RA}	$\overline{CS}$, A_0 Hold After $\overline{RD}$↑	0		ns	
t_{RR}	$\overline{RD}$ Pulse Width	250		ns	
t_{AD}	$\overline{CS}$, A_0 to Data Out Delay		225	ns	C_L = 150 pF
t_{RD}	$\overline{RD}$↓ to Data Out Delay		225	ns	C_L = 150 pF
t_{DF}	$\overline{RD}$↑ to Data Float Delay		100	ns	
t_{CY}	Cycle Time	2.5	15	μs	

DBB WRITE

Symbol	Parameter	Min.	Max.	Unit	Test Conditions
t_{AW}	CS, A_0 Setup to WR↓	0		ns	
t_{WA}	CS, A_0 Hold After WR↑	0		ns	
t_{WW}	WR Pulse Width	250		ns	
t_{DW}	Data Setup to WR↑	150		ns	
t_{WD}	Data Hold After WR↓	0		ns	

COMMAND TIMINGS[1,3]

Code	Name	Execution Time	$\overline{IBFI}$↑	TCI[2]	SPI	$\overline{ATNO}$	$\overline{CIC}$	$\overline{IFC}$	$\overline{REN}$	$\overline{EOI}$	$\overline{DAV}$	Comments
E1	WTOUT	63	24									
E2	WEVC	63	24									
E3	REVC	71	24	51								
E4	RERF	67	24	47								
E5	RINM	69	24	49								
E6	RCST	97	24	77								
E7	RBST	92	24	72								
E8												
E9	RTOUT	69	24	49								
EA	RERM	69	24	49								
F0	SPCNI	53	24									Count Stops After 39
F1	GIOL	88	24	70		↑61	↑61					
F2	RST	94	24		↓52							Not System Controller
F2	RST	214	24	192	↓52	↓179	↓174	↓101				System Controller
F3	RSTI	61	24									
F4	GSEC	125	24	107		↑98						
F5	EXPP	75	24						↓53 ↑59	↓55 ↑57		
F6	GTSB	118	24	100		↑91						
F7	SLOC	73	24	55				↑46				
F8	SREM	91	24	73				↓64				
F9	ABORT	155	24	133		↓120	↓115	↓42				
FA	TCNTR	108	24	86		↓71	↓68					
FC	TCAS	92	24	67		↓55						
FD	TCSY	115	24	91		↓80						
FE	STCNI	59	24									Starts Count After 43
PIN	RESET	29	—	↓7	↓7							Not System Controller
X	IACK	116	—		↓73 ↑98							If Interrupt Pending

Notes:
1. All times are multiples of t_{CY} from the 8041A command interrupt.
2. TCI clears after 7 t_{CY} on all commands.
3. ↑ indicates a level transition from low to high, ↓ indicates a high to low transition.

A.C. TESTING INPUT, OUTPUT WAVEFORM

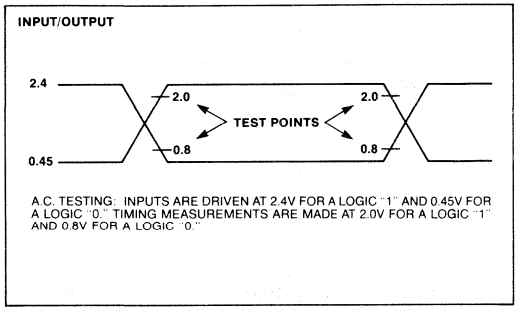

A.C. TESTING LOAD CIRCUIT

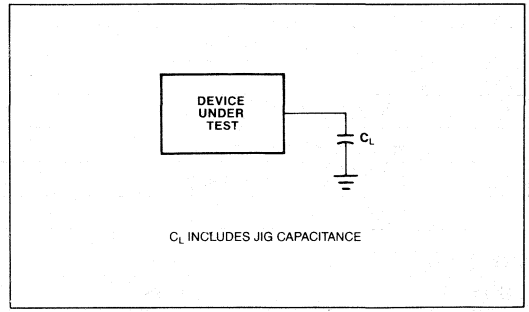

CLOCK DRIVER CIRCUITS

CRYSTAL OSCILLATOR MODE

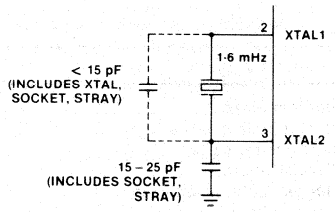

CRYSTAL SERIES RESISTANCE SHOULD BE
<75Ω AT 6 MHz; <180Ω AT 3.6 MHz.

DRIVING FROM EXTERNAL SOURCE

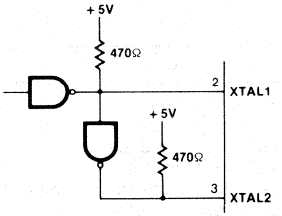

BOTH XTAL1 AND XTAL2 SHOULD BE DRIVEN.
RESISTORS TO V_{CC} ARE NEEDED TO ENSURE V_{IH} = 3.8V
IF TTL CIRCUITRY IS USED.

LC OSCILLATOR MODE

L	C	NOMINAL f
45 μH	20 pF	5.2 MHz
120 μH	20 pF	3.2 MHz

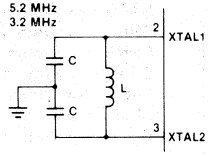

$$f \approx \frac{1}{2\pi\sqrt{LC'}}$$

$$C' = \frac{C + 3C_{PP}}{2}$$

$C_{PP} \approx 5 - 10$ pF PIN-TO-PIN CAPACITANCE

EACH C SHOULD BE APPROXIMATELY 20 pF, INCLUDING STRAY CAPACITANCE.

WAVEFORMS

READ OPERATION—DATA BUS BUFFER REGISTER

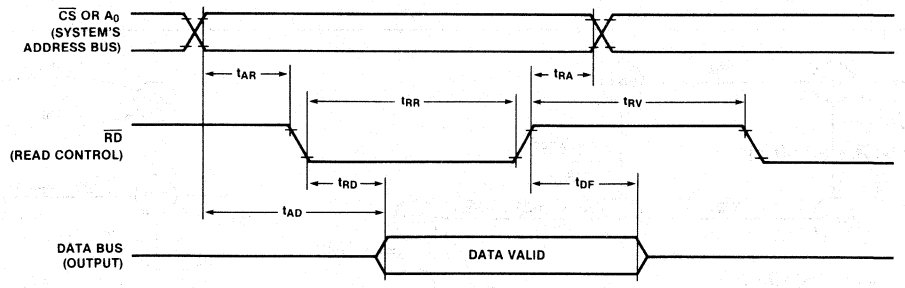

WRITE OPERATION — DATA BUS BUFFER REGISTER

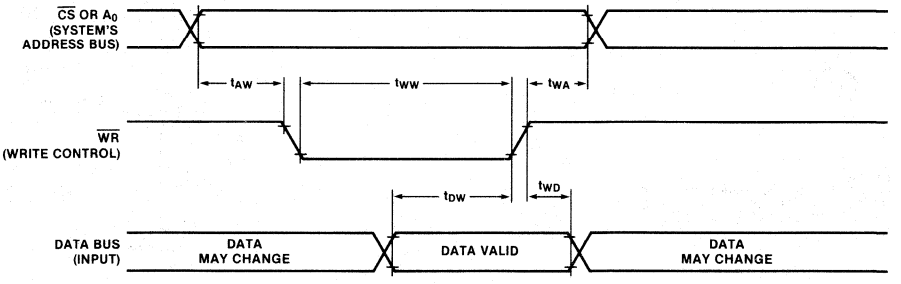

APPENDIX

The following tables and state diagrams were taken from the IEEE Standard Digital Interface for Programmable Instrumentation, IEEE Std. 488-1978. This document is the official standard for the GPIB bus and can be purchased from IEEE, 345 East 47th St., New York, NY 10017.

C MNEMONICS

Messages	Interface States
pon = power on	CIDS = controller idle state
rsc = request system control	CADS = controller addressed state
rpp = request parallel poll	CTRS = controller transfer state
gts = go to standby	CACS = controller active state
tca = take control asynchronously	CPWS = controller parallel poll wait state
tcs = take control synchronously	CPPS = controller parallel poll state
sic = send interface clear	CSBS = controller standby state
sre = send remote enable	CSHS = controller standby hold state
IFC = interface clear	CAWS = controller active wait state
ATN = attention	CSWS = controller synchronous wait state
TCT = take control	CSRS = controller service requested state
	CSNS = controller service not requested state
	SNAS = system control not active state
	SACS = system control active state
	SRIS = system control remote enable idle state
	SRNS = system control remote enable not active state
	SRAS = system control remote enable active state
	SIIS = system control interface clear idle state
	SINS = system control interface clear not active state
	SIAS = system control interface clear active state
	(ACDS) = accept data state (AH function)
	(ANRS) = acceptor not ready state (AH function)
	(SDYS) = source delay state (SH function)
	(STRS) = source transfer state (SH function)
	(TADS) = talker addressed state (T function)

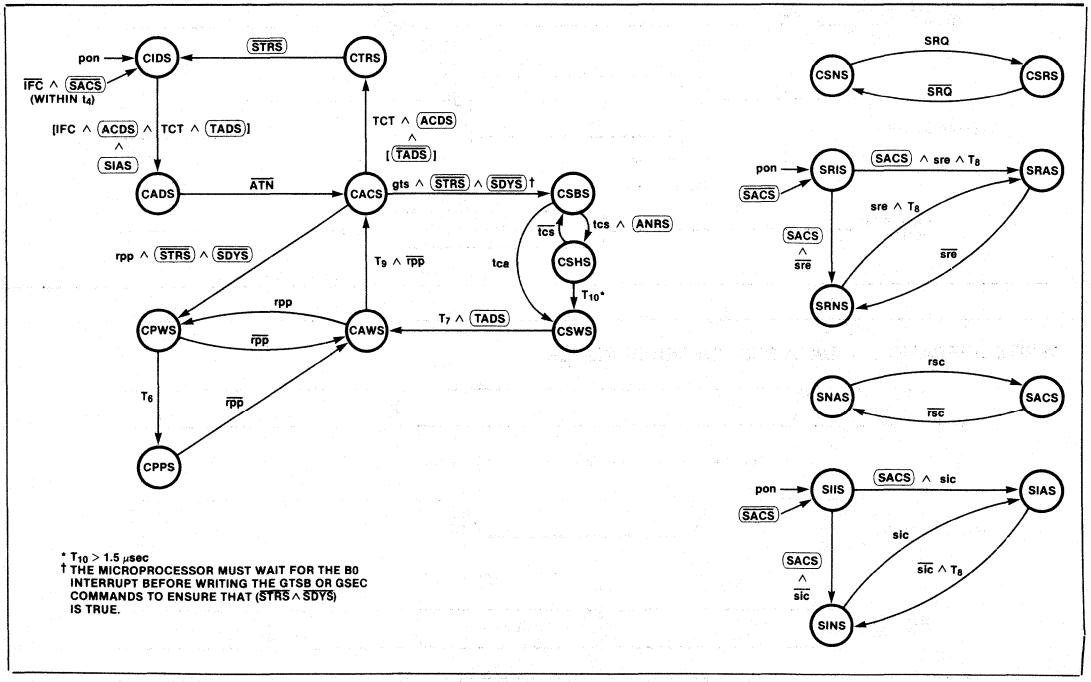

Figure A.1. C State Diagram

REMOTE MESSAGE CODING

Mnemonic	Message Name		TYPE	CLASS	Bus Signal Line(s) and Coding That Asserts the True Value of the Message: DIO8	7	6	5	4	3	2	DIO1	NDAV	NRFD	NDAC	ATN	EOI	SRQ	IFC	REN
ACG	Addressed Command Group		M	AC	Y	0	0	0	X	X	X	X	X	X	X	1	X	X	X	X
ATN	Attention		U	UC	X	X	X	X	X	X	X	X	X	X	X	1	X	X	X	X
DAB	Data Byte	(Notes 1, 9)	M	DD	D8	D7	D6	D5	D4	D3	D2	D1	X	X	X	0	X	X	X	X
DAC	Data Accepted		U	HS	X	X	X	X	X	X	X	X	X	X	0	X	X	X	X	X
DAV	Data Valid		U	HS	X	X	X	X	X	X	X	X	1	X	X	X	X	X	X	X
DCL	Device Clear		M	UC	Y	0	0	1	0	1	0	0	X	X	X	1	X	X	X	X
END	End		U	ST	X	X	X	X	X	X	X	X	X	X	X	0	1	X	X	X
EOS	End of String	(Notes 2, 9)	M	DD	E8	E7	E6	E5	E4	E3	E2	E1	X	X	X	0	X	X	X	X
GET	Group Execute Trigger		M	AC	Y	0	0	0	1	0	0	0	X	X	X	1	X	X	X	X
GTL	Go to Local		M	AC	Y	0	0	0	0	0	0	1	X	X	X	1	X	X	X	X
IDY	Identify		U	UC	X	X	X	X	X	X	X	X	X	X	X	X	1	X	X	X
IFC	Interface Clear		U	UC	X	X	X	X	X	X	X	X	X	X	X	X	X	X	1	X
LAG	Listen Address Group		M	AD	Y	0	1	X	X	X	X	X	X	X	X	1	X	X	X	X
LLO	Local Lock Out		M	UC	Y	0	0	1	0	0	0	1	X	X	X	1	X	X	X	X
MLA	My Listen Address	(Note 3)	M	AD	Y	0	1	L5	L4	L3	L2	L1	X	X	X	1	X	X	X	X
MTA	My Talk Address	(Note 4)	M	AD	Y	1	0	T5	T4	T3	T2	T1	X	X	X	1	X	X	X	X
MSA	My Secondary Address	(Note 5)	M	SE	Y	1	1	S5	S4	S3	S2	S1	X	X	X	1	X	X	X	X
NUL	Null Byte		M	DD	0	0	0	0	0	0	0	0	X	X	X	X	X	X	X	X
OSA	Other Secondary Address		M	SE	(OSA = SCG ∧ $\overline{\text{MSA}}$)															
OTA	Other Talk Address		M	AD	(OTA = TAG ∧ $\overline{\text{MTA}}$)															
PCG	Primary Command Group		M	—	(PCG = ACG ∨ UCG ∨ LAG ∨ TAG)															
PPC	Parallel Poll Configure		M	AC	Y	0	0	0	0	1	0	1	X	X	X	1	X	X	X	X
PPE	Parallel Poll Enable	(Note 6)	M	SE	Y	1	1	0	S	P3	P2	P1	X	X	X	1	X	X	X	X
PPD	Parallel Poll Disable	(Note 7)	M	SE	Y	1	1	1	D4	D3	D2	D1	X	X	X	1	X	X	X	X
PPR1	Parallel Poll Response 1	(Note 10)	U	ST	X	X	X	X	X	X	X	1	X	X	X	1	1	X	X	X
PPR2	Parallel Poll Response 2		U	ST	X	X	X	X	X	X	1	X	X	X	X	1	1	X	X	X
PPR3	Parallel Poll Response 3		U	ST	X	X	X	X	X	1	X	X	X	X	X	1	1	X	X	X
PPR4	Parallel Poll Response 4		U	ST	X	X	X	X	1	X	X	X	X	X	X	1	1	X	X	X
PPR5	Parallel Poll Response 5		U	ST	X	X	X	1	X	X	X	X	X	X	X	1	1	X	X	X
PPR6	Parallel Poll Response 6		U	ST	X	X	1	X	X	X	X	X	X	X	X	1	1	X	X	X
PPR7	Parallel Poll Response 7		U	ST	X	1	X	X	X	X	X	X	X	X	X	1	1	X	X	X
PPR8	Parallel Poll Response 8		U	ST	1	X	X	X	X	X	X	X	X	X	X	1	1	X	X	X
PPU	Parallel Poll Unconfigure		M	UC	Y	0	0	1	0	1	0	1	X	X	X	1	X	X	X	X
REN	Remote Enable		U	UC	X	X	X	X	X	X	X	X	X	X	X	X	X	X	X	1
RFD	Ready for Data		U	HS	X	X	X	X	X	X	X	X	X	0	X	X	X	X	X	X
RQS	Request Service	(Note 9)	U	ST	X	1	X	X	X	X	X	X	X	X	X	0	X	X	X	X
SCG	Secondary Command Group		M	SE	Y	1	1	X	X	X	X	X	X	X	X	1	X	X	X	X
SDC	Selected Device Clear		M	AC	Y	0	0	0	0	1	0	0	X	X	X	1	X	X	X	X
SPD	Serial Poll Disable		M	UC	Y	0	0	1	1	0	0	1	X	X	X	1	X	X	X	X
SPE	Serial Poll Enable		M	UC	Y	0	0	1	1	0	0	0	X	X	X	1	X	X	X	X
SRQ	Service Request		U	ST	X	X	X	X	X	X	X	X	X	X	X	X	X	1	X	X
STB	Status Byte	(Notes 8, 9)	M	ST	S8	X	S6	S5	S4	S3	S2	S1	X	X	X	0	X	X	X	X
TCT	Take Control		M	AC	Y	0	0	0	1	0	0	1	X	X	X	1	X	X	X	X
TAG	Talk Address Group		M	AD	Y	1	0	X	X	X	X	X	X	X	X	1	X	X	X	X
UCG	Universal Command Group		M	UC	Y	0	0	1	X	X	X	X	X	X	X	1	X	X	X	X
UNL	Unlisten		M	AD	Y	0	1	1	1	1	1	1	X	X	X	1	X	X	X	X
UNT	Untalk	(Note 11)	M	AD	Y	1	0	1	1	1	1	1	X	X	X	1	X	X	X	X

The 1/0 coding on ATN when sent concurrent with multiline messages has been added to this revision for interpretive convenience.

NOTES:

1. D1-D8 specify the device dependent data bits.
2. E1-E8 specify the device dependent code used to indicate the EOS message.
3. L1-L5 specify the device dependent bits of the device's listen address.
4. T1-T5 specify the device dependent bits of the device's talk address.
5. S1-S5 specify the device dependent bits of the device's secondary address.
6. S specifies the sense of the PPR.

   Response = $\overline{S \oplus ist}$

P1-P3 specify the PPR message to be sent when a parallel poll is executed.

P3	P2	P1	PPR Message
0	0	0	PPR1
.	.	.	.
.	.	.	.
.	.	.	.
1	1	1	PPR8

7. D1-D4 specify don't-care bits that shall not be decoded by the receiving device. It is recommended that all zeroes be sent.
8. S1-S6, S8 specify the device dependent status. (DIO7 is used for the RQS message.)
9. The source of the message on the ATN line is always the C function, whereas the messages on the DIO and EOI lines are enabled by the T function.
10. The source of the messages on the ATN and EOI lines is always the C function, whereas the source of the messages on the DIO lines is always the PP function.
11. This code is provided for system use, see 6.3.

PRELIMINARY

8293
GPIB TRANSCEIVER

- Nine Open-collector or Three-state Line Drivers
- 48 mA Sink Current Capability on Each Line Driver
- Nine Schmitt-type Line Receivers
- High Capacitance Load Drive Capability
- Single 5V Power Supply
- 28-Pin Package
- Low Power HMOS Design
- On-chip Decoder for Mode Configuration
- Power Up/Power Down Protection to Prevent Disrupting the IEEE Bus
- Connects with the 8291A and 8292 to Form an IEEE Standard 488 Interface Talker/Listener/Controller with no Additional Components
- Only Two 8293's Required per GPIB Interface
- On-Chip IEEE-488 Bus Terminations

The Intel® 8293 GPIB Transceiver is a high-current, non-inverting buffer chip designed to interface the 8291A GPIB Talker/Listener, or the 8291A/8292 GPIB Talker/Listener/Controller combination, to the IEEE Standard 488-1978 Instrumentation Interface Bus. Each GPIB interface would contain two 8293 Bus Transceivers. In addition, the 8293 can also be used as a general-purpose bus driver.

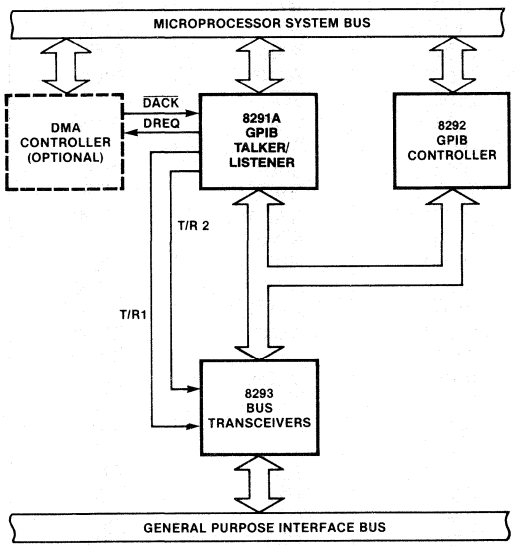

Figure 1. 8291A, 8292, 8293 Block Diagram

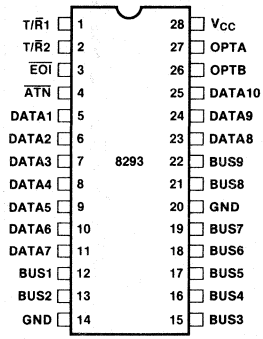

Figure 2. Pin Configuration

Table 1. Pin Description

Symbol	Pin No.	Type	Name and Function
BUS1-BUS9	12, 13, 15–19, 21, 22	I/O	**GPIB Lines, GPIB Side:** These are the IEEE-488 bus interface driver/receivers, or TTL-compatible inputs on the 8291A/8292 side, depending on the mode used. Their use is programmed by the two mode select pins, OPTA and OPTB.
DATA1-DATA10	5–11, 23–25	I/O	**GPIB Lines, 8291A/92 Side:** These are the pins to be connected to the 8291A and 8292 to interface with the GPIB. Their use is programmed by the two mode select pins, OPTA and OPTB. All these pins are TTL compatible.
T/$\overline{R}$1	1	I	**Transmit Receive 1:** This pin controls the direction for NDAC, NRFD, DAV, and DIO1-DIO8. Input is TTL compatible.
T/$\overline{R}$2	2	I	**Transmit Receive 2:** This pin controls the direction for EOI. Input is TTL compatible.
$\overline{EOI}$	3	I/O	**End Or Identify:** This pin indicates the end of a multiple byte transfer or, in conjunction with ATN, addresses the device during a polling sequence. It connects to the 8291A and is switched between transmit and receive by T/$\overline{R}$2. This pin is TTL compatible.
$\overline{ATN}$	4	O	**Attention:** This pin is used by the 8291A to monitor the GPIB ATN control line. It specifies how data on the DIO lines is to be interpreted. This output is TTL compatible.
OPTA OPTB	27 26	I I	**Mode Select:** These two pins are to control the function of the 8293. A truth table of how they program the various modes is in Table 2.
V_{CC}	28	P.S.	**Voltage:** Positive power supply (5V ± 10%).
GND	14, 20	P.S.	**Ground:** Circuit ground.

Table 2. 8293 Mode Selection Pin Mapping

Pin Name	Pin No.	IEEE Implementation Name			
		Mode 0	Mode 1	Mode 2	Mode 3
OPTA	27	0	1	0	1
OPTB	26	0	0	1	1
DATA1	5	$\overline{IFC}$	$\overline{DIO8}$	$\overline{IFC}$	$\overline{DIO8}$
BUS1	12	IFC*	DIO8*	IFC*	DIO8*
DATA2	6	$\overline{REN}$	$\overline{DIO7}$	$\overline{REN}$	$\overline{DIO7}$
BUS2	13	REN*	DIO7*	REN*	DIO7*
DATA3	7	NC	$\overline{DIO6}$	$\overline{EOI2}$	$\overline{DIO6}$
BUS3	15	EOI*	DIO6*	EOI*	DIO6*
DATA4	8	$\overline{SRQ}$	$\overline{DIO5}$	$\overline{SRQ}$	$\overline{DIO5}$
BUS4	16	SRQ*	DIO5*	SRQ*	DIO5*
DATA5	9	$\overline{NRFD}$	$\overline{DIO4}$	$\overline{NRFD}$	$\overline{DIO4}$
BUS5	17	NRFD*	DIO4*	NRFD*	DIO4*
DATA6	10	$\overline{NDAC}$	$\overline{DIO3}$	$\overline{NDAC}$	$\overline{DIO3}$
BUS6	18	NDAC*	DIO3*	NDAC*	DIO3*
DATA7	11	T/$\overline{R}$IO1	NC	$\overline{ATNI}$	$\overline{ATNO}$
DATA8	23	T/$\overline{R}$IO2	$\overline{DIO2}$	$\overline{ATNO}$	$\overline{DIO2}$
BUS7	19	ATN*	DIO2*	ATN*	DIO2*
DATA9	24	$\overline{GIO1}$	$\overline{DAV}$	$\overline{CIC}$	$\overline{DAV}$
BUS8	21	GIO1*	DAV*	CLTH	DAV*
DATA10	25	$\overline{GIO2}$	$\overline{DIO1}$	$\overline{IFCL}$	$\overline{DIO1}$
BUS9	22	GIO2*	DIO1*	SYC	DIO1*
T/$\overline{R}$1	1	T/$\overline{R}$1	T/$\overline{R}$1	T/$\overline{R}$1	T/$\overline{R}$1
T/$\overline{R}$2	2	T/$\overline{R}$2	NC	T/$\overline{R}$2	$\overline{IFCL}$
$\overline{EOI}$	3	$\overline{EOI}$	$\overline{EOI}$	$\overline{EOI}$	$\overline{EOI}$
$\overline{ATN}$	4	$\overline{ATN}$	$\overline{ATN}$	$\overline{ATN}$	$\overline{ATN}$

***Note:** These pins are the IEEE-488 bus non-inverting driver/receivers. They include all the bus terminations required by the Standard and may be connected directly to the GPIB bus connector.

GENERAL DESCRIPTION

The 8293 is a bidirectional transceiver. It was designed to interface the Intel 8291A GPIB Talker/Listener and the Intel® 8292 GPIB Controller to the IEEE Standard 488-1978 Instrumentation Bus (also referred to as the GPIB). The Intel GPIB Transceiver meets or exceeds all of the electrical specifications defined in the IEEE Standard 488-1978, Section 3.3–3.5, including the bus termination specifications.

The 8293 can be hardware programmed to one of four modes of operation. These modes allow the 8293 to be configured to support both a Talker/Listener/Controller environment and a Talker/Listener environment. In addition, the 8293 can be used as a general-purpose, three-state (push-pull) or open-collector bus transceiver with nine receiver/drivers. Two modes each are used to support a Talker/Listener (see Figure 3) and a Talker/Listener/Controller environment (see Figure 4). Mode 1 is used in general-purpose environments.

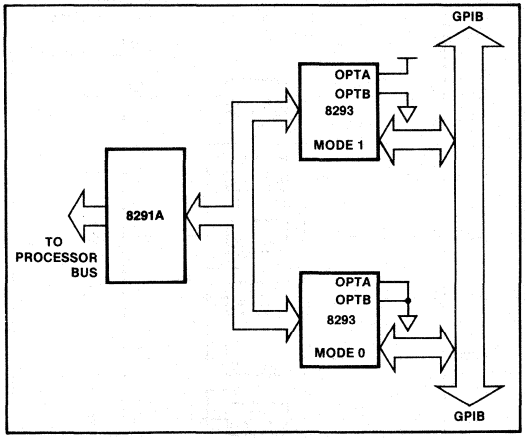

Figure 3. Talker/Listener Configuration

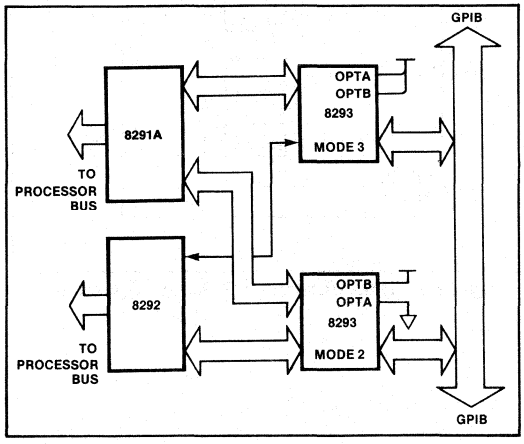

Figure 4. Talker/Listener/Controller Configuration

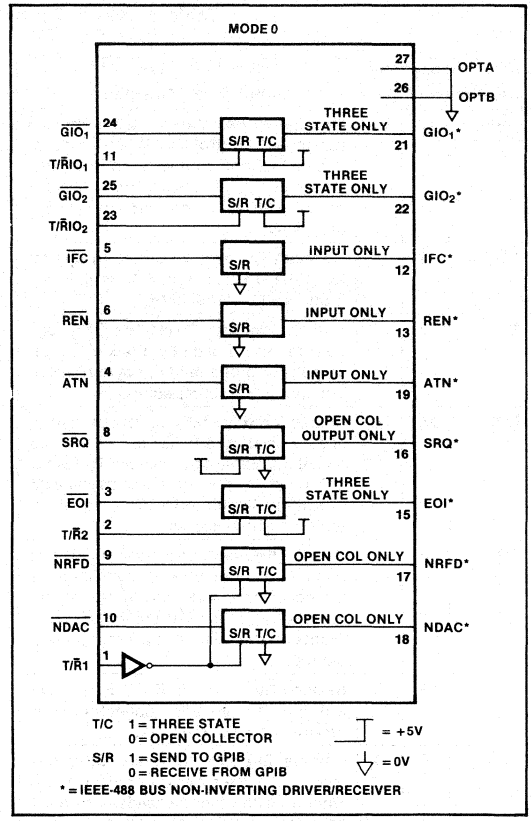

Figure 5. Talker/Listener Control Configuration

Table 3. Mode 0 Pin Description

Symbol	Pin No.	Type	Name and Function
T/$\overline{R1}$	1	I	**Transmit Receive 1** Direction control for NDAC and NRFD. If T/R1 is high, then NDAC* and NRFD* are receiving. Input is TTL compatible.
$\overline{NDAC}$	10	I/O	**Not Data Accepted:** Processor GPIB bus handshake control line; used to indicate the condition of acceptance of data by device(s). It is TTL compatible.
NDAC*	18	I/O	**Not Data Accepted:** IEEE GPIB bus handshake control line. When an input, it is a TTL compatible Schmitt-trigger. When an output, it is an open-collector driver with 48 mA sinking capability.
$\overline{NRFD}$	9	I/O	**Not Ready For Data:** Processor GPIB handshake control line; used to indicate the condition of readiness of device(s) to accept data. This pin is TTL compatible.

Table 3. Mode 0 Pin Description (Continued)

Symbol	Pin No.	Type	Name and Function
NRFD*	17	I/O	**Not Ready For Data:** IEEE GPIB bus handshake control line. When an input, it is a TTL compatible Schmitt-trigger. When an output, it is an open-collector driver with a 48 mA current sinking capability.
T/$\overline{R}$2	2	I	**Transmit Receive 2:** Direction control for EOI. If T/R2 is high, EOI* is sending. Input is TTL compatible.
$\overline{EOI}$	3	I/O	**End Or Identify:** Processor GPIB bus control line; is used by a talker to indicate the end of a multiple byte transfer. This pin is TTL compatible.
EOI*	15	I/O	**End Or Identify:** IEEE GPIB bus control line; is used by a talker to indicate the end of a multiple byte transfer. This pin is a three-state (push-pull) driver capable of sinking 48 mA and a TTL compatible receiver with hysteresis.
$\overline{SRQ}$	8	I	**Service Request:** Processor GPIB bus control line; used by a device to indicate the need for service and to request an interruption of the current sequence of events on the GPIB. It is a TTL compatible input.
SRQ*	16	O	**Service Request:** IEEE GPIB bus control line; it is an open collector driver capable of sinking 48 mA.
$\overline{REN}$	6	O	**Remote Enable:** Processor GPIB bus control line; used by a controller (in conjunction with other messages) to select between two alternate sources of device programming data (remote or local control). This output is TTL compatible.
REN*	13	I	**Remote Enable:** IEEE GPIB bus control line. This input is a TTL compatible Schmitt-trigger.
$\overline{ATN}$	4	O	**Attention:** Processor GPIB bus control line; used by the 8291 to determine how data on the DIO signal lines are to be interpreted. This is a TTL compatible output.
ATN*	19	I	**Attention:** IEEE GPIB bus control line; this input is a TTL compatible Schmitt-trigger.
$\overline{IFC}$	5	O	**Interface Clear:** Processor GPIB bus control line; used by a controller to place the interface system into a known quiescent state. It is a TTL compatible output.
IFC*	12	I	**Interface Clear:** IEEE GPIB bus control line. This input is a TTL compatible Schmitt-trigger.
T/$\overline{R}$IO1 T/$\overline{R}$IO2	11 23	I I	**Transmit Receive General IO:** Direction control for the two spare transceivers. These pins are TTL compatible.
$\overline{GIO1}$ $\overline{GIO2}$	24 25	I/O I/O	**General IO:** This is the TTL side of the two spare transceivers. These pins are TTL compatible.
GIO1* GIO2*	21 22	I/O I/O	**General IO:** These are spare three-state (push-pull) drivers/Schmitt-trigger receivers. The drivers can sink 48 mA.

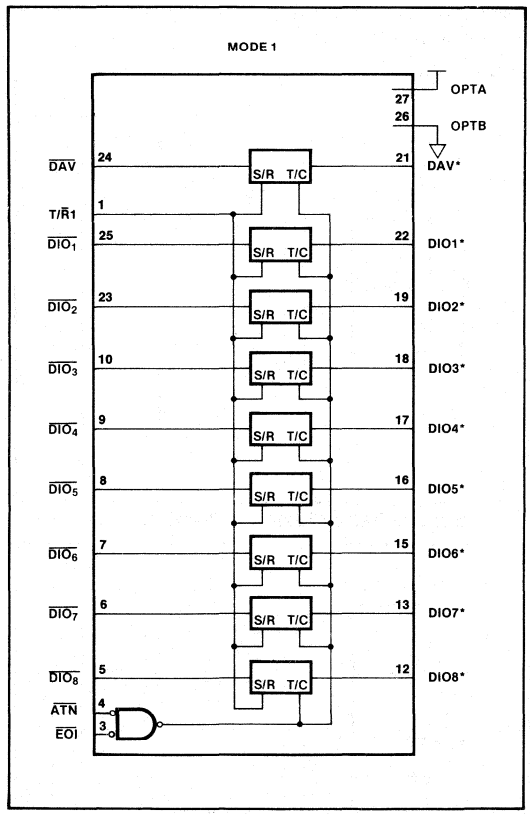

Figure 6. Talker/Listener Data Configuration

Table 4. Mode 1 Pin Description

Symbol	Pin No.	Type	Name and Function
T/$\overline{R1}$	1	I	**Transmit Receive 1:** Controls the direction for DAV and the DIO lines. If T/$\overline{R1}$ is high, then all these lines are sending information to the IEEE GPIB lines. This input is TTL compatible.
$\overline{EOI}$ $\overline{ATN}$	3 4	I I	**End Of Sequence And Attention:** Processor GPIB control lines. These two control signals are ANDed together to determine whether all the transceivers in the 8293 are three-state (push-pull) or open-collector. When both signals are low (true), then the controller is performing a parallel poll and the transceivers are all open-collector. These inputs are TTL compatible.
$\overline{DAV}$	24	I/O	**Data Valid:** Processor GPIB bus handshake control line; used to indicate the condition (availability and validity) of information on the DIO lines. It is TTL compatible.
DAV*	21	I/O	**Data Valid:** IEEE GPIB bus handshake control line. When an input, it is a TTL compatible Schmitt-trigger. When DAV* is an output, it can sink 48 mA.
$\overline{DIO1}$- $\overline{DIO8}$	25, 23, 10, 9, 8, 7, 6, 5	I/O	**Data Input/Output:** Processor GPIB bus data lines; used to carry message and data bytes in a bit-parallel byte-serial form controlled by the three handshake signals. These lines are TTL compatible.
DIO1*- DIO8*	22, 19, 18, 17, 16, 15, 13, 12	I/O	**Data Input/Output:** IEEE GPIB bus data lines. They are TTL compatible Schmitt-triggers when used for input and can sink 48 mA when used for output. See $\overline{ATN}$ and $\overline{EOI}$ description for output mode.

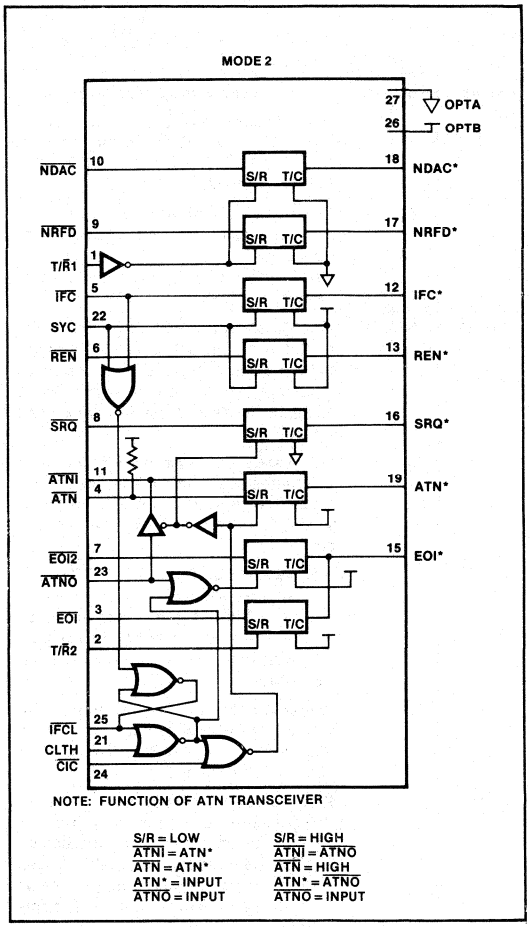

Figure 7. Talker/Listener/Controller Control Configuration

Table 5. Mode 2 Pin Description

Symbol	Pin No.	Type	Name and Function
T/$\overline{R1}$	1	I	**Transmit Receive 1:** Direction control for NDAC and NRFD. If T/$\overline{R1}$ is high, then NDAC and NRFD are receiving. Input is TTL compatible.
$\overline{NDAC}$	10	I/O	**Not Data Accepted:** Processor GPIB bus handshake control line; used to indicate the condition of acceptance of data by device(s). This pin is TTL compatible.
NDAC*	18	I/O	**Not Data Accepted:** IEEE GPIB bus handshake control line. It is a TTL compatible Schmitt-trigger when used for input and an open-collector driver with a 48 mA current sink capability when used for output.
$\overline{NRFD}$	9	I/O	**Not Ready For Data:** Processor GPIB bus handshake control line; used to indicate the condition of readiness of device(s) to accept data. This pin is TTL compatible.
NRFD*	17	I/O	**Not Ready For Data:** IEEE GPIB bus handshake control line. It is a TTL compatible Schmitt-trigger when used for input and an open-collector driver with a 48 mA current sink capability when used for output.
SYC[1]	22	I	**System Controller:** Used to monitor the system controller switch and control the direction for IFC and REN. This pin is a TTL compatible input.
$\overline{REN}$	6	I/O	**Remote Enable:** Processor GPIB control line; used by the active controller (in conjunction with other messages) to select between two alternate sources of device programming data (remote or local control). This pin is TTL compatible.
REN*	13	I/O	**Remote Enable:** IEEE GPIB bus control line. When used as an input, this is a TTL compatible Schmitt-trigger. When an output, it is a three-state driver with a 48 mA current sinking capability.
$\overline{IFC}$	5	I/O	**Interface Clear:** Processor GPIB bus control line; used by the active controller to place the interface system into a known quiescent state. This pin is TTL compatible.
IFC*	12	I/O	**Interface Clear:** IEEE GPIB control line. This is a TTL compatible Schmitt-trigger when used for input and a three-state driver capable of sinking 48 mA current when used for output.
$\overline{CIC}$	24	I	**Controller In Charge:** Used to control the direction of the SRQ and to indicate that the 8292 is in charge of the bus. $\overline{CIC}$ is a TTL compatible input.
CLTH[1]	21	I	**Clear Latch:** Used to clear the IFC Received latch after it has been recognized by the 8292. Normally low (except after a hardware reset). It will be pulsed high when IFC Received is recognized by the 8292. This input is TTL compatible.
$\overline{IFCL}$	25	O	**IFC Received Latch:** The 8292 monitors the IFC line when it is not the active controller through this pin.
$\overline{SRQ}$	8	I/O	**Service Request:** Processor GPIB control line; indicates the need for attention and requests the active controller to interrupt the current sequence of events on the GPIB bus. This pin is TTL compatible.
SRQ*	16	I/O	**Service Request:** IEEE GPIB bus control line. When used as an input, this pin is a TTL compatible Schmitt-trigger. When used as an output, it is an open-collector driver with a 48 mA current sinking capability.
T/$\overline{R2}$	2	I	**Transmit Receive 2:** Controls the direction for EOI. This input is TTL compatible.
$\overline{ATNO}$	23	I	**Attention Out:** Processor GPIB bus control line; used by the 8292 for ATN control of the IEEE bus during "take control synchronously" operations. A low on this input causes ATN to be asserted if $\overline{CIC}$ indicates that this 8292 is in charge. $\overline{ATNO}$ is a TTL compatible input.
$\overline{ATNI}$	11	O	**Attention In:** Processor GPIB bus control line; used by the 8292 to monitor the ATN line. This output is TTL compatible.
$\overline{ATN}$	4	O	**Attention:** Processor GPIB bus control line; used by the 8292 to monitor the ATN line. This output is TTL compatible.
ATN*	19	I/O	**Attention:** IEEE GPIB bus control line; used by a controller to specify how data on the DIO signal lines are to be interpreted and which devices must respond to data. When used as an output, this pin is a three-state driver capable of sinking 48 mA current. As an input, it is a TTL compatible Schmitt-trigger.
$\overline{EOI2}$	7	I/O	**End Or Identify 2:** Processor GPIB bus control line; used in conjunction with ATN by the active controller (the 8292) to execute a polling sequence. This pin is TTL compatible.
$\overline{EOI}$	3	I/O	**End Or Identify:** Processor GPIB bus control line; used by a talker to indicate the end of a multiple byte transfer sequence. This pin is TTL compatible.

NOTES:

1. V_{IL3} is guaranteed at 1.1V on these inputs to accommodate the high current-sourcing capability of these pins during a low input in Mode 2.

Table 5. Mode 2 Pin Description (Continued)

Symbol	Pin No.	Type	Name and Function
EOI*	15	I/O	**End Or Identify:** IEEE GPIB bus control line; used by a talker to indicate the end of a multiple byte transfer sequence or, by a controller in conjunction with ATN, to execute a polling sequence. When an output, this pin can sink 48 mA current. When an input, it is a TTL compatible Schmitt-trigger.

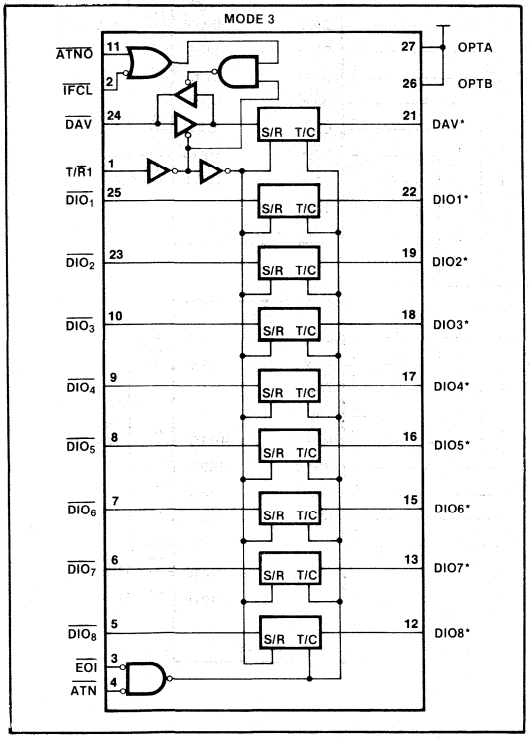

Figure 8. Talker/Listener/Controller Data Configuration

Table 6. Mode 3 Pin Description

Symbol	Pin No.	Type	Name and Function
T/$\overline{R1}$	1	I	**Transmit Receive 1:** Controls the direction for DAV and the DIO lines. If T/$\overline{R1}$ is high, then all these lines are sending information to the IEEE GPIB lines. This input is TTL compatible.
$\overline{EOI}$ $\overline{ATN}$	3 4	I I	**End Of Sequence and Attention:** Processor GPIB control lines. These two control lines are ANDed together to determine whether all the transceivers in the 8293 are push-pull or open-collector. When both signals are low (true), then the controller is performing a parallel poll and the transceivers are all open-collector. These inputs are TTL compatible.
$\overline{ATNO}$	11	I	**Attention Out:** Processor GPIB control line; used by the 8292 during "take control synchronously" operations. This pin is TTL compatible.
$\overline{IFCL}$	2	I	**Interface Clear Latched:** Used to make DAV received after the system controller asserts IFC. This input is TTL compatible.
$\overline{DAV}$	24	I/O	**Data Valid:** Processor GPIB handshake control line; used to indicate the condition (availability and validity) of information on the DIO signals. This pin is TTL compatible.
DAV*	21	I/O	**Data Valid:** IEEE GPIB handshake control line. When an input, this pin is a TTL compatible Schmitt-trigger. When DAV* is an output, it can sink 48 mA.
$\overline{DIO1}$- $\overline{DIO8}$	25, 23, 10, 9, 8, 7, 6, 5	I/O	**Data Input/Output:** Processor GPIB bus data lines; used to carry message and data bytes in a bit-parallel byte-serial from controlled by the three handshake signals. These lines are TTL compatible.
DIO1* DIO8*	22, 19, 18, 17, 16, 15, 13, 12	I/O	**Data Input/Output:** IEEE GPIB bus data lines. They are TTL compatible Schmitt-triggers when used for input and can sink 48 mA when used for output.

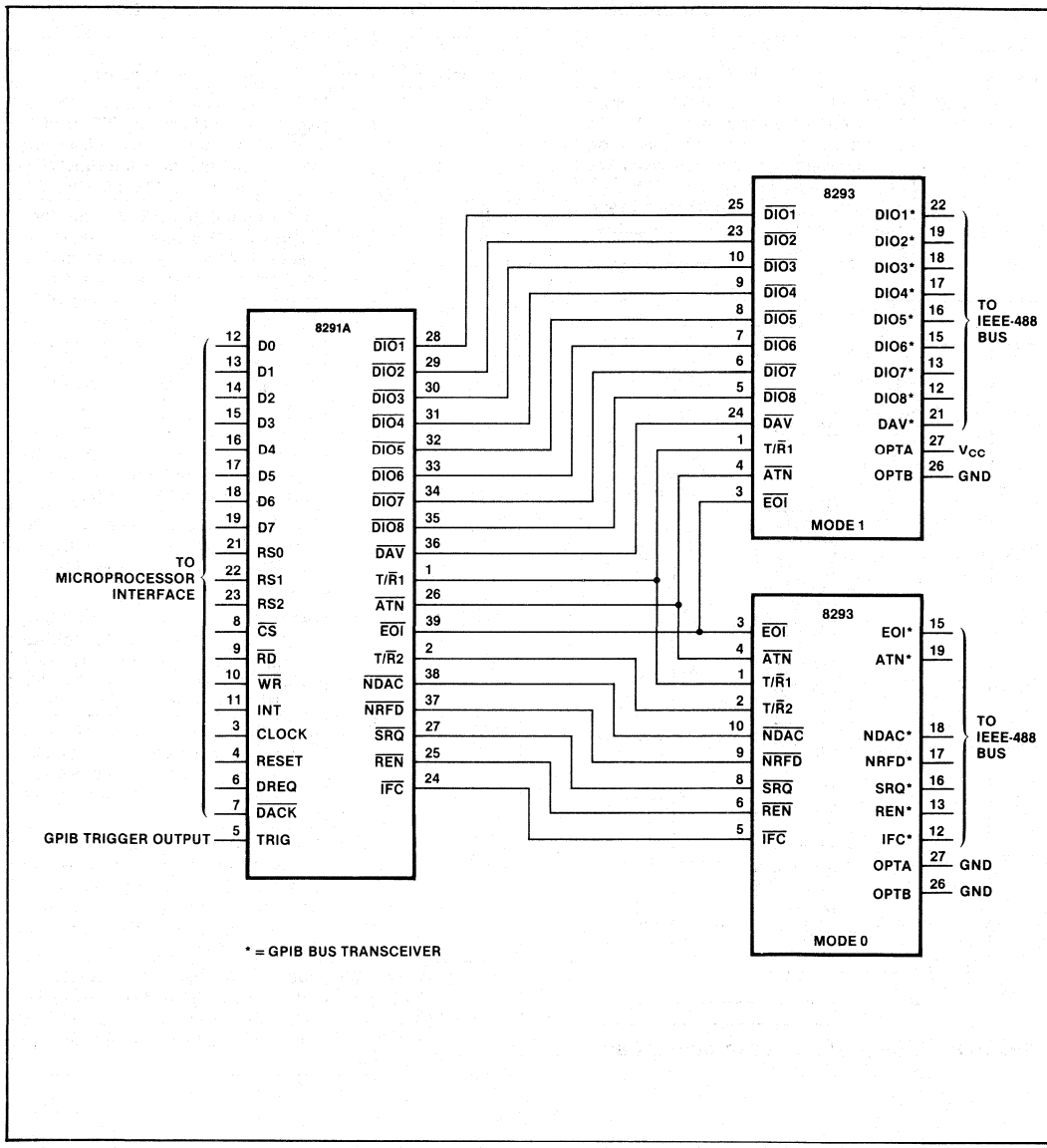

Figure 9. 8291A and 8293 System Configuration

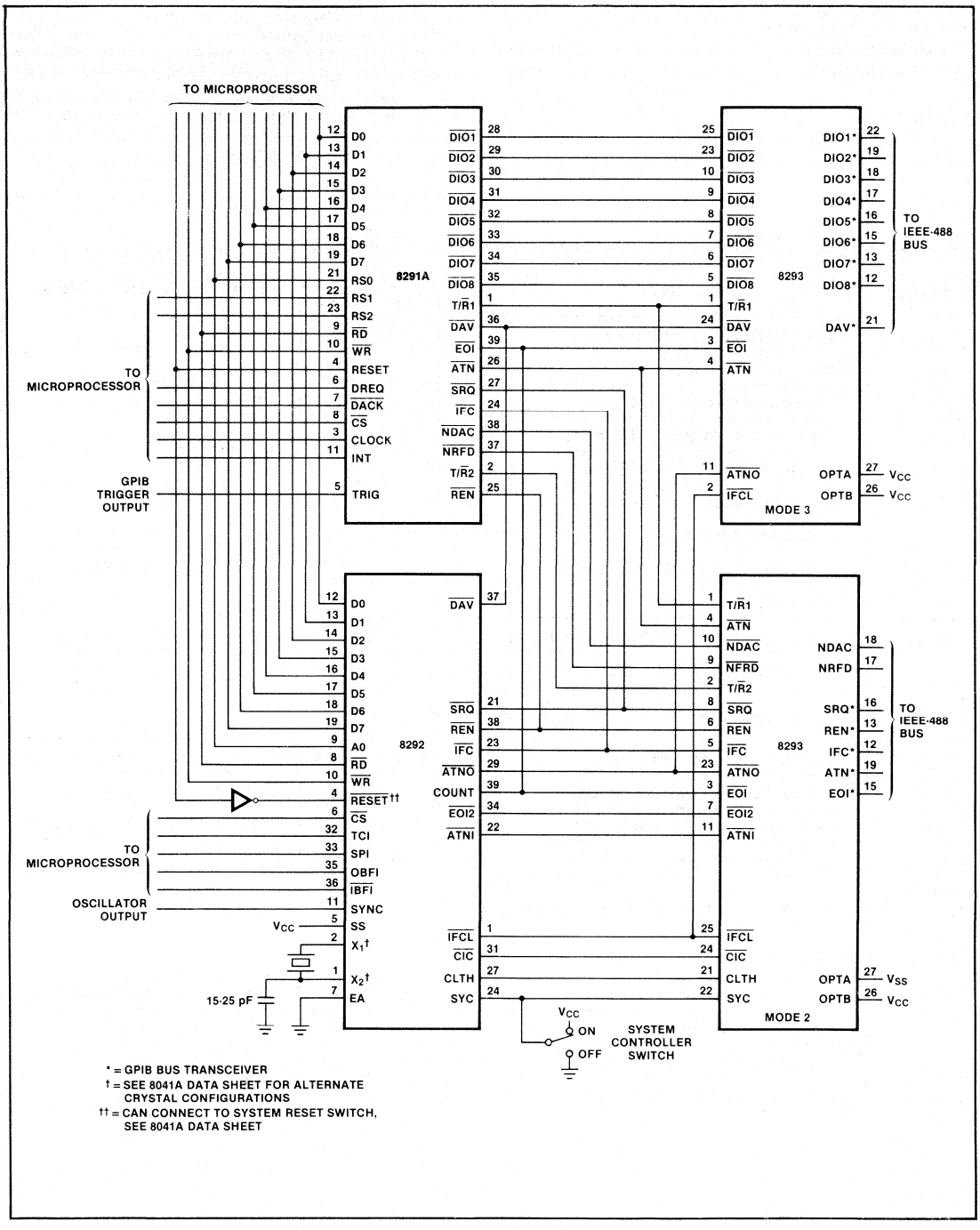

Figure 10. 8291A, 8292, and 8293 System Configuration

ABSOLUTE MAXIMUM RATINGS*

Ambient Temperature Under Bias . . . . . 0°C to 70°C
Storage Temperature . . . . . −65°C to +150°C
Voltage on any Pin with
Respect to Ground . . . . . −1.0V to +7V
Power Dissipation . . . . . 1 Watt

*NOTICE:
1. Stresses above those listed under "Absolute Maximum Ratings" may cause permanent damage to the device. This is a stress rating only and functional operation of the device at these or any other conditions above those indicated in the operational sections of this specification is not implied. Exposure to absolute maximum rating conditions for extended periods may affect device reliability.
2. All devices are guaranteed to operate within the minimum and maximum parameter limits specified below. Typical parameters however are not tested and are not guaranteed. Established statistically, they indicate the performance level expected in a typical device at room temperature (T_A = 25°C) and V_{CC} = 5V.

D.C. CHARACTERISTICS (T_A = 0°C to 70°C, V_{CC} = 5.0V ±10%, GND = 0V)

Symbol	Parameter	Limits			Units	Test Conditions
		Min.	Typ.	Max.		
V_{IL1}	Input Low Voltage (GPIB Bus Pins)			0.8	V	
V_{IL2}	Input Low Voltage (Option Pins)	−0.1		0.1	V	
V_{IL3}[1]	Input Low Voltage (All Others)			0.8	V	
V_{IH1}	Input High Voltage (GPIB Bus Pins)	2.0		V_{CC}	V	
V_{IH2}	Input High Voltage (Option Pins)	4.5		V_{CC}	V	
V_{IH3}	Input High voltage (All Others)	2.0		V_{CC}	V	
V_{IH4}	Receiver Input Hysteresis	400			mV	
V_{OL1}	Output Low Voltage (GPIB Bus Pins)			0.5	V	I_{OL} = 48 mA
V_{OL2}	Output Low Voltage (All Others)			0.5	V	I_{OL} = 16 mA
V_{OH1}	Output High Voltage (GPIB Bus Pins)	2.4			V	I_{OH} = −5.2 mA
V_{OH2}	Output High Voltage (All Others)	2.4			V	I_{OH} = −800 μA
V_{IT}	Receiver Input Threshold High to Low	0.8			V	
	Receiver Input Threshold Low to High			2.0		
I_{LC}	Input Load Current (GPIB Pins)	See Bus Load Line Diagram				V_{CC} = 5.0V ± 5%
I_{IL}	Input Leakage Current (All Others)			10	μA	$0.45 \leq V_{IN} \leq V_{CC}$
I_{PD}	Bus Power Down Leakage Current			40	μA	$0.45V \leq V_{BUS} \leq 2.7V$
I_{CC}	Power Supply Current		110	175	mA	

NOTES:
1. V_{IL3} = 1.1V max on pins 21 and 22 in Mode 2 for the 8293-10.

CAPACITANCE

Symbol	Parameter	Min.	Typ.	Max.	Units	Test Conditions
C_{IO1}	I/O Capacitance (GPIB Side)		50	80	pF	$V_{IN} = V_{CC}$
C_{IO2}	I/O Capacitance (System Side)		35	50	pF	$V_{IN} = V_{CC}$
C_{ITR}	Input Capacitance (T/R1, T/R2)		7	10	pF	$V_{IN} = V_{CC}$

A.C. CHARACTERISTICS (T_A = 0°C to 70°C, V_{CC} = 5.0V ±10%, GND = 0V)

Symbol	Parameter	Max.	Units
t_{P1}	Transmitter Propagation Delay (All Lines)	30	ns
t_{P2}	Receiver Propagation Delay (EOI, ATN and Handshake Lines)	50	ns
t_{P3}	Receiver Propagation Delay (All Other Lines)	60	ns
t_{PHZ1}	Transmitter Disable Delay (High to 3-State)	40	ns
t_{PZH1}	Transmitter Enable Delay (3-state to High)	40	ns
t_{PLZ1}	Transmitter Disable Delay (Low to 3-State)	40	ns
t_{PZL1}	Transmitter Enable Delay (3-State to Low)	40	ns
t_{PHZ2}	Receiver Disable Delay (High to 3-State)	40	ns
t_{PZH2}	Receiver Enable Delay (3-State to High)	40	ns
t_{PLZ2}	Receiver Disable Delay (Low to 3-State)	40	ns
t_{PZL2}	Receiver Enable Delay (3-State to Low)	40	ns
t_{MS}	Mode Switch Delay	10	μs

TYPICAL OUTPUT LOADING CIRCUITS

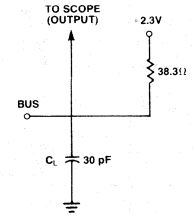

C_L INCLUDES JIG AND PROBE CAPACITANCE

Data Input to Bus Output (Driver)

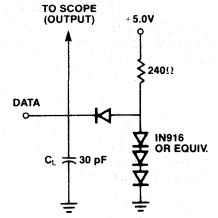

C_L INCLUDES JIG AND PROBE CAPACITANCE

Bus Input to Data Output (Receiver)

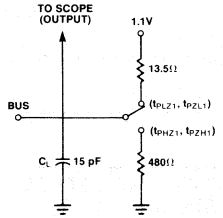

C_L INCLUDES JIG AND PROBE CAPACITANCE

Send/Receive Input to Bus Output (Driver)

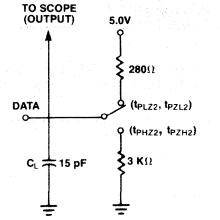

C_L INCLUDES JIG AND PROBE CAPACITANCE

Send/Receive Input to Data Output (Receiver)

A.C. TESTING INPUT, OUTPUT WAVEFORM

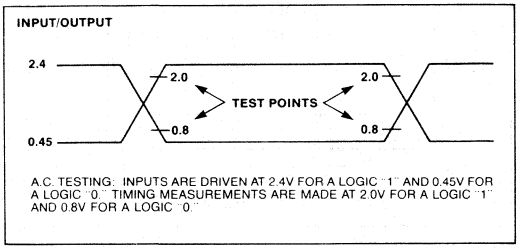

WAVEFORMS

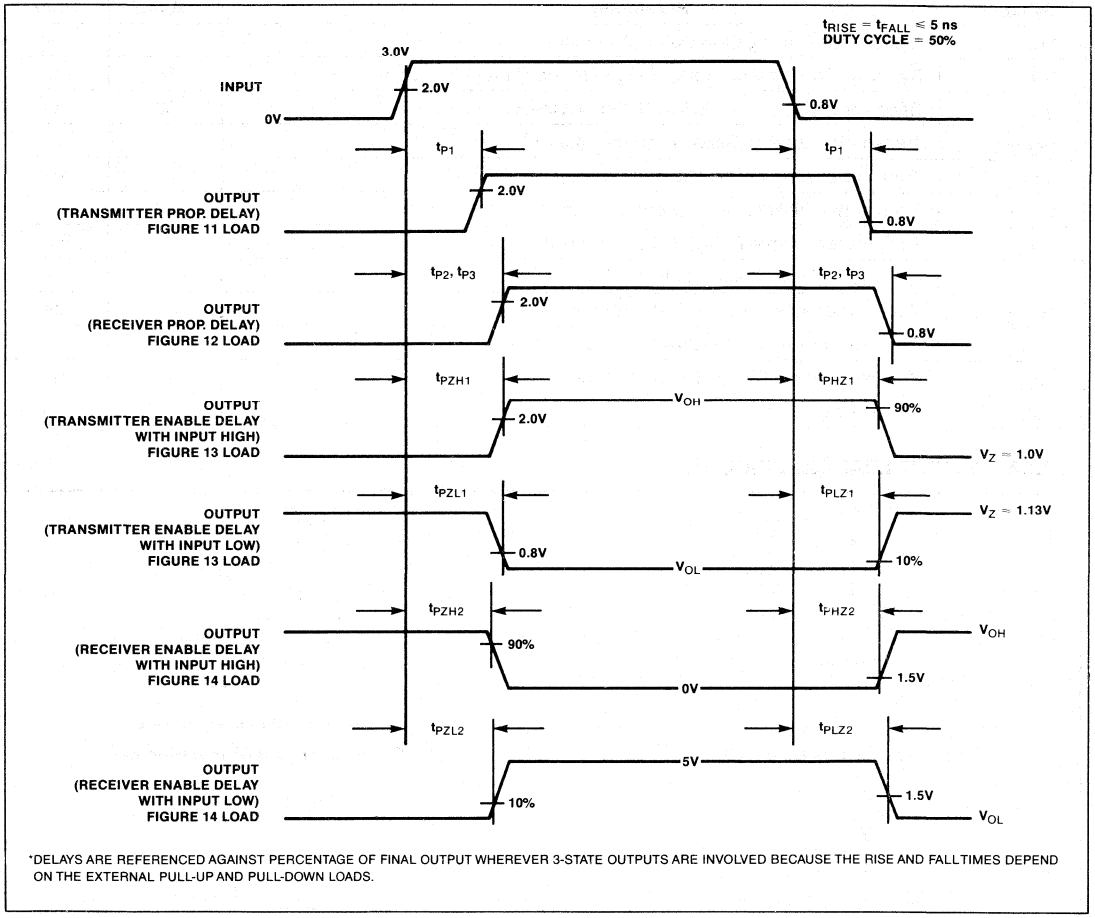

*DELAYS ARE REFERENCED AGAINST PERCENTAGE OF FINAL OUTPUT WHEREVER 3-STATE OUTPUTS ARE INVOLVED BECAUSE THE RISE AND FALLTIMES DEPEND ON THE EXTERNAL PULL-UP AND PULL-DOWN LOADS.

BUS LOAD LINE

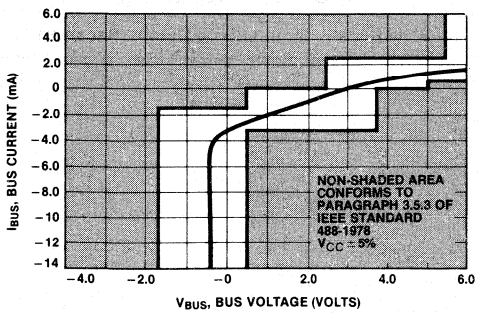

TYPICAL RECEIVER HYSTERESIS CHARACTERISTICS

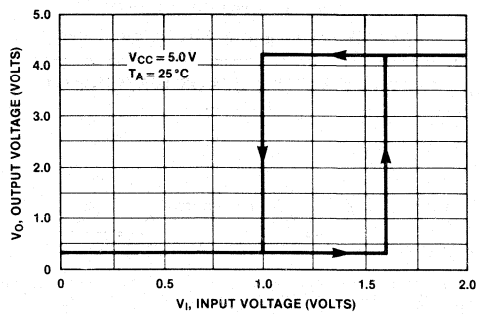

AFN-00825C

8253/8253-5
PROGRAMMABLE INTERVAL TIMER

- MCS-85™ Compatible 8253-5
- 3 Independent 16-Bit Counters
- DC to 2 MHz
- Programmable Counter Modes
- Count Binary or BCD
- Single +5V Supply
- 24-Pin Dual In-Line Package

The Intel® 8253 is a programmable counter/timer chip designed for use as an Intel microcomputer peripheral. It uses nMOS technology with a single +5V supply and is packaged in a 24-pin plastic DIP.

It is organized as 3 independent 16-bit counters, each with a count rate of up to 2 MHz. All modes of operation are software programmable.

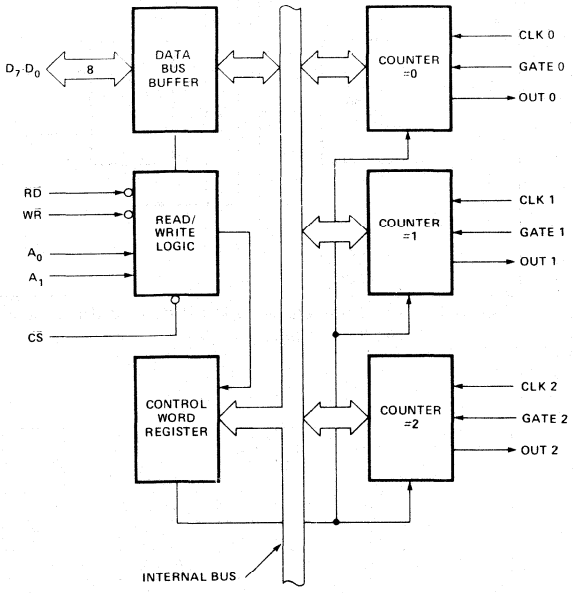

Figure 1. Block Diagram

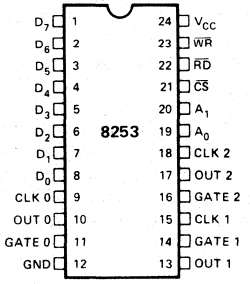

Figure 2. Pin Configuration

FUNCTIONAL DESCRIPTION

General

The 8253 is a programmable interval timer/counter specifically designed for use with the Intel™ Microcomputer systems. Its function is that of a general purpose, multi-timing element that can be treated as an array of I/O ports in the system software.

The 8253 solves one of the most common problems in any microcomputer system, the generation of accurate time delays under software control. Instead of setting up timing loops in systems software, the programmer configures the 8253 to match his requirements, initializes one of the counters of the 8253 with the desired quantity, then upon command the 8253 will count out the delay and interrupt the CPU when it has completed its tasks. It is easy to see that the software overhead is minimal and that multiple delays can easily be maintained by assignment of priority levels.

Other counter/timer functions that are non-delay in nature but also common to most microcomputers can be implemented with the 8253.

- Programmable Rate Generator
- Event Counter
- Binary Rate Multiplier
- Real Time Clock
- Digital One-Shot
- Complex Motor Controller

Data Bus Buffer

This 3-state, bi-directional, 8-bit buffer is used to interface the 8253 to the system data bus. Data is transmitted or received by the buffer upon execution of INput or OUTput CPU instructions. The Data Bus Buffer has three basic functions.

1. Programming the MODES of the 8253.
2. Loading the count registers.
3. Reading the count values.

Read/Write Logic

The Read/Write Logic accepts inputs from the system bus and in turn generates control signals for overall device operation. It is enabled or disabled by CS so that no operation can occur to change the function unless the device has been selected by the system logic.

$\overline{RD}$ (Read)

A "low" on this input informs the 8253 that the CPU is inputting data in the form of a counters value.

$\overline{WR}$ (Write)

A "low" on this input informs the 8253 that the CPU is outputting data in the form of mode information or loading counters.

A0, A1

These inputs are normally connected to the address bus. Their function is to select one of the three counters to be operated on and to address the control word register for mode selection.

$\overline{CS}$ (Chip Select)

A "low" on this input enables the 8253. No reading or writing will occur unless the device is selected. The $\overline{CS}$ input has no effect upon the actual operation of the counters.

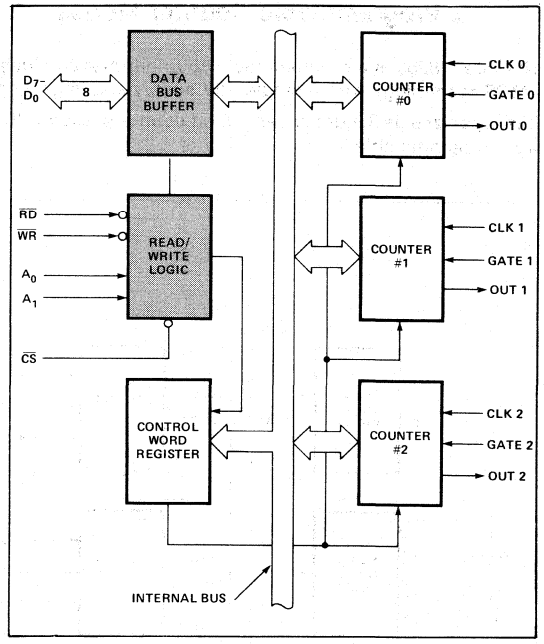

Figure 3. Block Diagram Showing Data Bus Buffer and Read/Write Logic Functions

$\overline{CS}$	$\overline{RD}$	$\overline{WR}$	A_1	A_0	
0	1	0	0	0	Load Counter No. 0
0	1	0	0	1	Load Counter No. 1
0	1	0	1	0	Load Counter No. 2
0	1	0	1	1	Write Mode Word
0	0	1	0	0	Read Counter No. 0
0	0	1	0	1	Read Counter No. 1
0	0	1	1	0	Read Counter No. 2
0	0	1	1	1	No-Operation 3-State
1	X	X	X	X	Disable 3-State
0	1	1	X	X	No-Operation 3-State

Control Word Register

The Control Word Register is selected when A0, A1 are 11. It then accepts information from the data bus buffer and stores it in a register. The information stored in this register controls the operational MODE of each counter, selection of binary or BCD counting and the loading of each count register.

The Control Word Register can only be written into; no read operation of its contents is available.

Counter #0, Counter #1, Counter #2

These three functional blocks are identical in operation so only a single Counter will be described. Each Counter consists of a single, 16-bit, pre-settable, DOWN counter. The counter can operate in either binary or BCD and its input, gate and output are configured by the selection of MODES stored in the Control Word Register.

The counters are fully independent and each can have separate Mode configuration and counting operation, binary or BCD. Also, there are special features in the control word that handle the loading of the count value so that software overhead can be minimized for these functions.

The reading of the contents of each counter is available to the programmer with simple READ operations for event counting applications and special commands and logic are included in the 8253 so that the contents of each counter can be read "on the fly" without having to inhibit the clock input.

8253 SYSTEM INTERFACE

The 8253 is a component of the Intel™ Microcomputer Systems and interfaces in the same manner as all other peripherals of the family. It is treated by the systems software as an array of peripheral I/O ports; three are counters and the fourth is a control register for MODE programming.

Basically, the select inputs A0, A1 connect to the A0, A1 address bus signals of the CPU. The $\overline{CS}$ can be derived directly from the address bus using a linear select method. Or it can be connected to the output of a decoder, such as an Intel® 8205 for larger systems.

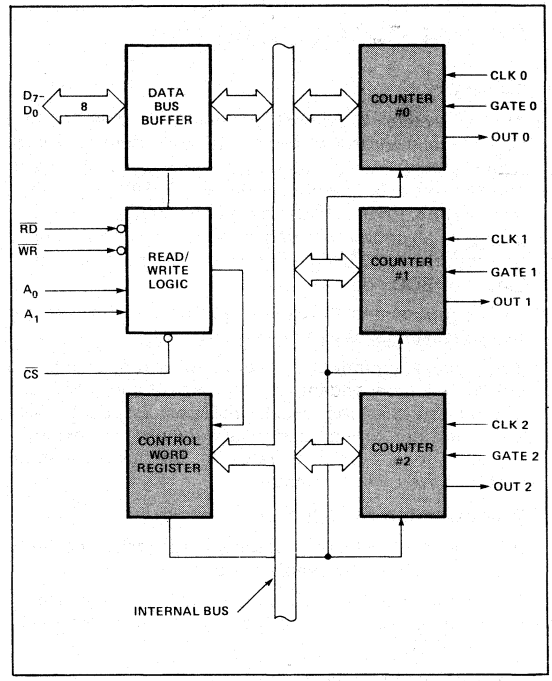

Figure 4. Block Diagram Showing Control Word Register and Counter Functions

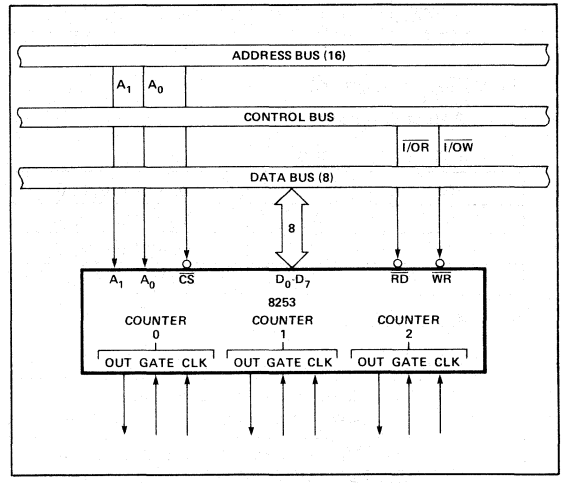

Figure 5. 8253 System Interface

OPERATIONAL DESCRIPTION

General

The complete functional definition of the 8253 is programmed by the systems software. A set of control words must be sent out by the CPU to initialize each counter of the 8253 with the desired MODE and quantity information. Prior to initialization, the MODE, count, and output of all counters is undefined. These control words program the MODE, Loading sequence and selection of binary or BCD counting.

Once programmed, the 8253 is ready to perform whatever timing tasks it is assigned to accomplish.

The actual counting operation of each counter is completely independent and additional logic is provided on-chip so that the usual problems associated with efficient monitoring and management of external, asynchronous events or rates to the microcomputer system have been eliminated.

Programming the 8253

All of the MODES for each counter are programmed by the systems software by simple I/O operations.

Each counter of the 8253 is individually programmed by writing a control word into the Control Word Register. (A0, A1 = 11)

Control Word Format

D_7	D_6	D_5	D_4	D_3	D_2	D_1	D_0
SC1	SC0	RL1	RL0	M2	M1	M0	BCD

Definition of Control

SC — Select Counter:

SC1	SC0	
0	0	Select Counter 0
0	1	Select Counter 1
1	0	Select Counter 2
1	1	Illegal

RL — Read/Load:

RL1	RL0	
0	0	Counter Latching operation (see READ/WRITE Procedure Section)
1	0	Read/Load most significant byte only.
0	1	Read/Load least significant byte only.
1	1	Read/Load least significant byte first, then most significant byte.

M — MODE:

M2	M1	M0	
0	0	0	Mode 0
0	0	1	Mode 1
X	1	0	Mode 2
X	1	1	Mode 3
1	0	0	Mode 4
1	0	1	Mode 5

BCD:

0	Binary Counter 16-bits
1	Binary Coded Decimal (BCD) Counter (4 Decades)

Counter Loading

The count register is not loaded until the count value is written (one or two bytes, depending on the mode selected by the RL bits), followed by a rising edge and a falling edge of the clock. Any read of the counter prior to that falling clock edge may yield invalid data.

MODE Definition

MODE 0: Interrupt on Terminal Count. The output will be initially low after the mode set operation. After the count is loaded into the selected count register, the output will remain low and the counter will count. When terminal count is reached the output will go high and remain high until the selected count register is reloaded with the mode or a new count is loaded. The counter continues to decrement after terminal count has been reached.

Rewriting a counter register during counting results in the following:

(1) Write 1st byte stops the current counting.
(2) Write 2nd byte starts the new count.

MODE 1: Programmable One-Shot. The output will go low on the count following the rising edge of the gate input.

The output will go high on the terminal count. If a new count value is loaded while the output is low it will not affect the duration of the one-shot pulse until the succeeding trigger. The current count can be read at any time without affecting the one-shot pulse.

The one-shot is retriggerable, hence the output will remain low for the full count after any rising edge of the gate input.

MODE 2: Rate Generator. Divide by N counter. The output will be low for one period of the input clock. The period from one output pulse to the next equals the number of input counts in the count register. If the count register is reloaded between output pulses the present period will not be affected, but the subsequent period will reflect the new value.

The gate input, when low, will force the output high. When the gate input goes high, the counter will start from the initial count. Thus, the gate input can be used to synchronize the counter.

When this mode is set, the output will remain high until after the count register is loaded. The output then can also be synchronized by software.

MODE 3: Square Wave Rate Generator. Similar to MODE 2 except that the output will remain high until one half the count has been completed (for even numbers) and go low for the other half of the count. This is accomplished by decrementing the counter by two on the falling edge of each clock pulse. When the counter reaches terminal count, the state of the output is changed and the counter is reloaded with the full count and the whole process is repeated.

If the count is odd and the output is high, the first clock pulse (after the count is loaded) decrements the count by 1. Subsequent clock pulses decrement the clock by 2. After timeout, the output goes low and the full count is reloaded. The first clock pulse (following the reload) decrements the counter by 3. Subsequent clock pulses decrement the count by 2 until timeout. Then the whole process is repeated. In this way, if the count is odd, the output will be high for $(N+1)/2$ counts and low for $(N-1)/2$ counts.

MODE 4: Software Triggered Strobe. After the mode is set, the output will be high. When the count is loaded, the counter will begin counting. On terminal count, the output will go low for one input clock period, then will go high again.

If the count register is reloaded between output pulses, the present period will not be affected, but the subsequent period will reflect the new value. The count will be inhibited while the gate input is low. Reloading the counter register will restart counting beginning with the new number.

MODE 5: Hardware Triggered Strobe. The counter will start counting after the rising edge of the trigger input and will go low for one clock period when the terminal count is reached. The counter is retriggerable. The output will not go low until the full count after the rising edge of any trigger.

Modes \ Signal Status	Low Or Going Low	Rising	High
0	Disables counting	—	Enables counting
1	—	1) Initiates counting 2) Resets output after next clock	—
2	1) Disables counting 2) Sets output immediately high	**1) Reloads counter** **2) Initiates counting**	Enables counting
3	1) Disables counting 2) Sets output immediately high	Initiates counting	Enables counting
4	Disables counting	—	Enables counting
5	—	Initiates counting	—

Figure 6. Gate Pin Operations Summary

MODE 0: Interrupt on Terminal Count

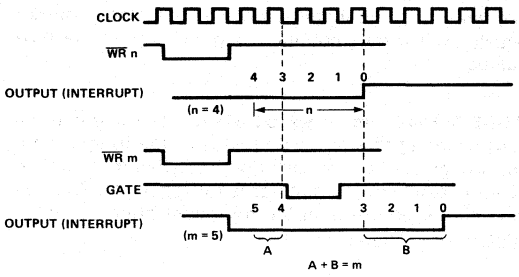

MODE 1: Programmable One-Shot

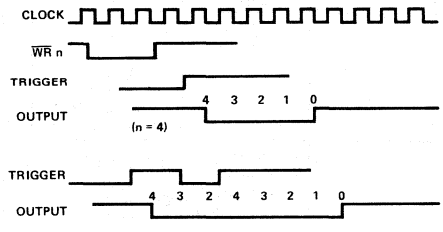

MODE 2: Rate Generator

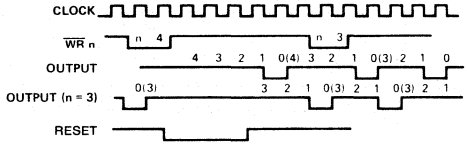

MODE 3: Square Wave Generator

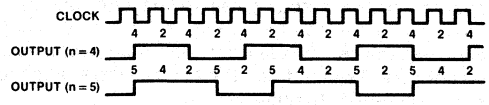

MODE 4: Software Triggered Strobe

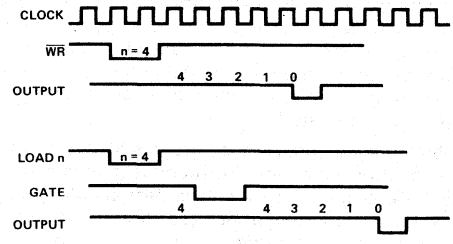

MODE 5: Hardware Triggered Strobe

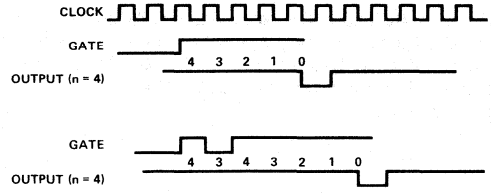

Figure 7. 8253 Timing Diagrams

8253 READ/WRITE PROCEDURE

Write Operations

The systems software must program each counter of the 8253 with the mode and quantity desired. The programmer must write out to the 8253 a MODE control word and the programmed number of count register bytes (1 or 2) prior to actually using the selected counter.

The actual order of the programming is quite flexible. Writing out of the MODE control word can be in any sequence of counter selection, e.g., counter #0 does not have to be first or counter #2 last. Each counter's MODE control word register has a separate address so that its loading is completely sequence independent. (SC0, SC1)

The loading of the Count Register with the actual count value, however, must be done in exactly the sequence programmed in the MODE control word (RL0, RL1). This loading of the counter's count register is still sequence independent like the MODE control word loading, but when a selected count register is to be loaded it must be loaded with the number of bytes programmed in the MODE control word (RL0, RL1). The one or two bytes to be loaded in the count register do not have to follow the associated MODE control word. They can be programmed at any time following the MODE control word loading as long as the correct number of bytes is loaded in order.

All counters are down counters. Thus, the value loaded into the count register will actually be decremented. Loading all zeroes into a count register will result in the maximum count (2^{16} for Binary or 10^4 for BCD). In MODE 0 the new count will not restart until the load has been completed. It will accept one of two bytes depending on how the MODE control words (RL0, RL1) are programmed. Then proceed with the restart operation.

	MODE Control Word Counter n
LSB	Count Register byte Counter n
MSB	Count Register byte Counter n

Note: Format shown is a simple example of loading the 8253 and does not imply that it is the only format that can be used.

Figure 8. Programming Format

			A1	A0
No. 1		MODE Control Word Counter 0	1	1
No. 2		MODE Control Word Counter 1	1	1
No. 3		MODE Control Word Counter 2	1	1
No. 4	LSB	Count Register Byte Counter 1	0	1
No. 5	MSB	Count Register Byte Counter 1	0	1
No. 6	LSB	Count Register Byte Counter 2	1	0
No. 7	MSB	Count Register Byte Counter 2	1	0
No. 8	LSB	Count Register Byte Counter 0	0	0
No. 9	MSB	Count Register Byte Counter 0	0	0

Note: The exclusive addresses of each counter's count register make the task of programming the 8253 a very simple matter, and maximum effective use of the device will result if this feature is fully utilized.

Figure 9. Alternate Programming Formats

Read Operations

In most counter applications it becomes necessary to read the value of the count in progress and make a computational decision based on this quantity. Event counters are probably the most common application that uses this function. The 8253 contains logic that will allow the programmer to easily read the contents of any of the three counters without disturbing the actual count in progress.

There are two methods that the programmer can use to read the value of the counters. The first method involves the use of simple I/O read operations of the selected counter. By controlling the A0, A1 inputs to the 8253 the programmer can select the counter to be read (remember that no read operation of the mode register is allowed A0, A1-11). The only requirement with this method is that in order to assure a stable count reading the actual operation of the selected counter must be inhibited either by controlling the Gate input or by external logic that inhibits the clock input. The contents of the counter selected will be available as follows:

first I/O Read contains the least significant byte (LSB).

second I/O Read contains the most significant byte (MSB).

Due to the internal logic of the 8253 it is absolutely necessary to complete the entire reading procedure. If two bytes are programmed to be read then two bytes must be read before any loading WR command can be sent to the same counter.

Read Operation Chart

A1	A0	RD	
0	0	0	Read Counter No. 0
0	1	0	Read Counter No. 1
1	0	0	Read Counter No. 2
1	1	0	Illegal

Reading While Counting

In order for the programmer to read the contents of any counter without effecting or disturbing the counting operation the 8253 has special internal logic that can be accessed using simple WR commands to the MODE register. Basically, when the programmer wishes to read the contents of a selected counter "on the fly" he loads the MODE register with a special code which latches the present count value into a storage register so that its contents contain an accurate, stable quantity. The programmer then issues a normal read command to the selected counter and the contents of the latched register is available.

MODE Register for Latching Count

A0, A1 = 11

D7	D6	D5	D4	D3	D2	D1	D0
SC1	SC0	0	0	X	X	X	X

SC1,SC0 — specify counter to be latched.

D5,D4 — 00 designates counter latching operation.

X — don't care.

The same limitation applies to this mode of reading the counter as the previous method. That is, it is mandatory to complete the entire read operation as programmed. This command has no effect on the counter's mode.

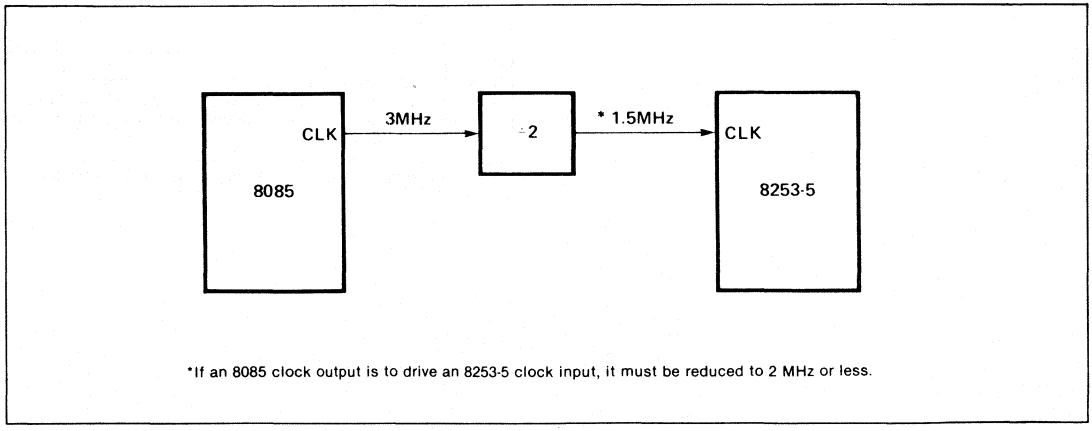

Figure 10. MCS-85™ Clock Interface*

ABSOLUTE MAXIMUM RATINGS*

Ambient Temperature Under Bias ..... 0°C to 70°C
Storage Temperature ..... −65°C to +150°C
Voltage On Any Pin
With Respect to Ground ..... −0.5 V to +7 V
Power Dissipation ..... 1 Watt

NOTICE: Stresses above those listed under "Absolute Maximum Ratings" may cause permanent damage to the device. This is a stress rating only and functional operation of the device at these or any other conditions above those indicated in the operational sections of this specification is not implied. Exposure to absolute maximum rating conditions for extended periods may affect device reliability.

D.C. CHARACTERISTICS (T_A = 0°C to 70°C, V_{CC} = 5V ±10%)

Symbol	Parameter	Min.	Max.	Unit	Test Conditions
V_{IL}	Input Low Voltage	-0.5	0.8	V	
V_{IH}	Input High Voltage	2.2	V_{CC}+.5V	V	
V_{OL}	Output Low Voltage		0.45	V	Note 1
V_{OH}	Output High Voltage	2.4		V	Note 2
I_{IL}	Input Load Current		±10	μA	V_{IN} = V_{CC} to 0V
I_{OFL}	Output Float Leakage		±10	μA	V_{OUT} = V_{CC} to .45V
I_{CC}	V_{CC} Supply Current		140	mA	

CAPACITANCE (T_A = 25°C, V_{CC} = GND = 0V)

Symbol	Parameter	Min.	Typ.	Max.	Unit	Test Conditions
C_{IN}	Input Capacitance			10	pF	fc = 1 MHz
$C_{I/O}$	I/O Capacitance			20	pF	Unmeasured pins returned to V_{SS}

A.C. CHARACTERISTICS (T_A = 0°C to 70°C, V_{CC} = 5.0V ±5%, GND = 0V)

Bus Parameters (Note 3)

READ CYCLE

Symbol	Parameter	8253		8253-5		Unit
		Min.	Max.	Min.	Max.	
t_{AR}	Address Stable Before $\overline{READ}$	50		30		ns
t_{RA}	Address Hold Time for $\overline{READ}$	5		5		ns
t_{RR}	$\overline{READ}$ Pulse Width	400		300		ns
t_{RD}	Data Delay From $\overline{READ}$[4]		300		200	ns
t_{DF}	$\overline{READ}$ to Data Floating	25	125	25	100	ns
t_{RV}	Recovery Time Between READ and Any Other Control Signal	1		1		μs

A.C. CHARACTERISTICS (Continued)

WRITE CYCLE

Symbol	Parameter	8253		8253-5		Unit
		Min.	Max.	Min.	Max.	
t_{AW}	Address Stable Before $\overline{WRITE}$	50		30		ns
t_{WA}	Address Hold Time for $\overline{WRITE}$	30		30		ns
t_{WW}	$\overline{WRITE}$ Pulse Width	400		300		ns
t_{DW}	Data Set Up Time for $\overline{WRITE}$	300		250		ns
t_{WD}	Data Hold Time for $\overline{WRITE}$	40		30		ns
t_{RV}	Recovery Time Between $\overline{WRITE}$ and Any Other Control Signal	1		1		μs

CLOCK AND GATE TIMING

Symbol	Parameter	8253		8253-5		Unit
		Min.	Max.	Min.	Max.	
t_{CLK}	Clock Period	380	dc	380	dc	ns
t_{PWH}	High Pulse Width	230		230		ns
t_{PWL}	Low Pulse Width	150		150		ns
t_{GW}	Gate Width High	150		150		ns
t_{GL}	Gate Width Low	100		100		ns
t_{GS}	Gate Set Up Time to CLK↑	100		100		ns
t_{GH}	Gate Hold Time After CLK↑	50		50		ns
t_{OD}	Output Delay From CLK↓[4]		400		400	ns
t_{ODG}	Output Delay From Gate↓[4]		300		300	ns

NOTES:
1. I_{OL} = 2.2 mA.
2. I_{OH} = −400 μA.
3. AC timings measured at V_{OH} 2.2, V_{OL} = 0.8.
4. C_L = 150pF.

A.C. TESTING INPUT, OUTPUT WAVEFORM

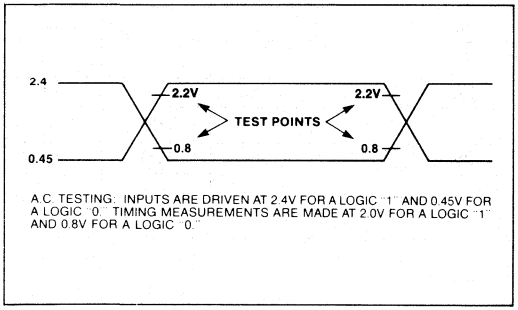

A.C. TESTING LOAD CIRCUIT

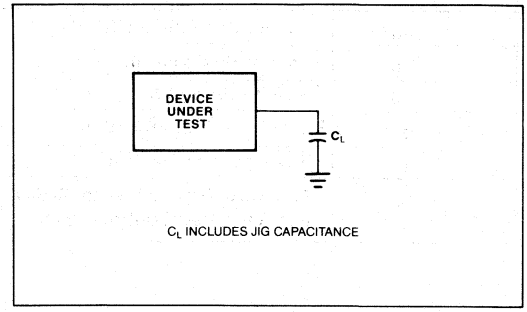

WAVEFORMS

WRITE TIMING

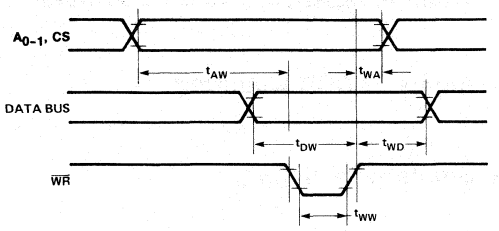

READ TIMING

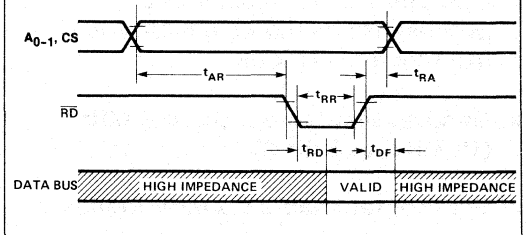

CLOCK AND GATE TIMING

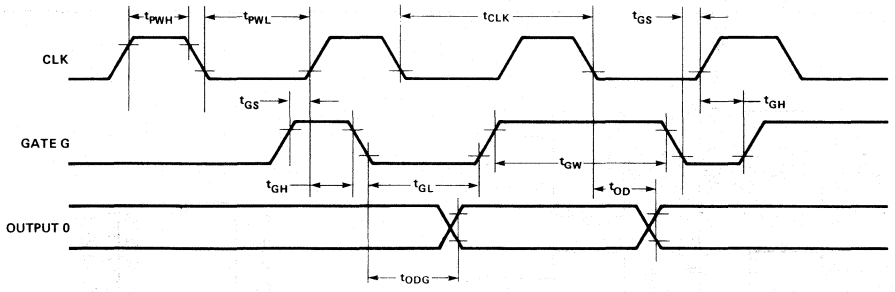

8254
PROGRAMMABLE INTERVAL TIMER

- **Compatible with Most Microprocessors Including 8080A, 8085A, iAPX 88 and iAPX 86**
- **Handles Inputs from DC to 8 MHz (10 MHz for 8254-2)**
- **Six Programmable Counter Modes**
- **Status Read-Back Command**
- **Three Independent 16-bit Counters**
- **Binary or BCD Counting**
- **Single +5V Supply**
- **Uses HMOS Technology**

The Intel® 8254 is a counter/timer device designed to solve the common timing control problems in microcomputer system design. It provides three independent 16-bit counters, each capable of handling clock inputs up to 10 MHz. All modes are software programmable. The 8254 is a superset of the 8253.

The 8254 uses HMOS technology and comes in a 24-pin plastic or CERDIP package.

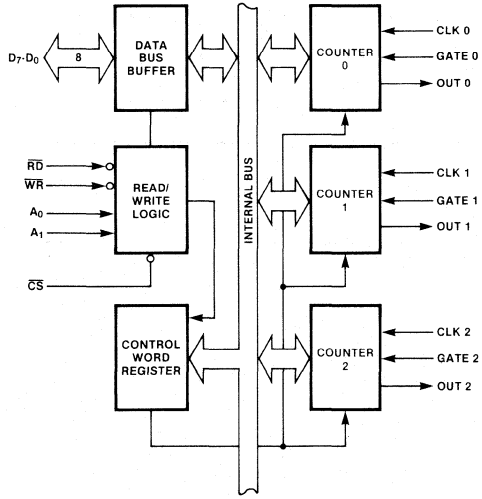

Figure 1. 8254 Block Diagram

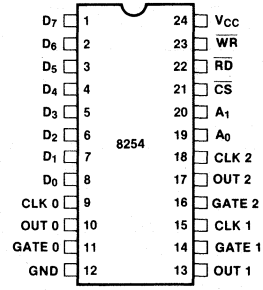

Figure 2. Pin Configuration

Table 1. Pin Description

Symbol	Pin No.	Type	Name and Function
D_7-D_0	1-8	I/O	**Data:** Bi-directional three state data bus lines, connected to system data bus.
CLK 0	9	I	**Clock 0:** Clock input of Counter 0.
OUT 0	10	O	**Output 0:** Output of Counter 0.
GATE 0	11	I	**Gate 0:** Gate input of Counter 0.
GND	12		**Ground:** Power supply connection.
V_{CC}	24		**Power:** +5V power supply connection.
$\overline{WR}$	23	I	**Write Control:** This input is low during CPU write operations.
$\overline{RD}$	22	I	**Read Control:** This input is low during CPU read operations.
$\overline{CS}$	21	I	**Chip Select:** A low on this input enables the 8254 to respond to $\overline{RD}$ and $\overline{WR}$ signals. $\overline{RD}$ and $\overline{WR}$ are ignored otherwise.
A_1, A_0	20-19	I	**Address:** Used to select one of the three Counters or the Control Word Register for read or write operations. Normally connected to the system address bus.
			A_1 / A_0 / Selects: 0 0 Counter 0; 0 1 Counter 1; 1 0 Counter 2; 1 1 Control Word Register
CLK 2	18	I	**Clock 2:** Clock input of Counter 2.
OUT 2	17	O	**Out 2:** Output of Counter 2.
GATE 2	16	I	**Gate 2:** Gate input of Counter 2.
CLK 1	15	I	**Clock 1:** Clock input of Counter 1.
GATE 1	14	I	**Gate 1:** Gate input of Counter 1.
OUT 1	13	O	**Out 1:** Output of Counter 1.

FUNCTIONAL DESCRIPTION

General

The 8254 is a programmable interval timer/counter designed for use with Intel microcomputer systems. It is a general purpose, multi-timing element that can be treated as an array of I/O ports in the system software.

The 8254 solves one of the most common problems in any microcomputer system, the generation of accurate time delays under software control. Instead of setting up timing loops in software, the programmer configures the 8254 to match his requirements and programs one of the counters for the desired delay. After the desired delay, the 8254 will interrupt the CPU. Software overhead is minimal and variable length delays can easily be accommodated.

Some of the other counter/timer functions common to microcomputers which can be implemented with the 8254 are:

- Real time clock
- Event counter
- Digital one-shot
- Programmable rate generator
- Square wave generator
- Binary rate multiplier
- Complex waveform generator
- Complex motor controller

Block Diagram

DATA BUS BUFFER

This 3-state, bi-directional, 8-bit buffer is used to interface the 8254 to the system bus (see Figure 3).

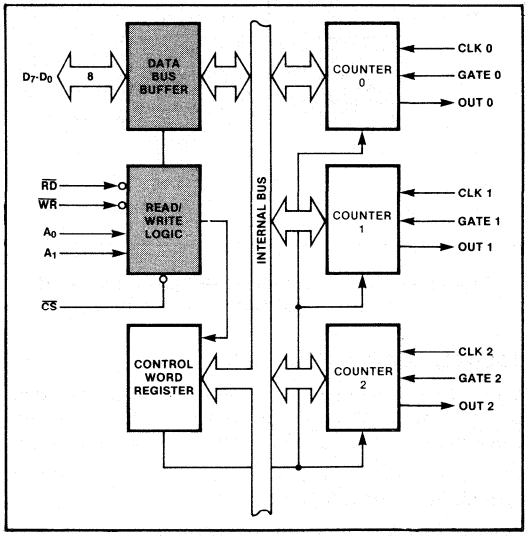

Figure 3. Block Diagram Showing Data Bus Buffer and Read/Write Logic Functions

READ/WRITE LOGIC

The Read/Write Logic accepts inputs from the system bus and generates control signals for the other functional blocks of the 8254. A_1 and A_0 select one of the three counters or the Control Word Register to be read from/written into. A "low" on the $\overline{RD}$ input tells the 8254 that the CPU is reading one of the counters. A "low" on the $\overline{WR}$ input tells the 8254 that the CPU is writing either a Control Word or an initial count. Both $\overline{RD}$ and $\overline{WR}$ are qualified by $\overline{CS}$; $\overline{RD}$ and $\overline{WR}$ are ignored unless the 8254 has been selected by holding $\overline{CS}$ low.

CONTROL WORD REGISTER

The Control Word Register (see Figure 4) is selected by the Read/Write Logic when $A_1,A_0 = 11$. If the CPU then does a write operation to the 8254, the data is stored in the Control Word Register and is interpreted as a Control Word used to define the operation of the Counters.

The Control Word Register can only be written to; status information is available with the Read-Back Command.

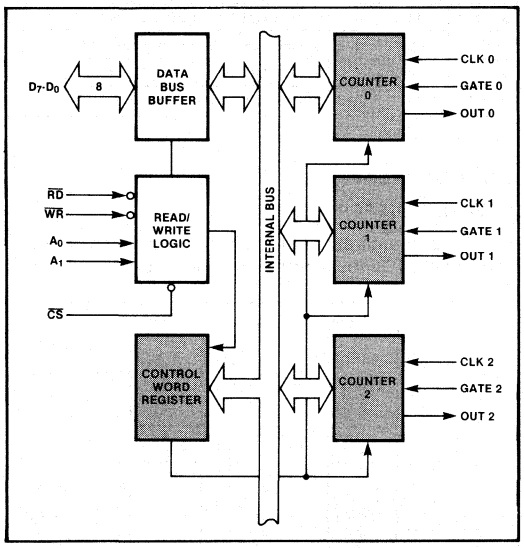

Figure 4. Block Diagram Showing Control Word Register and Counter Functions

COUNTER 0, COUNTER 1, COUNTER 2

These three functional blocks are identical in operation, so only a single Counter will be described. The internal block diagram of a single counter is shown in Figure 5.

The Counters are fully independent. Each Counter may operate in a different Mode.

The Control Word Register is shown in the figure; it is not part of the Counter itself, but its contents determine how the Counter operates.

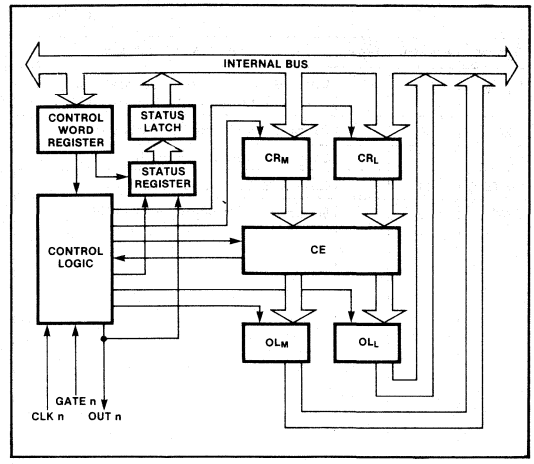

Figure 5. Internal Block Diagram of a Counter

The status register, shown in the Figure, when latched, contains the current contents of the Control Word Register and status of the output and null count flag. (See detailed explanation of the Read-Back command.)

The actual counter is labelled CE (for "Counting Element"). It is a 16-bit presettable synchronous down counter.

OL_M and OL_L are two 8-bit latches. OL stands for "Output Latch"; the subscripts M and L stand for "Most significant byte" and "Least significant byte" respectively. Both are normally referred to as one unit and called just OL. These latches normally "follow" the CE, but if a suitable Counter Latch Command is sent to the 8254, the latches "latch" the present count until read by the CPU and then return to "following" the CE. One latch at a time is enabled by the counter's Control Logic to drive the internal bus. This is how the 16-bit Counter communicates over the 8-bit internal bus. Note that the CE itself cannot be read; whenever you read the count, it is the OL that is being read.

Similarly, there are two 8-bit registers called CR_M and CR_L (for "Count Register"). Both are normally referred to as one unit and called just CR. When a new count is written to the Counter, the count is stored in the CR and later transferred to the CE. The Control Logic allows one register at a time to be loaded from the internal bus. Both bytes are transferred to the CE simultaneously. CR_M and CR_L are cleared when the Counter is programmed. In this way, if the Counter has been programmed for one byte counts (either most significant byte only or least significant byte only) the other byte will be zero. Note that the CE cannot be written into; whenever a count is written, it is written into the CR.

The Control Logic is also shown in the diagram. CLK n, GATE n, and OUT n are all connected to the outside world through the Control Logic.

8254 SYSTEM INTERFACE

The 8254 is a component of the Intel Microcomputer Systems and interfaces in the same manner as all other peripherals of the family. It is treated by the systems software as an array of peripheral I/O ports; three are counters and the fourth is a control register for MODE programming.

Basically, the select inputs A_0, A_1 connect to the A_0, A_1 address bus signals of the CPU. The CS can be derived directly from the address bus using a linear select method. Or it can be connected to the output of a decoder, such as an Intel 8205 for larger systems.

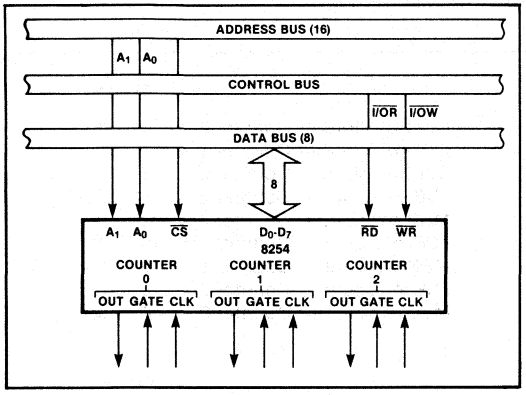

Figure 6. 8254 System Interface

OPERATIONAL DESCRIPTION

General

After power-up, the state of the 8254 is undefined. The Mode, count value, and output of all Counters are undefined.

How each Counter operates is determined when it is programmed. Each Counter must be programmed before it can be used. Unused counters need not be programmed.

Programming the 8254

Counters are programmed by writing a Control Word and then an initial count.

All Control Words are written into the Control Word Register, which is selected when $A_1,A_0 = 11$. The Control Word itself specifies which Counter is being programmed.

By contrast, initial counts are written into the Counters, not the Control Word Register. The A_1,A_0 inputs are used to select the Counter to be written into. The format of the initial count is determined by the Control Word used.

Control Word Format

$A_1,A_0 = 11$ $\overline{CS} = 0$ $\overline{RD} = 1$ $\overline{WR} = 0$

D_7	D_6	D_5	D_4	D_3	D_2	D_1	D_0
SC1	SC0	RW1	RW0	M2	M1	M0	BCD

SC — Select Counter:

SC1	SC0	
0	0	Select Counter 0
0	1	Select Counter 1
1	0	Select Counter 2
1	1	Read-Back Command (See Read Operations)

RW — Read/Write:

RW1	RW0	
0	0	Counter Latch Command (see Read Operations)
0	1	Read/Write least significant byte only.
1	0	Read/Write most significant byte only.
1	1	Read/Write least significant byte first, then most significant byte.

M — MODE:

M2	M1	M0	
0	0	0	Mode 0
0	0	1	Mode 1
X	1	0	Mode 2
X	1	1	Mode 3
1	0	0	Mode 4
1	0	1	Mode 5

BCD:

0	Binary Counter 16-bits
1	Binary Coded Decimal (BCD) Counter (4 Decades)

NOTE: DON'T CARE BITS (X) SHOULD BE 0 TO INSURE COMPATIBILITY WITH FUTURE INTEL PRODUCTS.

Figure 7. Control Word Format

Write Operations

The programming procedure for the 8254 is very flexible. Only two conventions need to be remembered:

1) For each Counter, the Control Word must be written before the initial count is written.
2) The initial count must follow the count format specified in the Control Word (least significant byte only, most significant byte only, or least significant byte and then most significant byte).

Since the Control Word Register and the three Counters have separate addresses (selected by the A_1,A_0 inputs), and each Control Word specifies the Counter it applies to (SC0,SC1 bits), no special instruction sequence is required. Any programming sequence that follows the conventions above is acceptable.

A new initial count may be written to a Counter at any time without affecting the Counter's programmed Mode in any way. Counting will be affected as described in the Mode definitions. The new count must follow the programmed count format.

If a Counter is programmed to read/write two-byte counts, the following precaution applies: A program must not transfer control between writing the first and second byte to another routine which also writes into that same Counter. Otherwise, the Counter will be loaded with an incorrect count.

	A_1	A_0
Control Word — Counter 0	1	1
LSB of count — Counter 0	0	0
MSB of count — Counter 0	0	0
Control Word — Counter 1	1	1
LSB of count — Counter 1	0	1
MSB of count — Counter 1	0	1
Control Word — Counter 2	1	1
LSB of count — Counter 2	1	0
MSB of count — Counter 2	1	0

	A_1	A_0
Control Word — Counter 2	1	1
Control Word — Counter 1	1	1
Control Word — Counter 0	1	1
LSB of count — Counter 2	1	0
MSB of count — Counter 2	1	0
LSB of count — Counter 1	0	1
MSB of count — Counter 1	0	1
LSB of count — Counter 0	0	0
MSB of count — Counter 0	0	0

	A_1	A_0
Control Word — Counter 0	1	1
Control Word — Counter 1	1	1
Control Word — Counter 2	1	1
LSB of count — Counter 2	1	0
LSB of count — Counter 1	0	1
LSB of count — Counter 0	0	0
MSB of count — Counter 0	0	0
MSB of count — Counter 1	0	1
MSB of count — Counter 2	1	0

	A_1	A_0
Control Word — Counter 1	1	1
Control Word — Counter 0	1	1
LSB of count — Counter 1	0	1
Control Word — Counter 2	1	1
LSB of count — Counter 0	0	0
MSB of count — Counter 1	0	1
LSB of count — Counter 2	1	0
MSB of count — Counter 0	0	0
MSB of count — Counter 2	1	0

NOTE: IN ALL FOUR EXAMPLES, ALL COUNTERS ARE PROGRAMMED TO READ/WRITE TWO-BYTE COUNTS. THESE ARE ONLY FOUR OF MANY POSSIBLE PROGRAMMING SEQUENCES.

Figure 8. A Few Possible Programming Sequences

Read Operations

It is often desirable to read the value of a Counter without disturbing the count in progress. This is easily done in the 8254.

There are three possible methods for reading the Counters. The first is through the Read-Back command, which is explained later. The second is a simple read operation of the Counter, which is selected with the A_1,A_0 inputs. The only requirement is that the CLK input of the selected Counter must be inhibited by using either the GATE input or external logic. Otherwise, the count may be in process of changing when it is read, giving an undefined result.

COUNTER LATCH COMMAND

The other method involves a special software command called the "Counter Latch Command". Like a Control Word, this command is written to the Control Word Register, which is selected when $A_1,A_0 = 11$. Also like a Control Word, the SC0,SC1 bits select one of the three Counters, but two other bits, D5 and D4, distinguish this command from a Control Word.

A_1,A_0=11; CS=0; RD=1; WR=0

D_7	D_6	D_5	D_4	D_3	D_2	D_1	D_0
SC1	SC0	0	0	X	X	X	X

SC1,SC0 — specify counter to be latched

SC1	SC0	Counter
0	0	0
0	1	1
1	0	2
1	1	Read-Back Command

D5,D4 — 00 designates Counter Latch Command

X — don't care

NOTE: DON'T CARE BITS (X) SHOULD BE 0 TO INSURE COMPATIBILITY WITH FUTURE INTEL PRODUCTS.

Figure 9. Counter Latching Command Format

The selected Counter's output latch (OL) latches the count at the time the Counter Latch Command is received. This count is held in the latch until it is read by the CPU (or until the Counter is reprogrammed). The count is then unlatched automatically and the OL returns to "following" the counting element (CE). This allows reading the contents of the Counters "on the fly" without affecting counting in progress. Multiple Counter Latch Commands may be used to latch more than one Counter. Each latched Counter's OL holds its count until it is read. Counter Latch Commands do not affect the programmed Mode of the Counter in any way.

If a Counter is latched and then, some time later, latched again before the count is read, the second Counter Latch Command is ignored. The count read will be the count at the time the first Counter Latch Command was issued.

With either method, the count must be read according to the programmed format; specifically, if the Counter is programmed for two byte counts, two bytes must be read. The two bytes do not have to be read one right after the other; read or write or programming operations of other Counters may be inserted between them.

Another feature of the 8254 is that reads and writes of the same Counter may be interleaved; for example, if the Counter is programmed for two byte counts, the following sequence is valid.

1. Read least significant byte.
2. Write new least significant byte.
3. Read most significant byte.
4. Write new most significant byte.

If a Counter is programmed to read/write two-byte counts, the following precaution applies: A program must not transfer control between reading the first and second byte to another routine which also reads from that same Counter. Otherwise, an incorrect count will be read.

READ-BACK COMMAND

The read-back command allows the user to check the count value, programmed Mode, and current state of the OUT pin and Null Count flag of the selected counter(s).

The command is written into the Control Word Register and has the format shown in Figure 10. The command applies to the counters selected by setting their corresponding bits D3,D2,D1=1.

A0, A1 = 11 $\overline{CS}$ = 0 $\overline{RD}$ = 1 $\overline{WR}$ = 0

D_7	D_6	D_5	D_4	D_3	D_2	D_1	D_0
1	1	$\overline{COUNT}$	STATUS	CNT 2	CNT 1	CNT 0	0

D_5: 0 = LATCH COUNT OF SELECTED COUNTER(S)
D_4: 0 = LATCH STATUS OF SELECTED COUNTER(S)
D_3: 1 = SELECT COUNTER 2
D_2: 1 = SELECT COUNTER 1
D_1: 1 = SELECT COUNTER 0
D_0: RESERVED FOR FUTURE EXPANSION; MUST BE 0

Figure 10. Read-Back Command Format

The read-back command may be used to latch multiple counter output latches (OL) by setting the $\overline{COUNT}$ bit D5=0 and selecting the desired counter(s). This single command is functionally equivalent to several counter latch commands, one for each counter latched. Each counter's latched count is held until it is read (or the counter is reprogrammed). That counter is automatically unlatched when read, but other counters remain latched until they are read. If multiple count read-back commands are issued to the same counter without reading the count, all but the first are ignored; i.e., the count which will be read is the count at the time the first read-back command was issued.

The read-back command may also be used to latch status information of selected counter(s) by setting $\overline{STATUS}$ bit D4 = 0. Status must be latched to be read; status of a counter is accessed by a read from that counter.

The counter status format is shown in Figure 11. Bits D5 through D0 contain the counter's programmed Mode exactly as written in the last Mode Control Word. OUTPUT bit D7 contains the current state of the OUT pin. This allows the user to monitor the counter's output via software, possibly eliminating some hardware from a system.

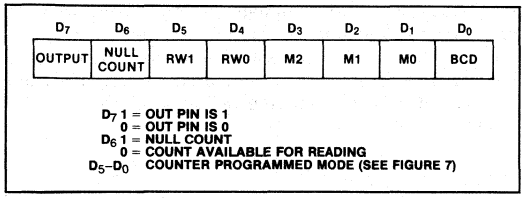

Figure 11. Status Byte

NULL COUNT bit D6 indicates when the last count written to the counter register (CR) has been loaded into the counting element (CE). The exact time this happens depends on the Mode of the counter and is described in the Mode Definitions, but until the count is loaded into the counting element (CE), it can't be read from the counter. If the count is latched or read before this time, the count value will not reflect the new count just written. The operation of Null Count is shown in Figure 12.

THIS ACTION:	CAUSES:
A. WRITE TO THE CONTROL WORD REGISTER:[1]	NULL COUNT=1
B. WRITE TO THE COUNT REGISTER (CR);[2]	NULL COUNT=1
C. NEW COUNT IS LOADED INTO CE (CR→CE);	NULL COUNT=0

[1] ONLY THE COUNTER SPECIFIED BY THE CONTROL WORD WILL HAVE ITS NULL COUNT SET TO 1. NULL COUNT BITS OF OTHER COUNTERS ARE UNAFFECTED.

[2] IF THE COUNTER IS PROGRAMMED FOR TWO-BYTE COUNTS (LEAST SIGNIFICANT BYTE THEN MOST SIGNIFICANT BYTE) NULL COUNT GOES TO 1 WHEN THE SECOND BYTE IS WRITTEN.

Figure 12. Null Count Operation

If multiple status latch operations of the counter(s) are performed without reading the status, all but the first are ignored; i.e., the status that will be read is the status of the counter at the time the first status read-back command was issued.

Both count and status of the selected counter(s) may be latched simultaneously by setting both $\overline{\text{COUNT}}$ and $\overline{\text{STATUS}}$ bits D5,D4=0. This is functionally the same as issuing two separate read-back commands at once, and the above discussions apply here also. Specifically, if multiple count and/or status read-back commands are issued to the same counter(s) without any intervening reads, all but the first are ignored. This is illustrated in Figure 13.

Command D_7	D_6	D_5	D_4	D_3	D_2	D_1	D_0	Description	Result
1	1	0	0	0	0	1	0	Read back count and status of Counter 0	Count and status latched for Counter 0
1	1	1	0	0	1	0	0	Read back status of Counter 1	Status latched for Counter 1
1	1	1	0	1	1	0	0	Read back status of Counters 2, 1	Status latched for Counter 2, but not Counter 1
1	1	0	1	1	0	0	0	Read back count of Counter 2	Count latched for Counter 2
1	1	0	0	0	1	0	0	Read back count and status of Counter 1	Count latched for Counter 1, but not status
1	1	1	0	0	0	1	0	Read back status of Counter 1	Command ignored, status already latched for Counter 1

Figure 13. Read-Back Command Example

If both count and status of a counter are latched, the first read operation of that counter will return latched status, regardless of which was latched first. The next one or two reads (depending on whether the counter is programmed for one or two type counts) return latched count. Subsequent reads return unlatched count.

$\overline{CS}$	$\overline{RD}$	$\overline{WR}$	A_1	A_0	
0	1	0	0	0	Write into Counter 0
0	1	0	0	1	Write into Counter 1
0	1	0	1	0	Write into Counter 2
0	1	0	1	1	Write Control Word
0	0	1	0	0	Read from Counter 0
0	0	1	0	1	Read from Counter 1
0	0	1	1	0	Read from Counter 2
0	0	1	1	1	No-Operation (3-State)
1	X	X	X	X	No-Operation (3-State)
0	1	1	X	X	No-Operation (3-State)

Figure 14. Read/Write Operations Summary

Mode Definitions

The following are defined for use in describing the operation of the 8254.

CLK pulse: a rising edge, then a falling edge, in that order, of a Counter's CLK input.

trigger: a rising edge of a Counter's GATE input.

Counter loading: the transfer of a count from the CR to the CE (refer to the "Functional Description")

MODE 0: INTERRUPT ON TERMINAL COUNT

Mode 0 is typically used for event counting. After the Control Word is written, OUT is initially low, and will remain low until the Counter reaches zero. OUT then goes high and remains high until a new count or a new Mode 0 Control Word is written into the Counter.

GATE = 1 enables counting; GATE = 0 disables counting. GATE has no effect on OUT.

After the Control Word and initial count are written to a Counter, the initial count will be loaded on the next CLK pulse. This CLK pulse does not decrement the count, so for an initial count of N, OUT does not go high until N + 1 CLK pulses after the initial count is written.

If a new count is written to the Counter, it will be loaded on the next CLK pulse and counting will continue from the new count. If a two-byte count is written, the following happens:

1) Writing the first byte disables counting. OUT is set low immediately (no clock pulse required)
2) Writing the second byte allows the new count to be loaded on the next CLK pulse.

This allows the counting sequence to be synchronized by software. Again, OUT does not go high until N + 1 CLK pulses after the new count of N is written.

If an initial count is written while GATE = 0, it will still be loaded on the next CLK pulse. When GATE goes high, OUT will go high N CLK pulses later; no CLK pulse is needed to load the Counter as this has already been done.

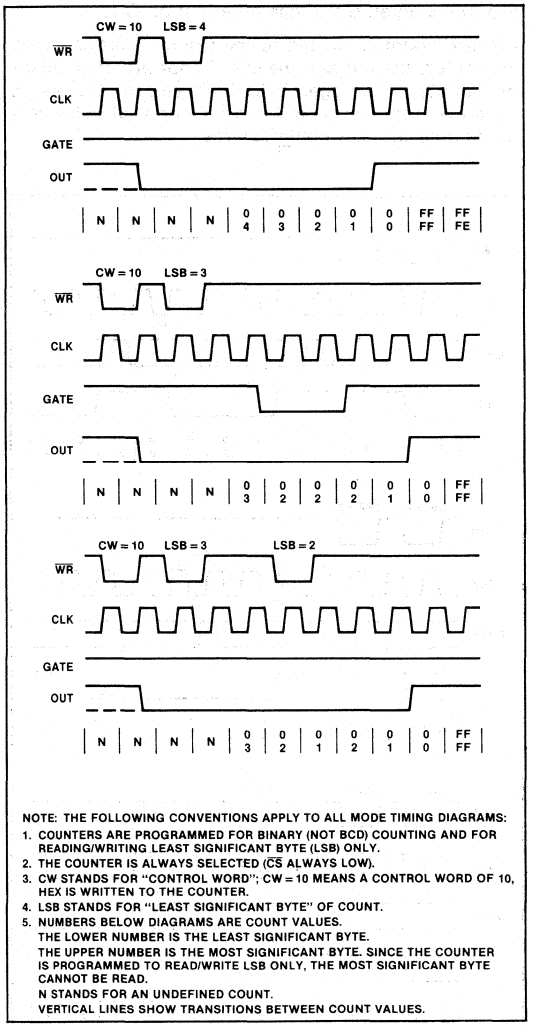

Figure 15. Mode 0

MODE 1: HARDWARE RETRIGGERABLE ONE-SHOT

OUT will be initially high. OUT will go low on the CLK pulse following a trigger to begin the one-shot pulse, and will remain low until the Counter reaches zero. OUT will then go high and remain high until the CLK pulse after the next trigger.

After writing the Control Word and initial count, the Counter is armed. A trigger results in loading the Counter and setting OUT low on the next CLK pulse, thus starting the one-shot pulse. An initial count of N will result in a one-shot pulse N CLK cycles in duration. The one-shot is retriggerable, hence OUT will remain low for N CLK pulses after any trigger. The one-shot pulse can be repeated without rewriting the same count into the counter. GATE has no effect on OUT.

If a new count is written to the Counter during a one-shot pulse, the current one-shot is not affected unless the Counter is retriggered. In that case, the Counter is loaded with the new count and the one-shot pulse continues until the new count expires.

MODE 2: RATE GENERATOR

This Mode functions like a divide-by-N counter. It is typiclaly used to generate a Real Time Clock interrupt. OUT will initially be high. When the initial count has decremented to 1, OUT goes low for one CLK pulse. OUT then goes high again, the Counter reloads the initial count and the process is repeated. Mode 2 is periodic; the same sequence is repeated indefinitely. For an initial count of N, the sequence repeats every N CLK cycles.

GATE = 1 enables counting; GATE = 0 disables counting. If GATE goes low during an output pulse, OUT is set high immediately. A trigger reloads the Counter with the initial count on the next CLK pulse; OUT goes low N CLK pulses after the trigger. Thus the GATE input can be used to synchronize the Counter.

After writing a Control Word and initial count, the Counter will be loaded on the next CLK pulse. OUT goes low N CLK Pulses after the initial count is written. This allows the Counter to be synchronized by software also.

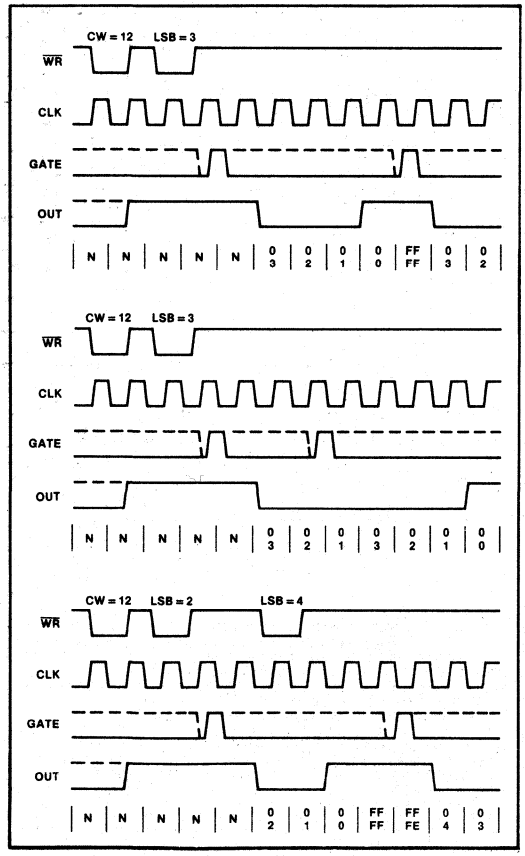

Figure 16. Mode 1

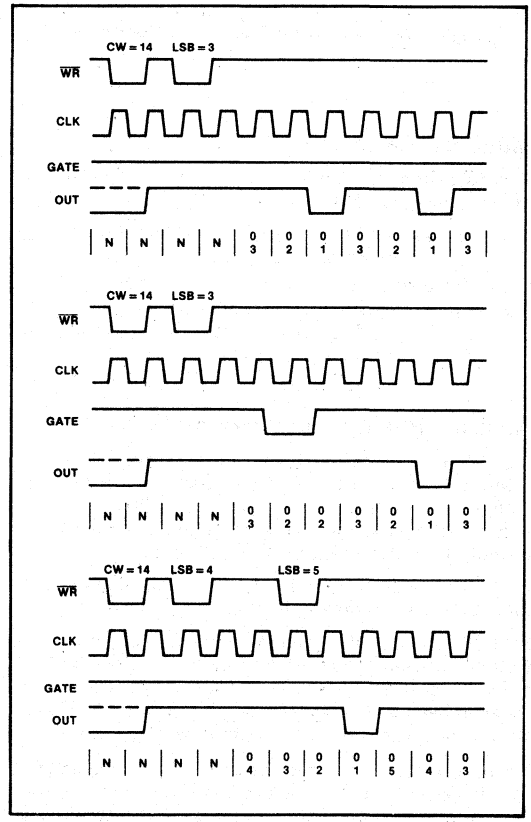

Figure 17. Mode 2

Writing a new count while counting does not affect the current counting sequence. If a trigger is received after writing a new count but before the end of the current period, the Counter will be loaded with the new count on the next CLK pulse and counting will continue from the new count. Otherwise, the new count will be loaded at the end of the current counting cycle.

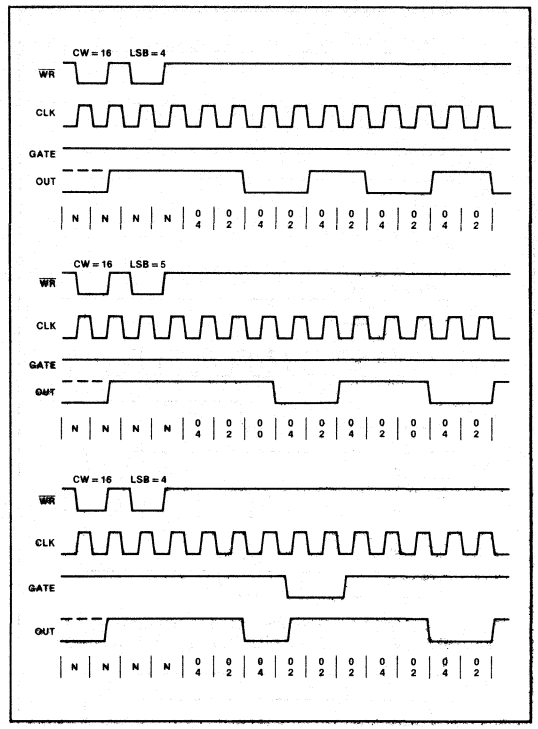

Figure 18. Mode 3

MODE 3: SQUARE WAVE MODE

Mode 3 is typically used for Baud rate generation. Mode 3 is similar to Mode 2 except for the duty cycle of OUT. OUT will initially be high. When half the initial count has expired, OUT goes low for the remainder of the count. Mode 3 is periodic; the sequence above is repeated indefinitely. An initial count of N results in a square wave with a period of N CLK cycles.

GATE = 1 enables counting; GATE = 0 disables counting. If GATE goes low while OUT is low, OUT is set high immediately; no CLK pulse is required. A trigger reloads the Counter with the initial count on the next CLK pulse. Thus the GATE input can be used to synchronize the Counter.

After writing a Control Word and initial count, the Counter will be loaded on the next CLK pulse. This allows the Counter to be synchronized by software also.

Writing a new count while counting does not affect the current counting sequence. If a trigger is received after writing a new count but before the end of the current half-cycle of the square wave, the Counter will be loaded with the new count on the next CLK pulse and counting will continue from the new count. Otherwise, the new count will be loaded at the end of the current half-cycle.

Mode 3 is implemented as follows:

Even counts: OUT is initially high. The initial count is loaded on one CLK pulse and then is decremented by two on succeeding CLK pulses. When the count expires OUT changes value and the Counter is reloaded with the initial count. The above process is repeated indefinitely.

Odd counts: OUT is initially high. The initial count minus one (an even number) is loaded on one CLK pulse and then is decremented by two on succeeding CLK pulses. One CLK pulse *after* the count expires, OUT goes low and the Counter is reloaded with the initial count minus one. Succeeding CLK pulses decrement the count by two. When the count expires, OUT goes high again and the Counter is reloaded with the initial count minus one. The above process is repeated indefinitely. So for odd counts, OUT will be high for (N + 1)/2 counts and low for (N – 1)/2 counts.

MODE 4: SOFTWARE TRIGGERED STROBE

OUT will be initially high. When the initial count expires, OUT will go low for one CLK pulse and then go high again. The counting sequence is "triggered" by writing the initial count.

GATE = 1 enables counting; GATE = 0 disables counting. GATE has no effect on OUT.

After writing a Control Word and initial count, the Counter will be loaded on the next CLK pulse. This CLK pulse does not decrement the count, so for an initial count of N, OUT does not strobe low until N + 1 CLK pulses after the initial count is written.

If a new count is written during counting, it will be loaded on the next CLK pulse and counting will continue from the new count. If a two-byte count is written, the following happens:

1) Writing the first byte has no effect on counting.
2) Writing the second byte allows the new count to be loaded on the next CLK pulse.

This allows the sequence to be "retriggered" by software. OUT strobes low N + 1 CLK pulses after the new count of N is written.

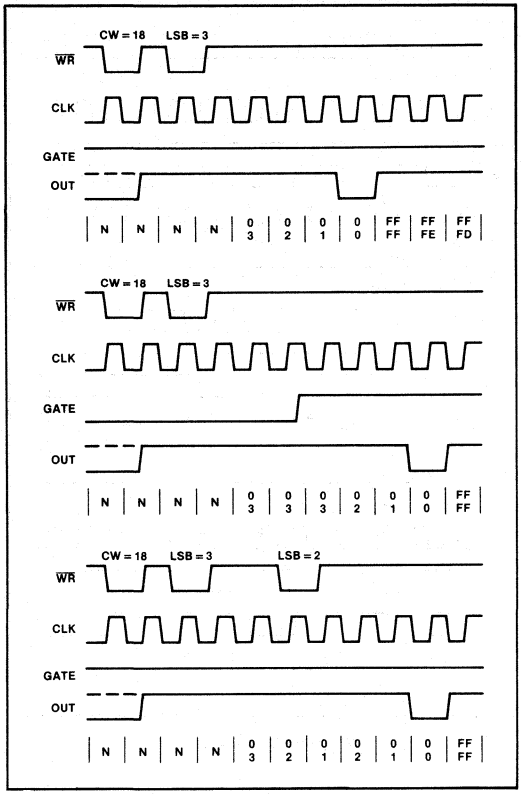

Figure 19. Mode 4

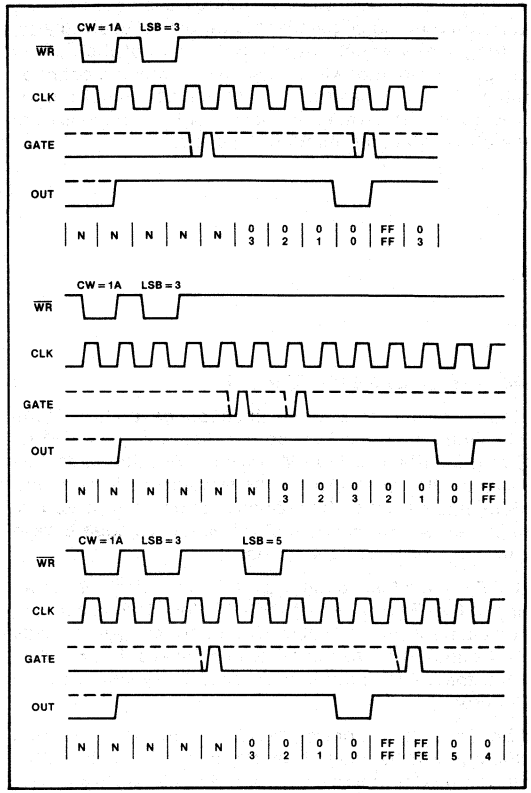

Figure 20. Mode 5

MODE 5: HARDWARE TRIGGERED STROBE (RETRIGGERABLE)

OUT will initially be high. Counting is triggered by a rising edge of GATE. When the initial count has expired, OUT will go low for one CLK pulse and then go high again.

After writing the Control Word and initial count, the counter will not be loaded until the CLK pulse after a trigger. This CLK pulse does not decrement the count, so for an initial count of N, OUT does not strobe low until N + 1 CLK pulses after a trigger.

A trigger results in the Counter being loaded with the initial count on the next CLK pulse. The counting sequence is retriggerable. OUT will not strobe low for N + 1 CLK pulses after any trigger. GATE has no effect on OUT.

If a new count is written during counting, the curent counting sequence will not be affected. If a trigger occurs after the new count is written but before the current count expires, the Counter will be loaded with the new count on the next CLK pulse and counting will continue from there.

Signal Status Modes	Low Or Going Low	Rising	High
0	Disables counting	——	Enables counting
1	——	1) Initiates counting 2) Resets output after next clock	——
2	1) Disables counting 2) Sets output immediately high	Initiates counting	Enables counting
3	1) Disables counting 2) Sets output immediately high	Initiates counting	Enables counting
4	Disables counting	——	Enables counting
5	——	Initiates counting	——

Figure 21. Gate Pin Operations Summary

Mode	Min Count	Max Count
0	1	0
1	1	0
2	2	0
3	2	0
4	1	0
5	1	0

NOTE: 0 IS EQUIVALENT TO 2^{16} FOR BINARY COUNTING AND 10^4 FOR BCD COUNTING.

Figure 22. Minimum and Maximum Initial Counts

Operation Common to All Modes

PROGRAMMING

When a Control Word is written to a Counter, all Control Logic is immediately reset and OUT goes to a known initial state; no CLK pulses are required for this.

GATE

The GATE input is always sampled on the rising edge of CLK. In Modes 0, 2, 3, and 4 the GATE input is level sensitive, and the logic level is sampled on the rising edge of CLK. In Modes 1, 2, 3, and 5 the GATE input is rising-edge sensitive. In these Modes, a rising edge of GATE (trigger) sets an edge-sensitive flip-flop in the Counter. This flip-flop is then sampled on the next rising edge of CLK; the flip-flop is reset immediately after it is sampled. In this way, a trigger will be detected no matter when it occurs—a high logic level does not have to be maintained until the next rising edge of CLK. Note that in Modes 2 and 3, the GATE input is both edge- and level-sensitive.

COUNTER

New counts are loaded and Counters are decremented on the falling edge of CLK.

The largest possible initial count is 0; this is equivalent to 2^{16} for binary counting and 10^4 for BCD counting.

The Counter does not stop when it reaches zero. In Modes 0, 1, 4, and 5 the Counter "wraps around" to the highest count, either FFFF hex for binary counting or 9999 for BCD counting, and continues counting. Modes 2 and 3 are periodic; the Counter reloads itself with the initial count and continues counting from there.

ABSOLUTE MAXIMUM RATINGS*

Ambient Temperature Under Bias ..... 0°C to 70°C
Storage Temperature ..... −65°C to +150°C
Voltage on Any Pin with Respect to Ground ..... −0.5V to +7V
Power Dissipation ..... 1 Watt

**NOTICE: Stresses above those listed under "Absolute Maximum Ratings" may cause permanent damage to the device. This is a stress rating only and functional operation of the device at these or any other conditions above those indicated in the operational sections of this specification is not implied. Exposure to Absolute Maximum Rating conditions for extended periods may affect device reliability.*

D.C. CHARACTERISTICS (T_A = 0°C to 70°C, V_{CC} = 5V ± 10%)

Symbol	Parameter	Min.	Max.	Units	Test Conditions
V_{IL}	Input Low Voltage	−0.5	0.8	V	
V_{IH}	Input High Voltage	2.0	V_{CC} + 0.5V	V	
V_{OL}	Output Low Voltage		0.45	V	I_{OL} = 2.0 mA
V_{OH}	Output High Voltage	2.4		V	I_{OH} = −400μA
I_{IL}	Input Load Current		±10	μA	V_{IN} = V_{CC} to 0V
I_{OFL}	Output Float Leakage		±10	μA	V_{OUT} = V_{CC} to 0V
I_{CC}	V_{CC} Supply Current		140	mA	

CAPACITANCE (T_A=25°C, V_{CC}=GND=0V)

Symbol	Parameter	Min.	Max.	Units	Test Conditions
C_{IN}	Input Capacitance		10	pF	f_c = 1 MHz
$C_{I/O}$	I/O Capacitance		20	pF	Unmeasured pins returned to V_{SS}

A.C. CHARACTERISTICS (T_A = 0°C to 70°C, V_{CC} = 5V ± 10%, GND = 0V)

Bus Parameters (Note 1)

READ CYCLE

Symbol	Parameter	8254		8254-2		Unit
		Min.	Max.	Min.	Max.	
t_{AR}	Address Stable Before $\overline{RD}\downarrow$	45		30		ns
t_{SR}	$\overline{CS}$ Stable Before $\overline{RD}\downarrow$	0		0		ns
t_{RA}	Address Hold Time After $\overline{RD}\uparrow$	0		0		ns
t_{RR}	$\overline{RD}$ Pulse Width	150		95		ns
t_{RD}	Data Delay from $\overline{RD}\downarrow$		120		85	ns
t_{AD}	Data Delay from Address		220		185	ns
t_{DF}	$\overline{RD}\uparrow$ to Data Floating	5	90	5	65	ns
t_{RV}	Command Recovery Time	200		165		ns

Note 1: AC timings measured at V_{OH} = 2.0V, V_{OL} = 0.8V.

A.C. CHARACTERISTICS (Continued)

WRITE CYCLE

Symbol	Parameter	8254		8254-2		Unit
		Min.	Max.	Min.	Max.	
t_{AW}	Address Stable Before $\overline{WR}\downarrow$	0		0		ns
t_{SW}	$\overline{CS}$ Stable Before $\overline{WR}\downarrow$	0		0		ns
t_{WA}	Address Hold Time $\overline{WR}\uparrow$	0		0		ns
t_{WW}	$\overline{WR}$ Pulse Width	150		95		ns
t_{DW}	Data Setup Time Before $\overline{WR}\uparrow$	100		95		ns
t_{WD}	Data Hold Time After $\overline{WR}\uparrow$	0		0		ns
t_{RV}	Command Recovery Time	200		165		ns

CLOCK AND GATE ($T_A = 0°C$ to $70°C$, $V_{CC} = 5V \pm 10\%$, GND = 0V)

Symbol	Parameter	8254		8254-2		Unit
		Min.	Max.	Min.	Max.	
t_{CLK}	Clock Period	125	DC	100	DC	ns
t_{PWH}	High Pulse Width	60		30		ns
t_{PWL}	Low Pulse Width	60		50		ns
t_R	Clock Rise Time		100		100	ns
t_F	Clock Fall Time		100		100	ns
t_{GW}	Gate Width High	50		50		ns
t_{GL}	Gate Width Low	50		50		ns
t_{GS}	Gate Setup Time to CLK$\uparrow$	50		40		ns
t_{GH}	Gate Hold Time After CLK$\uparrow$	50[2]		50[2]		ns
t_{OD}	Output Delay from CLK$\downarrow$		150		100	ns
t_{ODG}	Output Delay from Gate$\downarrow$		120		100	ns

Note 2: In Modes 1 and 5 triggers are sampled on each rising clock edge. A second trigger within 120 ns (70 ns for the 8254-2) of the rising clock edge may not be detected.

A.C. TESTING INPUT, OUTPUT WAVEFORM

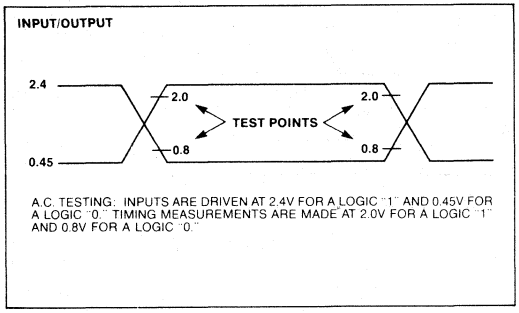

A.C. TESTING LOAD CIRCUIT

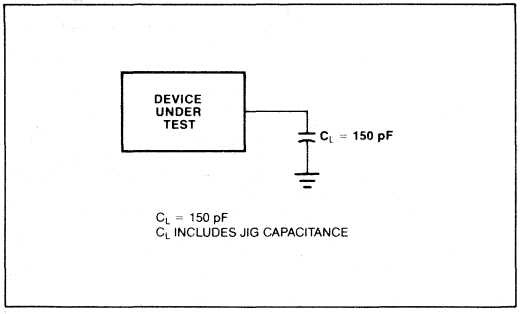

WAVEFORMS

WRITE

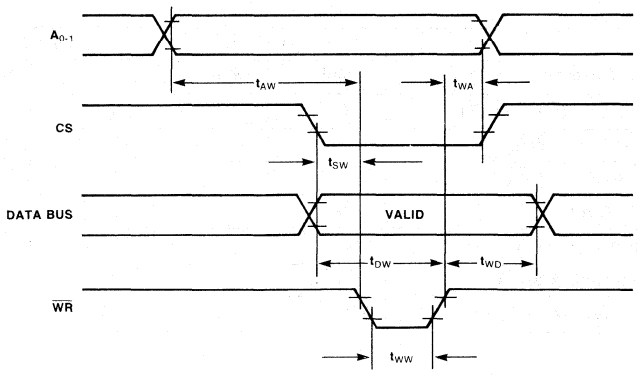

READ

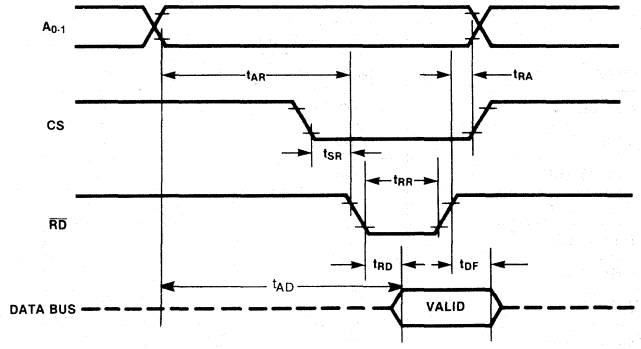

RECOVERY

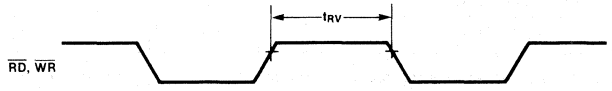

CLOCK AND GATE

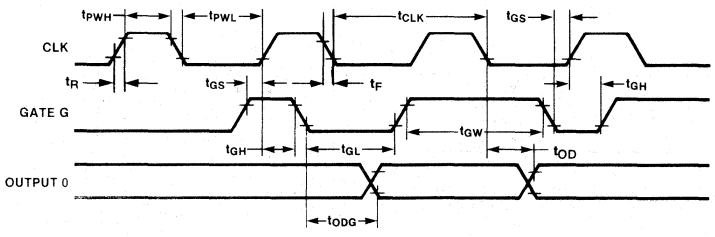

8255A/8255A-5
PROGRAMMABLE PERIPHERAL INTERFACE

- **MCS-85™ Compatible 8255A-5**
- **24 Programmable I/O Pins**
- **Completely TTL Compatible**
- **Fully Compatible with Intel® Microprocessor Families**
- **Improved Timing Characteristics**
- **Direct Bit Set/Reset Capability Easing Control Application Interface**
- **40-Pin Dual In-Line Package**
- **Reduces System Package Count**
- **Improved DC Driving Capability**

The Intel® 8255A is a general purpose programmable I/O device designed for use with Intel® microprocessors. It has 24 I/O pins which may be individually programmed in 2 groups of 12 and used in 3 major modes of operation. In the first mode (MODE 0), each group of 12 I/O pins may be programmed in sets of 4 to be input or output. In MODE 1, the second mode, each group may be programmed to have 8 lines of input or output. Of the remaining 4 pins, 3 are used for handshaking and interrupt control signals. The third mode of operation (MODE 2) is a bidirectional bus mode which uses 8 lines for a bidirectional bus, and 5 lines, borrowing one from the other group, for handshaking.

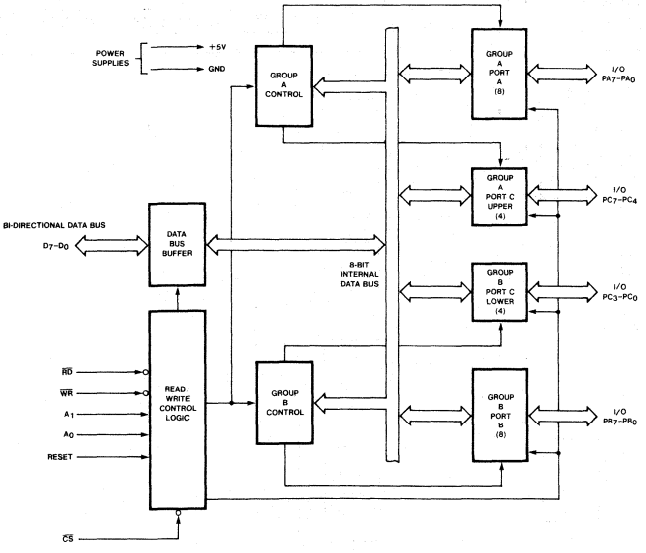

Figure 1. 8255A Block Diagram

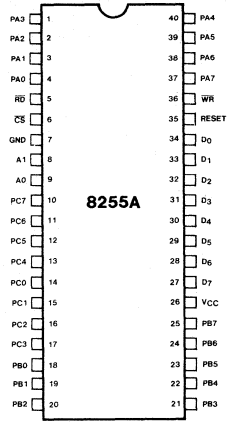

Figure 2. Pin Configuration

8255A FUNCTIONAL DESCRIPTION

General

The 8255A is a programmable peripheral interface (PPI) device designed for use in Intel® microcomputer systems. Its function is that of a general purpose I/O component to interface peripheral equipment to the microcomputer system bus. The functional configuration of the 8255A is programmed by the system software so that normally no external logic is necessary to interface peripheral devices or structures.

Data Bus Buffer

This 3-state bidirectional 8-bit buffer is used to interface the 8255A to the system data bus. Data is transmitted or received by the buffer upon execution of input or output instructions by the CPU. Control words and status information are also transferred through the data bus buffer.

Read/Write and Control Logic

The function of this block is to manage all of the internal and external transfers of both Data and Control or Status words. It accepts inputs from the CPU Address and Control busses and in turn, issues commands to both of the Control Groups.

($\overline{CS}$)

Chip Select. A "low" on this input pin enables the communiction between the 8255A and the CPU.

($\overline{RD}$)

Read. A "low" on this input pin enables the 8255A to send the data or status information to the CPU on the data bus. In essence, it allows the CPU to "read from" the 8255A.

($\overline{WR}$)

Write. A "low" on this input pin enables the CPU to write data or control words into the 8255A.

(A_0 and A_1)

Port Select 0 and Port Select 1. These input signals, in conjunction with the RD and WR inputs, control the selection of one of the three ports or the control word registers. They are normally connected to the least significant bits of the address bus (A_0 and A_1).

8255A BASIC OPERATION

A_1	A_0	$\overline{RD}$	$\overline{WR}$	$\overline{CS}$	INPUT OPERATION (READ)
0	0	0	1	0	PORT A ⇒ DATA BUS
0	1	0	1	0	PORT B ⇒ DATA BUS
1	0	0	1	0	PORT C ⇒ DATA BUS
					OUTPUT OPERATION (WRITE)
0	0	1	0	0	DATA BUS ⇒ PORT A
0	1	1	0	0	DATA BUS ⇒ PORT B
1	0	1	0	0	DATA BUS ⇒ PORT C
1	1	1	0	0	DATA BUS ⇒ CONTROL
					DISABLE FUNCTION
X	X	X	X	1	DATA BUS ⇒ 3-STATE
1	1	0	1	0	ILLEGAL CONDITION
X	X	1	1	0	DATA BUS ⇒ 3-STATE

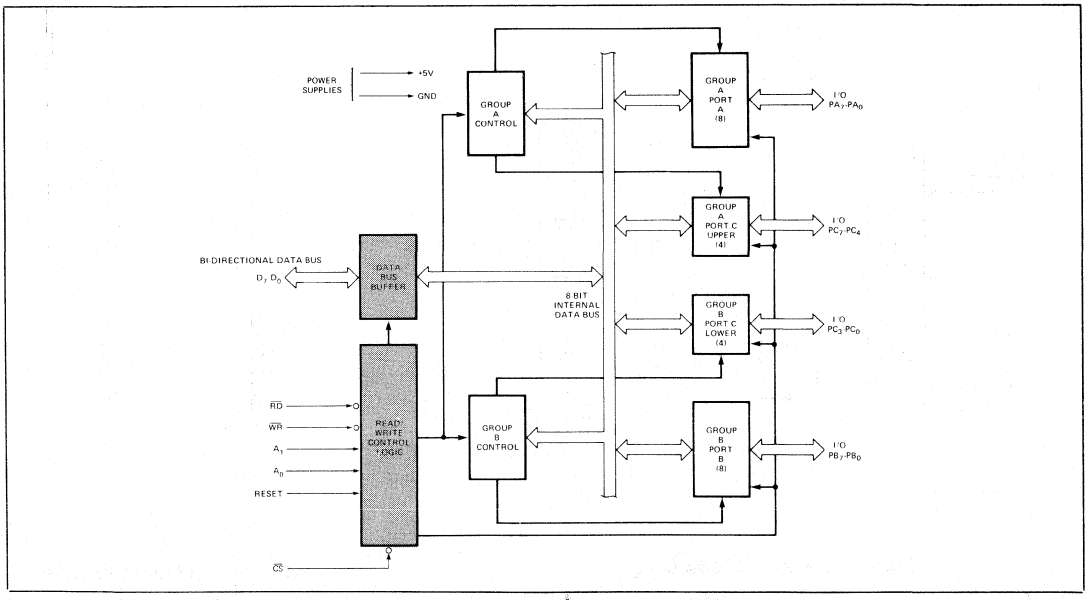

Figure 3. 8255A Block Diagram Showing Data Bus Buffer and Read/Write Control Logic Functions

(RESET)

Reset. A "high on this input clears the control register and all ports (A, C, C) are set to the input mode.

Group A and Group B Controls

The functional configuration of each port is programmed by the systems software. In essence, the CPU "outputs" a control word to the 8255A. The control word contains information such as "mode", "bit set", "bit reset", etc., that initializes the functional configuration of the 8255A.

Each of the Control blocks (Group A and Group B) accepts "commands" from the Read/Write Control Logic, receives "control words" from the internal data bus and issues the proper commands to its associated ports.

Control Group A – Port A and Port C upper (C7-C4)
Control Group B – Port B and Port C lower (C3-C0)

The Control Word Register can **Only** be written into. No Read operation of the Control Word Register is allowed.

Ports A, B, and C

The 8255A contains three 8-bit ports (A, B, and C). All can be configured in a wide variety of functional characteristics by the system software but each has its own special features or "personality" to further enhance the power and flexibility of the 8255A.

Port A. One 8-bit data output latch/buffer and one 8-bit data input latch.

Port B. One 8-bit data input/output latch/buffer and one 8-bit data input buffer.

Port C. One 8-bit data output latch/buffer and one 8-bit data input buffer (no latch for input). This port can be divided into two 4-bit ports under the mode control. Each 4-bit port contains a 4-bit latch and it can be used for the control signal outputs and status signal inputs in conjunction with ports A and B.

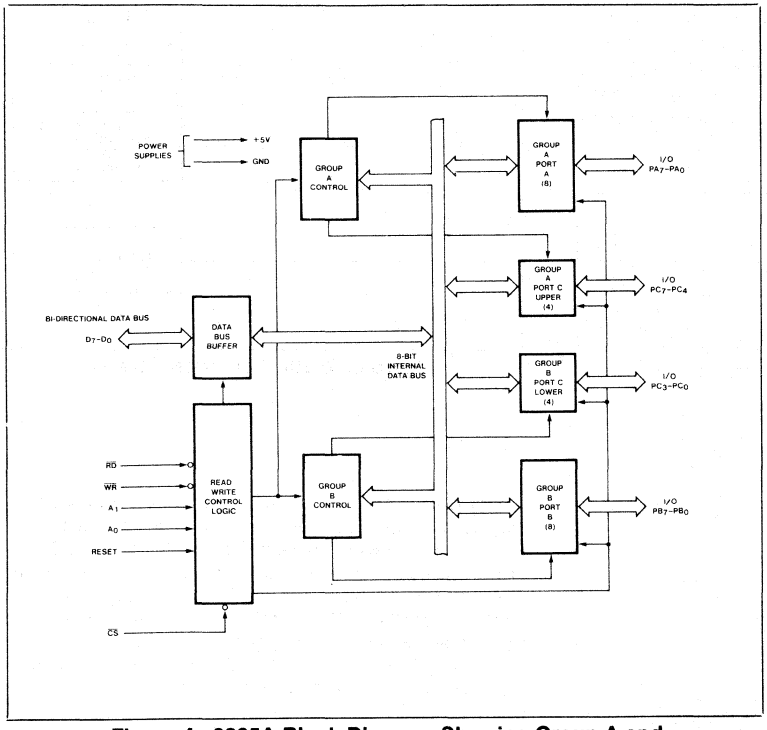

Figure 4. 8225A Block Diagram Showing Group A and Group B Control Functions

PIN CONFIGURATION

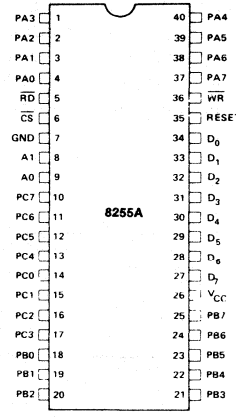

PIN NAMES

D_7 D_0	DATA BUS (BI-DIRECTIONAL)
RESET	RESET INPUT
$\overline{CS}$	CHIP SELECT
$\overline{RD}$	READ INPUT
$\overline{WR}$	WRITE INPUT
A0, A1	PORT ADDRESS
PA7-PA0	PORT A (BIT)
PB7-PB0	PORT B (BIT)
PC7-PC0	PORT C (BIT)
V_{CC}	+5 VOLTS
GND	0 VOLTS

8255A OPERATIONAL DESCRIPTION

Mode Selection

There are three basic modes of operation that can be selected by the system software:

Mode 0 — Basic Input/Output
Mode 1 — Strobed Input/Output
Mode 2 — Bi-Directional Bus

When the reset input goes "high" all ports will be set to the input mode (i.e., all 24 lines will be in the high impedance state). After the reset is removed the 8255A can remain in the input mode with no additional initialization required. During the execution of the system program any of the other modes may be selected using a single output instruction. This allows a single 8255A to service a variety of peripheral devices with a simple software maintenance routine.

The modes for Port A and Port B can be separately defined, while Port C is divided into two portions as required by the Port A and Port B definitions. All of the output registers, including the status flip-flops, will be reset whenever the mode is changed. Modes may be combined so that their functional definition can be "tailored" to almost any I/O structure. For instance; Group B can be programmed in Mode 0 to monitor simple switch closings or display computational results, Group A could be programmed in Mode 1 to monitor a keyboard or tape reader on an interrupt-driven basis.

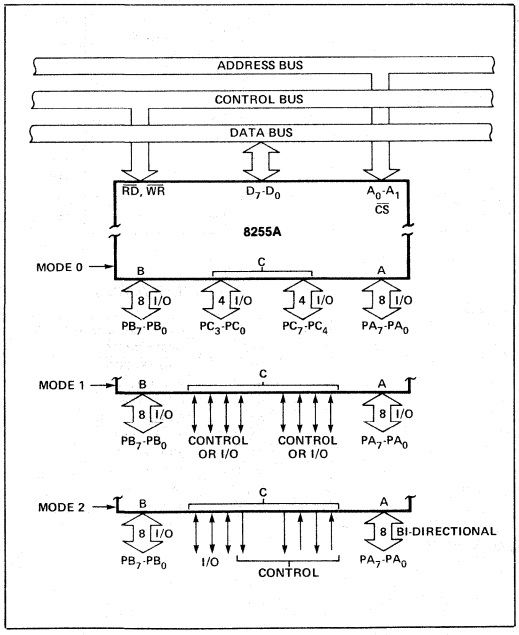

Figure 5. Basic Mode Definitions and Bus Interface

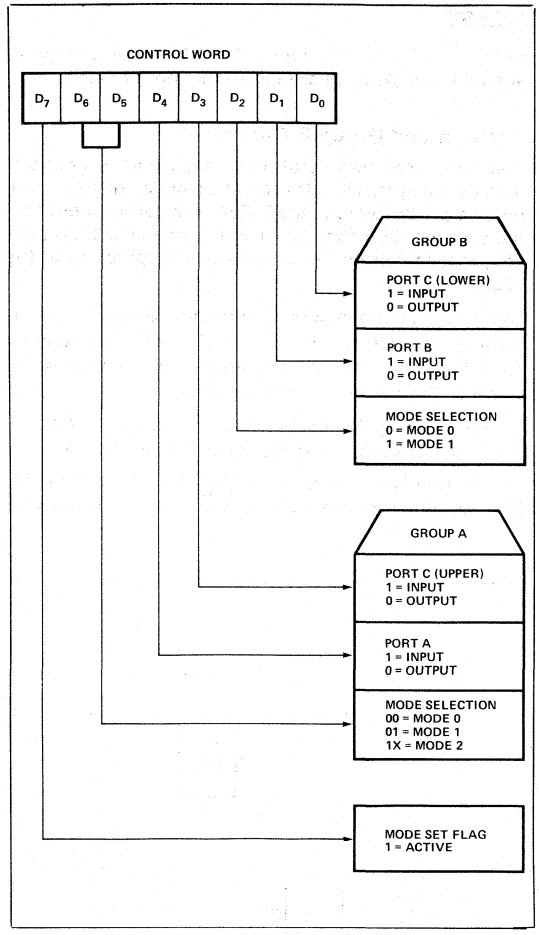

Figure 6. Mode Definition Format

The mode definitions and possible mode combinations may seem confusing at first but after a cursory review of the complete device operation a simple, logical I/O approach will surface. The design of the 8255A has taken into account things such as efficient PC board layout, control signal definition vs PC layout and complete functional flexibility to support almost any peripheral device with no external logic. Such design represents the maximum use of the available pins.

Single Bit Set/Reset Feature

Any of the eight bits of Port C can be Set or Reset using a single OUTput instruction. This feature reduces software requirements in Control-based applications.

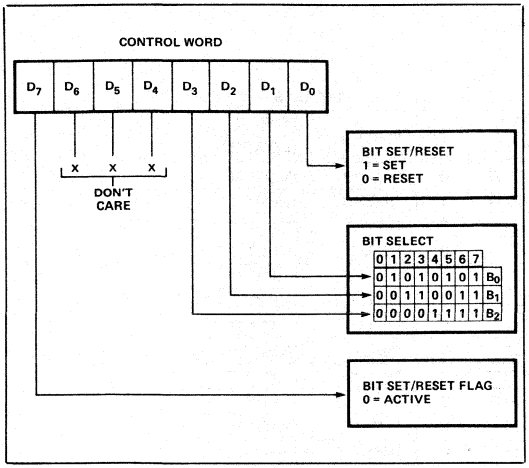

Figure 7. Bit Set/Reset Format

When Port C is being used as status/control for Port A or B, these bits can be set or reset by using the Bit Set/Reset operation just as if they were data output ports.

Interrupt Control Functions

When the 8255A is programmed to operate in mode 1 or mode 2, control signals are provided that can be used as interrupt request inputs to the CPU. The interrupt request signals, generated from port C, can be inhibited or enabled by setting or resetting the associated INTE flip-flop, using the bit set/reset function of port C.

This function allows the Programmer to disallow or allow a specific I/O device to interrupt the CPU without affecting any other device in the interrupt structure.

INTE flip-flop definition:

(BIT-SET) — INTE is SET — Interrupt enable
(BIT-RESET) — INTE is RESET — Interrupt disable

Note: All Mask flip-flops are automatically reset during mode selection and device Reset.

Operating Modes

MODE 0 (Basic Input/Output). This functional configuration provides simple input and output operations for each of the three ports. No "handshaking" is required, data is simply written to or read from a specified port.

Mode 0 Basic Functional Definitions:

- Two 8-bit ports and two 4-bit ports.
- Any port can be input or output.
- Outputs are latched.
- Inputs are not latched.
- 16 different Input/Output configurations are possible in this Mode.

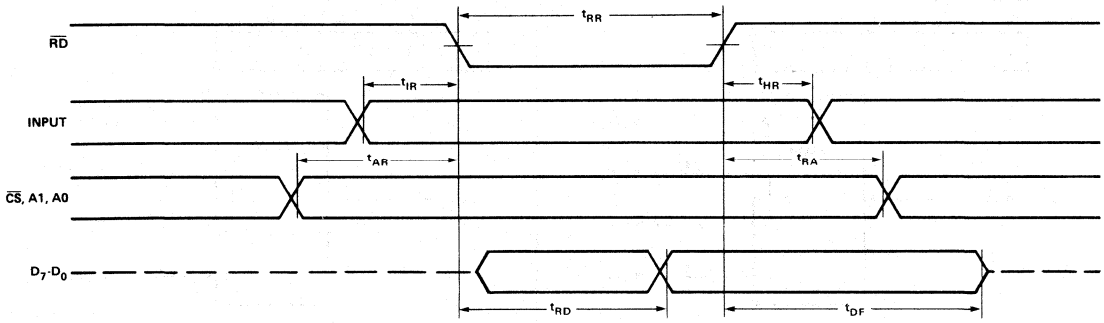

MODE 0 (Basic Input)

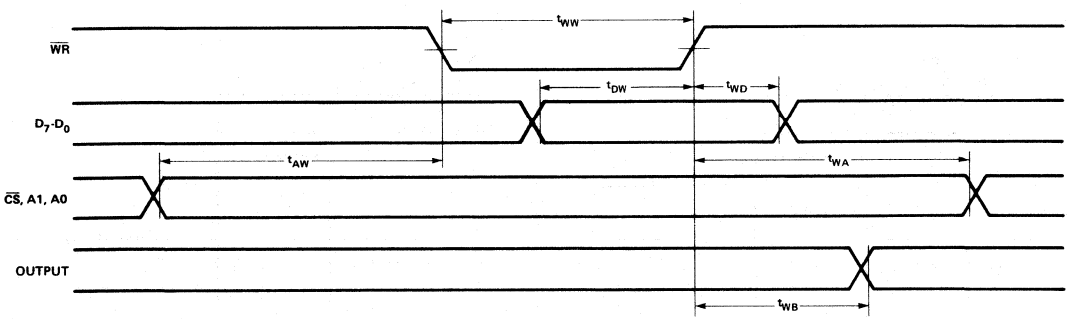

MODE 0 (Basic Output)

MODE 0 Port Definition

A		B		GROUP A			GROUP B	
D_4	D_3	D_1	D_0	PORT A	PORT C (UPPER)	#	PORT B	PORT C (LOWER)
0	0	0	0	OUTPUT	OUTPUT	0	OUTPUT	OUTPUT
0	0	0	1	OUTPUT	OUTPUT	1	OUTPUT	INPUT
0	0	1	0	OUTPUT	OUTPUT	2	INPUT	OUTPUT
0	0	1	1	OUTPUT	OUTPUT	3	INPUT	INPUT
0	1	0	0	OUTPUT	INPUT	4	OUTPUT	OUTPUT
0	1	0	1	OUTPUT	INPUT	5	OUTPUT	INPUT
0	1	1	0	OUTPUT	INPUT	6	INPUT	OUTPUT
0	1	1	1	OUTPUT	INPUT	7	INPUT	INPUT
1	0	0	0	INPUT	OUTPUT	8	OUTPUT	OUTPUT
1	0	0	1	INPUT	OUTPUT	9	OUTPUT	INPUT
1	0	1	0	INPUT	OUTPUT	10	INPUT	OUTPUT
1	0	1	1	INPUT	OUTPUT	11	INPUT	INPUT
1	1	0	0	INPUT	INPUT	12	OUTPUT	OUTPUT
1	1	0	1	INPUT	INPUT	13	OUTPUT	INPUT
1	1	1	0	INPUT	INPUT	14	INPUT	OUTPUT
1	1	1	1	INPUT	INPUT	15	INPUT	INPUT

MODE 0 Configurations

CONTROL WORD #0

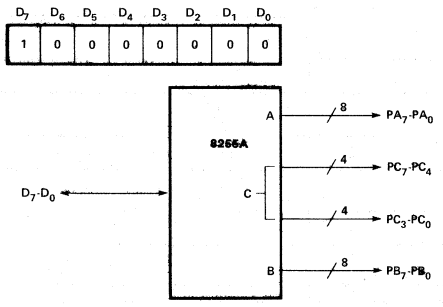

CONTROL WORD #2

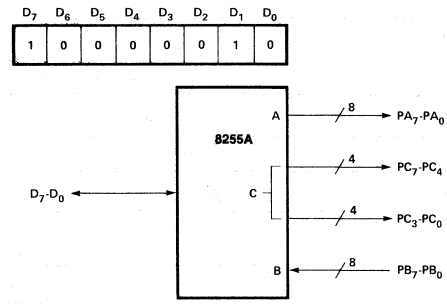

CONTROL WORD #1

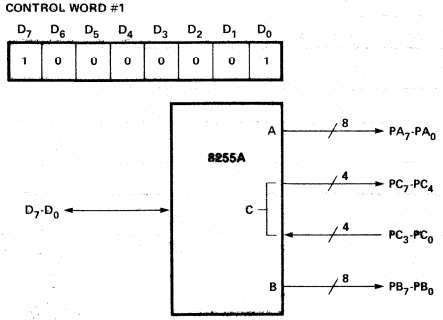

CONTROL WORD #3

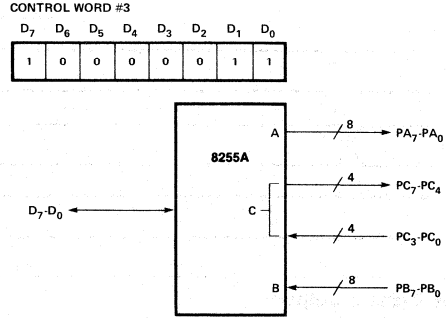

CONTROL WORD #4

D_7	D_6	D_5	D_4	D_3	D_2	D_1	D_0
1	0	0	0	1	0	0	0

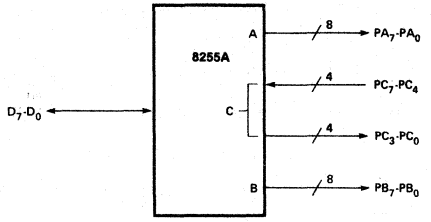

CONTROL WORD #8

D_7	D_6	D_5	D_4	D_3	D_2	D_1	D_0
1	0	0	1	0	0	0	0

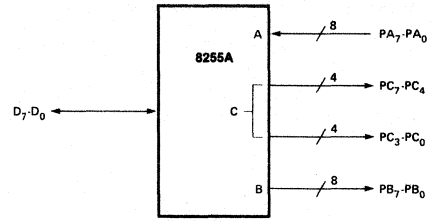

CONTROL WORD #5

D_7	D_6	D_5	D_4	D_3	D_2	D_1	D_0
1	0	0	0	1	0	0	1

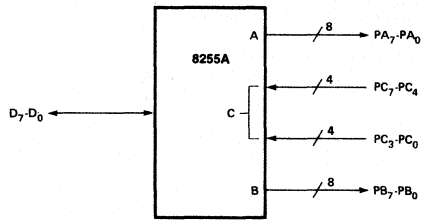

CONTROL WORD #9

D_7	D_6	D_5	D_4	D_3	D_2	D_1	D_0
1	0	0	1	0	0	0	1

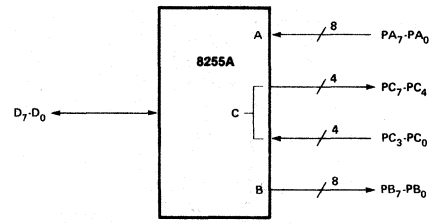

CONTROL WORD #6

D_7	D_6	D_5	D_4	D_3	D_2	D_1	D_0
1	0	0	0	1	0	1	0

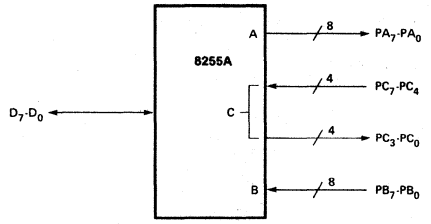

CONTROL WORD #10

D_7	D_6	D_5	D_4	D_3	D_2	D_1	D_0
1	0	0	1	0	0	1	0

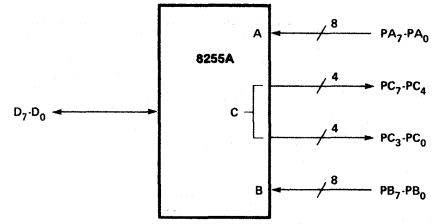

CONTROL WORD #7

D_7	D_6	D_5	D_4	D_3	D_2	D_1	D_0
1	0	0	0	1	0	1	1

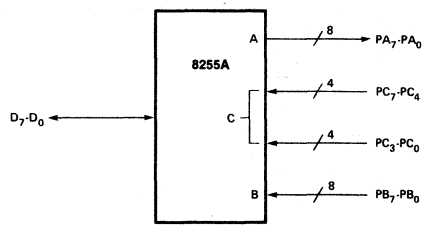

CONTROL WORD #11

D_7	D_6	D_5	D_4	D_3	D_2	D_1	D_0
1	0	0	1	0	0	1	1

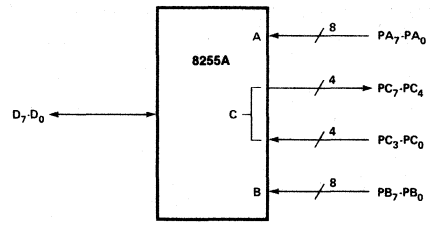

CONTROL WORD #12

D_7	D_6	D_5	D_4	D_3	D_2	D_1	D_0
1	0	0	1	1	0	0	0

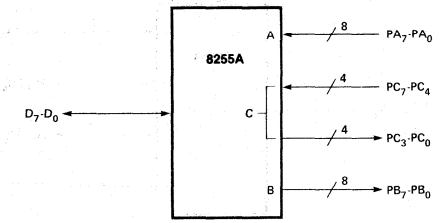

CONTROL WORD #14

D_7	D_6	D_5	D_4	D_3	D_2	D_1	D_0
1	0	0	1	1	0	1	0

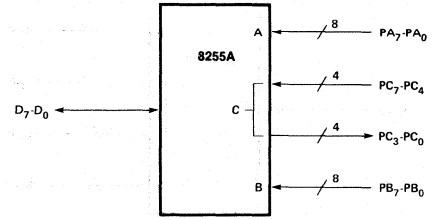

CONTROL WORD #13

D_7	D_6	D_5	D_4	D_3	D_2	D_1	D_0
1	0	0	1	1	0	0	1

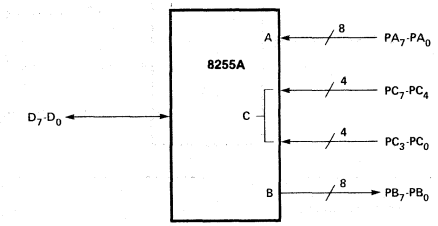

CONTROL WORD #15

D_7	D_6	D_5	D_4	D_3	D_2	D_1	D_0
1	0	0	1	1	0	1	1

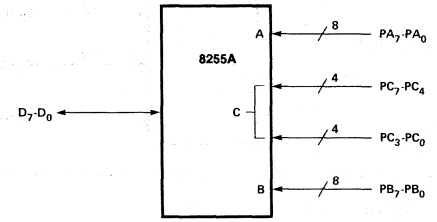

Operating Modes

MODE 1 (Strobed Input/Output). This functional configuration provides a means for transferring I/O data to or from a specified port in conjunction with strobes or "handshaking" signals. In mode 1, port A and Port B use the lines on port C to generate or accept these "handshaking" signals.

Mode 1 Basic Functional Definitions:

- Two Groups (Group A and Group B)
- Each group contains one 8-bit data port and one 4-bit control/data port.
- The 8-bit data port can be either input or output. Both inputs and outputs are latched.
- The 4-bit port is used for control and status of the 8-bit data port.

Input Control Signal Definition

STB (Strobe Input). A "low" on this input loads data into the input latch.

IBF (Input Buffer Full F/F)

A "high" on this output indicates that the data has been loaded into the input latch; in essence, an acknowledgement. IBF is set by STB input being low and is reset by the rising edge of the RD input.

INTR (Interrupt Request)

A "high" on this output can be used to interrupt the CPU when an input device is requesting service. INTR is set by the $\overline{STB}$ is a "one", IBF is a "one" and INTE is a "one". It is reset by the falling edge of $\overline{RD}$. This procedure allows an input device to request service from the CPU by simply strobing its data into the port.

INTE A

Controlled by bit set/reset of PC_4.

INTE B

Controlled by bit set/reset of PC_2.

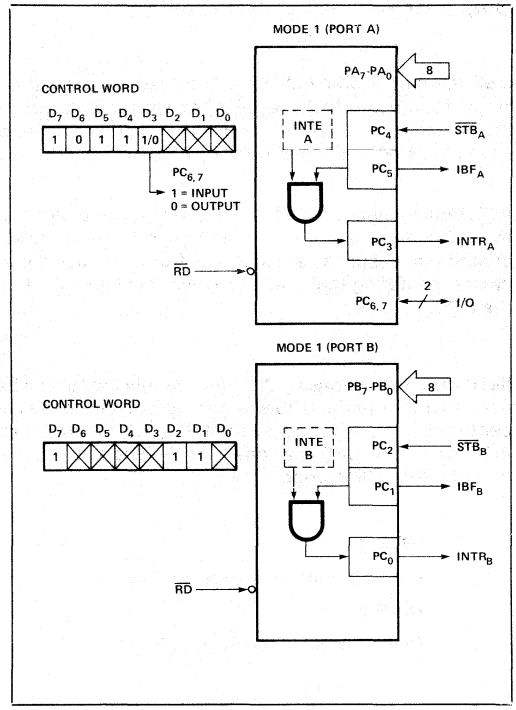

Figure 8. MODE 1 Input

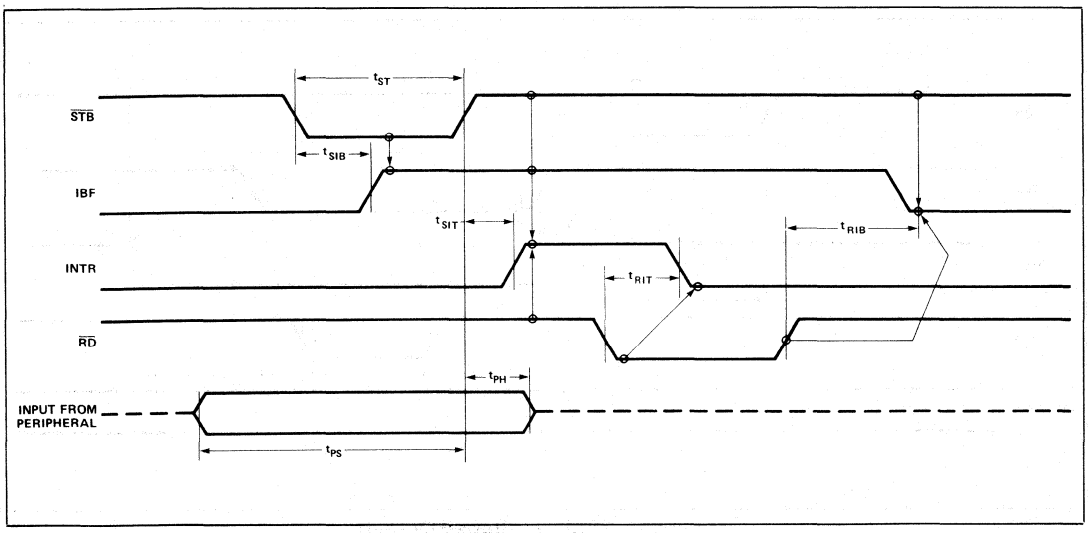

Figure 9. MODE 1 (Strobed Input)

Output Control Signal Definition

$\overline{OBF}$ (Output Buffer Full F/F). The OBF output will go "low" to indicate that the CPU has written data out to the specified port. The OBF F/F will be set by the rising edge of the WR input and reset by ACK Input being low.

$\overline{ACK}$ (Acknowledge Input). A "low" on this input informs the 8255A that the data from port A or port B has been accepted. In essence, a response from the peripheral device indicating that it has received the data output by the CPU.

INTR (Interrupt Request). A "high" on this output can be used to interrupt the CPU when an output device has accepted data transmitted by the CPU. INTR is set when ACK is a "one", OBF is a "one" and INTE is a "one". It is reset by the falling edge of WR.

INTE A

Controlled by bit set/reset of PC_6.

INTE B

Controlled by bit set/reset of PC_2.

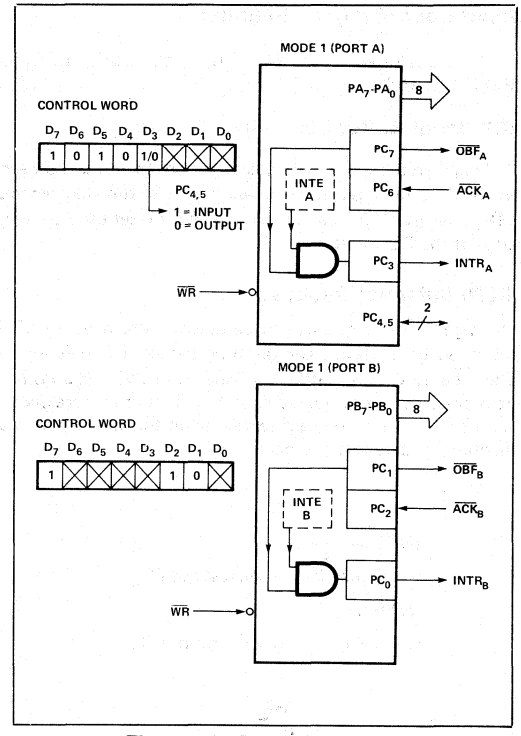

Figure 10. MODE 1 Output

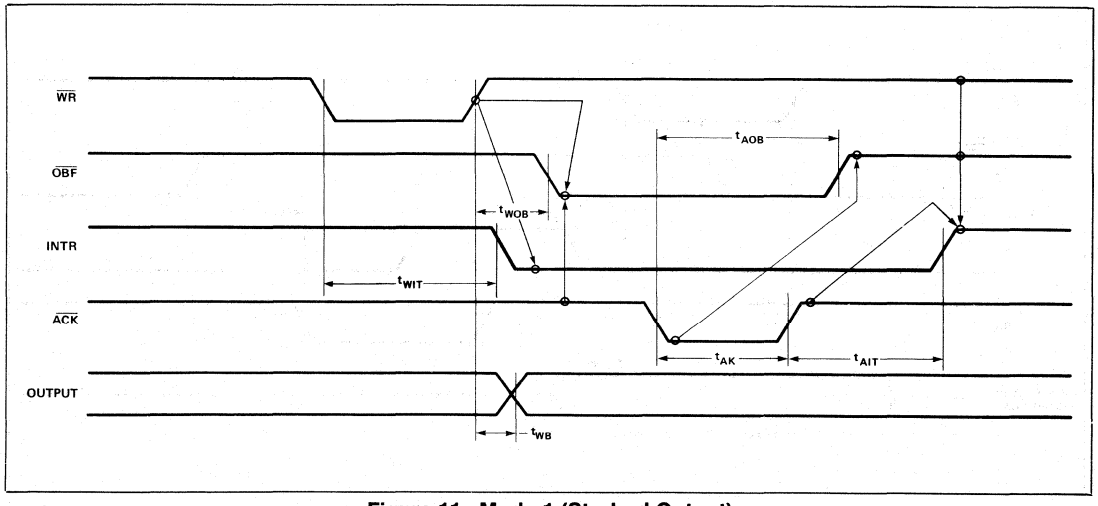

Figure 11. Mode 1 (Strobed Output)

Combinations of MODE 1

Port A and Port B can be individually defined as input or output in Mode 1 to support a wide variety of strobed I/O applications.

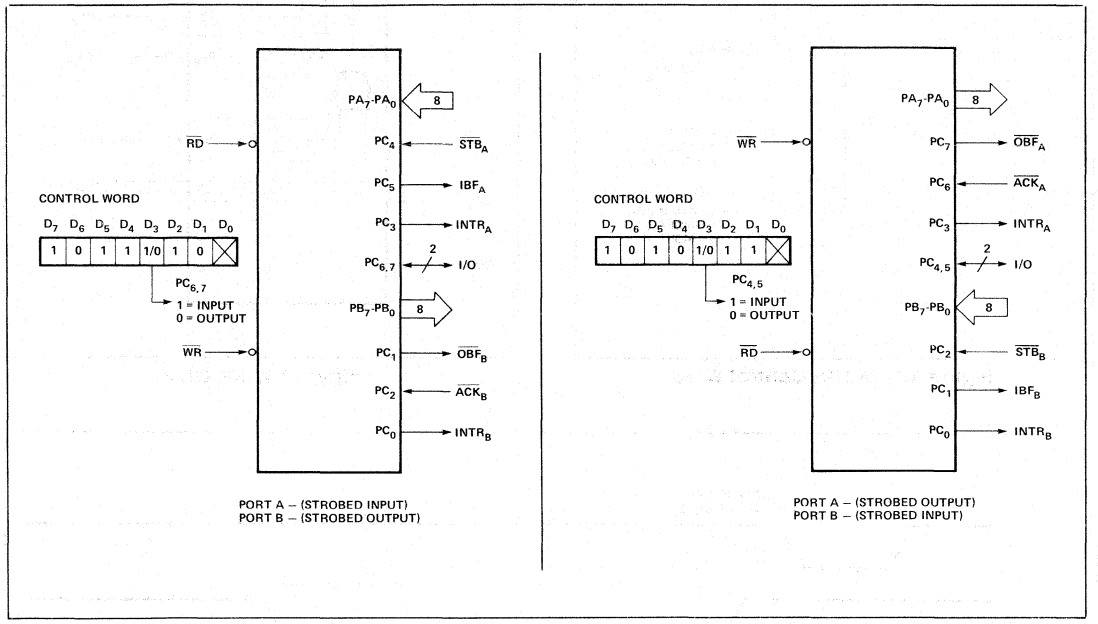

Figure 12. Combinations of MODE 1

Operating Modes

MODE 2 (Strobed Bidirectional Bus I/O). This functional configuration provides a means for communicating with a peripheral device or structure on a single 8-bit bus for both transmitting and receiving data (bidirectional bus I/O). "Handshaking" signals are provided to maintain proper bus flow discipline in a similar manner to MODE 1. Interrupt generation and enable/disable functions are also available.

MODE 2 Basic Functional Definitions:

- Used in Group A only.
- One 8-bit, bi-directional bus Port (Port A) and a 5-bit control Port (Port C).
- Both inputs and outputs are latched.
- The 5-bit control port (Port C) is used for control and status for the 8-bit, bi-directional bus port (Port A).

Bidirectional Bus I/O Control Signal Definition

INTR (Interrupt Request). A high on this output can be used to interrupt the CPU for both input or output operations.

Output Operations

$\overline{OBF}$ (Output Buffer Ful). The OBF output will go "low" to indicate that the CPU has written data out to port A.

$\overline{ACK}$ (Acknowledge). A "low" on this input enables the tri-state output buffer of port A to send out the data. Otherwise, the output buffer will be in the high impedance state.

INTE 1 (The INTE Flip-Flop Associated with OBF). Controlled by bit set/reset of PC_6.

Input Operations

$\overline{STB}$ (Strobe Input)

STB (Strobe Input). A "low" on this input loads data into the input latch.

IBF (Input Buffer Full F/F). A "high" on this output indicates that data has been loaded into the input latch.

INTE 2 (The INTE Flip-Flop Associated with IBF). Controlled by bit set/reset of PC_4.

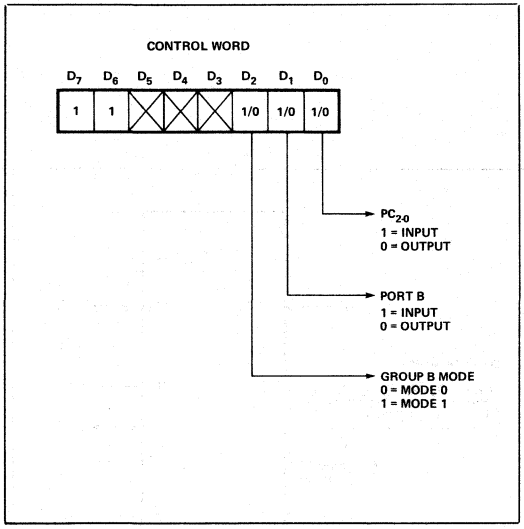

Figure 13. MODE Control Word

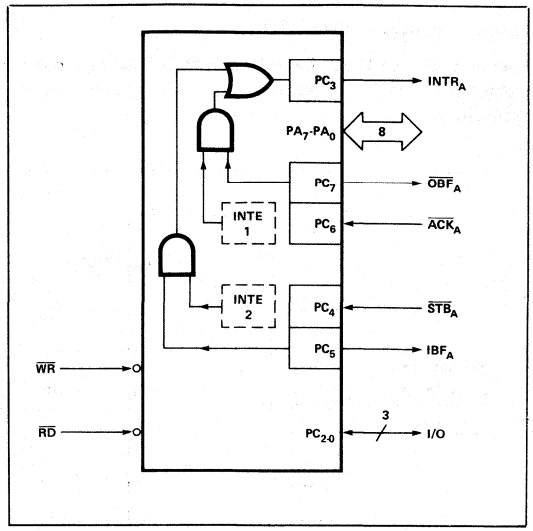

Figure 14. MODE 2

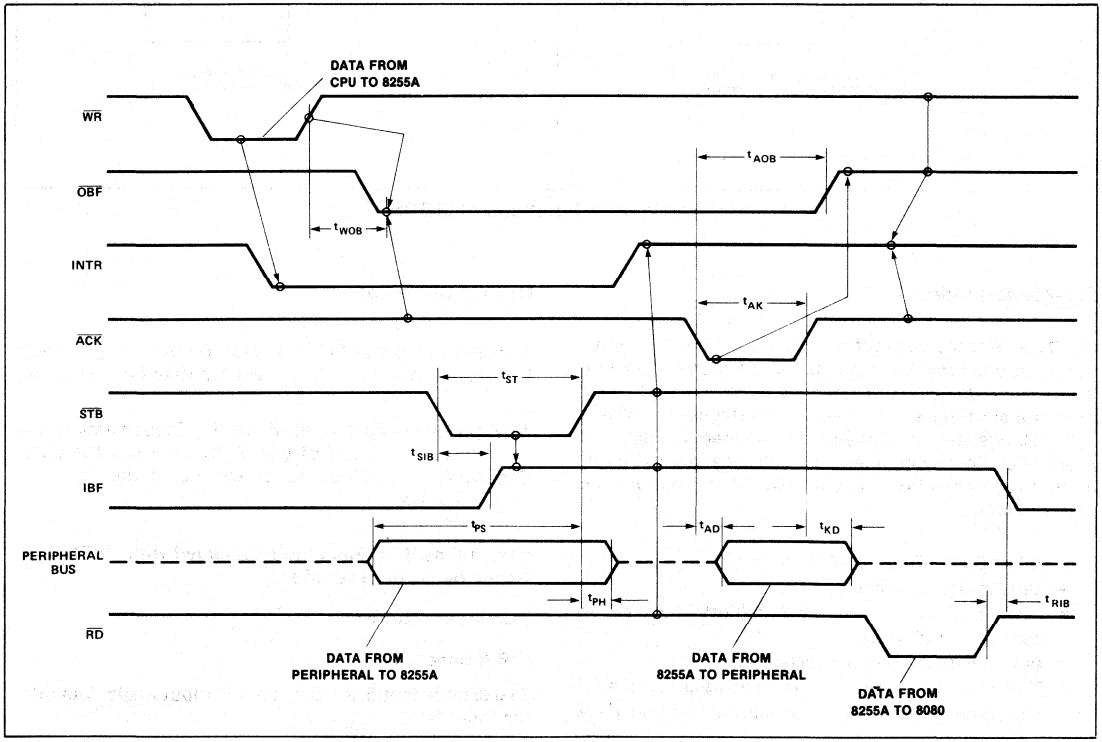

Figure 15. MODE 2 (Bidirectional)

NOTE: Any sequence where $\overline{WR}$ occurs before $\overline{ACK}$ and $\overline{STB}$ occurs before $\overline{RD}$ is permissible.
($INTR = IBF \cdot \overline{MASK} \cdot \overline{STB} \cdot \overline{RD} + \overline{OBF} \cdot \overline{MASK} \cdot \overline{ACK} \cdot \overline{WR}$)

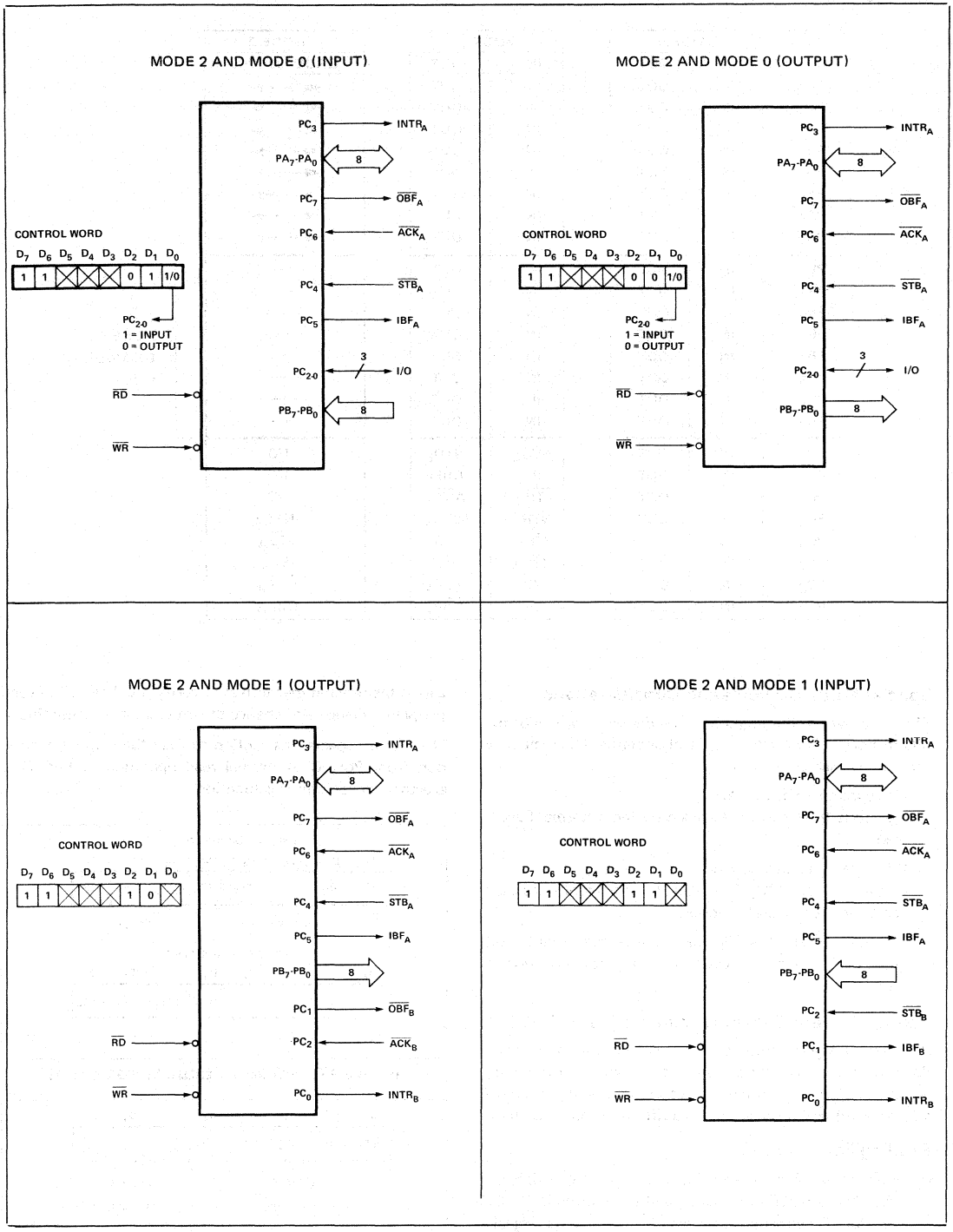

Figure 16. MODE ¼ Combinations

Mode Definition Summary

	MODE 0		MODE 1		MODE 2	
	IN	OUT	IN	OUT	GROUP A ONLY	
PA_0	IN	OUT	IN	OUT	↔	
PA_1	IN	OUT	IN	OUT	↔	
PA_2	IN	OUT	IN	OUT	↔	
PA_3	IN	OUT	IN	OUT	↔	
PA_4	IN	OUT	IN	OUT	↔	
PA_5	IN	OUT	IN	OUT	↔	
PA_6	IN	OUT	IN	OUT	↔	
PA_7	IN	OUT	IN	OUT	↔	
PB_0	IN	OUT	IN	OUT	—	MODE 0 OR MODE 1 ONLY
PB_1	IN	OUT	IN	OUT	—	
PB_2	IN	OUT	IN	OUT	—	
PB_3	IN	OUT	IN	OUT	—	
PB_4	IN	OUT	IN	OUT	—	
PB_5	IN	OUT	IN	OUT	—	
PB_6	IN	OUT	IN	OUT	—	
PB_7	IN	OUT	IN	OUT	—	
PC_0	IN	OUT	$INTR_B$	$INTR_B$	I/O	
PC_1	IN	OUT	IBF_B	$\overline{OBF}_B$	I/O	
PC_2	IN	OUT	$\overline{STB}_B$	$\overline{ACK}_B$	I/O	
PC_3	IN	OUT	$INTR_A$	$INTR_A$	$INTR_A$	
PC_4	IN	OUT	$\overline{STB}_A$	I/O	$\overline{STB}_A$	
PC_5	IN	OUT	IBF_A	I/O	IBF_A	
PC_6	IN	OUT	I/O	$\overline{ACK}_A$	$\overline{ACK}_A$	
PC_7	IN	OUT	I/O	$\overline{OBF}_A$	$\overline{OBF}_A$	

Special Mode Combination Considerations

There are several combinations of modes when not all of the bits in Port C are used for control or status. The remaining bits can be used as follows:

If Programmed as Inputs –
All input lines can be accessed during a normal Port C read.

If Programmed as Outputs –
Bits in C upper (PC_7-PC_4) must be individually accessed using the bit set/reset function.

Bits in C lower (PC_3-PC_0) can be accessed using the bit set/reset function or accessed as a threesome by writing into Port C.

Source Current Capability on Port B and Port C

Any set of **eight** output buffers, selected randomly from Ports B and C can source 1mA at 1.5 volts. This feature allows the 8255 to directly drive Darlington type drivers and high-voltage displays that require such source current.

Reading Port C Status

In Mode 0, Port C transfers data to or from the peripheral device. When the 8255 is programmed to function in Modes 1 or 2, Port C generates or accepts "hand-shaking" signals with the peripheral device. Reading the contents of Port C allows the programmer to test or verify the "status" of each peripheral device and change the program flow accordingly.

There is no special instruction to read the status information from Port C. A normal read operation of Port C is executed to perform this function.

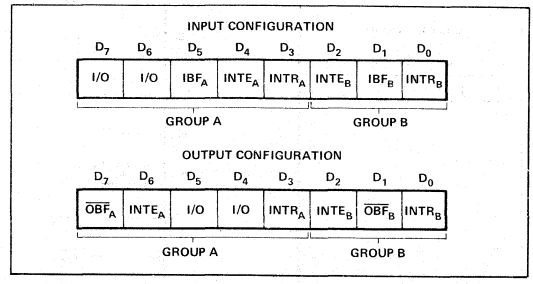

Figure 17. MODE 1 Status Word Format

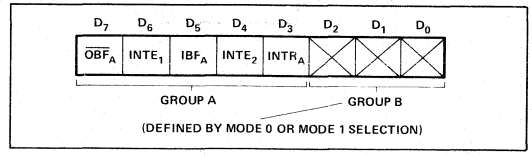

Figure 18. MODE 2 Status Word Format

APPLICATIONS OF THE 8255A

The 8255A is a very powerful tool for interfacing peripheral equipment to the microcomputer system. It represents the optimum use of available pins and is flexible enough to interface almost any I/O device without the need for additional external logic.

Each peripheral device in a microcomputer system usually has a "service routine" associated with it. The routine manages the software interface between the device and the CPU. The functional definition of the 8255A is programmed by the I/O service routine and becomes an extension of the system software. By examining the I/O devices interface characteristics for both data transfer and timing, and matching this information to the examples and tables in the detailed operational description, a control word can easily be developed to initialize the 8255A to exactly "fit" the application. Figures 19 through 25 present a few examples of typical applications of the 8255A.

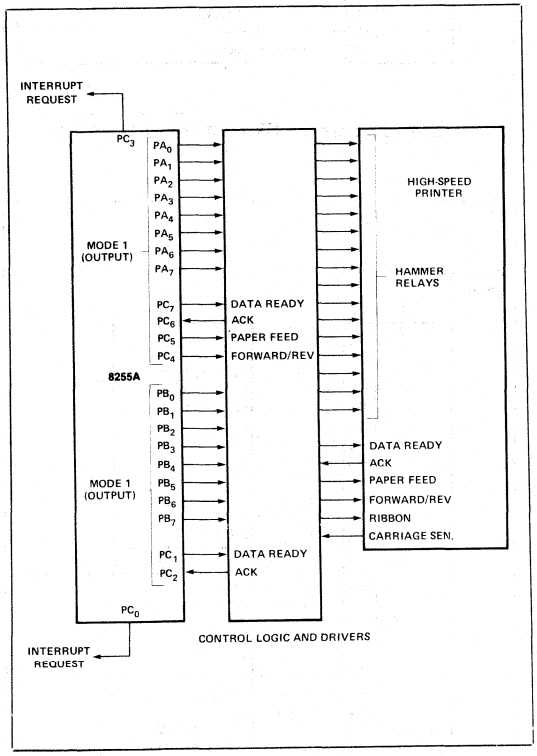

Figure 19. Printer Interface

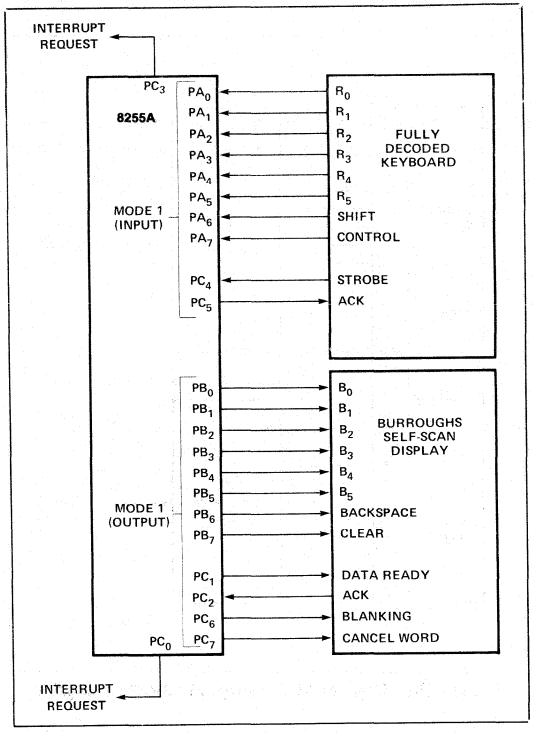

Figure 20. Keyboard and Display Interface

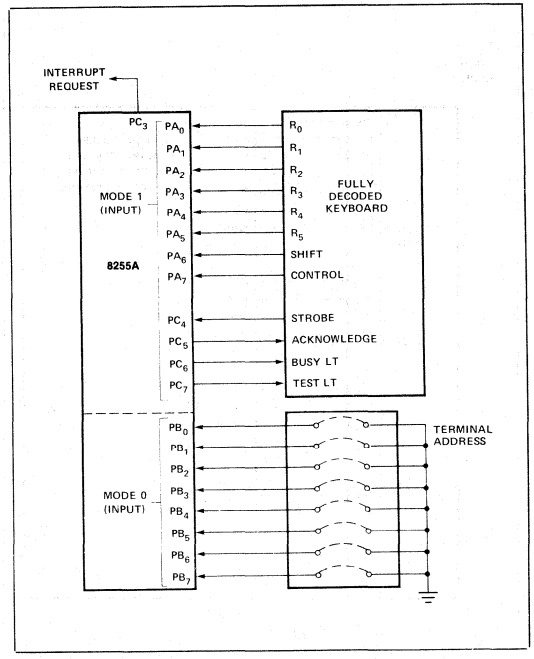

Figure 21. Keyboard and Terminal Address Interface

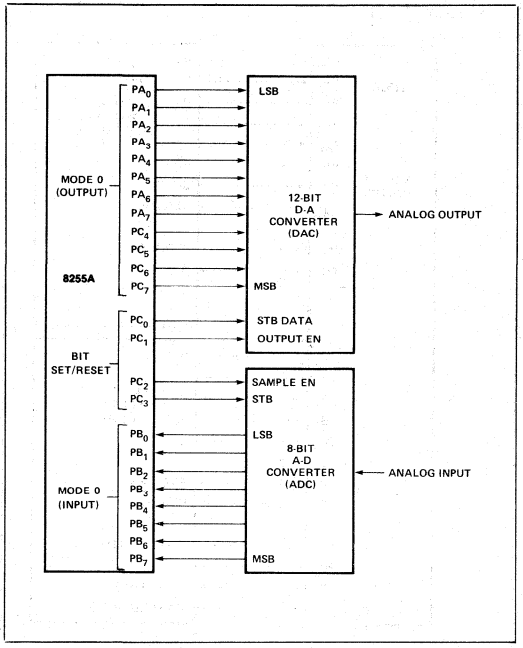

Figure 22. Digital to Analog, Analog to Digital

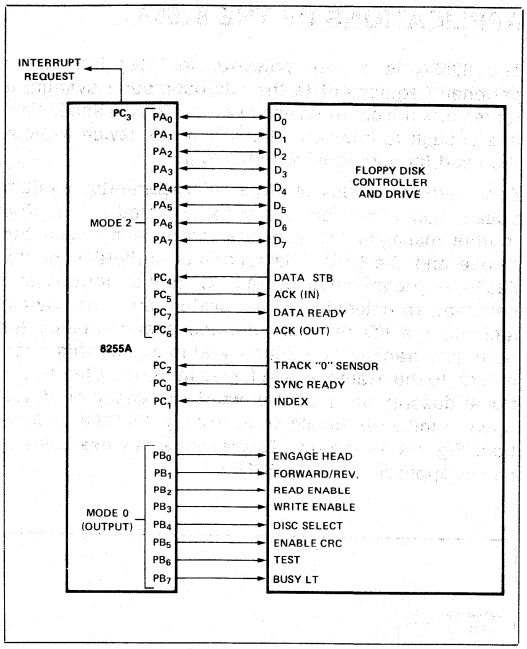

Figure 23. Basic CRT Controller Interface

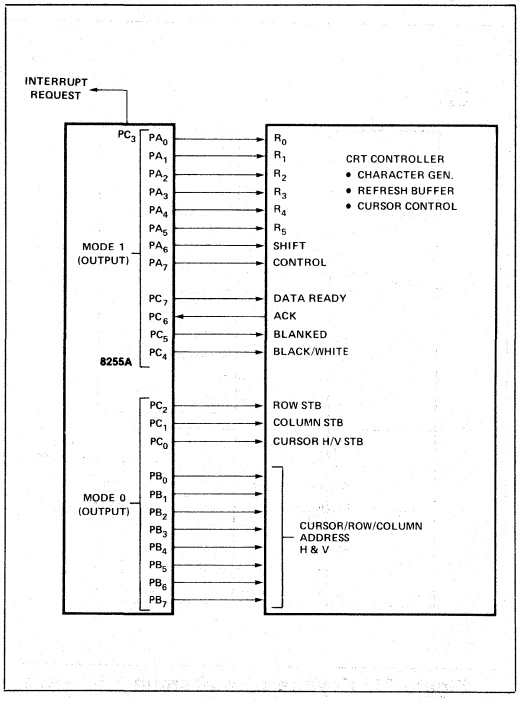

Figure 24. Basic Floppy Disc Interface

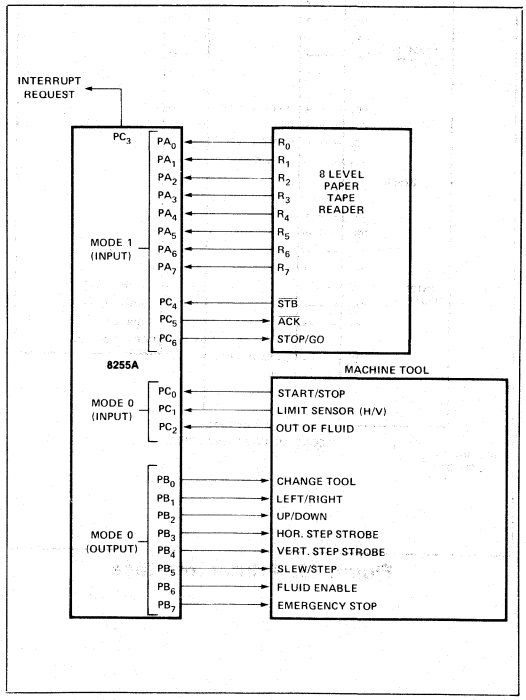

Figure 25. Machine Tool Controller Interface

ABSOLUTE MAXIMUM RATINGS*

Ambient Temperature Under Bias . . . . . 0°C to 70°C
Storage Temperature . . . . . −65°C to +150°C
Voltage on Any Pin
With Respect to Ground . . . . . −0.5V to +7V
Power Dissipation . . . . . 1 Watt

**NOTICE: Stresses above those listed under "Absolute Maximum Ratings" may cause permanent damage to the device. This is a stress rating only and functional operation of the device at these or any other conditions above those indicated in the operational sections of this specification is not implied. Exposure to absolute maximum rating conditions for extended periods may affect device reliability.*

D.C. CHARACTERISTICS (T_A = 0°C to 70°C, V_{CC} = +5V ± 5%, GND = 0V)

Symbol	Parameter	Min.	Max.	Unit	Test Conditions
V_{IL}	Input Low Voltage	-0.5	0.8	V	
V_{IH}	Input High Voltage	2.0	V_{CC}	V	
V_{OL} (DB)	Output Low Voltage (Data Bus)		0.45	V	I_{OL} = 2.5mA
V_{OL}(PER)	Output Low Voltage (Peripheral Port)		0.45	V	I_{OL} = 1.7mA
V_{OH}(DB)	Output High Voltage (Data Bus)	2.4		V	I_{OH} = -400μA
V_{OH}(PER)	Output High Voltage (Peripheral Port)	2.4		V	I_{OH} = -200μA
I_{DAR}[1]	Darlington Drive Current	-1.0	-4.0	mA	R_{EXT} = 750Ω; V_{EXT} = 1.5V
I_{CC}	Power Supply Current		120	mA	
I_{IL}	Input Load Current		±10	μA	V_{IN} = V_{CC} to 0V
I_{OFL}	Output Float Leakage		±10	μA	V_{OUT} = V_{CC} to .45V

NOTE:
1. Available on any 8 pins from Port B and C.

CAPACITANCE (T_A = 25°C, V_{CC} = GND = 0V)

Symbol	Parameter	Min.	Typ.	Max.	Unit	Test Conditions
C_{IN}	Input Capacitance			10	pF	fc = 1MHz
$C_{I/O}$	I/O Capacitance			20	pF	Unmeasured pins returned to GND

A.C. CHARACTERISTICS (T_A = 0°C to 70°C, V_{CC} = +5V ± 5%, GND = 0V)

Bus Parameters

READ

Symbol	Parameter	8255A		8255A-5		Unit
		Min.	Max.	Min.	Max.	
t_{AR}	Address Stable Before READ	0		0		ns
t_{RA}	Address Stable After READ	0		0		ns
t_{RR}	READ Pulse Width	300		300		ns
t_{RD}	Data Valid From READ[1]		250		200	ns
t_{DF}	Data Float After READ	10	150	10	100	ns
t_{RV}	Time Between READs and/or WRITEs	850		850		ns

A.C. CHARACTERISTICS (Continued)

WRITE

Symbol	Parameter	8255A		8255A-5		Unit
		Min.	Max.	Min.	Max.	
t_{AW}	Address Stable Before WRITE	0		0		ns
t_{WA}	Address Stable After WRITE	20		20		ns
t_{WW}	WRITE Pulse Width	400		300		ns
t_{DW}	Data Valid to WRITE (T.E.)	100		100		ns
t_{WD}	Data Valid After WRITE	30		30		ns

OTHER TIMINGS

Symbol	Parameter	8255A		8255A-5		Unit
		Min.	Max.	Min.	Max.	
t_{WB}	WR = 1 to Output[1]		350		350	ns
t_{IR}	Peripheral Data Before RD	0		0		ns
t_{HR}	Peripheral Data After RD	0		0		ns
t_{AK}	ACK Pulse Width	300		300		ns
t_{ST}	STB Pulse Width	500		500		ns
t_{PS}	Per. Data Before T.E. of STB	0		0		ns
t_{PH}	Per. Data After T.E. of STB	180		180		ns
t_{AD}	ACK = 0 to Output[1]		300		300	ns
t_{KD}	ACK = 1 to Output Float	20	250	20	250	ns
t_{WOB}	WR = 1 to OBF = 0[1]		650		650	ns
t_{AOB}	ACK = 0 to OBF = 1[1]		350		350	ns
t_{SIB}	STB = 0 to IBF = 1[1]		300		300	ns
t_{RIB}	RD = 1 to IBF = 0[1]		300		300	ns
t_{RIT}	RD = 0 to INTR = 0[1]		400		400	ns
t_{SIT}	STB = 1 to INTR = 1[1]		300		300	ns
t_{AIT}	ACK = 1 to INTR = 1[1]		350		350	ns
t_{WIT}	WR = 0 to INTR = 0[1,3]		450		450	ns

NOTES:
1. Test Conditions: C_L = 150 pF.
2. Period of Reset pulse must be at least 50μs during or after power on. Subsequent Reset pulse can be 500 ns min.
3. INTR↑ may occur as early as $\overline{WR}$↓.

A.C. TESTING INPUT, OUTPUT WAVEFORM

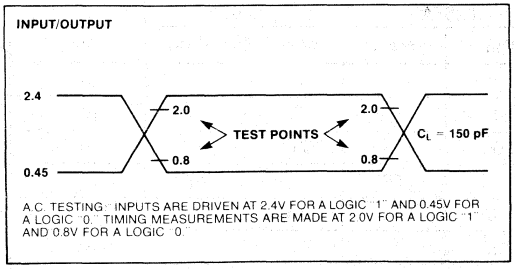

A.C. TESTING: INPUTS ARE DRIVEN AT 2.4V FOR A LOGIC "1" AND 0.45V FOR A LOGIC "0". TIMING MEASUREMENTS ARE MADE AT 2.0V FOR A LOGIC "1" AND 0.8V FOR A LOGIC "0".

A.C. TESTING LOAD CIRCUIT

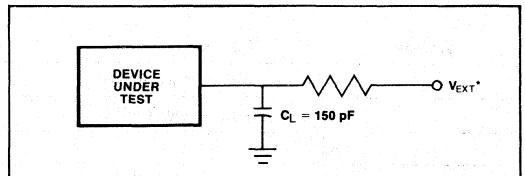

*V_{EXT} IS SET AT VARIOUS VOLTAGES DURING TESTING TO GUARANTEE THE SPECIFICATION.

WAVEFORMS

MODE 0 (BASIC INPUT)

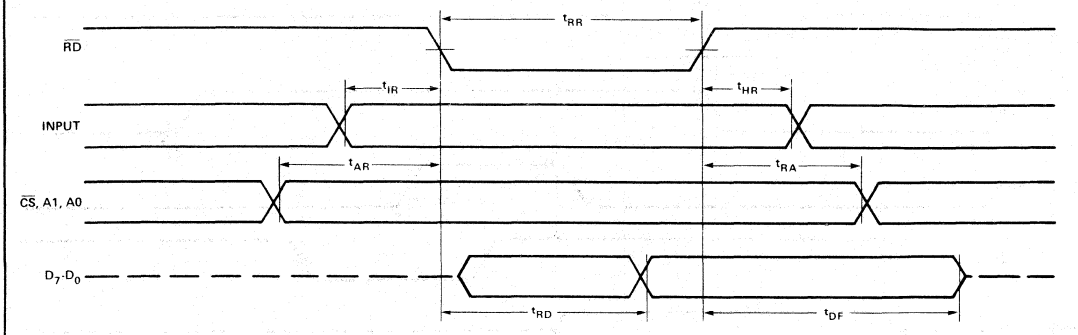

MODE 0 (BASIC OUTPUT)

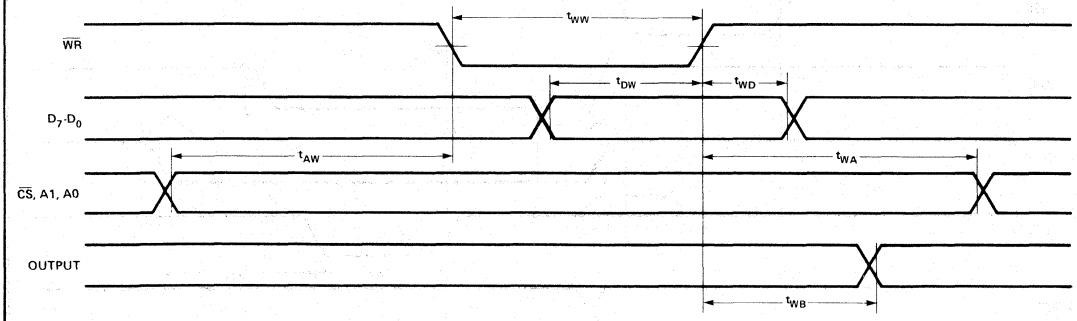

WAVEFORMS (Continued)

MODE 1 (STROBED INPUT)

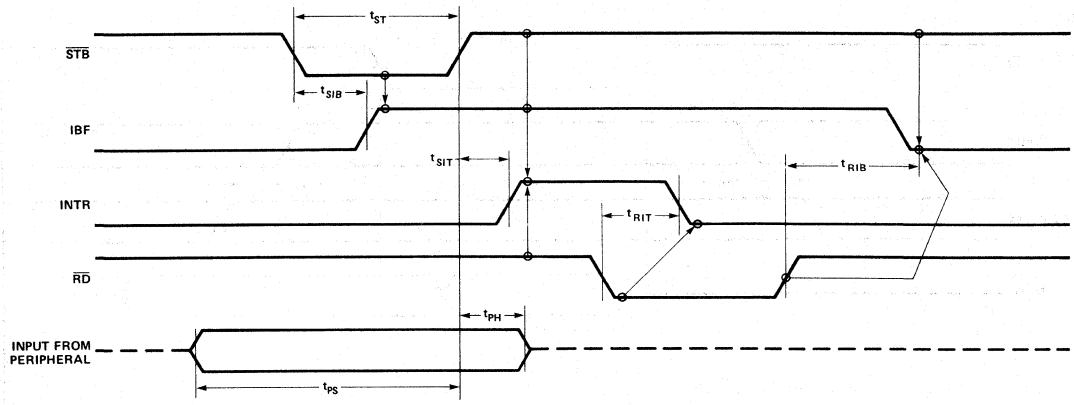

MODE 1 (STROBED OUTPUT)

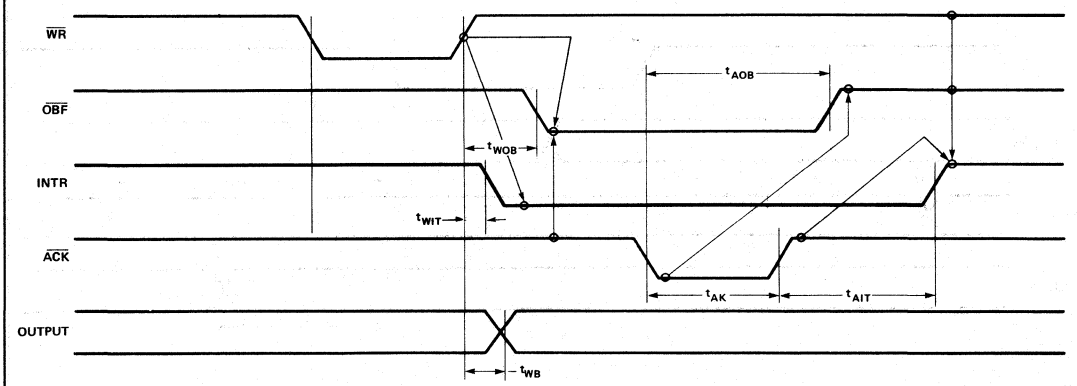

WAVEFORMS (Continued)

MODE 2 (BIDIRECTIONAL)

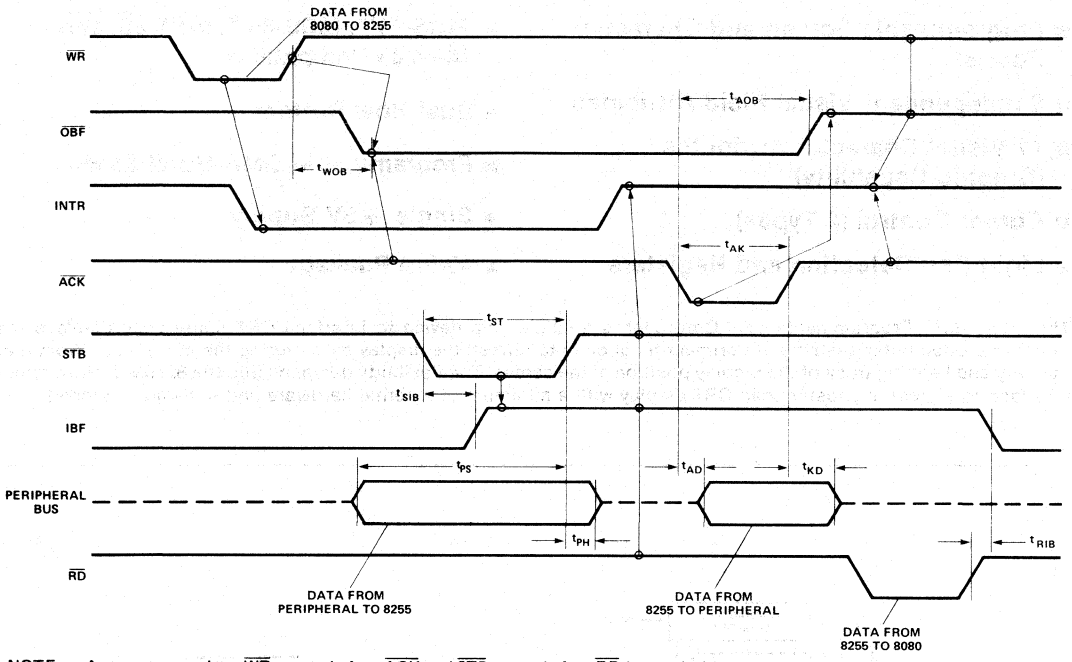

NOTE: Any sequence where $\overline{WR}$ occurs before $\overline{ACK}$ and $\overline{STB}$ occurs before $\overline{RD}$ is permissible.
($INTR = IBF \cdot \overline{MASK} \cdot \overline{STB} \cdot \overline{RD} + \overline{OBF} \cdot \overline{MASK} \cdot \overline{ACK} \cdot \overline{WR}$)

WRITE TIMING

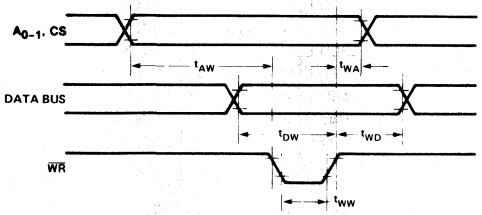

READ TIMING

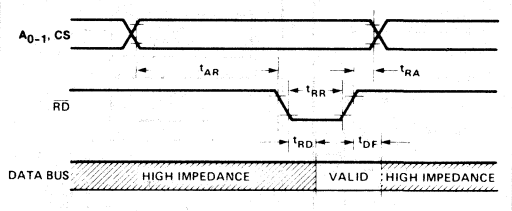

AFN-00744B

8275
PROGRAMMABLE CRT CONTROLLER

- **Programmable Screen and Character Format**
- **6 Independent Visual Field Attributes**
- **11 Visual Character Attributes (Graphic Capability)**
- **Cursor Control (4 Types)**
- **Light Pen Detection and Registers**
- **MCS-51™, MCS-85™, iAPX 86, and iAPX 88 Compatible**
- **Dual Row Buffers**
- **Programmable DMA Burst Mode**
- **Single +5V Supply**
- **40-Pin Package**

The Intel® 8275 Programmable CRT Controller is a single chip device to interface CRT raster scan displays with Intel® microcomputer systems. Its primary function is to refresh the display by buffering the information from main memory and keeping track of the display position of the screen. The flexibility designed into the 8275 will allow simple interface to almost any raster scan CRT display with a minimum of external hardware and software overhead.

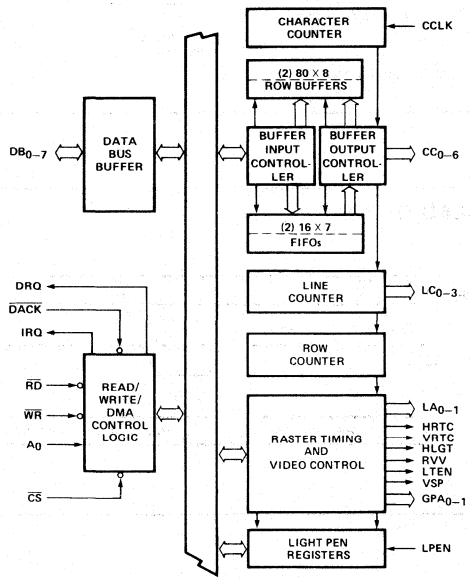

Figure 1. Block Diagram

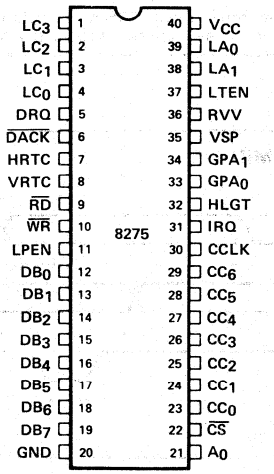

Figure 2. Pin Configuration

Table 1. Pin Descriptions

Symbol	Pin No.	Type	Name and Function
LC_3 LC_2 LC_1 LC_0	1 2 3 4	O	**Line Count:** Output from the line counter which is used to address the character generator for the line positions on the screen.
DRQ	5	O	**DMA Request:** Output signal to the 8257 DMA controller requesting a DMA cycle.
$\overline{DACK}$	6	I	**DMA Acknowledge:** Input signal from the 8257 DMA controller acknowledging that the requested DMA cycle has been granted.
HRTC	7	O	**Horizontal Retrace:** Output signal which is active during the programmed horizontal retrace interval. During this period the VSP output is high and the LTEN output is low.
VRTC	8	O	**Vertical Retrace:** Output signal which is active during the programmed vertical retrace interval. During this period the VSP output is high and the LTEN output is low.
$\overline{RD}$	9	I	**Read Input:** A control signal to read registers.
$\overline{WR}$	10	I	**Write Input:** A control signal to write commands into the control registers or write data into the row buffers during a DMA cycle.
LPEN	11	I	**Light Pen:** Input signal from the CRT system signifying that a light pen signal has been detected.
DB_0 DB_1 DB_2 DB_3 DB_4 DB_5 DB_6 DB_7	12 13 14 15 16 17 18 19	I/O	**Bi-Directional Three-State Data Bus Lines:** The outputs are enabled during a read of the C or P ports.
Ground	20		**Ground.**
V_{CC}	40		**+5V Power Supply.**
LA_0 LA_1	39 38	O	**Line Attribute Codes:** These attribute codes have to be decoded externally by the dot/timing logic to generate the horizontal and vertical line combinations for the graphic displays specified by the character attribute codes.
LTEN	37	O	**Light Enable:** Output signal used to enable the video signal to the CRT. This output is active at the programmed underline cursor position, and at positions specified by attribute codes.
RVV	36	O	**Reverse Video:** Output signal used to indicate the CRT circuitry to reverse the video signal. This output is active at the cursor position if a reverse video block cursor is programmed or at the positions specified by the field attribute codes.
VSP	35	O	**Video Suppression:** Output signal used to blank the video signal to the CRT. This output is active: —during the horizontal and vertical retrace intervals. —at the top and bottom lines of rows if underline is programmed to be number 8 or greater. —when an end of row or end of screen code is detected. —when a DMA underrun occurs. —at regular intervals (1/16 frame frequency for cursor, 1/32 frame frequency for character and field attributes)—to create blinking displays as specified by cursor, character attribute, or field attribute programming.
GPA_1 GPA_0	34 33	O	**General Purpose Attribute Codes:** Outputs which are enabled by the general purpose field attribute codes.
HLGT	32	O	**Highlight:** Output signal used to intensify the display at particular positions on the screen as specified by the character attribute codes or field attribute codes.
IRQ	31	O	**Interrupt Request.**
CCLK	30	I	**Character Clock (from dot/timing logic).**
CC_6 CC_5 CC_4 CC_3 CC_2 CC_1 CC_0	29 28 27 26 25 24 23	O	**Character Codes:** Output from the row buffers used for character selection in the character generator.
CS	22	I	**Chip Select:** The read and write are enabled by CS.
A_0	21	I	**Port Address:** A high input on A_0 selects the "C" port or command registers and a low input selects the "P" port or parameter registers.

FUNCTIONAL DESCRIPTION

Data Bus Buffer

This 3-state, bidirectional, 8-bit buffer is used to interface the 8275 to the system Data Bus.

This functional block accepts inputs from the System Control Bus and generates control signals for overall device operation. It contains the Command, Parameter, and Status Registers that store the various control formats for the device functional definition.

A_0	OPERATION	REGISTER
0	Read	PREG
0	Write	PREG
1	Read	SREG
1	Write	CREG

$\overline{RD}$ (Read)

A "low" on this input informs the 8275 that the CPU is reading data or status information from the 8275.

$\overline{WR}$ (Write)

A "low" on this input informs the 8275 that the CPU is writing data or control words to the 8275.

$\overline{CS}$ (Chip Select)

A "low" on this input selects the 8275. No reading or writing will occur unless the device is selected. When $\overline{CS}$ is high, the Data Bus in the float state and $\overline{RD}$ and $\overline{WR}$ will have no effect on the chip.

DRQ (DMA Request)

A "high" on this output informs the DMA Controller that the 8275 desires a DMA transfer.

$\overline{DACK}$ (DMA Acknowledge)

A "low" on this input informs the 8275 that a DMA cycle is in progress.

IRQ (Interrupt Request)

A "high" on this output informs the CPU that the 8275 desires interrupt service.

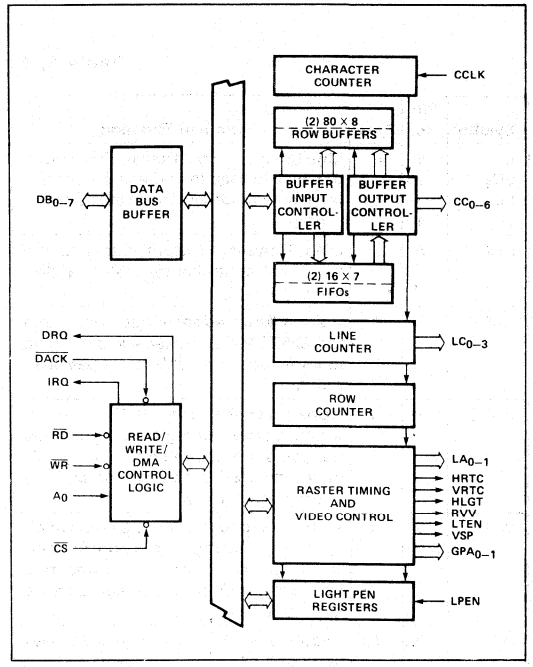

Figure 3. 8275 Block Diagram Showing Data Bus Buffer and Read/Write Functions

A_0	$\overline{RD}$	$\overline{WR}$	$\overline{CS}$	
0	0	1	0	Write 8275 Parameter
0	1	0	0	Read 8275 Parameter
1	0	1	0	Write 8275 Command
1	1	0	0	Read 8275 Status
X	1	1	0	Three-State
X	X	X	1	Three-state

Character Counter

The Character Counter is a programmable counter that is used to determine the number of characters to be displayed per row and the length of the horizontal retrace interval. It is driven by the CCLK (Character Clock) input, which should be a derivative of the external dot clock.

Line Counter

The Line Counter is a programmable counter that is used to determine the number of horizontal lines (Sweeps) per character row. Its outputs are used to address the external character generator ROM.

Row Counter

The Row Counter is a programmable counter that is used to determine the number of character rows to be displayed per frame and length of the vertical retrace interval.

Light Pen Registers

The Light Pen Registers are two registers that store the contents of the character counter and the row counter whenever there is a rising edge on the LPEN (Light Pen) input.

Note: Software correction is required.

Raster Timing and Video Controls

The Raster Timing circuitry controls the timing of the HRTC (Horizontal Retrace) and VRTC (Vertical Retrace) outputs. The Video Control circuitry controls the generation of LA_{0-1} (Line Attribute), HGLT (Highlight), RVV (Reverse Video), LTEN (Light Enable), VSP (Video Suppress), and GPA_{0-1} (General Purpose Attribute) outputs.

Row Buffers

The Row Buffers are two 80 character buffers. They are filled from the microcomputer system memory with the character codes to be displayed. While one row buffer is displaying a row of characters, the other is being filled with the next row of characters.

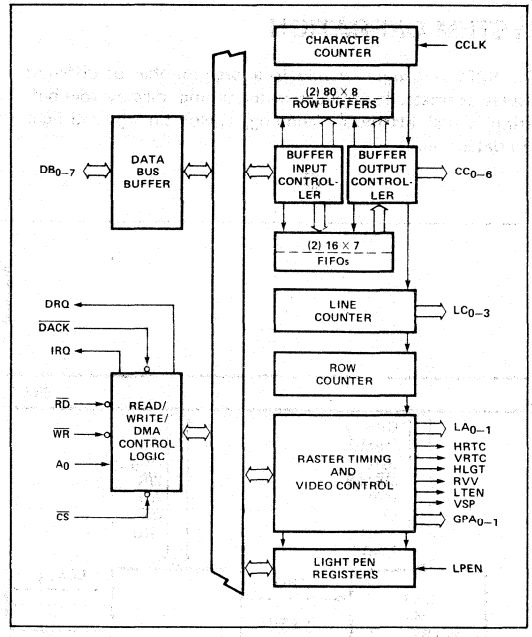

Figure 4. 8275 Block Diagram Showing Counter and Register Functions

FIFOs

There are two 16 character FIFOs in the 8275. They are used to provide extra row buffer length in the Transparent Attribute Mode (see Detailed Operation section).

Buffer Input/Output Controllers

The Buffer Input/Output Controllers decode the characters being placed in the row buffers. If the character is a character attribute, field attribute or special code, these controllers control the appropriate action. (Examples: An "End of Screen–Stop DMA" special code will cause the Buffer Input Controller to stop further DMA requests. A "Highlight" field attribute will cause the Buffer Output Controller to activate the HGLT output.)

SYSTEM OPERATION

The 8275 is programmable to a large number of different display formats. It provides raster timing, display row buffering, visual attribute decoding, cursor timing, and light pen detection.

It is designed to interface with the 8257 DMA Controller and standard character generator ROMs for dot matrix decoding. Dot level timing must be provided by external circuitry.

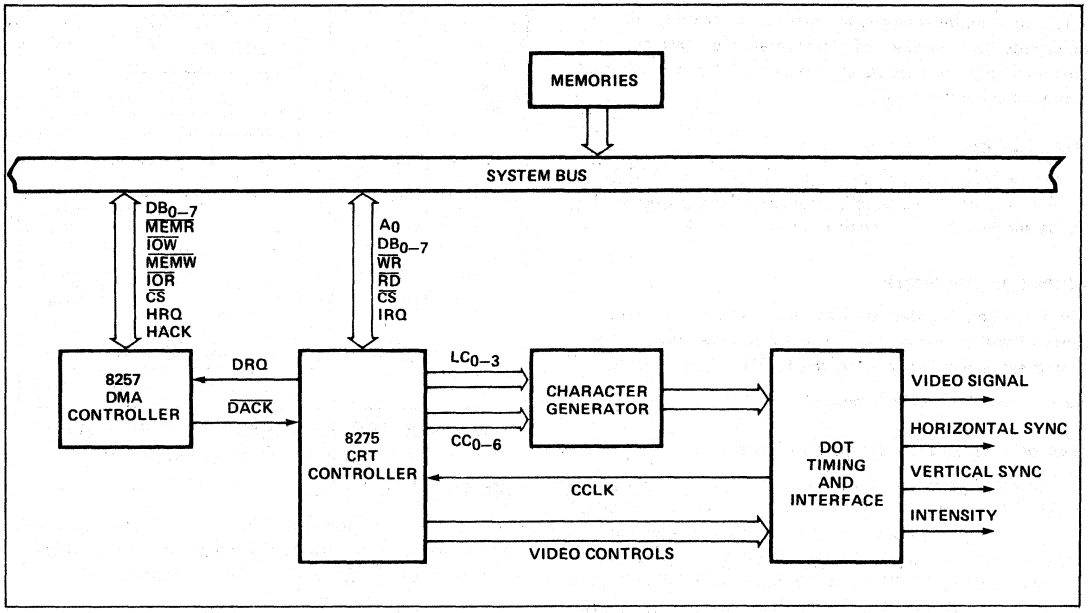

Figure 5. 8275 Systems Block Diagram Showing Systems Operation

General Systems Operational Description

The 8275 provides a "window" into the microcomputer system memory.

Display characters are retrieved from memory and displayed on a row by row basis. The 8275 has two row buffers. While one row buffer is being used for display, the other is being filled with the next row of characters to be displayed. The number of display characters per row and the number of character rows per frame are software programmable, providing easy interface to most CRT displays. (See Programming Section.)

The 8275 requests DMA to fill the row buffer that is not being used for display. DMA burst length and spacing is programmable. (See Programming Section.)

The 8275 displays character rows one line at a time.

The number of lines per character row, the underline position, and blanking of top and bottom lines are programmable. (See Programming Section.)

The 8275 provides special Control Codes which can be used to minimize DMA or software overhead. It also provides Visual Attribute Codes to cause special action or symbols on the screen without the use of the character generator (see Visual Attributes Section).

The 8275 also controls raster timing. This is done by generating Horizontal Retrace (HRTC) and Vertical Retrace (VRTC) signals. The timing of these signals is programmable.

The 8275 can generate a cursor. Cursor location and format are programmable. (See Programming Section.)

The 8275 has a light pen input and registers. The light pen input is used to load the registers. Light pen registers can be read on command. (See Programming Section.)

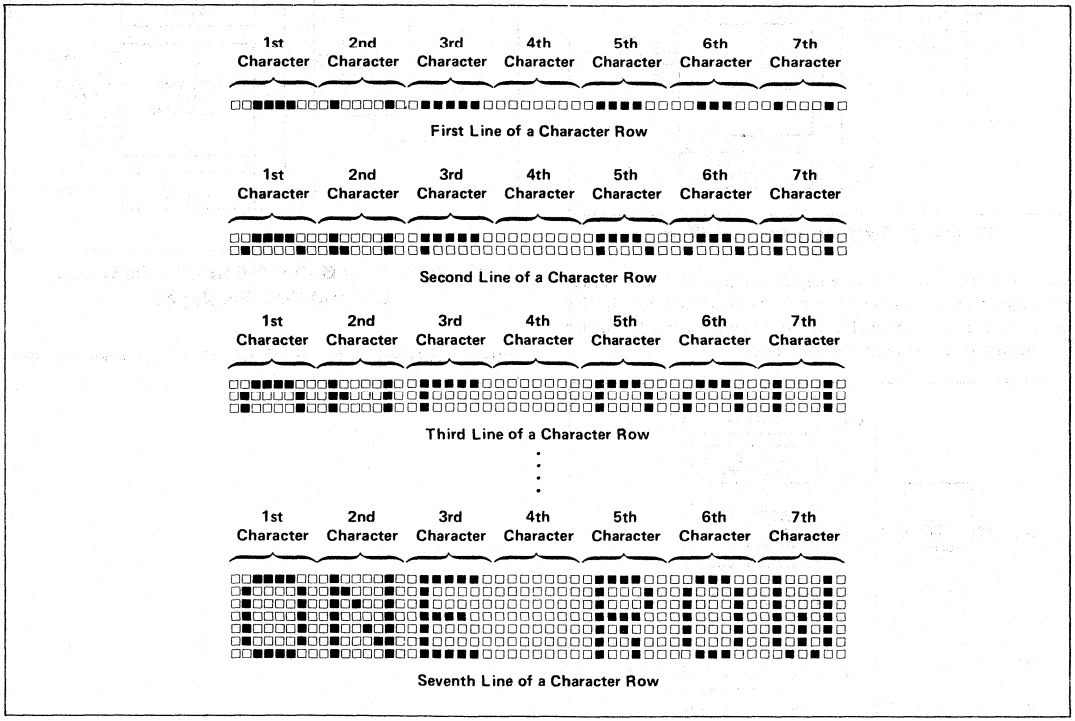

Figure 6. Display of a Character Row

Display Row Buffering

Before the start of a frame, the 8275 requests DMA and one row buffer is filled with characters.

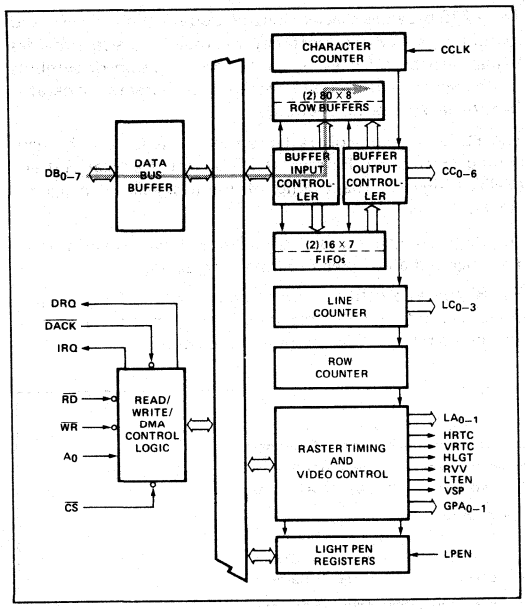

Figure 7. First Row Buffer Filled

When the first horizontal sweep is started, character codes are output to the character generator from the row buffer just filled. Simultaneously, DMA begins filling the other row buffer with the next row of characters.

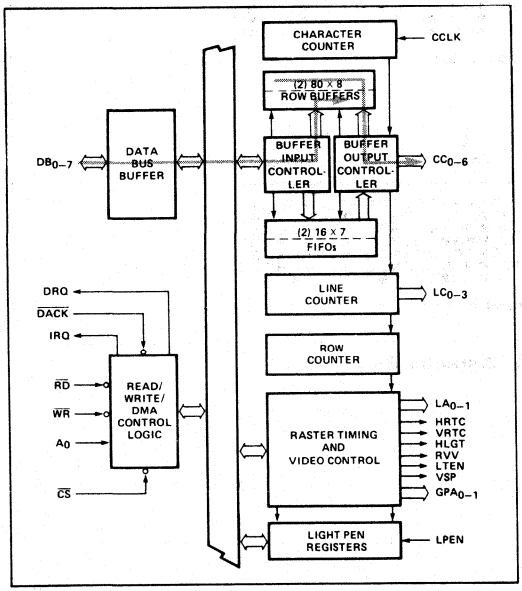

Figure 8. Second Buffer Filled, First Row Displayed

After all the lines of the character row are scanned, the roles of the two row buffers are reversed and the same procedure is followed for the next row.

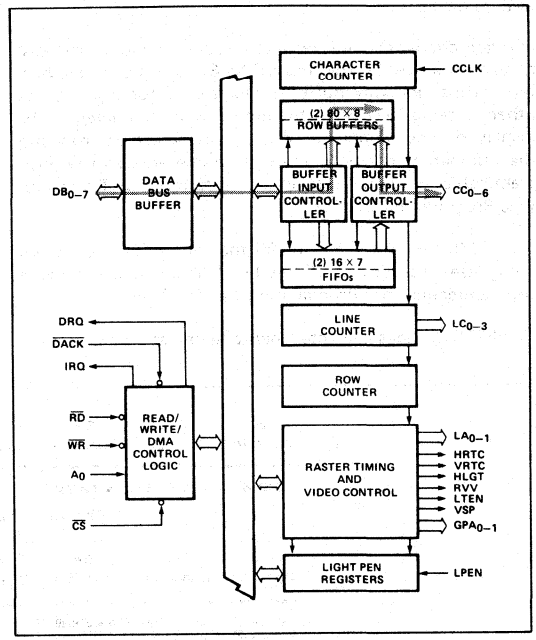

Figure 9. First Buffer Filled with Third Row, Second Row Displayed

This is repeated until all of the character rows are displayed.

Display Format

Screen Format

The 8275 can be programmed to generate from 1 to 80 characters per row, and from 1 to 64 rows per frame.

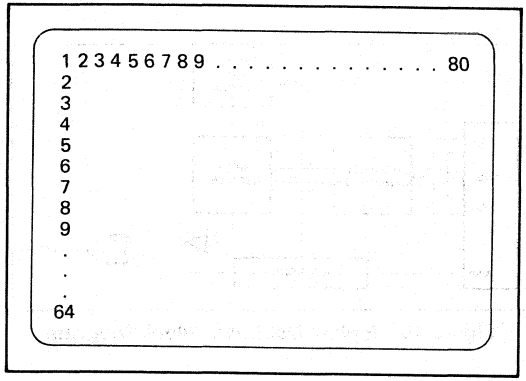

Figure 10. Screen Format

The 8275 can also be programmed to blank alternate rows. In this mode, the first row is displayed, the second blanked, the third displayed, etc. DMA is not requested for the blanked rows.

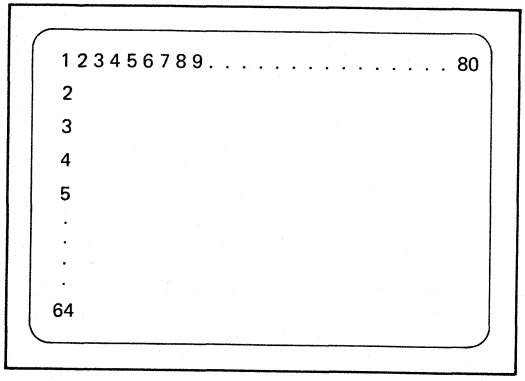

Figure 11. Blank Alternate Rows Mode

Row Format

The 8275 is designed to hold the line count stable while outputting the appropriate character codes during each horizontal sweep. The line count is incremented during horizontal retrace and the whole row of character codes are output again during the next sweep. This is continued until the whole character row is displayed.

The number of lines (horizontal sweeps) per character row is programmable from 1 to 16.

The output of the line counter can be programmed to be in one of two modes.

In mode 0, the output of the line *counter* is the same as the line *number*.

In mode 1, the line *counter* is offset by one from the line *number*.

Note: In mode 1, while the *first* line (line number 0) is being displayed, the *last* count is output by the line counter (see examples).

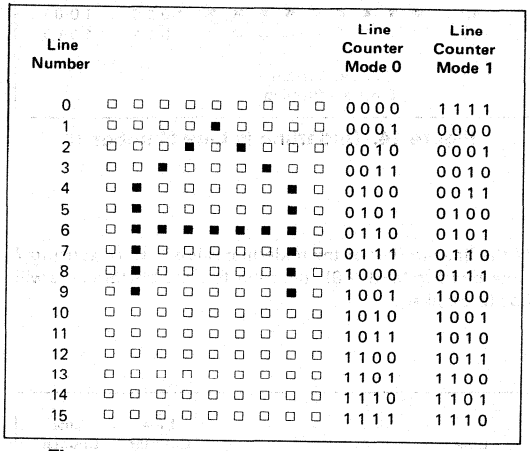

Figure 12. Example of a 16-Line Format

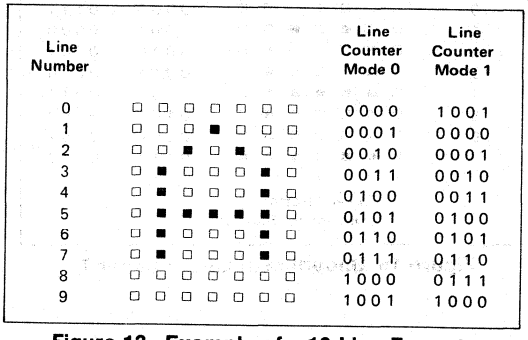

Figure 13. Example of a 10-Line Format

Mode 0 is useful for character generators that leave address zero blank and start at address 1. Mode 1 is useful for character generators which start at address zero.

Underline placement is also programmable (from line *number* 0 to 15). This is independent of the line *counter* mode.

If the line *number* of the underline is greater than 7 (line *number* MSB = 1), then the top and bottom lines will be blanked.

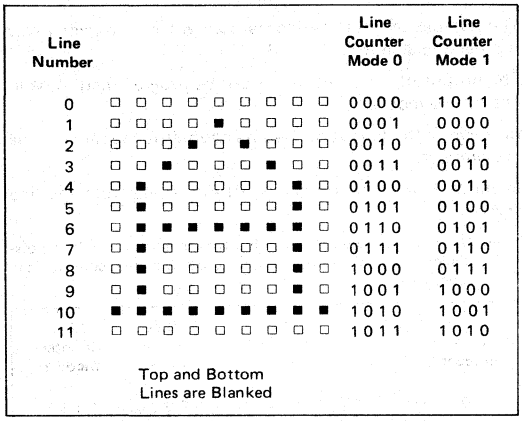

Figure 14. Underline in Line Number 10

If the line *number* of the underline is less than or equal to 7 (line *number* MSB = 0), then the top and bottom lines will *not* be blanked.

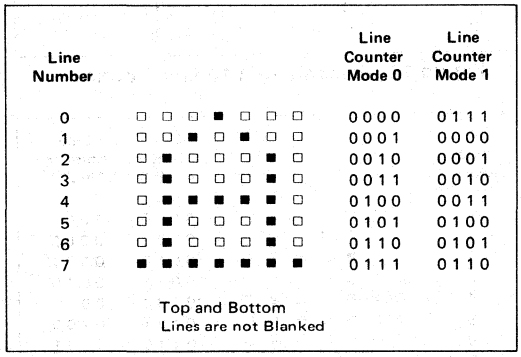

Figure 15. Underline in Line Number 7

If the line *number* of the underline is greater than the maximum number of lines, the underline will not appear.

Blanking is accomplished by the VSP (Video Suppression) signal. Underline is accomplished by the LTEN (Light Enable) signal.

Dot Format

Dot width and character width are dependent upon the external timing and control circuitry.

Dot level timing circuitry should be designed to accept the parallel output of the character generator and shift it out serially at the rate required by the CRT display.

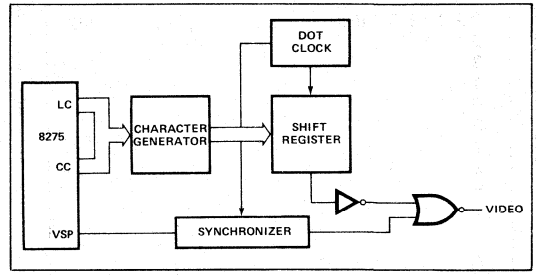

Figure 16. Typical Dot Level Block Diagram

Dot width is a function of dot clock frequency.

Character width is a function of the character generator width.

Horizontal character spacing is a function of the shift register length.

Note: Video control and timing signals must be synchronized with the video signal due to the character generator access delay.

Raster Timing

The character counter is driven by the character clock input (CCLK). It counts out the characters being displayed (programmable from 1 to 80). It then causes the line counter to increment, and it starts counting out the horizontal retrace interval (programmable from 2 to 32). This is constantly repeated.

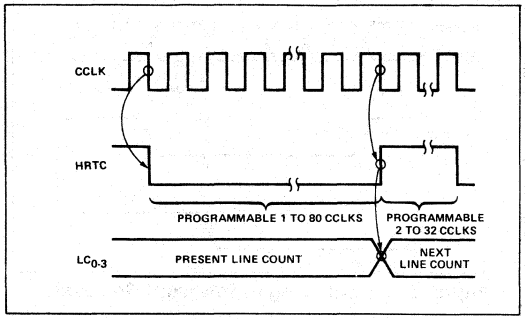

Figure 17. Line Timing

The line counter is driven by the character counter. It is used to generate the line address outputs (LC_{0-3}) for the character generator. After it counts all of the lines in a character row (programmable from 1 to 16), it increments the row counter, and starts over again. (See Character Format Section for detailed description of Line Counter functions.)

The row counter is an internal counter driven by the line counter. It controls the functions of the row buffers and counts the number of character rows displayed.

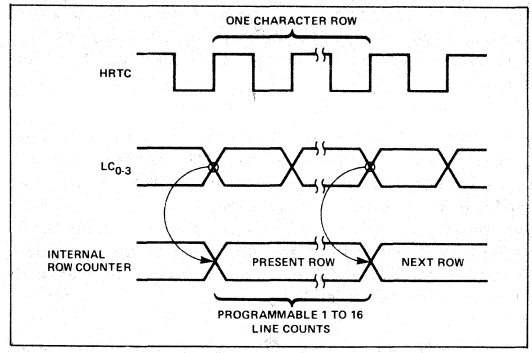

Figure 18. Row Timing

After the row counter counts all of the rows in a frame (programmable from 1 to 64), it starts counting out the vertical retrace interval (programmable from 1 to 4).

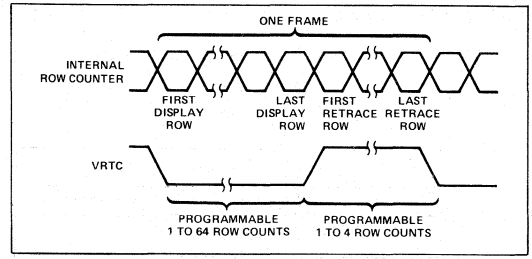

Figure 19. Frame Timing

The Video Suppression Output (VSP) is active during horizontal and vertical retrace intervals.

Dot level timing circuitry must synchronize these outputs with the video signal to the CRT Display.

DMA Timing

The 8275 can be programmed to request burst DMA transfers of 1 to 8 characters. The interval between bursts is also programmable (from 0 to 55 character clock periods ±1). This allows the user to tailor his DMA overhead to fit his system needs.

The first DMA request of the frame occurs one *row time* before the end of vertical retrace. DMA requests continue as programmed, until the row buffer is filled. If the row buffer is filled in the middle of a burst, the 8275 terminates the burst and resets the burst counter. No more DMA requests will occur until the *beginning* of the *next* row. At that time, DMA requests are activated as programmed until the other buffer is filled.

The first DMA request for a row will start at the first character clock of the preceding row. If the burst mode is used, the first DMA request may occur a number of character clocks later. This number is equal to the programmed burst space.

If, for any reason, there is a DMA underrun, a flag in the status word will be set.

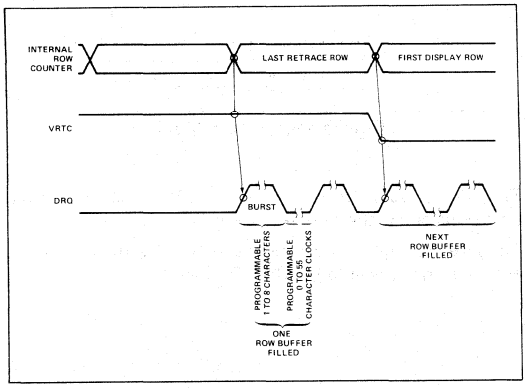

Figure 20. DMA Timing

The DMA controller is typically initialized for the next frame at the end of the current frame.

Interrupt Timing

The 8275 can be programmed to generate an interrupt request at the end of each frame. This can be used to reinitialize the DMA controller. If the 8275 interrupt enable flag is set, an interrupt request will occur at the *beginning* of the *last display row*.

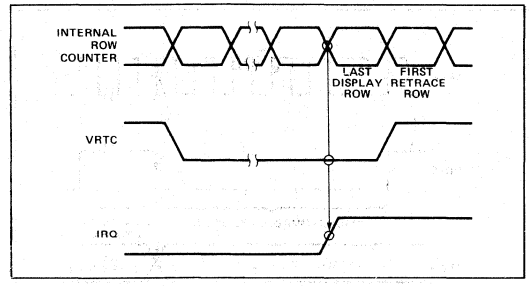

Figure 21. Beginning of Interrupt Request

IRQ will go inactive after the status register is read.

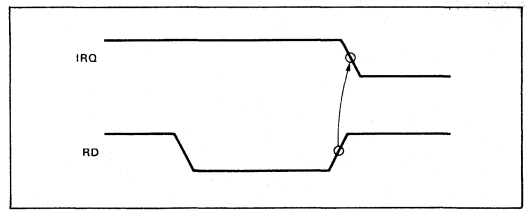

Figure 22. End of Interrupt Request

A reset command will also cause IRQ to go inactive, but this is not recommended during normal service.

Another method of reinitializing the DMA controller is to have the DMA controller itself interrupt on terminal count. With this method, the 8275 interrupt enable flag should not be set.

Note: Upon power-up, the 8275 Interrupt Enable Flag may be set. As a result, the user's cold start routine should write a reset command to the 8275 before system interrupts are enabled.

VISUAL ATTRIBUTES AND SPECIAL CODES

The characters processed by the 8275 are 8-bit quantities. The character code outputs provide the character generator with 7 bits of address. The Most Significant Bit is the extra bit and it is used to determine if it is a normal display character (MSB = 0), or if it is a Visual Attribute or Special Code (MSB = 1).

There are two types of Visual Attribute Codes. They are Character Attributes and Field Attributes.

Character Attribute Codes

Character attribute codes are codes that can be used to generate graphics symbols without the use of a character generator. This is accomplished by selectively activating the Line Attribute outputs (LA_{0-1}), the Video Suppression output (VSP), and the Light Enable output. The dot level timing circuitry can use these signals to generate the proper symbols.

Character attributes can be programmed to blink or be highlighted individually. Blinking is accomplished with the Video Suppression output (VSP). Blink frequency is equal to the screen refresh frequency divided by 32. Highlighting is accomplished by activating the Highlight output (HGLT).

Character Attributes

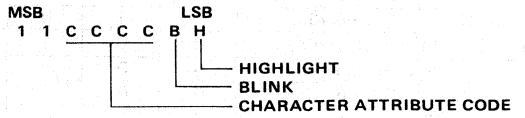

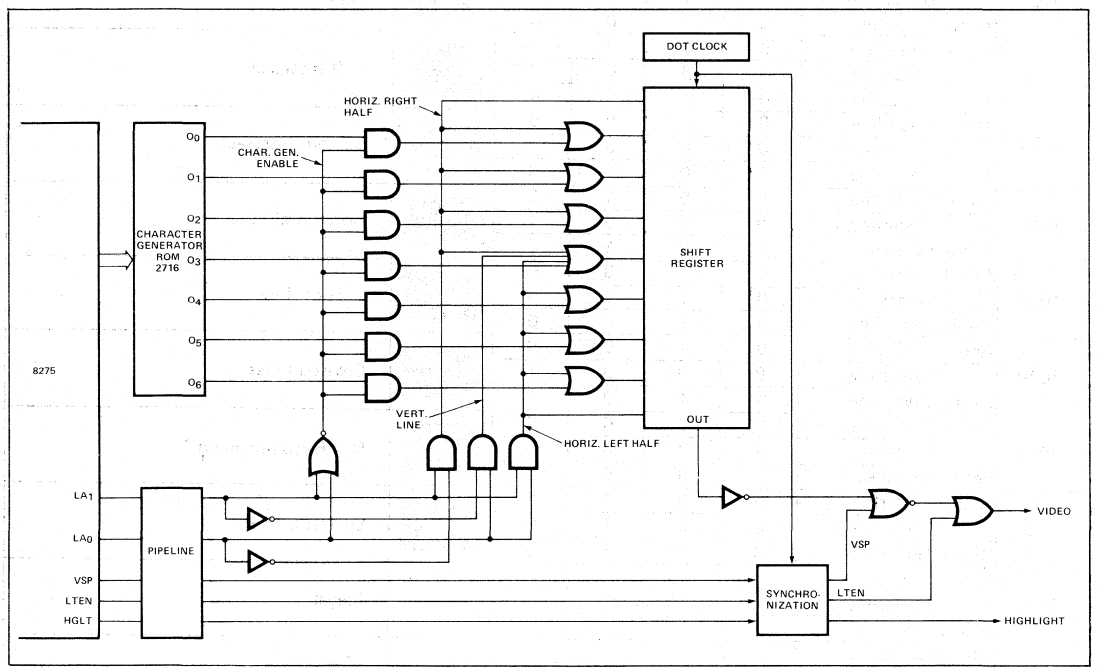

Figure 23. Typical Character Attribute Logic

Table 2. Character Attributes

Character attributes were designed to produce the following graphics:

CHARACTER ATTRIBUTE CODE "CCCC"		OUTPUTS LA_1	OUTPUTS LA_0	OUTPUTS VSP	OUTPUTS LTEN	SYMBOL	DESCRIPTION
0000	Above Underline	0	0	1	0		Top Left Corner
	Underline	1	0	0	0		
	Below Underline	0	1	0	0		
0001	Above Underline	0	0	1	0		Top Right Corner
	Underline	1	1	0	0		
	Below Underline	0	1	0	0		
0010	Above Underline	0	1	0	0		Bottom Left Corner
	Underline	1	0	0	0		
	Below Underline	0	0	1	0		
0011	Above Underline	0	1	0	0		Bottom Right Corner
	Underline	1	1	0	0		
	Below Underline	0	0	1	0		
0100	Above Underline	0	0	1	0		Top Intersect
	Underline	0	0	0	1		
	Below Underline	0	1	0	0		
0101	Above Underline	0	1	0	0		Right Intersect
	Underline	1	1	0	0		
	Below Underline	0	1	0	0		
0110	Above Underline	0	1	0	0		Left Intersect
	Underline	1	0	0	0		
	Below Underline	0	1	0	0		
0111	Above Underline	0	1	0	0		Bottom Intersect
	Underline	0	0	0	1		
	Below Underline	0	0	1	0		
1000	Above Underline	0	0	1	0		Horizontal Line
	Underline	0	0	0	1		
	Below Underline	0	0	1	0		
1001	Above Underline	0	1	0	0		Vertical Line
	Underline	0	1	0	0		
	Below Underline	0	1	0	0		
1010	Above Underline	0	1	0	0		Crossed Lines
	Underline	0	0	0	1		
	Below Underline	0	1	0	0		
1011	Above Underline	0	0	0	0		Not Recommended *
	Underline	0	0	0	0		
	Below Underline	0	0	0	0		
1100	Above Underline	0	0	1	0		Special Codes
	Underline	0	0	1	0		
	Below Underline	0	0	1	0		
1101	Above Underline						Illegal
	Underline		Undefined				
	Below Underline						
1110	Above Underline						Illegal
	Underline		Undefined				
	Below Underline						
1111	Above Underline						Illegal
	Underline		Undefined				
	Below Underline						

*Character Attribute Code 1011 is not recommended for normal operation. Since none of the attribute outputs are active, the character Generator will not be disabled, and an indeterminate character will be generated.

Character Attribute Codes 1101, 1110, and 1111 are illegal.

Blinking is active when B = 1.

Highlight is active when H = 1.

Special Codes

Four special codes are available to help reduce memory, software, or DMA overhead.

Special Control Character

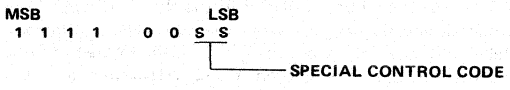

S S	FUNCTION
0 0	End of Row
0 1	End of Row-Stop DMA
1 0	End of Screen
1 1	End of Screen-Stop DMA

The End of Row Code (00) activates VSP and holds it to the end of the line.

The End of Row-Stop DMA Code (01) causes the DMA Control Logic to stop DMA for the rest of the row when it is written into the Row Buffer. It affects the display in the same way as the End of Row Code (00).

The End of Screen Code (10) activates VSP and holds it to the end of the frame.

The End of Screen-Stop DMA Code (11) causes the DMA Control Logic to stop DMA for the rest of the frame when it is written into the Row Buffer. It affects the display in the same way as the End of Screen Code (10).

If the Stop DMA feature is not used, all characters after an End of Row character are ignored, except for the End of Screen character, which operates normally. All characters after an End of Screen character are ignored.

Note: If a Stop DMA character is not the last character in a burst or row, DMA is not stopped until after the next character is read. In this situation, a dummy character must be placed in memory after the Stop DMA character.

Field Attributes

The field attributes are control codes which affect the visual characteristics for a field of characters, starting at the character following the code up to, and including, the character which precedes the *next* field attribute code, or up to the end of the frame. The field attributes are reset during the vertical retrace interval.

There are six field attributes:

1. *Blink* — Characters following the code are caused to blink by activating the Video Suppression output (VSP). The blink frequency is equal to the screen refresh frequency divided by 32.
2. *Highlight* — Characters following the code are caused to be highlighted by activating the Highlight output (HGLT).
3. *Reverse Video* — Characters following the code are caused to appear with reverse video by activating the Reverse Video output (RVV).
4. *Underline* — Characters following the code are caused to be underlined by activating the Light Enable output (LTEN).

5,6. *General Purpose* — There are two additional 8275 outputs which act as general purpose, independently programmable field attributes. GPA_{0-1} are active high outputs.

Field Attribute Code

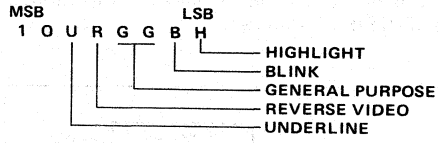

H = 1 FOR HIGHLIGHTING
B = 1 FOR BLINKING
R = 1 FOR REVERSE VIDEO
U = 1 FOR UNDERLINE
GG = GPA_1, GPA_0

*More than one attribute can be enabled at the same time. If the blinking and reverse video attributes are enabled simultaneously, only the reversed characters will blink.

The 8275 can be programmed to provide visible or invisible field attribute characters.

If the 8275 is programmed in the visible field attribute mode, all field attributes will occupy a position on the screen. They will appear as blanks caused by activation of the Video Suppression output (VSP). The chosen visual attributes are activated after this blanked character.

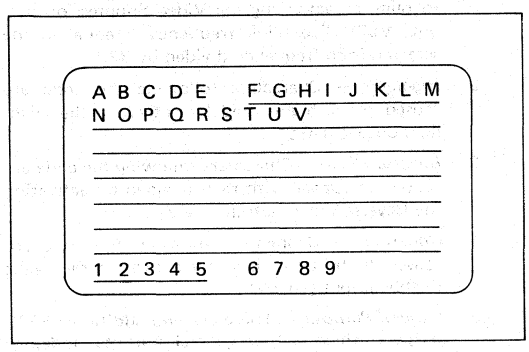

Figure 24. Example of the Visible Field Attribute Mode (Underline Attribute)

If the 8275 is programmed in the invisible field attribute mode, the 8275 FIFO is activated.

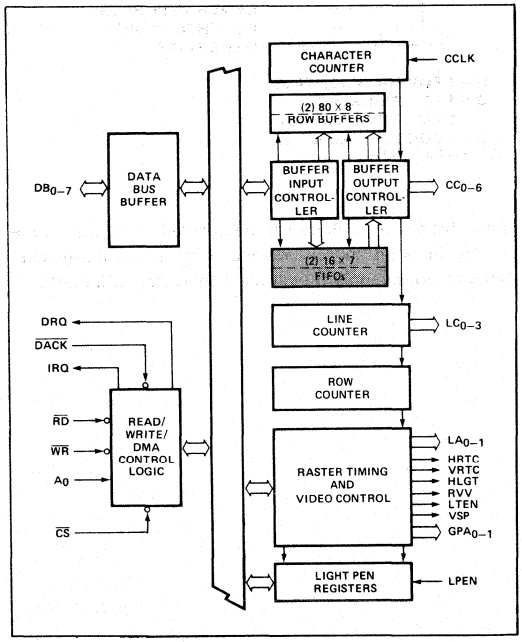

Figure 25. Block Diagram Showing FIFO Activation

Each row buffer has a corresponding FIFO. These FIFOs are 16 characters by 7 bits in size.

When a field attribute is placed in the row buffer during DMA, the buffer input controller recognizes it and places the *next* character in the proper FIFO.

When a field attribute is placed in the Buffer Output Controller during display, it causes the controller to immediately put a character from the FIFO on the Character Code outputs (CC_{0-6}). The chosen Visual Attributes are also activated.

Since the FIFO is 16 characters long, no more than 16 field attribute characters may be used per line in this mode. If more are used, a bit in the status word is set and the first characters in the FIFO are written over and lost.

Note: Since the FIFO is 7 bits wide, the MSB of any characters put in it are stripped off. Therefore, a Visual Attribute or Special Code must *not* immediately follow a field attribute code. If this situation does occur, the Visual Attribute or Special Code will be treated as a normal display character.

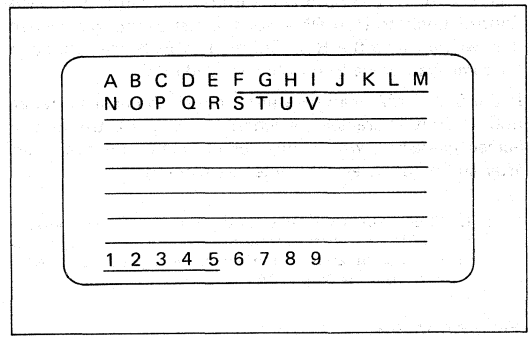

Figure 26. Example of the Invisible Field Attribute Mode (Underline Attribute)

Field and Character Attribute Interaction

Character Attribute Symbols are affected by the Reverse Video (RVV) and General Purpose (GPA_{0-1}) field attributes. They are not affected by Underline, Blink or Highlight field attributes; however, these characteristics can be programmed *individually* for Character Attribute Symbols.

Cursor Timing

The cursor location is determined by a cursor row register and a character position register which are loaded by command to the controller. The cursor can be programmed to appear on the display as:

1. a blinking underline
2. a blinking reverse video block
3. a non-blinking underline
4. a non-blinking reverse video block

The cursor blinking frequency is equal to the screen refresh frequency divided by 16.

If a non-blinking reverse video *cursor* appears in a non-blinking reverse video *field*, the cursor will appear as a normal video block.

If a non-blinking underline *cursor* appears in a non-blinking underline *field*, the cursor will not be visible.

Light Pen Detection

A light pen consists of a micro switch and a tiny light sensor. When the light pen is pressed against the CRT screen, the micro switch enables the light sensor. When the raster sweep reaches the light sensor, it triggers the light pen output.

If the output of the light pen is presented to the 8275 LPEN input, the row and character position coordinates are stored in a pair of registers. These registers can be read on command. A bit in the status word is set, indicating that the light pen signal was detected. The LPEN input must be a 0 to 1 transition for proper operation.

Note: Due to internal and external delays, the character position coordinate will be off by at least three character positions. This has to be corrected in software.

Device Programming

The 8275 has two programming registers, the Command Register (CREG) and the Parameter Register (PREG). It also has a Status Register (SREG). The Command Register can only be written into and the Status Registers can only be read from. They are addressed as follows:

A_0	OPERATION	REGISTER
0	Read	PREG
0	Write	PREG
1	Read	SREG
1	Write	CREG

The 8275 expects to receive a command and a sequence of 0 to 4 parameters, depending on the command. If the proper number of parameter bytes are not received before another command is given, a status flag is set, indicating an improper command.

Instruction Set

The 8275 instruction set consists of 8 commands.

COMMAND	NO. OF PARAMETER BYTES
Reset	4
Start Display	0
Stop Display	0
Read Light Pen	2
Load Cursor	2
Enable Interrupt	0
Disable Interrupt	0
Preset Counters	0

In addition, the status of the 8275 (SREG) can be read by the CPU at any time.

1. Reset Command:

	OPERATION	A_0	DESCRIPTION	DATA BUS MSB							LSB
Command	Write	1	Reset Command	0	0	0	0	0	0	0	0
Parameters	Write	0	Screen Comp Byte 1	S	H	H	H	H	H	H	H
	Write	0	Screen Comp Byte 2	V	V	R	R	R	R	R	R
	Write	0	Screen Comp Byte 3	U	U	U	U	L	L	L	L
	Write	0	Screen Comp Byte 4	M	F	C	C	Z	Z	Z	Z

Action – After the reset command is written, DMA requests stop, 8275 interrupts are disabled, and the VSP output is used to blank the screen. HRTC and VRTC continue to run. HRTC and VRTC timing are random on power-up.

As parameters are written, the screen composition is defined.

Parameter – S Spaced Rows

S	FUNCTIONS
0	Normal Rows
1	Spaced Rows

Parameter – HHHHHHH Horizontal Characters/Row

H	H	H	H	H	H	H	NO. OF CHARACTERS PER ROW
0	0	0	0	0	0	0	1
0	0	0	0	0	0	1	2
0	0	0	0	0	1	0	3
			.				.
			.				.
			.				.
1	0	0	1	1	1	1	80
1	0	1	0	0	0	0	Undefined
			.				.
			.				.
			.				.
1	1	1	1	1	1	1	Undefined

Parameter – VV Vertical Retrace Row Count

V	V	NO. OF ROW COUNTS PER VRTC
0	0	1
0	1	2
1	0	3
1	1	4

Parameter – RRRRRR Vertical Rows/Frame

R	R	R	R	R	R	NO. OF ROWS/FRAME
0	0	0	0	0	0	1
0	0	0	0	0	1	2
0	0	0	0	1	0	3
			.			.
			.			.
			.			.
1	1	1	1	1	1	64

Parameter – UUUU Underline Placement

U	U	U	U	LINE NUMBER OF UNDERLINE
0	0	0	0	1
0	0	0	1	2
0	0	1	0	3
		.		.
		.		.
		.		.
1	1	1	1	16

Parameter – LLLL Number of Lines per Character Row

L	L	L	L	NO. OF LINES/ROW
0	0	0	0	1
0	0	0	1	2
0	0	1	0	3
		.		.
		.		.
		.		.
1	1	1	1	16

Parameter – M Line Counter Mode

M	LINE COUNTER MODE
0	Mode 0 (Non-Offset)
1	Mode 1 (Offset by 1 Count)

Parameter – F Field Attribute Mode

F	FIELD ATTRIBUTE MODE
0	Transparent
1	Non-Transparent

Parameter – CC Cursor Format

C	C	CURSOR FORMAT
0	0	Blinking reverse video block
0	1	Blinking underline
1	0	Nonblinking reverse video block
1	1	Nonblinking underling

Parameter – ZZZZ Horizontal Retrace Count

Z	Z	Z	Z	NO. OF CHARACTER COUNTS PER HRTC
0	0	0	0	2
0	0	0	1	4
0	0	1	0	6
		.		.
		.		.
		.		.
1	1	1	1	32

Note: uuuu MSB determines blanking of top and bottom lines (1 = blanked, 0 = not blanked).

2. Start Display Command:

	OPERATION	A_0	DESCRIPTION	DATA BUS MSB							LSB
Command	Write	1	Start Display	0	0	1	S	S	S	B	B
No parameters											

S S S BURST SPACE CODE

S S S	NO. OF CHARACTER CLOCKS BETWEEN DMA REQUESTS
0 0 0	0
0 0 1	7
0 1 0	15
0 1 1	23
1 0 0	31
1 0 1	39
1 1 0	47
1 1 1	55

B B BURST COUNT CODE

B B	NO. OF DMA CYCLES PER BURST
0 0	1
0 1	2
1 0	4
1 1	8

Action — 8275 interrupts are enabled, DMA requests begin, video is enabled, Interrupt Enable and Video Enable status flags are set.

3. Stop Display Command:

	OPERATION	A_0	DESCRIPTION	DATA BUS MSB							LSB
Command	Write	1	Stop Display	0	1	0	0	0	0	0	0
No parameters											

Action — Disables video, interrupts remain enabled, HRTC and VRTC continue to run, Video Enable status flag is reset, and the "Start Display" command must be given to re-enable the display.

4. Read Light Pen Command

	OPERATION	A_0	DESCRIPTION	DATA BUS MSB							LSB
Command	Write	1	Read Light Pen	0	1	1	0	0	0	0	0
Parameters	Read	0	Char. Number	(Char. Position in Row)							
	Read	0	Row Number	(Row Number)							

Action — The 8275 is conditioned to supply the contents of the light pen position registers in the next two read cycles of the parameter register. Status flags are not affected.

Note: Software correction of light pen position is required.

5. Load Cursor Position:

	OPERATION	A_0	DESCRIPTION	DATA BUS MSB							LSB
Command	Write	1	Load Cursor	1	0	0	0	0	0	0	0
Parameters	Write	0	Char. Number	(Char. Position in Row)							
	Write	0	Row Number	(Row Number)							

Action — The 8275 is conditioned to place the next two parameter bytes into the cursor position registers. Status flags not affected.

6. Enable Interrupt Command:

	OPERATION	A_0	DESCRIPTION	DATA BUS MSB							LSB
Command	Write	1	Enable Interrupt	1	0	1	0	0	0	0	0
No parameters											

Action — The interrupt enable status flag is set and interrupts are enabled.

7. Disable Interrupt Command:

	OPERATION	A_0	DESCRIPTION	DATA BUS MSB							LSB
Command	Write	1	Disable Interrupt	1	1	0	0	0	0	0	0
No parameters											

Action — Interrupts are disabled and the interrupt enable status flag is reset.

8. Preset Counters Command:

	OPERATION	A_0	DESCRIPTION	DATA BUS MSB							LSB
Command	Write	1	Preset Counters	1	1	1	0	0	0	0	0
No parameters											

Action — The internal timing counters are preset, corresponding to a screen display position at the top left corner. Two character clocks are required for this operation. The counters will remain in this state until any other command is given.

This command is useful for system debug and synchronization of clustered CRT displays on a single CPU.

Status Flags

	OPERATION	A_0	DESCRIPTION	DATA BUS MSB	LSB
Command	Read	1	Status Word	0 IE IR LP IC VE DU FO	

IE – (Interrupt Enable) Set or reset by command. It enables vertical retrace interrupt. It is automatically set by a "Start Display" command and reset with the "Reset" command.

IR – (Interrupt Request) This flag is set at the beginning of display of the last row of the frame if the interrupt enable flag is set. It is reset after a status read operation.

LP – This flag is set when the light pen input (LPEN) is activated and the light pen registers have been loaded. This flag is automatically reset after a status read.

IC – (Improper Command) This flag is set when a command parameter string is too long or too short. The flag is automatically reset after a status read.

VE – (Video Enable) This flag indicates that video operation of the CRT is enabled. This flag is set on a "Start Display" command, and reset on a "Stop Display" or "Reset" command.

DU – (DMA Underrun) This flag is set whenever a data underrun occurs during DMA transfers. Upon detection of DU, the DMA operation is stopped and the screen is blanked until after the vertical retrace interval. This flag is reset after a status read.

FO – (FIFO Overrun) This flag is set whenever the FIFO is overrun. It is reset on a status read.

ABSOLUTE MAXIMUM RATINGS*

Ambient Temperature Under Bias. . . . . 0°C to 70°C
Storage Temperature . . . . . -65°C to +150°C
Voltage On Any Pin
With Respect to Ground . . . . . -0.5V to +7V
Power Dissipation . . . . . 1 Watt

NOTICE: Stresses above those listed under "Absolute Maximum Ratings" may cause permanent damage to the device. This is a stress rating only and functional operation of the device at these or any other conditions above those indicated in the operational sections of this specification is not implied.

D.C. CHARACTERISTICS (T_A = 0°C to 70°C, V_{CC} = 5V ±5%)

Symbol	Parameter	Min.	Max.	Units	Test Conditions
V_{IL}	Input Low Voltage	-0.5	0.8	V	
V_{IH}	Input High Voltage	2.0	V_{CC}+0.5V	V	
V_{OL}	Output Low Voltage		0.45	V	I_{OL} = 2.2 mA
V_{OH}	Output High Voltage	2.4		V	I_{OH} = -400 μA
I_{IL}	Input Load Current		±10	μA	V_{IN} = V_{CC} to 0V
I_{OFL}	Output Float Leakage		±10	μA	V_{OUT} = V_{CC} to 0.45V
I_{CC}	V_{CC} Supply Current		160	mA	

CAPACITANCE (T_A = 25°C, V_{CC} = GND = 0V)

Symbol	Parameter	Min.	Max.	Units	Test Conditions
C_{IN}	Input Capacitance		10	pF	f_c = 1 MHz
$C_{I/O}$	I/O Capacitance		20	pF	Unmeasured pins returned to V_{SS}.

A.C. CHARACTERISTICS (T_A = 0°C to 70°C, V_{CC} = 5.0V ±5%, GND = 0V)

Bus Parameters

READ CYCLE

Symbol	Parameter	Min.	Max.	Units	Test Conditions
t_{AR}	Address Stable Before READ	0		ns	
t_{RA}	Address Hold Time for READ	0		ns	
t_{RR}	READ Pulse Width	250		ns	
t_{RD}	Data Delay from READ		200	ns	C_L = 150 pF
t_{DF}	READ to Data Floating	20	100	ns	C_L min. = 20 pF; C_L max. = 150 pF

WRITE CYCLE

Symbol	Parameter	Min.	Max.	Units	Test Conditions
t_{AW}	Address Stable Before WRITE	0		ns	
t_{WA}	Address Hold Time for WRITE	0		ns	
t_{WW}	WRITE Pulse Width	250		ns	
t_{DW}	Data Setup Time for WRITE	150		ns	
t_{WD}	Data Hold Time for WRITE	0		ns	

A.C. CHARACTERISTICS (Continued)

CLOCK TIMING

Symbol	Parameter	8275 Min.	8275 Max.	8275-2 Min.	8275-2 Max.	Units	Test Conditions
t_{CLK}	Clock Period	480		320		ns	
t_{KH}	Clock High	240		120		ns	
t_{KL}	Clock Low	160		120		ns	
t_{KR}	Clock Rise	5	30	5	30	ns	
t_{KF}	Clock Fall	5	30	5	30	ns	

OTHER TIMING

Symbol	Parameter	8275 Min.	8275 Max.	8275-2 Min.	8275-2 Max.	Units	Test Conditions
t_{CC}	Character Code Output Delay		150		150	ns	C_L – 50 pF
t_{HR}	Horizontal Retrace Output Delay		200		150	ns	C_L = 50 pF
t_{LC}	Line Count Output Delay		400		250	ns	C_L = 50 pF
t_{AT}	Control/Attribute Output Delay		275		250	ns	C_L = 50 pF
t_{VR}	Vertical Retrace Output Delay		275		250	ns	C_L = 50 pF
t_{RI}	IRQ↓ from RD↑		250		250	ns	C_L = 50 pF
t_{WQ}	DRQ↑ from WR↑		250		250	ns	C_L = 50 pF
t_{RQ}	DRQ↓ from WR↓		200		200	ns	C_L = 50 pF
t_{LR}	DACK↓ to WR↓	0		0		ns	
t_{RL}	WR↑ to DACK↑	0		0		ns	
t_{PR}	LPEN Rise		50		50	ns	
t_{PH}	LPEN Hold	100		100		ns	

A.C. TESTING INPUT, OUTPUT WAVEFORM

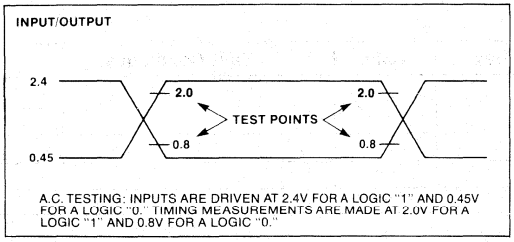

A.C. TESTING: INPUTS ARE DRIVEN AT 2.4V FOR A LOGIC "1" AND 0.45V FOR A LOGIC "0." TIMING MEASUREMENTS ARE MADE AT 2.0V FOR A LOGIC "1" AND 0.8V FOR A LOGIC "0."

A.C. TESTING LOAD CIRCUIT

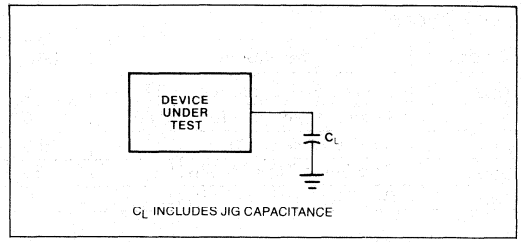

C_L INCLUDES JIG CAPACITANCE

WAVEFORMS

TYPICAL DOT LEVEL TIMING

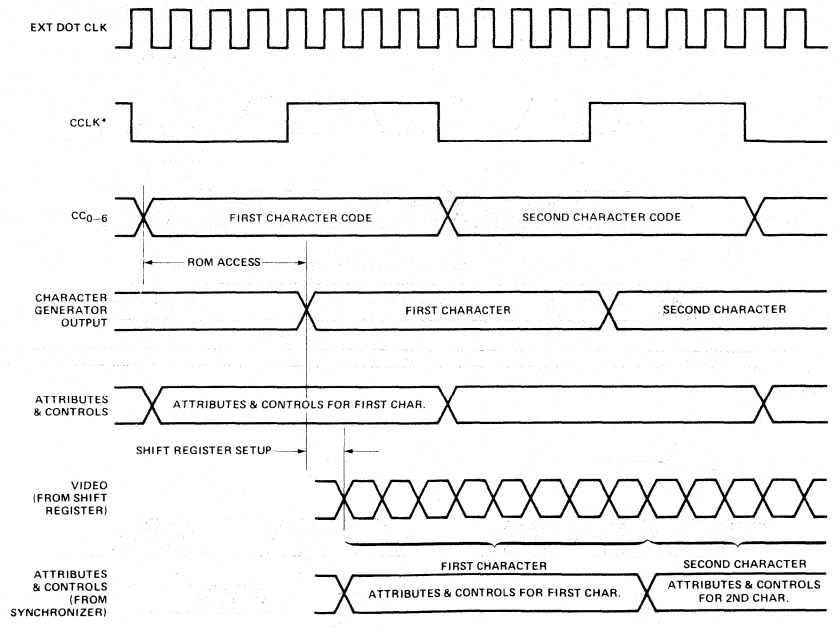

*CCLK IS A MULTIPLE OF THE DOT CLOCK AND AN INPUT TO THE 8275.

LINE TIMING

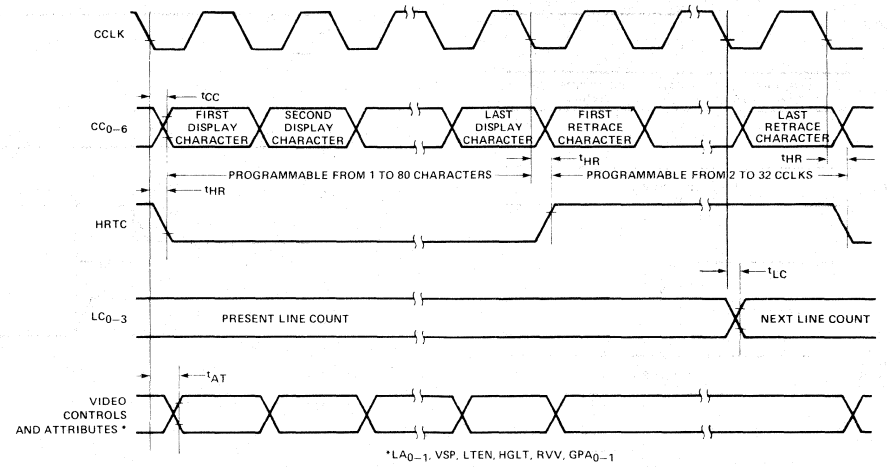

*LA_{0-1}, VSP, LTEN, HGLT, RVV, GPA_{0-1}

WAVEFORMS (Continued)

ROW TIMING

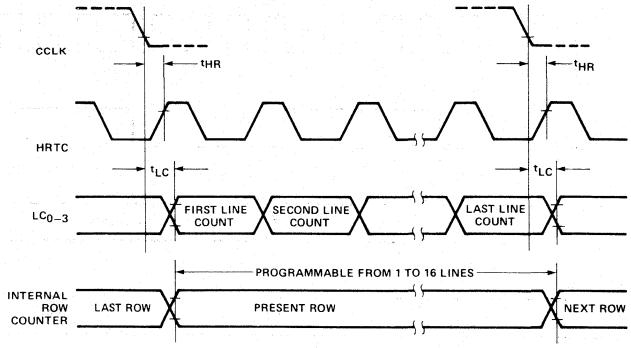

FRAME TIMING

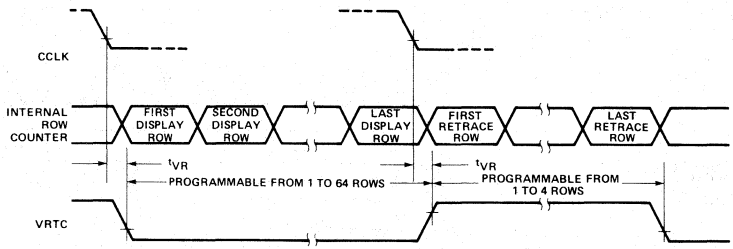

INTERRUPT TIMING

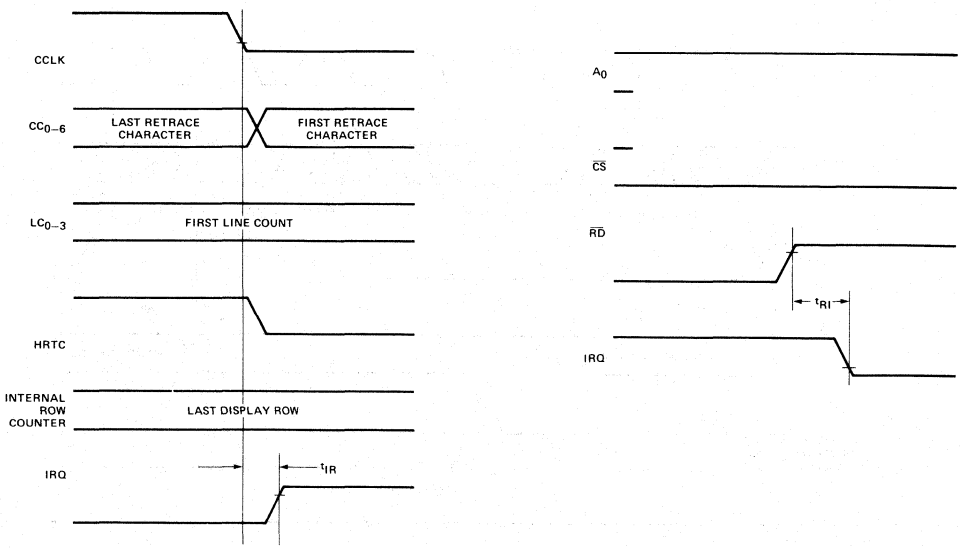

WAVEFORMS (Continued)

DMA TIMING

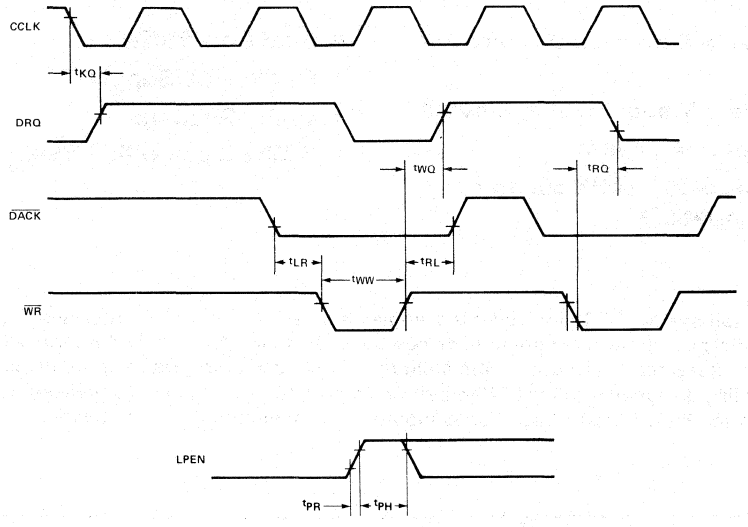

WRITE TIMING

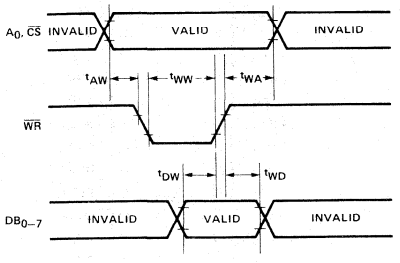

READ TIMING

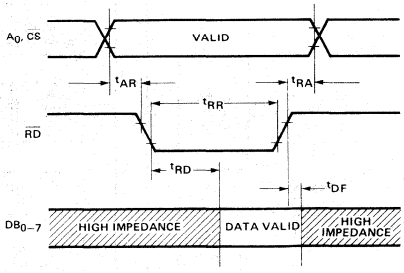

CLOCK TIMING

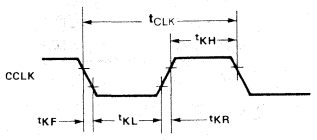

8276
SMALL SYSTEM CRT CONTROLLER

- **Programmable Screen and Character Format**
- **6 Independent Visual Field Attributes**
- **Cursor Control (4 Types)**
- **MCS-51®, MCS-85®, iAPX 86, and iAPX 88 Compatible**
- **Dual Row Buffers**
- **Single +5V Supply**
- **40-Pin Package**
- **3 MHz Clock with 8276-2**

The Intel 8276 Small System CRT Controller is a single chip device intended to interface CRT raster scan displays with Intel microcomputers in minimum device-count systems. Its primary function is to refresh the display by buffering character information from main memory and keeping track of the display position of the screen. The flexibility designed into the 8276 will allow simple interface to almost any raster scan CRT display. It can be used with the 8051 Single Chip Microcomputer for a minimum IC count design.

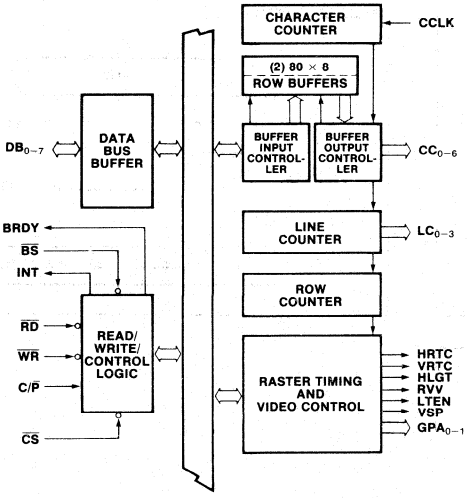

Figure 1. Block Diagram

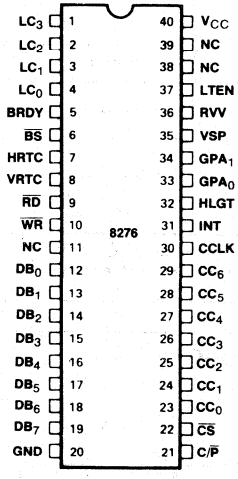

Figure 2. Pin Configuration

Table 1. Pin Descriptions

Symbol	Pin No.	Type	Name and Function
LC_3 LC_2 LC_1 LC_0	1 2 3 4	O	**Line count.** Output from the line counter which is used to address the character generator for the line positions on the screen.
BRDY	5	O	**Buffer ready.** Output signal indicating that a Row Buffer is ready for loading of character data.
$\overline{BS}$	6	I	**Buffer select.** Input signal enabling $\overline{WR}$ for character data into the Row Buffers.
HRTC	7	O	**Horizontal retrace.** Output signal which is active during the programmed horizontal retrace interval. During this period the VSP output is high and the LTEN output is low.
VRTC	8	O	**Vertical retrace.** Output signal which is active during the programmed vertical retrace interval. During this period the VSP output is high and the LTEN output is low.
$\overline{RD}$	9	I	**Read input.** A control signal to read registers.
$\overline{WR}$	10	I	**Write input.** A control signal to write commands into the control registers or write data into the row buffers.
NC	11		**No connection.**
DB_0 DB_1 DB_2 DB_3 DB_4 DB_5 DB_6 DB_7	12 13 14 15 16 17 18 19	I/O	**Bidirectional data bus.** Three-state lines. The outputs are enabled during a read of the C or P ports.
Ground	20		**Ground.**

Symbol	Pin No.	Type	Name and Function
V_{CC}	40		**+5V power supply.**
NC	39		**No connection.**
NC	38		**No connection.**
LTEN	37	O	**Light enable.** Output signal used to enable the video signal to the CRT. This output is active at the programmed underline cursor position, and at positions specified by attribute codes.
RVV	36	O	**Reverse video.** Output signal used to activate the CRT circuitry to reverse the video signal. This output is active at the cursor position if a reverse video block cursor is programmed or at the positions specified by the field attribute codes.
VSP	35	O	**Video suppression.** Output signal used to blank the video signal to the CRT. This output is active: — during the horizontal and vertical retrace intervals. — at the top and bottom lines of rows if underline is programmed to be number 8 or greater. — when an end of row or end of screen code is detected. — when a Row Buffer underrun occurs. — at regular intervals (1/16 frame frequency for cursor, 1/32 frame frequency for attributes)—to create blinking displays as specified by cursor or field attribute programming.
GPA_1 GPA_0	34 33	O	**General purpose attribute codes.** Outputs which are enabled by the general purpose field attribute codes.
HLGT	32	O	**Highlight.** Output signal used to intensify the display at particular positions on the screen as specified by the field attribute codes.
INT	31	O	**Interrupt output.**
CCLK	30	I	**Character clock** (from dot/timing logic).
CC_6 CC_5 CC_4 CC_3 CC_2 CC_1 CC_0	29 28 27 26 25 24 23	O	**Character codes.** Output from the row buffers used for character selection in the character generator.
$\overline{CS}$	22	I	**Chip select.** Enables $\overline{RD}$ of status or $\overline{WR}$ of command or parameters.
C/ $\overline{P}$	21	I	**Port address.** A high input on this pin selects the "C" port or command registers and a low input selects the "P" port or parameter registers.

FUNCTIONAL DESCRIPTION

Data Bus Buffer

This 3-state, bidirectional, 8-bit buffer is used to interface the 8276 to the system Data Bus.

This functional block accepts inputs from the System Control Bus and generates control signals for overall device operation. It contains the Command, Parameter, and Status Registers that store the various control formats for the device functional definition.

C/$\overline{P}$	OPERATION	REGISTER
0	Read	RESERVED
0	Write	PARAMETER
1	Read	STATUS
1	Write	COMMAND

$\overline{RD}$ (READ)
A "low" on this input informs the 8276 that the CPU is reading status information from the 8276.

$\overline{WR}$ (WRITE)
A "low" on this input informs the 8276 that the CPU is writing data or control words to the 8276.

$\overline{CS}$ (CHIP SELECT)
A "low" on this input selects the 8276 for $\overline{RD}$ or $\overline{WR}$ of Commands, Status, and Parameters.

BRDY (BUFFER READY)
A "high" on this output indicates that the 8276 is ready to receive character data.

$\overline{BS}$ (BUFFER SELECT)
A "low" on this input enables $\overline{WR}$ of character data to the 8276 row buffers.

INT (INTERRUPT)
A "high" on this output informs the CPU that the 8276 needs interrupt service.

C/$\overline{P}$	$\overline{RD}$	$\overline{WR}$	$\overline{CS}$	$\overline{BS}$	
0	0	1	0	1	Reserved
0	1	0	0	1	Write 8276 Parameter
1	0	1	0	1	Read 8276 Status
1	1	0	0	1	Write 8276 Command
X	1	0	1	0	Write 8276 Row Buffer
X	1	1	X	X	High Impedance
X	X	X	1	1	High Impedance

Character Counter

The Character Counter is a programmable counter that is used to determine the number of characters to be displayed per row and the length of the horizontal retrace interval. It is driven by the CCLK (Character Clock) input, which should be derived from the external dot clock.

Line Counter

The Line Counter is a programmable counter that is used to determine the number of horizontal lines (Raster Scans) per character row. Its outputs are used to address the external character generator.

Row Counter

The Row Counter is a programmable counter that is used to determine the number of character rows to be displayed per frame and length of the vertical retrace interval.

Raster Timing and Video Controls

The Raster Timing circuitry controls the timing of the HRTC (Horizontal Retrace) and VRTC (Vertical Retrace) outputs. The Video Control circuitry controls the generation of HGLT (Highlight), RVV (Reverse Video), LTEN (Light Enable), VSP (Video Suppress), and GPA_{0-1} (General Purpose Attribute) outputs.

Row Buffers

The Row Buffers are two 80-character buffers. They are filled from the microcomputer system memory with the character codes to be displayed. While one row buffer is displaying a row of characters, the other is being filled with the next row of characters.

Buffer Input/Output Controllers

The Buffer Input/Output Controllers decode the characters being placed in the row buffers. If the character is a field attribute or special code, they control the appropriate action. (Example: A "Highlight" field attribute will cause the Buffer Output Controller to activate the HGLT output.)

SYSTEM OPERATION

The 8276 is programmable to a large number of different display formats. It provides raster timing, display row buffering, visual attribute decoding and cursor timing.

It is designed to interface with standard character generators for dot matrix decoding. Dot level timing must be provided by external circuitry.

General Systems Operational Description

Display characters are retrieved from memory and displayed on a row-by-row basis. The 8276 has two row buffers. While one row buffer is being used for display, the other is being filled with the next row of characters to be displayed. The number of display characters per row and the number of character rows per frame are software programmable, providing easy interface to most CRT displays. (See Programming Section.)

The 8276 uses BRDY to request character data to fill the row buffer that is not being used for display.

The 8276 displays character rows one scan line at a time. The number of scan lines per character row, the underline position, and blanking of top and bottom lines are programmable. (See Programming Section.)

The 8276 provides special Control Codes which can be used to minimize overhead. It also provides Visual Attribute Codes to cause special action on the screen without the use of the character generator. (See Visual Attributes Section.)

The 8276 also controls raster timing. This is done by generating Horizontal Retrace (HRTC) and Vertical Retrace (VRTC) signals. The timing of these signals is also programmable.

The 8276 can generate a cursor. Cursor location and format are programmable. (See Programming Section.)

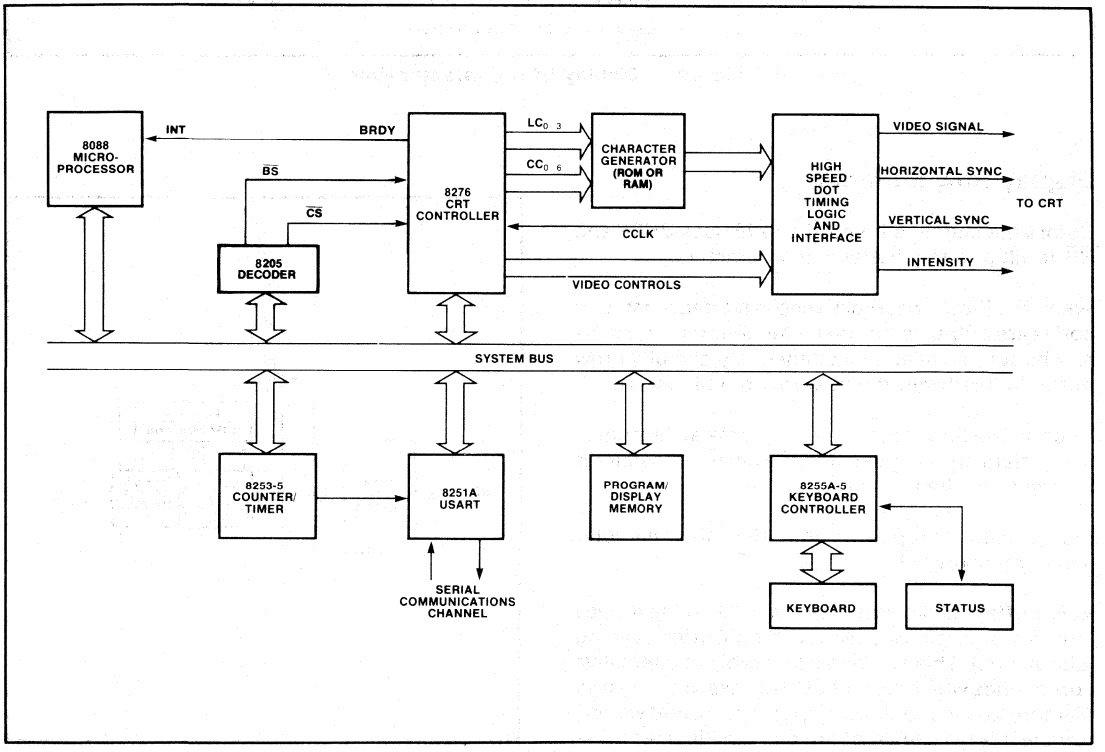

Figure 3. CRT System Block Diagram

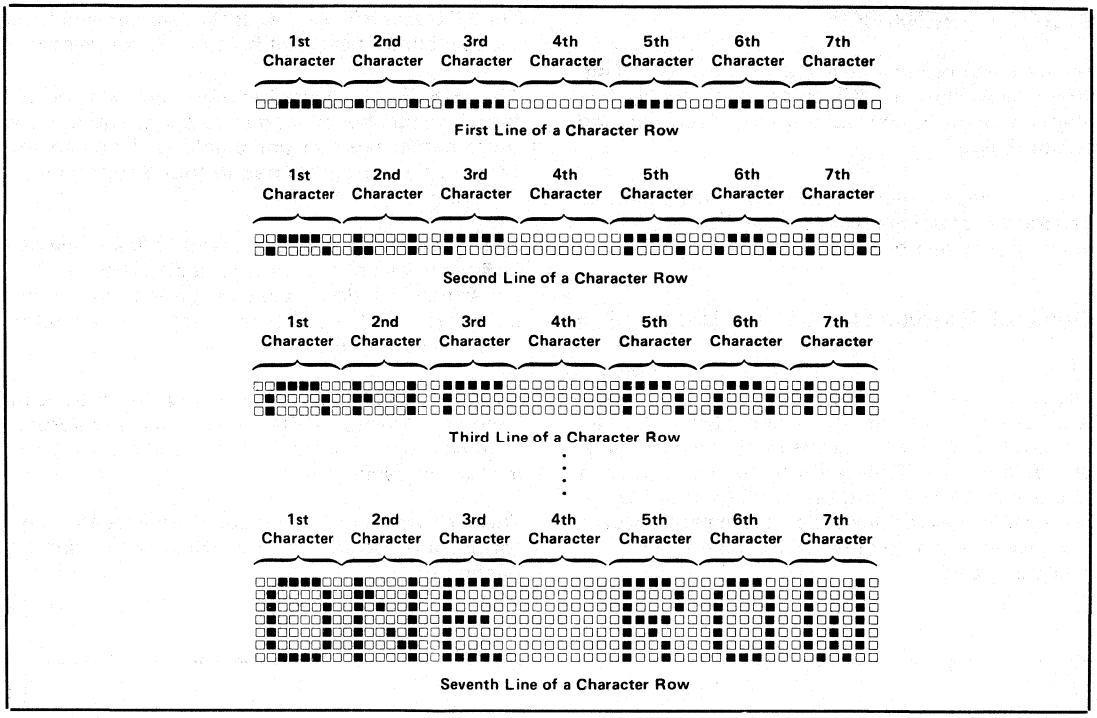

Figure 4. Display Of A Character Row

Display Row Buffering

Before the start of a frame, the 8276 uses BRDY and $\overline{BS}$ to fill one row buffer with characters.

When the first horizontal sweep is started, character codes are output to the character generator from the row buffer just filled. Simultaneously, the other row buffer is filled with the next row of characters.

After all the lines of the character row are scanned, the buffers are swapped and the same procedure is followed for the next row.

This process is repeated until all of the character rows are displayed.

Row Buffering allows the CPU access to the display memory at all times except during Buffer Loading (about 25%). This compares favorably to alternative approaches which restrict CPU access to the display memory to occur only during horizontal and vertical retrace intervals (80% of the bus time is used to refresh the display.)

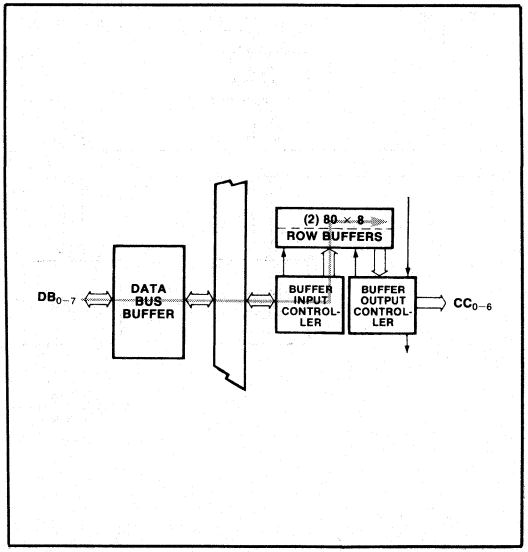

Figure 5. First Row Buffer Filled

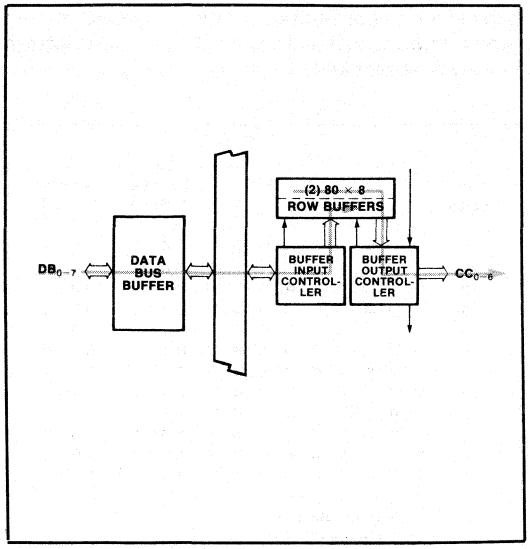

Figure 6. Second Row Buffer Filled, First Row Displayed

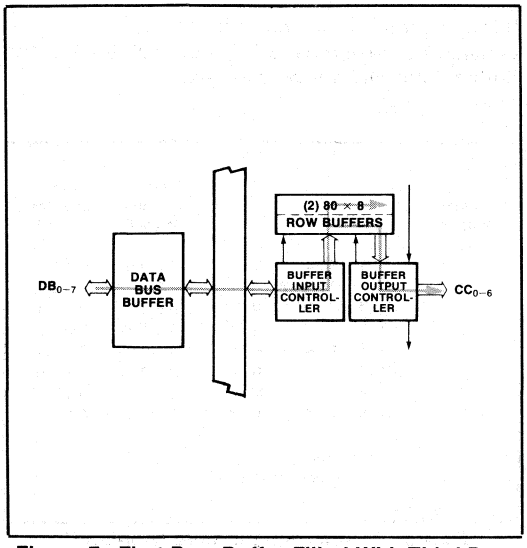

Figure 7. First Row Buffer Filled With Third Row, Second Row Displayed

Display Format

SCREEN FORMAT

The 8276 can be programmed to generate from 1 to 80 characters per row, and from 1 to 64 rows per frame.

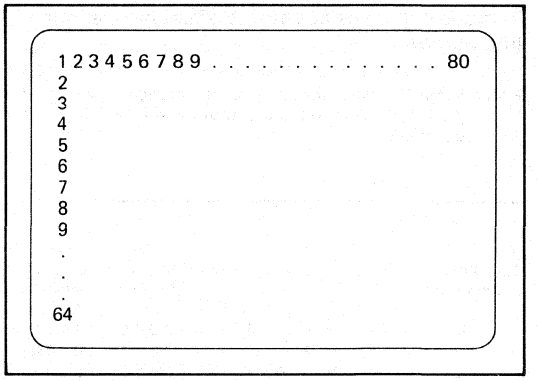

Figure 8. Screen Format

The 8276 can also be programmed to blank alternate rows. In this mode, the first row is displayed, the second blanked, the third displayed, etc. Display data is not requested for the blanked rows.

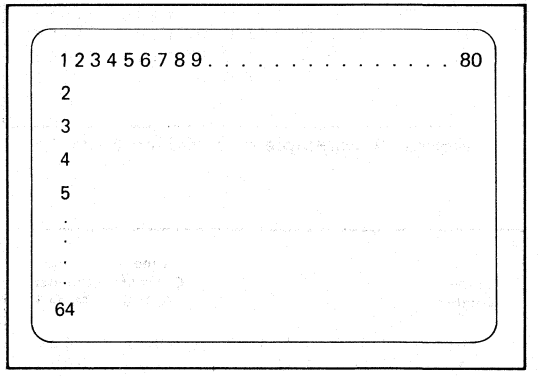

Figure 9. Blank Alternate Rows Mode

ROW FORMAT

The 8276 is designed to hold the line count stable while outputting the appropriate character codes during each horizontal sweep. The line count is incremented during horizontal retrace and the whole row of character codes are output again during the next sweep. This is continued until the entire character row is displayed.

The number of lines (horizontal sweeps) per character row is programmable from 1 to 16.

The output of the line counter can be programmed to be in one of two modes.

In mode 0, the output of the line *counter* is the same as the line *number.*

In mode 1, the line *counter* is offset by one from the line *number*.

Note: In mode 1, while the *first* line (line number 0) is being displayed, the *last* count is output by the line counter (see examples).

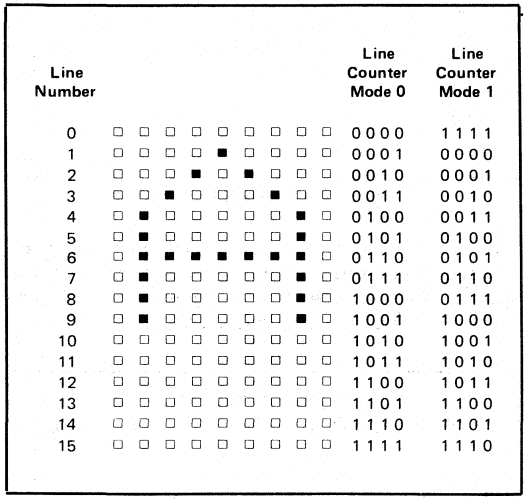

Figure 10. Example of a 16-Line Format

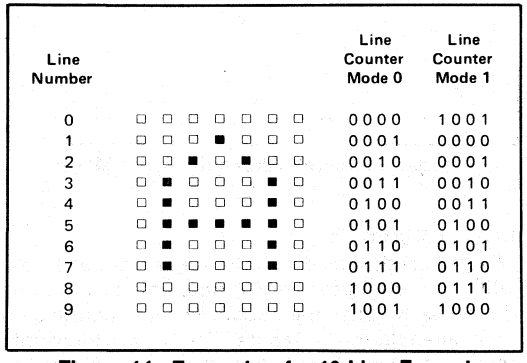

Figure 11. Example of a 10-Line Format

Mode 0 is useful for character generators that leave address zero blank and start at address 1. Mode 1 is useful for character generators which start at address zero.

Underline placement is also programmable (from line *number* 0 to 15). This is independent of the line *counter* mode.

If the line *number* of the underline is greater than 7 (line *number* MSB = 1), then the top and bottom lines will be blanked.

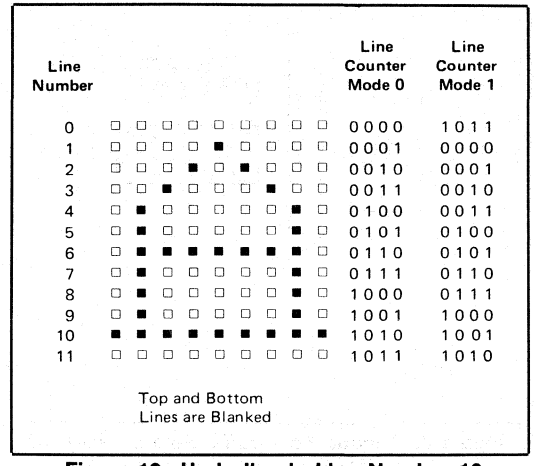

Figure 12. Underline in Line Number 10

If the line *number* of the underline is less than or equal to 7 (line *number* MSB = 0), then the top and bottom lines will *not* be blanked.

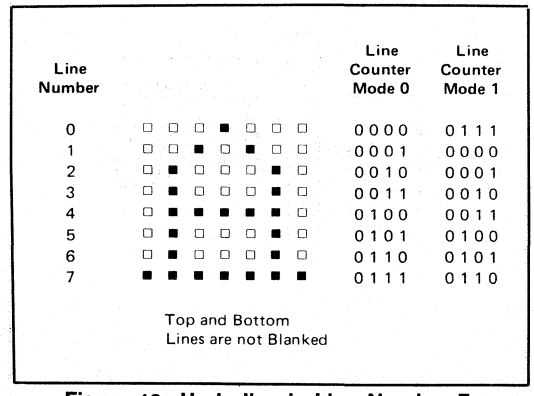

Figure 13. Underline in Line Number 7

If the line *number* of the underline is greater than the maximum number of lines, the underline will not appear.

Blanking is accomplished by the VSP (Video Suppression) signal. Underline is accomplished by the LTEN (Light Enable) signal.

DOT FORMAT

Dot width and character width are dependent upon the external timing and control circuitry.

Dot level timing circuitry should be designed to accept the parallel output of the character generator and shift it out serially at the rate required by the CRT display.

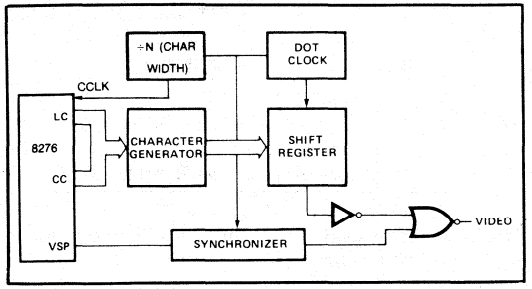

Figure 14. Typical Dot Level Block Diagram

Dot width is a function of dot clock frequency.

Character width is a function of the character generator width.

Horizontal character spacing is a function of the shift register length.

Note: Video control and timing signals must be synchronized with the video signal due to the character generator access delay.

Raster Timing

The character counter is driven by the character clock input (CCLK). It counts out the characters being displayed (programmable from 1 to 80). It then causes the line counter to increment, and it starts counting out the horizontal retrace interval (programmable from 2 to 32). This process is constantly repeated.

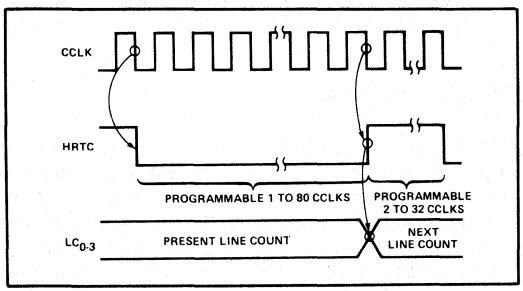

Figure 15. Line Timing

The line counter is driven by the character counter. It is used to generate the line address outputs (LC_{0-3}) for the character generator. After it counts all of the lines in a character row (programmable from 1 to 16), it increments the row counter, and starts over again. (See Character Format Section for detailed description of Line Counter functions.)

The row counter is an internal counter driven by the line counter. It controls the functions of the row buffers and counts the number of character rows displayed.

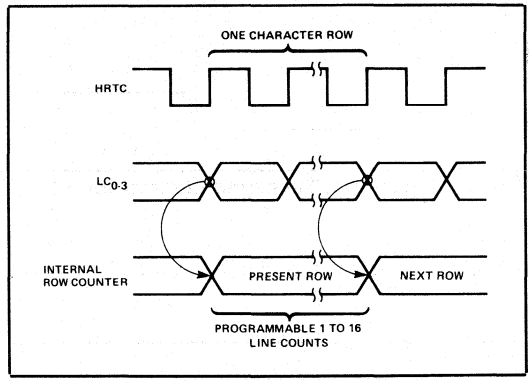

Figure 16. Row Timing

After the row counter counts all of the rows in a frame (programmable from 1 to 64), it starts counting out the vertical retrace interval (programmable from 1 to 4).

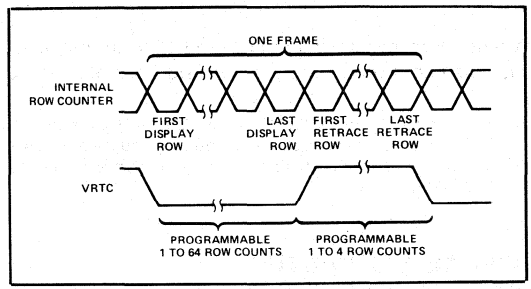

Figure 17. Frame Timing

The Video Suppression Output (VSP) is active during horizontal and vertical retrace intervals.

Dot level timing circuitry must synchronize these outputs with the video signal to the CRT Display.

Interrupt Timing

The 8276 can be programmed to generate an interrupt request at the end of each frame. If the 8276 interrupt enable flag is set, an interrupt request will occur at the *beginning* of the *last display row.*

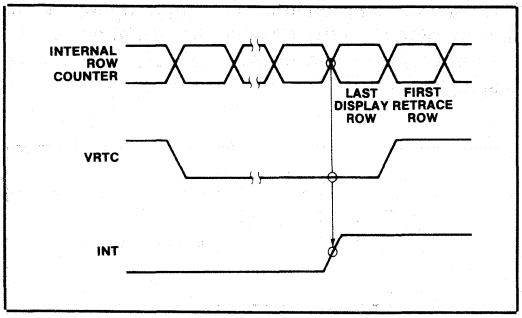

Figure 18. Beginning of Interrupt

INT will go inactive after the status register is read.

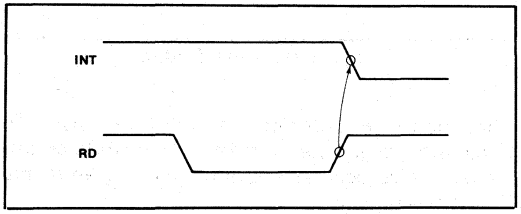

Figure 19. End of Interrupt

A reset command will also cause INT to go inactive, but this is not recommended during normal service.

Note: Upon power-up, the 8276 Interrupt Enable Flag may be set. As a result, the user's cold start routine should write a reset command to the 8276 before system interrupts are enabled.

VISUAL ATTRIBUTES AND SPECIAL CODES

The characters processed by the 8276 are 8-bit quantities. The character code outputs provide the character generator with 7 bits of address. The Most Significant Bit is the extra bit and it is used to determine if it is a normal display character (MSB = 0), or if it is a Field Attribute or Special Code (MSB = 1).

Special Codes

Four special codes are available to help reduce bus usage.

SPECIAL CONTROL CHARACTER

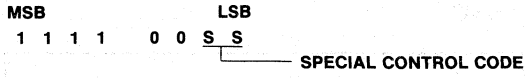

S	S	FUNCTION
0	0	End of Row
0	1	End of Row-Stop Buffer Loading
1	0	End of Screen
1	1	End of Screen-Stop Buffer Loading

The End of Row Code (00) activates VSP and holds it to the end of the line.

The End of Row-Stop Buffer Loading (BRDY) Code (01) causes the Buffer Loading Control Logic to stop buffer loading for the rest of the row upon being written into the Row Buffer. It affects the display in the same way as the End of Row Code (00).

The End of Screen Code (10) activates VSP and holds it to the end of the frame.

The End of Screen-Stop Buffer Loading (BRDY) Code (11) causes the Row Buffer Control Logic to stop buffer loading for the rest of the frame upon being written. It affects the display in the same way as the End of Screen Code (10).

If the Stop Buffer Loading feature is not used, all characters after an End of Row character are ignored, except for the End of Screen character, which operates normally. All characters after an End of Screen character are ignored.

Note: If a Stop Buffer Loading is not the last character in a row, Buffer Loading is not stopped until after the next character is read. In this situation, a dummy character must be placed in memory after the Stop Buffer Loading character.

Field Attributes

The field attributes are control codes which affect the visual characteristics for a field of characters, starting at the character following the code up to, and including, the character which precedes the *next* field attribute code, or up to the end of the frame. The field attributes are reset during the vertical retrace interval.

The 8276 can be programmed to provide visible field attribute characters; all field attribute codes will occupy a position on the screen. These codes will appear as blanks caused by activation of the Video Suppression output (VSP). The chosen visual attributes are activated after this blanked character.

There are six field attributes:

1. *Blink*—Characters following the code are caused to blink by activating the Video Suppression output (VSP). The blink frequency is equal to the screen refresh frequency divided by 32.
2. *Highlight*—Characters following the code are caused to be highlighted by activating the Highlight output (HGLT).
3. *Reverse Video*—Characters following the code are caused to appear with reverse video by activating the Reverse Video output (RVV).
4. *Underline*—Characters following the code are caused to be underlined by activating the Light Enable output (LTEN).

5,6. *General Purpose*—There are two additional 8276 outputs which act as general purpose, independently programmable field attributes. GPA_{0-1} are active high outputs.

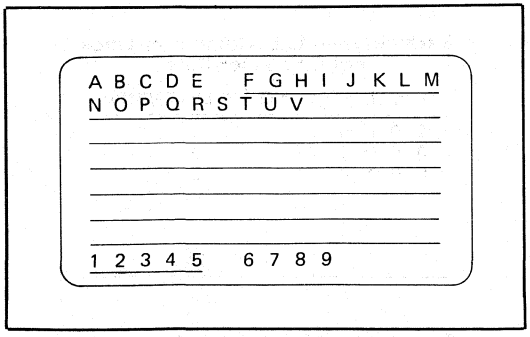

Figure 20. Example of a Visible Field Attribute (Underline Attribute)

FIELD ATTRIBUTE CODE

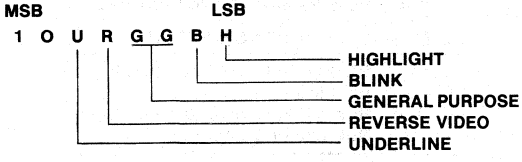

H = 1 FOR HIGHLIGHTING
B = 1 FOR BLINKING
R = 1 FOR REVERSE VIDEO
U = 1 FOR UNDERLINE
GG = GPA_1, GPA_0

Note: More than one attribute can be enabled at the same time. If the blinking and reverse video attributes are enabled simultaneously, only the reversed characters will blink.

Cursor Timing

The cursor location is determined by a cursor row register and a character position register which are loaded by command to the controller. The cursor can be programmed to appear on the display as:

1. a blinking underline
2. a blinking reverse video block
3. a non-blinking underline
4. a non-blinking reverse video block

The cursor blinking frequency is equal to the screen refresh frequency divided by 16.

If a non-blinking reverse video *cursor* appears in a non-blinking reverse video *field*, the cursor will appear as a normal video block.

If a non-blinking underline *cursor* appears in a non-blinking underline *field*, the cursor will not be visible.

Device Programming

The 8276 has two programming registers, the Command Register and the Parameter Register. It also has a Status Register. The Command Register can only be written into and the Status Register can only be read from. They are addressed as follows:

C/$\overline{P}$	OPERATION	REGISTER
0	Read	Reserved
0	Write	Parameter
1	Read	Status
1	Write	Command

The 8276 expects to receive a command and a sequence of 0 to 4 parameters, depending on the command. If the proper number of parameter bytes are not received before another command is given, a status flag is set, indicating an improper command.

Instruction Set

The 8276 instruction set consists of 7 commands.

COMMAND	NO. OF PARAMETER BYTES
Reset	4
Start Display	0
Stop Display	0
Load Cursor	2
Enable Interrupt	0
Disable Interrupt	0
Preset Counters	0

In addition, the status of the 8276 can be read by the CPU at any time.

1. RESET COMMAND

	OPERATION	C/P	DESCRIPTION	DATA BUS MSB LSB
Command	Write	1	Reset Command	0 0 0 0 0 0 0 0
Parameters	Write	0	Screen Comp Byte 1	S H H H H H H H
	Write	0	Screen Comp Byte 2	V V R R R R R R
	Write	0	Screen Comp Byte 3	U U U U L L L L
	Write	0	Screen Comp Byte 4	M 1 C C Z Z Z Z

Action—After the reset command is written, BRDY goes inactive, 8276 interrupts are disabled, and the VSP output is used to blank the screen. HRTC and VRTC continue to run. HRTC and VRTC timing are random on power-up

As parameters are written, the screen composition is defined.

Parameter—S Spaced Rows

S	FUNCTIONS
0	Normal Rows
1	Spaced Rows

Parameter—HHHHHHH Horizontal Characters/Row

H H H H H H H	NO. OF CHARACTERS PER ROW
0 0 0 0 0 0 0	1
0 0 0 0 0 0 1	2
0 0 0 0 0 1 0	3
. . .	.
1 0 0 1 1 1 1	80
1 0 1 0 0 0 0	Undefined
. . .	.
1 1 1 1 1 1 1	Undefined

Parameter—VV Vertical Retrace Row Count

V V	NO. OF ROW COUNTS PER VRTC
0 0	1
0 1	2
1 0	3
1 1	4

Parameter—RRRRRR Vertical Rows/Frame

R R R R R R	NO. OF ROWS/FRAME
0 0 0 0 0 0	1
0 0 0 0 0 1	2
0 0 0 0 1 0	3
. . .	.
1 1 1 1 1 1	64

Parameter—UUUU Underline Placement

U U U U	LINE NUMBER OF UNDERLINE
0 0 0 0	1
0 0 0 1	2
0 0 1 0	3
. . .	.
1 1 1 1	16

Parameter—LLLL Number of Lines per Character Row

L L L L	NO. OF LINES/ROW
0 0 0 0	1
0 0 0 1	2
0 0 1 0	3
. . .	.
1 1 1 1	16

Parameter—M Line Counter Mode

M	LINE COUNTER MODE
0	Mode 0 (Non-Offset)
1	Mode 1 (Offset by 1 Count)

Parameter—CC Cursor Format

C C	CURSOR FORMAT
0 0	Blinking reverse video block
0 1	Blinking underline
1 0	Non-blinking reverse video block
1 1	Non-blinking underline

Parameter—ZZZZ Horizontal Retrace Count

Z Z Z Z	NO. OF CHARACTER COUNTS PER HRTC
0 0 0 0	2
0 0 0 1	4
0 0 1 0	6
.	.
.	.
.	.
1 1 1 1	32

Note: uuuu MSB determines blanking of top and bottom lines (1 = blanked, 0 = not blanked).

2. START DISPLAY COMMAND

	OPERATION	C/P	DESCRIPTION	DATA BUS MSB LSB
Command	Write	1	Start Display	0 0 1 0 0 0 0 0
No parameters				

Action—8276 interrupts are enabled, BRDY goes active, video is enabled, Interrupt Enable and Video Enable status flags are set.

3. STOP DISPLAY COMMAND

	OPERATION	C/P	DESCRIPTION	DATA BUS MSB LSB
Command	Write	1	Stop Display	0 1 0 0 0 0 0 0
No parameters				

Action—Disables video, interrupts remain enabled, HRTC and VRTC continue to run, Video Enable status flag is reset, and the "Start Display" command must be given to reenable the display.

4. LOAD CURSOR POSITION

	OPERATION	C/P	DESCRIPTION	DATA BUS MSB LSB
Command	Write	1	Load Cursor	1 0 0 0 0 0 0 0
Parameters	Write Write	0 0	Char. Number Row Number	(Char. Position in Row) (Row Number)

Action—The 8276 is conditioned to place the next two parameter bytes into the cursor position registers. Status flag not affected.

5. ENABLE INTERRUPT COMMAND

	OPERATION	C/P	DESCRIPTION	DATA BUS MSB LSB
Command	Write	1	Enable Interrupt	1 0 1 0 0 0 0 0
No parameters				

Action—The interrupt enable flag is set and interrupts are enabled.

6. DISABLE INTERRUPT COMMAND

	OPERATION	C/P	DESCRIPTION	DATA BUS MSB LSB
Command	Write	1	Disable Interrupt	1 1 0 0 0 0 0 0
No parameters				

Action—Interrupts are disabled and the interrupt enable status flag is reset.

7. PRESET COUNTERS COMMAND

	OPERATION	C/P	DESCRIPTION	DATA BUS MSB LSB
Command	Write	1	Preset Counters	1 1 1 0 0 0 0 0
No parameters				

Action—The internal timing counters are preset, corresponding to a screen display position at the top left corner. Two character clocks are required for this operation. The counters will remain in this state until any other command is given.

This command is useful for system debug and synchronization of clustered CRT displays on a single CPU.

Status Flags

	OPERATION	C/P	DESCRIPTION	DATA BUS MSB LSB
Command	Read	1	Status Word	0 IE IR X IC VE BU X

IE — (Interrupt Enable) Set or reset by command. It enables vertical retrace interrupt. It is automatically set by a "Start Display" command and reset with the "Reset" command.

IR — (Interrupt Request) This flag is set at the beginning of display of the last row of the frame if the interrupt enable flag is set. It is reset after a status read operation.

IC — (Improper Command) This flag is set when a command parameter string is too long or too short. The flag is automatically reset after a status read.

VE — (Video Enable) This flag indicates that video operation of the CRT is enabled. This flag is set on a "Start Display" command, and reset on a "Stop Display" or "Reset" command.

BU — (Buffer Underrun) This flag is set whenever a Row Buffer is not filled with character data in time for a buffer swap required by the display. Upon activation of this bit, buffer loading ceases, and the screen is blanked until after the vertical retrace interval.

ABSOLUTE MAXIMUM RATINGS*

Ambient Temperature Under Bias .... 0°C to 70°C
Storage Temperature ..... −65°C to +150°C
Voltage On Any Pin
With Respect to Ground ..... −0.5V to +7V
Power Dissipation ..... 1 Watt

*NOTICE: Stresses above those listed under "Absolute Maximum Ratings" may cause permanent damage to the device. This is a stress rating only and functional operation of the device at these or any other conditions above those indicated in the operational sections of this specification is not implied.

D.C. CHARACTERISTICS (T_A = 0°C to 70°C; V_{CC} = 5V ±5%)

SYMBOL	PARAMETER	MIN.	MAX.	UNITS	TEST CONDITIONS
V_{IL}	Input Low Voltage	−0.5	0.8	V	
V_{IH}	Input High Voltage	2.0	V_{CC} + 0.5V	V	
V_{OL}	Output Low Voltage		0.45	V	I_{OL} = 2.2 mA
V_{OH}	Output High Voltage	2.4		V	I_{OH} = −400 μA
I_{IL}	Input Load Current		±10	μA	V_{IN} = V_{CC} to 0V
I_{OFL}	Output Float Leakage		±10	μA	V_{OUT} = V_{CC} to 0.45V
I_{CC}	V_{CC} Supply Current		160	mA	

CAPACITANCE (T_A = 25°C; V_{CC} = GND = 0V)

SYMBOL	PARAMETER	MIN.	MAX.	UNITS	TEST CONDITIONS
C_{IN}	Input Capacitance		10	pF	f_C = 1 MHz
$C_{I/O}$	I/O Capacitance		20	pF	Unmeasured pins returned to V_{SS}.

A.C. TESTING LOAD CIRCUIT

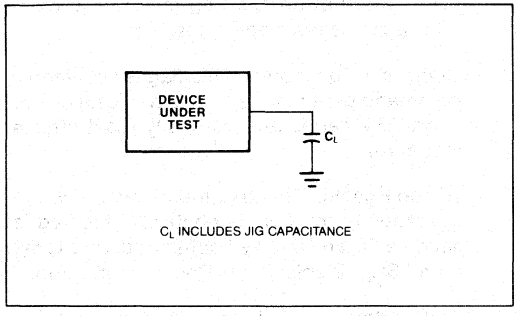

A.C. CHARACTERISTICS (T_A = 0°C to 70°C; V_{CC} = 5.0V ±5%; GND = 0V)

Bus Parameters

READ CYCLE

Symbol	Parameter	Min.	Max.	Units	Test Conditions
t_{AR}	Address Stable Before READ	0		ns	
t_{RA}	Address Hold Time for READ	0		ns	
t_{RR}	READ Pulse Width	250		ns	
t_{RD}	Data Delay from READ		200	ns	C_L = 150pF
t_{DF}	READ to Data Floating	20	100	ns	

WRITE CYCLE

Symbol	Parameter	Min.	Max.	Units	Test Conditions
t_{AW}	Address Stable Before WRITE	0		ns	
t_{WA}	Address Hold Time for WRITE	0		ns	
t_{WW}	WRITE Pulse Width	250		ns	
t_{DW}	Data Setup Time for WRITE	150		ns	
t_{WD}	Data Hold Time for WRITE	0		ns	

CLOCK TIMING

		8276		8276-2			
Symbol	Parameter	Min.	Max.	Min.	Max.	Units	Test Conditions
t_{CLK}	Clock Period	480		320		ns	
t_{KH}	Clock High	240		120		ns	
t_{KL}	Clock Low	160		120		ns	
t_{KR}	Clock Rise	5	30	5	30	ns	
t_{KF}	Clock Fall	5	30	5	30	ns	

OTHER TIMING

		8276		8276-2			
Symbol	Parameter	Min.	Max.	Min.	Max.	Units	Test Conditions
t_{CC}	Character Code Output Delay		150		150	ns	CL = 50 pF
t_{HR}	Horizontal Retrace Output Delay		200		150	ns	C_L = 50 pF
t_{LC}	Line Count Output Delay		400		250	ns	C_L = 50 pF
t_{AT}	Control/Attribute Output Delay		275		250	ns	C_L = 50 pF
t_{VR}	Vertical Retrace Output Delay		275		250	ns	C_L = 50 pF
t_{RI}	INT↓ from $\overline{RD}$↑		250		250	ns	C_L = 50 pF
t_{WQ}	BRDY↑ from $\overline{WR}$↑		250		250	ns	C_L = 50 pF
t_{RQ}	BRDY↓ from $\overline{WR}$↓		200		200	ns	C_L = 50 pF
t_{LR}	$\overline{BS}$↓ to $\overline{WR}$↓	0		0		ns	
t_{RL}	$\overline{WR}$↑ to $\overline{BS}$↑	0		0		ns	

WAVEFORMS

Typical Dot Level Timing

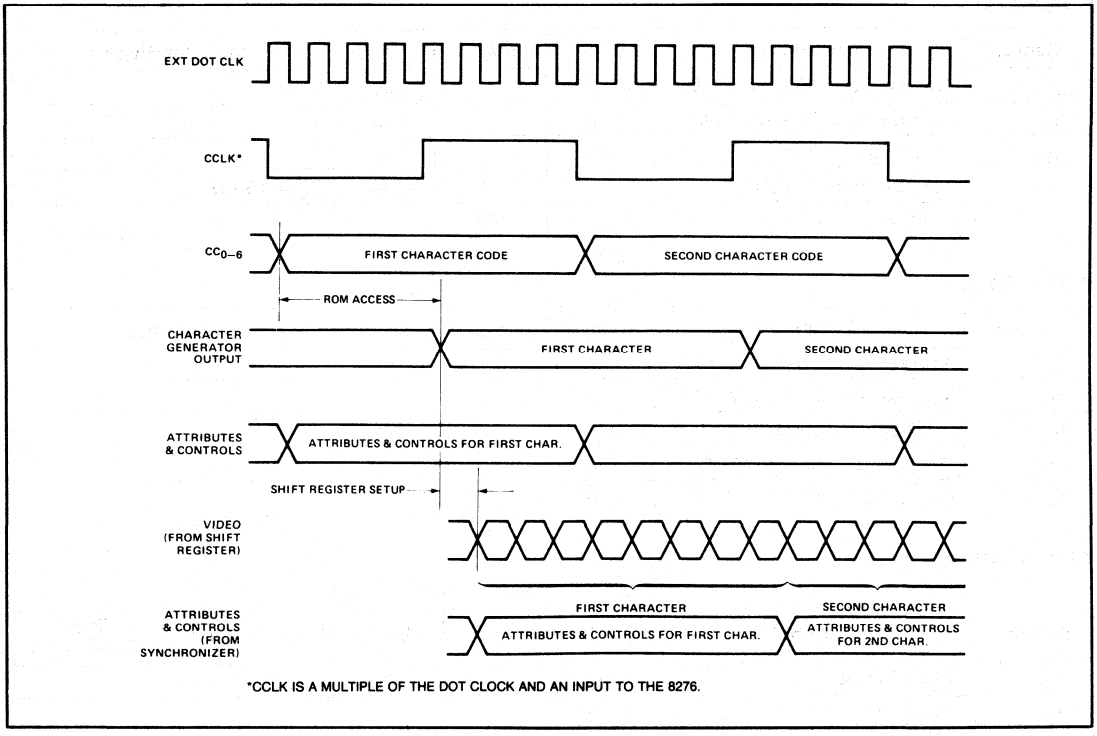

*CCLK IS A MULTIPLE OF THE DOT CLOCK AND AN INPUT TO THE 8276.

Line Timing

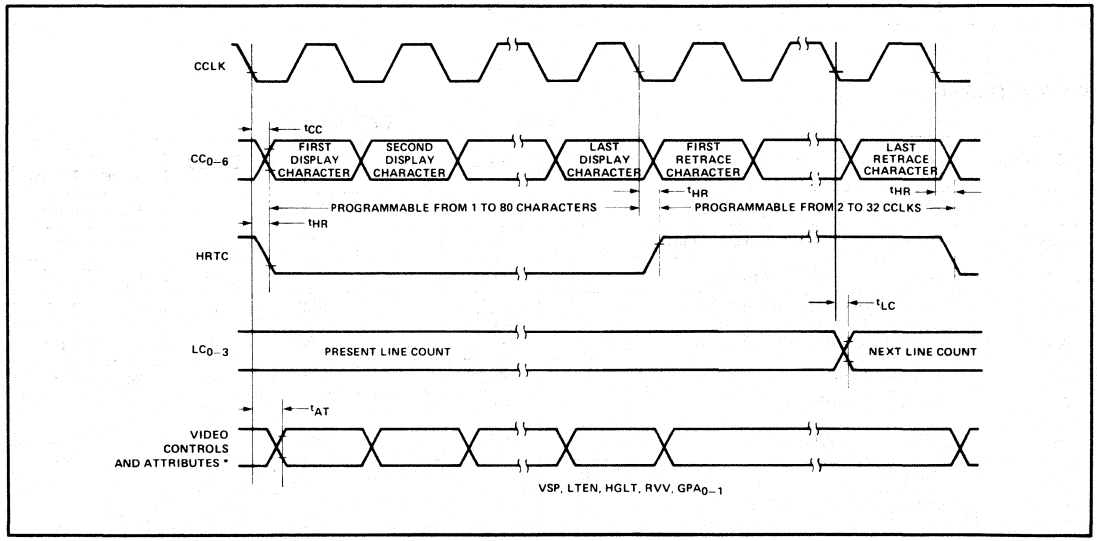

Row Timing

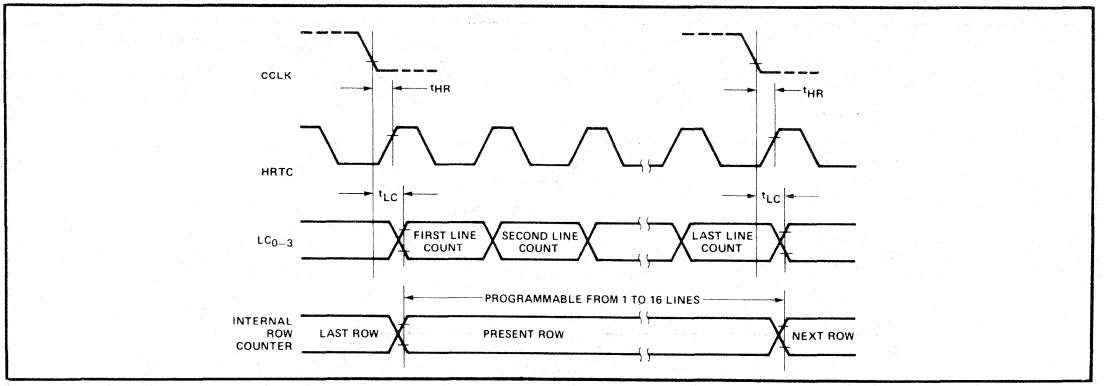

Frame Timing

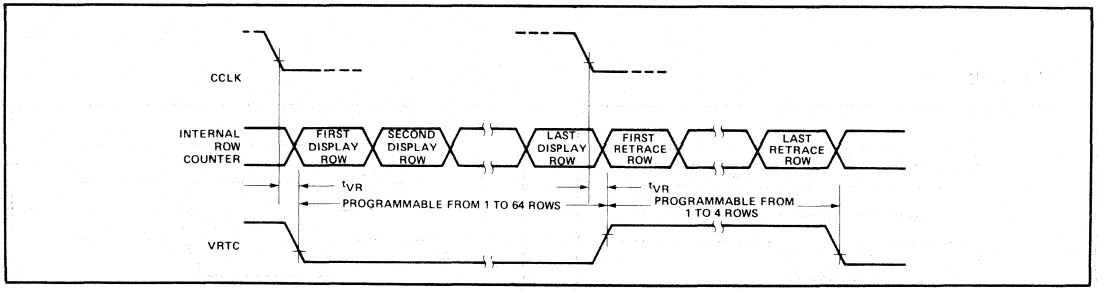

Interrupt Timing

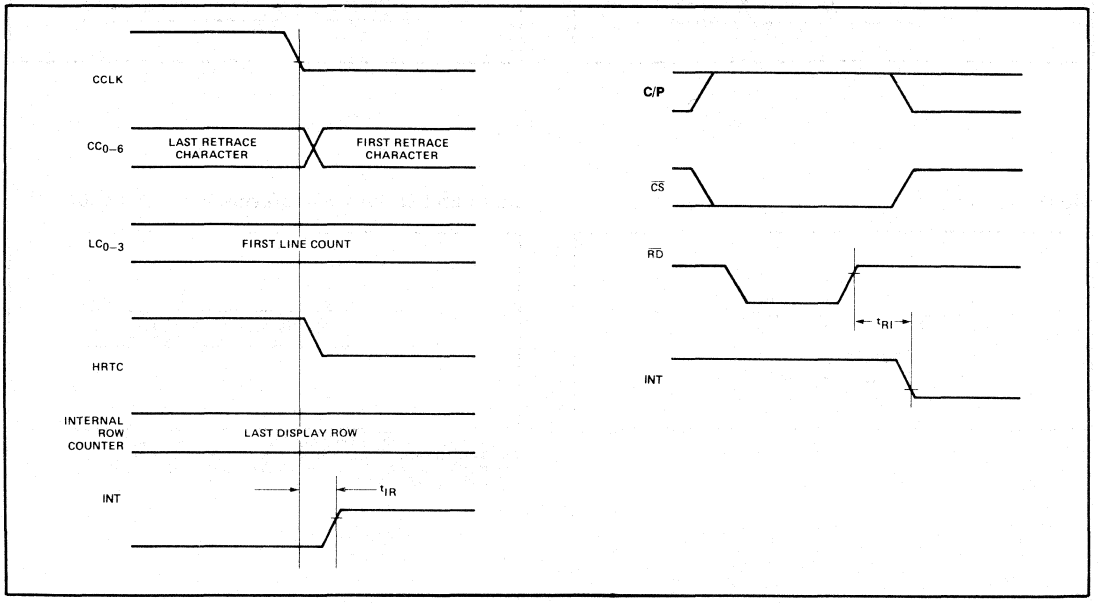

Timing for Buffer Loading

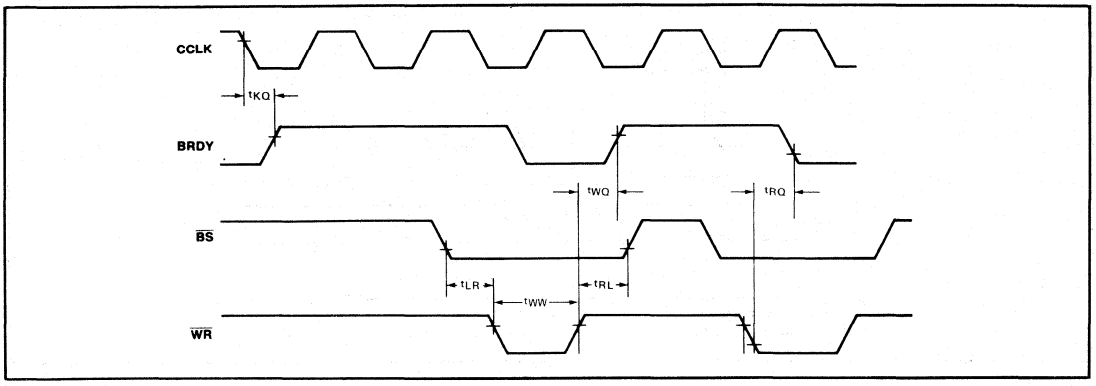

Write Timing

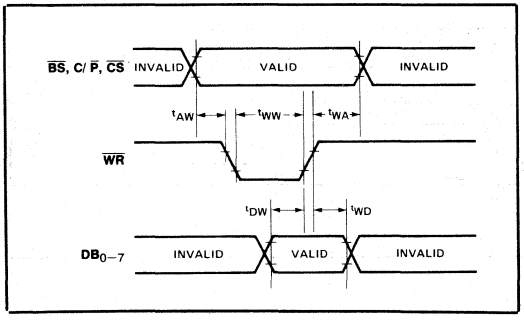

Read Timing

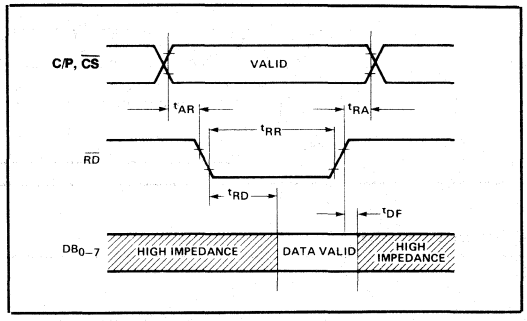

Clock Timing

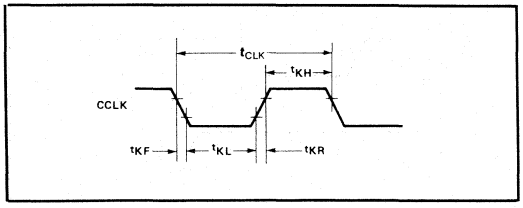

Input and Output Waveforms for A.C. Tests

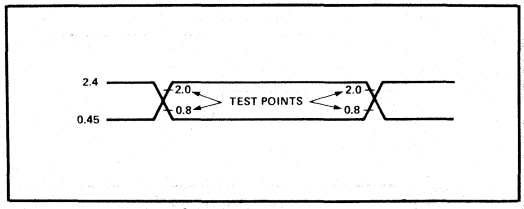

FOR A.C. TESTING, INPUTS ARE DRIVEN AT 2.4V FOR A LOGIC "1" AND 0.45V FOR A LOGIC "0." TIMING MEASUREMENTS FOR INPUT AND OUTPUT SIGNALS ARE MADE AT 2.0V FOR A LOGIC "1" AND 0.8V FOR A LOGIC "0."

8279/8279-5
PROGRAMMABLE KEYBOARD/DISPLAY INTERFACE

- **MCS-85™ Compatible 8279-5**
- **Simultaneous Keyboard Display Operations**
- **Scanned Keyboard Mode**
- **Scanned Sensor Mode**
- **Strobed Input Entry Mode**
- **8-Character Keyboard FIFO**
- **2-Key Lockout or N-Key Rollover with Contact Debounce**
- **Dual 8- or 16-Numerical Display**
- **Single 16-Character Display**
- **Right or Left Entry 16-Byte Display RAM**
- **Mode Programmable from CPU**
- **Programmable Scan Timing**
- **Interrupt Output on Key Entry**

The Intel® 8279 is a general purpose programmable keyboard and display I/O interface device designed for use with Intel® microprocessors. The keyboard portion can provide a scanned interface to a 64-contact key matrix. The keyboard portion will also interface to an array of sensors or a strobed interface keyboard, such as the hall effect and ferrite variety. Key depressions can be 2-key lockout or N-key rollover. Keyboard entries are debounced and strobed in an 8-character FIFO. If more than 8 characters are entered, overrun status is set. Key entries set the interrupt output line to the CPU.

The display portion provides a scanned display interface for LED, incandescent, and other popular display technologies. Both numeric and alphanumeric segment displays may be used as well as simple indicators. The 8279 has 16X8 display RAM which can be organized into dual 16X4. The RAM can be loaded or interrogated by the CPU. Both right entry, calculator and left entry typewriter display formats are possible. Both read and write of the display RAM can be done with auto-increment of the display RAM address.

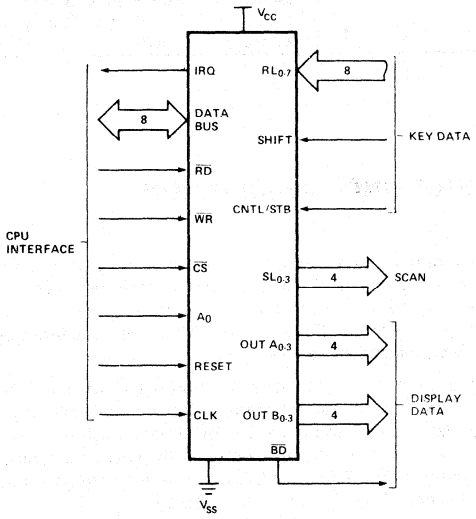

Figure 1. Logic Symbol

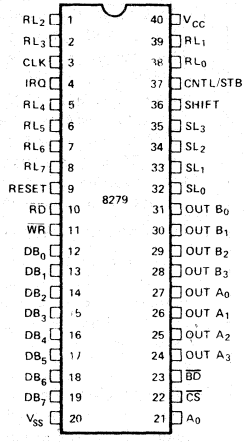

Figure 2. Pin Configuration

HARDWARE DESCRIPTION

The 8279 is packaged in a 40 pin DIP. The following is a functional description of each pin.

Table 1. Pin Descriptions

Symbol	Pin No.	Name and Function
DB_0-DB_7	8	**Bi-directional data bus:** All data and commands between the CPU and the 8279 are transmitted on these lines.
CLK	1	**Clock:** Clock from system used to generate internal timing.
RESET	1	**Reset:** A high signal on this pin resets the 8279. After being reset the 8279 is placed in the following mode: 1) 16 8-bit character display —left entry. 2) Encoded scan keyboard—2 key lockout. Along with this the program clock prescaler is set to 31.
CS	1	**Chip Select:** A low on this pin enables the interface functions to receive or transmit.
A_0	1	**Buffer Address:** A high on this line indicates the signals in or out are interpreted as a command or status. A low indicates that they are data.
$\overline{RD}$, $\overline{WR}$	2	**Input/Output Read and Write:** These signals enable the data buffers to either send data to the external bus or receive it from the external bus.
IRQ	1	**Interrupt Request:** In a keyboard mode, the interrupt line is high when there is data in the FIFO/Sensor RAM. The interrupt line goes low with each FIFO/Sensor RAM read and returns high if there is still information in the RAM. In a sensor mode, the interrupt line goes high whenever a change in a sensor is detected.
V_{SS}, V_{CC}	2	**Ground and power supply pins.**
SL_0-SL_3	4	**Scan Lines:** Scan lines which are used to scan the key switch or sensor matrix and the display digits. These lines can be either encoded (1 of 16) or decoded (1 of 4).
RL_0-RL_7	8	**Return Line:** Return line inputs which are connected to the scan lines through the keys or sensor switches. They have active internal pullups to keep them high until a switch closure pulls one low. They also serve as an 8-bit input in the Strobed Input mode.
SHIFT	1	**Shift:** The shift input status is stored along with the key position on key closure in the Scanned Keyboard modes. It has an active internal pullup to keep it high until a switch closure pulls it low.
CNTL/STB	1	**Control/Strobed Input Mode:** For keyboard modes this line is used as a control input and stored like status on a key closure. The line is also the strobe line that enters the data into the FIFO in the Strobed Input mode. (Rising Edge). It has an active internal pullup to keep it high until a switch closure pulls it low.
OUT A_0–OUT A_3 OUT B_0–OUT B_3	4 4	**Outputs:** These two ports are the outputs for the 16 x 4 display refresh registers. The data from these outputs is synchronized to the scan lines (SL_0–SL_3) for multiplexed digit displays. The two 4 bit ports may be blanked independently. These two ports may also be considered as one 8-bit port.
$\overline{BD}$	1	**Blank Display:** This output is used to blank the display during digit switching or by a display blanking command.

FUNCTIONAL DESCRIPTION

Since data input and display are an integral part of many microprocessor designs, the system designer needs an interface that can control these functions without placing a large load on the CPU. The 8279 provides this function for 8-bit microprocessors.

The 8279 has two sections: keyboard and display. The keyboard section can interface to regular typewriter style keyboards or random toggle or thumb switches. The display section drives alphanumeric displays or a bank of indicator lights. Thus the CPU is relieved from scanning the keyboard or refreshing the display.

The 8279 is designed to directly connect to the microprocessor bus. The CPU can program all operating modes for the 8279. These modes include:

Input Modes

- Scanned Keyboard — with encoded (8 x 8 key keyboard) or decoded (4 x 8 key keyboard) scan lines. A key depression generates a 6-bit encoding of key position. Position and shift and control status are stored in the FIFO. Keys are automatically debounced with 2-key lockout or N-key rollover.
- Scanned Sensor Matrix — with encoded (8 x 8 matrix switches) or decoded (4 x 8 matrix switches) scan lines. Key status (open or closed) stored in RAM addressable by CPU.
- Strobed Input — Data on return lines during control line strobe is transferred to FIFO.

Output Modes

- 8 or 16 character multiplexed displays that can be organized as dual 4-bit or single 8-bit ($B_0 = D_0$, $A_3 = D_7$).
- Right entry or left entry display formats.

Other features of the 8279 include:

- Mode programming from the CPU.
- Clock Prescaler
- Interrupt output to signal CPU when there is keyboard or sensor data available.
- An 8 byte FIFO to store keyboard information.
- 16 byte internal Display RAM for display refresh. This RAM can also be read by the CPU.

PRINCIPLES OF OPERATION

The following is a description of the major elements of the 8279 Programmable Keyboard/Display interface device. Refer to the block diagram in Figure 3.

I/O Control and Data Buffers

The I/O control section uses the $\overline{CS}$, A_0, $\overline{RD}$ and $\overline{WR}$ lines to control data flow to and from the various internal registers and buffers. All data flow to and from the 8279 is enabled by $\overline{CS}$. The character of the information, given or desired by the CPU, is identified by A_0. A logic one means the information is a command or status. A logic zero means the information is data. $\overline{RD}$ and $\overline{WR}$ determine the direction of data flow through the Data Buffers. The Data Buffers are bi-directional buffers that connect the internal bus to the external bus. When the chip is not selected ($\overline{CS}$ = 1), the devices are in a high impedance state. The drivers input during $\overline{WR} \bullet \overline{CS}$ and output during $\overline{RD} \bullet \overline{CS}$.

Control and Timing Registers and Timing Control

These registers store the keyboard and display modes and other operating conditions programmed by the CPU. The modes are programmed by presenting the proper command on the data lines with $A_0 = 1$ and then sending a $\overline{WR}$. The command is latched on the rising edge of $\overline{WR}$.

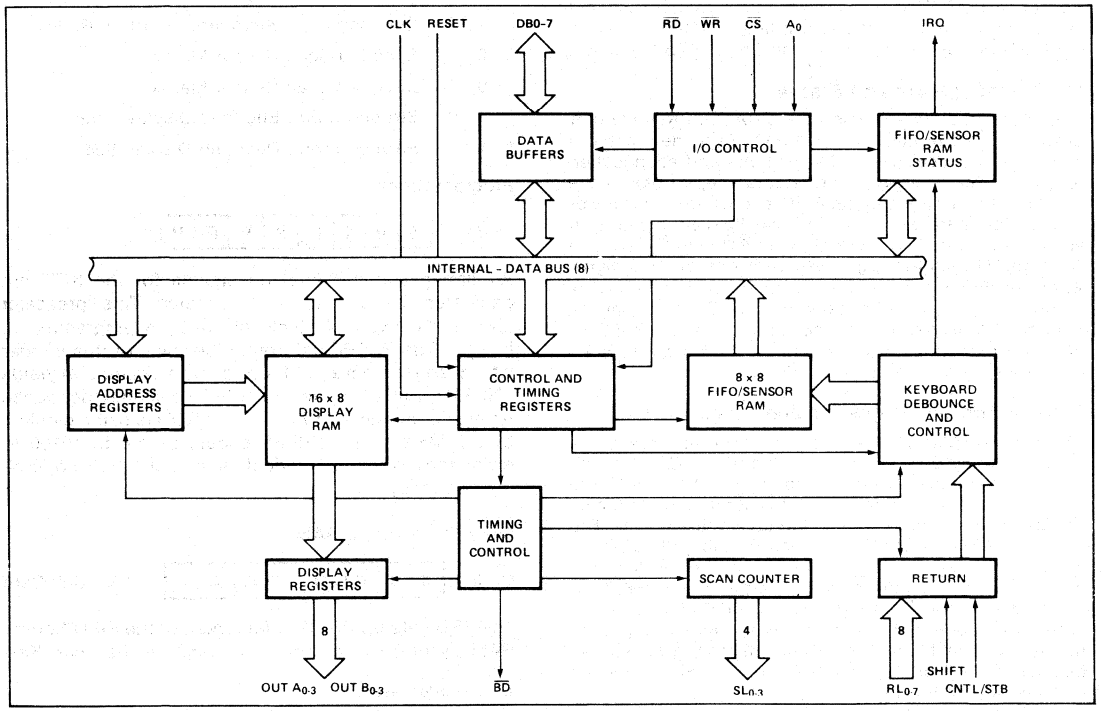

Figure 3. Internal Block Diagram

The command is then decoded and the appropriate function is set. The timing control contains the basic timing counter chain. The first counter is a ÷ N prescaler that can be programmed to yield an internal frequency of 100 kHz which gives a 5.1 ms keyboard scan time and a 10.3 ms debounce time. The other counters divide down the basic internal frequency to provide the proper key scan, row scan, keyboard matrix scan, and display scan times.

Scan Counter

The scan counter has two modes. In the encoded mode, the counter provides a binary count that must be externally decoded to provide the scan lines for the keyboard and display. In the decoded mode, the scan counter decodes the least significant 2 bits and provides a decoded 1 of 4 scan. Note than when the keyboard is in decoded scan, so is the display. This means that only the first 4 characters in the Display RAM are displayed.

In the encoded mode, the scan lines are active high outputs. In the decoded mode, the scan lines are active low outputs.

Return Buffers and Keyboard Debounce and Control

The 8 return lines are buffered and latched by the Return Buffers. In the keyboard mode, these lines are scanned, looking for key closures in that row. If the debounce circuit detects a closed switch, it waits about 10 msec to check if the switch remains closed. If it does, the address of the switch in the matrix plus the status of SHIFT and CONTROL are transferred to the FIFO. In the scanned Sensor Matrix modes, the contents of the return lines is directly transferred to the corresponding row of the Sensor RAM (FIFO) each key scan time. In Strobed Input mode, the contents of the return lines are transferred to the FIFO on the rising edge of the CNTL/STB line pulse.

FIFO/Sensor RAM and Status

This block is a dual function 8 x 8 RAM. In Keyboard or Strobed Input modes, it is a FIFO. Each new entry is written into successive RAM positions and each is then read in order of entry. FIFO status keeps track of the number of characters in the FIFO and whether it is full or empty. Too many reads or writes will be recognized as an error. The status can be read by an $\overline{RD}$ with $\overline{CS}$ low and A_0 high. The status logic also provides an IRQ signal when the FIFO is not empty. In Scanned Sensor Matrix mode, the memory is a Sensor RAM. Each row of the Sensor RAM is loaded with the status of the corresponding row of sensor in the sensor matrix. In this mode, IRQ is high if a change in a sensor is detected.

Display Address Registers and Display RAM

The Display Address Registers hold the address of the word currently being written or read by the CPU and the two 4-bit nibbles being displayed. The read/write addresses are programmed by CPU command. They also can be set to auto increment after each read or write. The Display RAM can be directly read by the CPU after the correct mode and address is set. The addresses for the A and B nibbles are automatically updated by the 8279 to match data entry by the CPU. The A and B nibbles can be entered independently or as one word, according to the mode that is set by the CPU. Data entry to the display can be set to either left or right entry. See Interface Considerations for details.

SOFTWARE OPERATION

8279 commands

The following commands program the 8279 operating modes. The commands are sent on the Data Bus with $\overline{CS}$ low and A_0 high and are loaded to the 8279 on the rising edge of $\overline{WR}$.

Keyboard/Display Mode Set

	MSB							LSB
Code:	0	0	0	D	D	K	K	K

Where DD is the Display Mode and KKK is the Keyboard Mode.

DD

0	0	8 8-bit character display — Left entry
0	1	16 8-bit character display — Left entry*
1	0	8 8-bit character display — Right entry
1	1	16 8-bit character display — Right entry

For description of right and left entry, see Interface Considerations. Note that when decoded scan is set in keyboard mode, the display is reduced to 4 characters independent of display mode set.

KKK

0	0	0	Encoded Scan Keyboard — 2 Key Lockout*
0	0	1	Decoded Scan Keyboard — 2-Key Lockout
0	1	0	Encoded Scan Keyboard — N-Key Rollover
0	1	1	Decoded Scan Keyboard — N-Key Rollover
1	0	0	Encoded Scan Sensor Matrix
1	0	1	Decoded Scan Sensor Matrix
1	1	0	Strobed Input, Encoded Display Scan
1	1	1	Strobed Input, Decoded Display Scan

Program Clock

Code:	0	0	1	P	P	P	P	P

All timing and multiplexing signals for the 8279 are generated by an internal prescaler. This prescaler divides the external clock (pin 3) by a programmable integer. Bits PPPPP determine the value of this integer which ranges from 2 to 31. Choosing a divisor that yields 100 kHz will give the specified scan and debounce times. For instance, if Pin 3 of the 8279 is being clocked by a 2 MHz signal, PPPPP should be set to 10100 to divide the clock by 20 to yield the proper 100 kHz operating frequency.

Read FIFO/Sensor RAM

Code:	0	1	0	AI	X	A	A	A	X = Don't Care

The CPU sets up the 8279 for a read of the FIFO/Sensor RAM by first writing this command. In the Scan Key-

*Default after reset.

board Mode, the Auto-Increment flag (AI) and the RAM address bits (AAA) are irrelevant. The 8279 will automatically drive the data bus for each subsequent read ($A_0 = 0$) in the same sequence in which the data first entered the FIFO. All subsequent reads will be from the FIFO until another command is issued.

In the Sensor Matrix Mode, the RAM address bits AAA select one of the 8 rows of the Sensor RAM. If the AI flag is set (AI = 1), each successive read will be from the subsequent row of the sensor RAM.

Read Display RAM

Code:

0	1	1	AI	A	A	A	A

The CPU sets up the 8279 for a read of the Display RAM by first writing this command. The address bits AAAA select one of the 16 rows of the Display RAM. If the AI flag is set (AI = 1), this row address will be incremented after each following read *or write* to the Display RAM. Since the same counter is used for both reading and writing, this command sets the next read *or write* address and the sense of the Auto-Increment mode for both operations.

Write Display RAM

Code:

1	0	0	AI	A	A	A	A

The CPU sets up the 8279 for a write to the Display RAM by first writing this command. After writing the command with $A_0 = 1$, all subsequent writes with $A_0 = 0$ will be to the Display RAM. The addressing and Auto-Increment functions are identical to those for the Read Display RAM. However, this command does not affect the source of subsequent Data Reads; the CPU will read from whichever RAM (Display or FIFO/Sensor) which was last specified. If, indeed, the Display RAM was last specified, the Write Display RAM will, nevertheless, change the next Read location.

Display Write Inhibit/Blanking

Code:

				A	B	A	B
1	0	1	X	IW	IW	BL	BL

The IW Bits can be used to mask nibble A and nibble B in applications requiring separate 4-bit display ports. By setting the IW flag (IW = 1) for one of the ports, the port becomes marked so that entries to the Display RAM from the CPU do not affect that port. Thus, if each nibble is input to a BCD decoder, the CPU may write a digit to the Display RAM without affecting the other digit being displayed. It is important to note that bit B_0 corresponds to bit D_0 on the CPU bus, and that bit A_3 corresponds to bit D_7.

If the user wishes to blank the display, the BL flags are available for each nibble. The last Clear command issued determines the code to be used as a "blank." This code defaults to all zeros after a reset. Note that both BL flags must be set to blank a display formatted with a single 8-bit port.

Clear

Code:

1	1	0	C_D	C_D	C_D	C_F	C_A

The C_D bits are available in this command to clear all rows of the Display RAM to a selectable blanking code as follows:

C_D C_D C_D	
0 X	All Zeros (X = Don't Care)
1 0	AB = Hex 20 (0010 0000)
1 1	All Ones

Enable clear display when = 1 (or by C_A = 1)

During the time the Display RAM is being cleared (~160 μs), it may not be written to. The most significant bit of the FIFO status word is set during this time. When the Display RAM becomes available again, it automatically resets.

If the C_F bit is asserted ($C_F = 1$), the FIFO status is cleared and the interrupt output line is reset. Also, the Sensor RAM pointer is set to row 0.

C_A, the Clear All bit, has the combined effect of C_D and C_F; it uses the C_D clearing code on the Display RAM and also clears FIFO status. Furthermore, it resynchronizes the internal timing chain.

End Interrupt/Error Mode Set

Code:

1	1	1	E	X	X	X	X

X = Don't care.

For the sensor matrix modes this command lowers the IRQ line and enables further writing into RAM. (The IRQ line would have been raised upon the detection of a change in a sensor value. This would have also inhibited further writing into the RAM until reset).

For the N-key rollover mode — if the E bit is programmed to "1" the chip will operate in the special Error mode. (For further details, see Interface Considerations Section.)

Status Word

The status word contains the FIFO status, error, and display unavailable signals. This word is read by the CPU when A_0 is high and $\overline{CS}$ and $\overline{RD}$ are low. See Interface Considerations for more detail on status word.

Data Read

Data is read when A_0, $\overline{CS}$ and $\overline{RD}$ are all low. The source of the data is specified by the Read FIFO or Read Display commands. The trailing edge of $\overline{RD}$ will cause the address of the RAM being read to be incremented if the Auto-Increment flag is set. FIFO reads always increment (if no error occurs) independent of AI.

Data Write

Data that is written with A_0, $\overline{CS}$ and $\overline{WR}$ low is always written to the Display RAM. The address is specified by the latest Read Display or Write Display command. Auto-Incrementing on the rising edge of $\overline{WR}$ occurs if AI set by the latest display command.

INTERFACE CONSIDERATIONS

Scanned Keyboard Mode, 2-Key Lockout

There are three possible combinations of conditions that can occur during debounce scanning. When a key is depressed, the debounce logic is set. Other depressed keys are looked for during the next two scans. If none are encountered, it is a single key depression and the key position is entered into the FIFO along with the status of CNTL and SHIFT lines. If the FIFO was empty, IRQ will be set to signal the CPU that there is an entry in the FIFO. If the FIFO was full, the key will not be entered and the error flag will be set. If another closed switch is encountered, no entry to the FIFO can occur. If all other keys are released before this one, then it will be entered to the FIFO. If this key is released before any other, it will be entirely ignored. A key is entered to the FIFO only once per depression, no matter how many keys were pressed along with it or in what order they were released. If two keys are depressed within the debounce cycle, it is a simultaneous depression. Neither key will be recognized until one key remains depressed alone. The last key will be treated as a single key depression.

Scanned Keyboard Mode, N-Key Rollover

With N-key Rollover each key depression is treated independently from all others. When a key is depressed, the debounce circuit waits 2 keyboard scans and then checks to see if the key is still down. If it is, the key is entered into the FIFO. Any number of keys can be depressed and another can be recognized and entered into the FIFO. If a simultaneous depression occurs, the keys are recognized and entered according to the order the keyboard scan found them.

Scanned Keyboard — Special Error Modes

For N-key rollover mode the user can program a special error mode. This is done by the "End Interrupt/Error Mode Set" command. The debounce cycle and key-validity check are as in normal N-key mode. If during a single debounce cycle, two keys are found depressed, this is considered a simultaneous multiple depression, and sets an error flag. This flag will prevent any further writing into the FIFO and will set interrupt (if not yet set). The error flag could be read in this mode by reading the FIFO STATUS word. (See "FIFO STATUS" for further details.) The error flag is reset by sending the normal CLEAR command with $C_F = 1$.

Sensor Matrix Mode

In Sensor Matrix mode, the debounce logic is inhibited. The status of the sensor switch is inputted directly to the Sensor RAM. In this way the Sensor RAM keeps an image of the state of the switches in the sensor matrix. Although debouncing is not provided, this mode has the advantage that the CPU knows how long the sensor was closed and when it was released. A keyboard mode can only indicate a validated closure. To make the software easier, the designer should functionally group the sensors by row since this is the format in which the CPU will read them.

The IRQ line goes high if any sensor value change is detected at the end of a sensor matrix scan. The IRQ line is cleared by the first data read operation if the Auto-Increment flag is set to zero, or by the End Interrupt command if the Auto-Increment flag is set to one.

Note: Multiple changes in the matrix Addressed by ($SL_{0-3} = 0$) may cause multiple interrupts. ($SL_0 = 0$ in the Decoded Mode). Reset may cause the 8279 to see multiple changes.

Data Format

In the Scanned Keyboard mode, the character entered into the FIFO corresponds to the position of the switch in the keyboard plus the status of the CNTL and SHIFT lines (non-inverted). CNTL is the MSB of the character and SHIFT is the next most significant bit. The next three bits are from the scan counter and indicate the row the key was found in. The last three bits are from the column counter and indicate to which return line the key was connected.

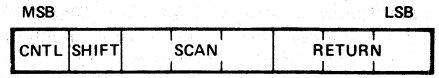

SCANNED KEYBOARD DATA FORMAT

In Sensor Matrix mode, the data on the return lines is entered directly in the row of the Sensor RAM that corresponds to the row in the matrix being scanned. Therefore, each switch postion maps directly to a Sensor RAM position. The SHIFT and CNTL inputs are ignored in this mode. Note that switches are not necessarily the only thing that can be connected to the return lines in this mode. Any logic that can be triggered by the scan lines can enter data to the return line inputs. Eight multiplexed input ports could be tied to the return lines and scanned by the 8279.

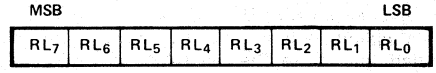

In Strobed Input mode, the data is also entered to the FIFO from the return lines. The data is entered by the rising edge of a CNTL/STB line pulse. Data can come from another encoded keyboard or simple switch matrix. The return lines can also be used as a general purpose strobed input.

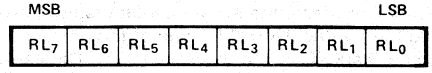

Display

Left Entry

Left Entry mode is the simplest display format in that each display position directly corresponds to a byte (or nibble) in the Display RAM. Address 0 in the RAM is the left-most display character and address 15 (or address 7 in 8 character display) is the right most display character. Entering characters from position zero causes the display to fill from the left. The 17th (9th) character is entered back in the left most position and filling again proceeds from there.

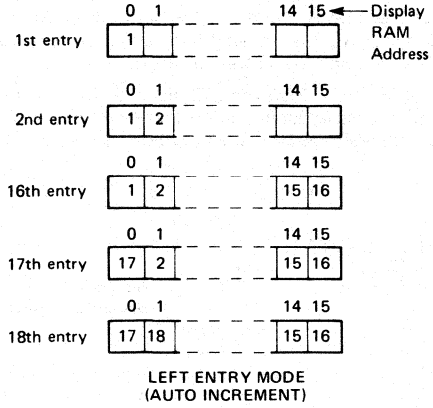

LEFT ENTRY MODE
(AUTO INCREMENT)

Right Entry

Right entry is the method used by most electronic calculators. The first entry is placed in the right most display character. The next entry is also placed in the right most character after the display is shifted left one character. The left most character is shifted off the end and is lost.

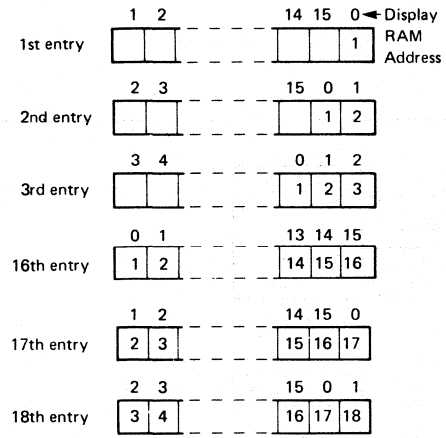

RIGHT ENTRY MODE
(AUTO INCREMENT)

Note that now the display position and register address do not correspond. Consequently, entering a character to an arbitrary position in the Auto Increment mode may have unexpected results. Entry starting at Display RAM address 0 with sequential entry is recommended.

Auto Increment

In the Left Entry mode, Auto Incrementing causes the address where the CPU will next write to be incremented by one and the character appears in the next location. With non-Auto Incrementing the entry is both to the same RAM address and display position. Entry to an arbitrary address in the Auto Increment mode has no undesirable side effects and the result is predictable:

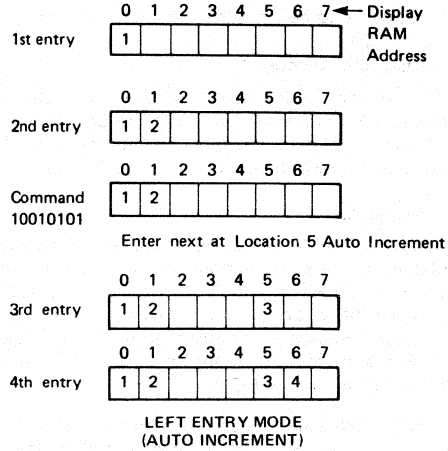

LEFT ENTRY MODE
(AUTO INCREMENT)

In the Right Entry mode, Auto Incrementing and non Incrementing have the same effect as in the Left Entry except if the address sequence is interrupted:

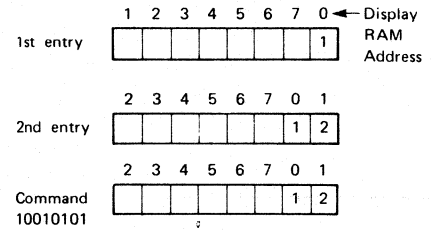

RIGHT ENTRY MODE
(AUTO INCREMENT)

Starting at an arbitrary location operates as shown below:

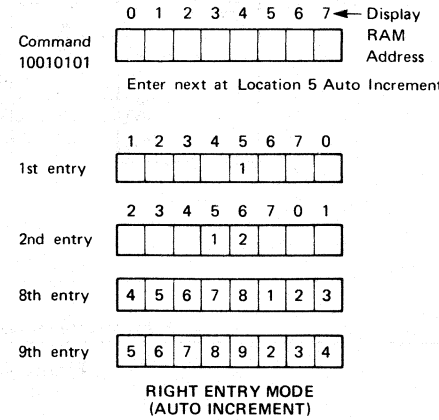

RIGHT ENTRY MODE
(AUTO INCREMENT)

Entry appears to be from the initial entry point.

8/16 Character Display Formats

If the display mode is set to an 8 character display, the on duty-cycle is double what it would be for a 16 character display (e.g., 5.1 ms scan time for 8 characters vs. 10.3 ms for 16 characters with 100 kHz internal frequency).

G. FIFO Status

FIFO status is used in the Keyboard and Strobed Input modes to indicate the number of characters in the FIFO and to indicate whether an error has occurred. There are two types of errors possible: overrun and underrun. Overrun occurs when the entry of another character into a full FIFO is attempted. Underrun occurs when the CPU tries to read an empty FIFO.

The FIFO status word also has a bit to indicate that the Display RAM was unavailable because a Clear Display or Clear All command had not completed its clearing operation.

In a Sensor Matrix mode, a bit is set in the FIFO status word to indicate that at least one sensor closure indication is contained in the Sensor RAM.

In Special Error Mode the S/E bit is showing the error flag and serves as an indication to whether a simultaneous multiple closure error has occurred.

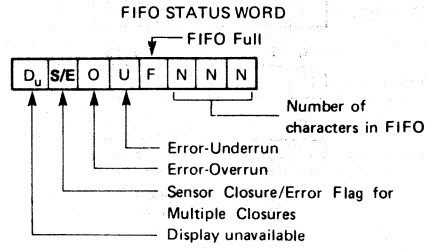

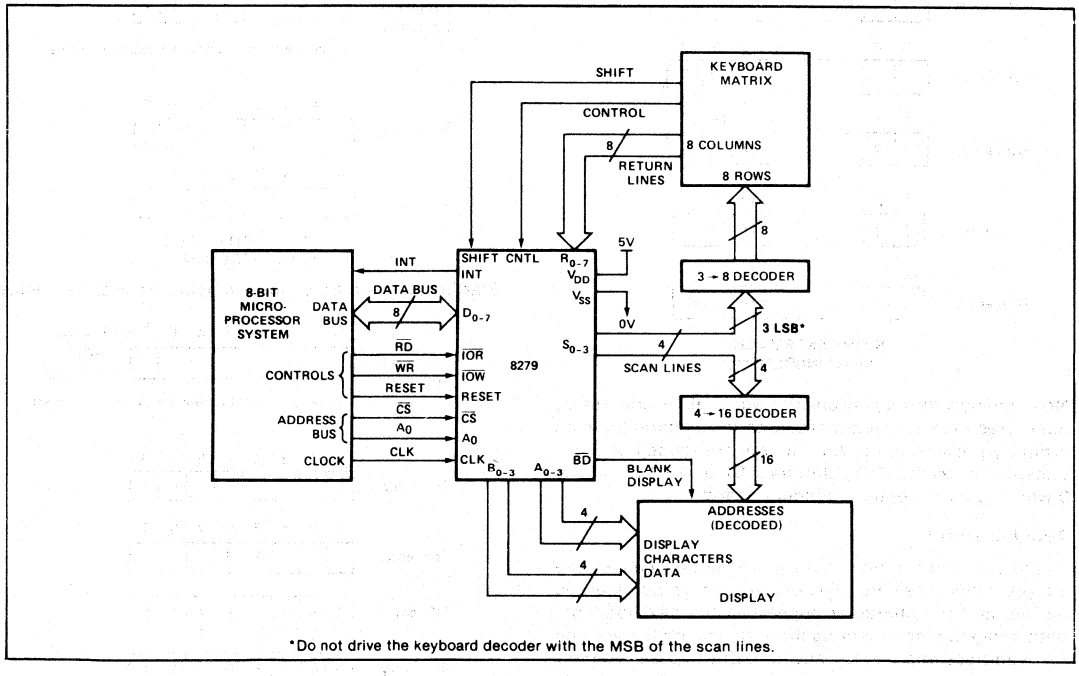

Figure 4. System Block Diagram

ABSOLUTE MAXIMUM RATINGS*

Ambient Temperature . . . . . 0°C to 70°C
Storage Temperature . . . . . -65°C to 125°C
Voltage on any Pin with
Respect to Ground . . . . . -0.5V to +7V
Power Dissipation . . . . . 1 Watt

NOTICE: Stresses above those listed under "Absolute Maximum Ratings" may cause permanent damage to the device. This is a stress rating only and functional operation of the device at these or any other conditions above those indicated in the operational sections of this specification is not implied. Exposure to absolute maximum rating conditions for extended periods may affect device reliability.

D.C. CHARACTERISTICS [T_A = 0°C to 70°C, V_{SS} = V_{CC} = +5V ± 5%, V_{CC} = +5V ±10% (8279-5)]

Symbol	Parameter	Min.	Max.	Unit	Test Conditions
V_{IL1}	Input Low Voltage for Return Lines	-0.5	1.4	V	
V_{IL2}	Input Low Voltage for All Others	-0.5	0.8	V	
V_{IH1}	Input High Voltage for Return Lines	2.2		V	
V_{IH2}	Input High Voltage for All Others	2.0		V	
V_{OL}	Output Low Voltage		0.45	V	Note 1
V_{OH1}	Output High Voltage on Interrupt Line	3.5		V	Note 2
V_{OH2}	Other Outputs	2.4			I_{OH} = −100 μA
I_{IL1}	Input Current on Shift, Control and Return Lines		+10 -100	μA μA	V_{IN} = V_{CC} V_{IN} = 0V
I_{IL2}	Input Leakage Current on All Others		±10	μA	V_{IN} = V_{CC} to 0V
I_{OFL}	Output Float Leakage		±10	μA	V_{OUT} = V_{CC} to 0.45V
I_{CC}	Power Supply Current		120	mA	

CAPACITANCE

Symbol	Parameter	Typ.	Max.	Unit	Test Conditions
C_{IN}	Input Capacitance	5	10	pF	f_C = 1 MHz Unmeasured pins returned to V_{SS}
C_{OUT}	Output Capacitance	10	20	pF	

A.C. CHARACTERISTICS [T_A = 0°C to 70°C, V_{SS} = 0V, (Note 3)]

Bus Parameters

READ CYCLE

Symbol	Parameter	8279		8279-5		Unit
		Min.	Max.	Min.	Max.	
t_{AR}	Address Stable Before $\overline{READ}$	50		0		ns
t_{RA}	Address Hold Time for $\overline{READ}$	5		0		ns
t_{RR}	$\overline{READ}$ Pulse Width	420		250		ns
t_{RD} [4]	Data Delay from $\overline{READ}$		300		150	ns
t_{AD} [4]	Address to Data Valid		450		250	ns
t_{DF}	$\overline{READ}$ to Data Floating	10	100	10	100	ns
t_{RCY}	Read Cycle Time	1		1		μs

A.C. CHARACTERISTICS (Continued)

WRITE CYCLE

Symbol	Parameter	8279		8279-5		Unit
		Min.	Max.	Min.	Max.	
t_{AW}	Address Stable Before $\overline{WRITE}$	50		0		ns
t_{WA}	Address Hold Time for $\overline{WRITE}$	20		0		ns
t_{WW}	$\overline{WRITE}$ Pulse Width	400		250		ns
t_{DW}	Data Set Up Time for $\overline{WRITE}$	300		150		ns
t_{WD}	Data Hold Time for $\overline{WRITE}$	40		0		ns
t_{WCY}	Write Cycle Time	1		1		μs

OTHER TIMINGS

Symbol	Parameter	8279		8279-5		Unit
		Min.	Max.	Min.	Max.	
$t_{\phi W}$	Clock Pulse Width	230		120		nsec
t_{CY}	Clock Period	500		320		nsec

Keyboard Scan Time ..... 5.1 msec
Keyboard Debounce Time ..... 10.3 msec
Key Scan Time ..... 80 μsec
Display Scan Time ..... 10.3 msec

Digit-on Time ..... 480 μsec
Blanking Time ..... 160 μsec
Internal Clock Cycle[5] ..... 10 μsec

NOTES:
1. 8279, I_{OL} = 1.6mA; 8279-5, I_{OL} = 2.2mA.
2. 8279, I_{OH} = -100μA; 8279-5, I_{OH} = -400μA.
3. 8279, V_{CC} = +5V ±5%; 8279-5, V_{CC} = +5V ±10%.
4. 8279, C_L = 100pF; 8279-5, C_L = 150pF.
5. The Prescaler should be programmed to provide a 10 μs internal clock cycle.

A.C. TESTING INPUT, OUTPUT WAVEFORM

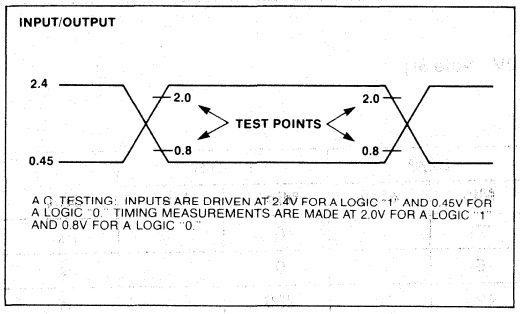

A.C. TESTING LOAD CIRCUIT

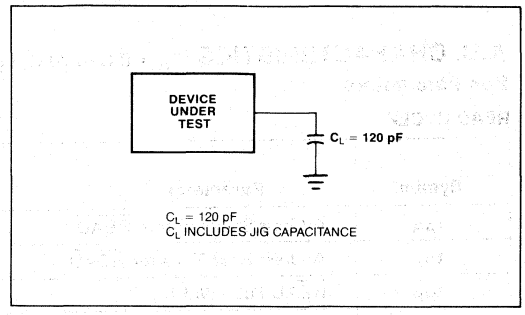

WAVEFORMS

READ OPERATION

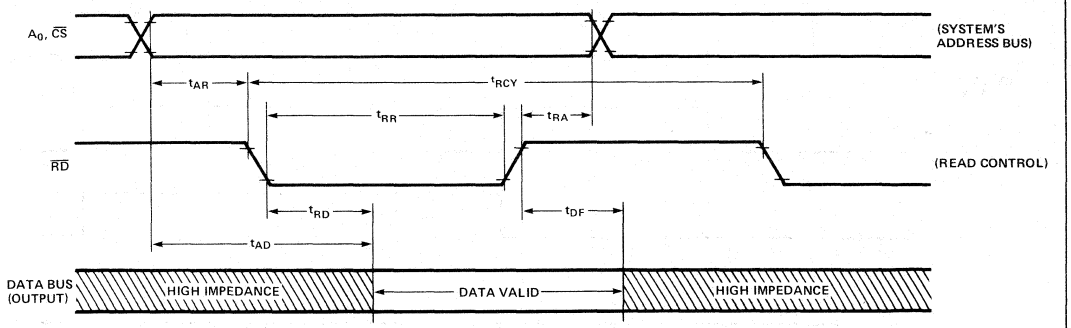

WRITE OPERATION

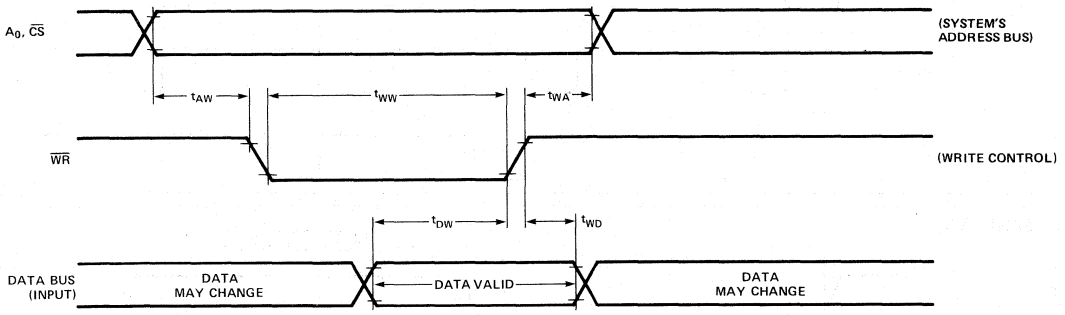

CLOCK INPUT

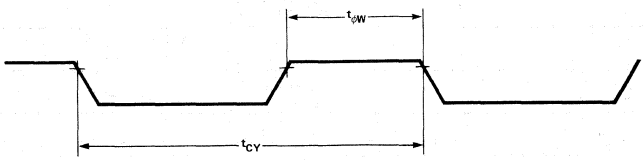

WAVEFORMS (Continued)

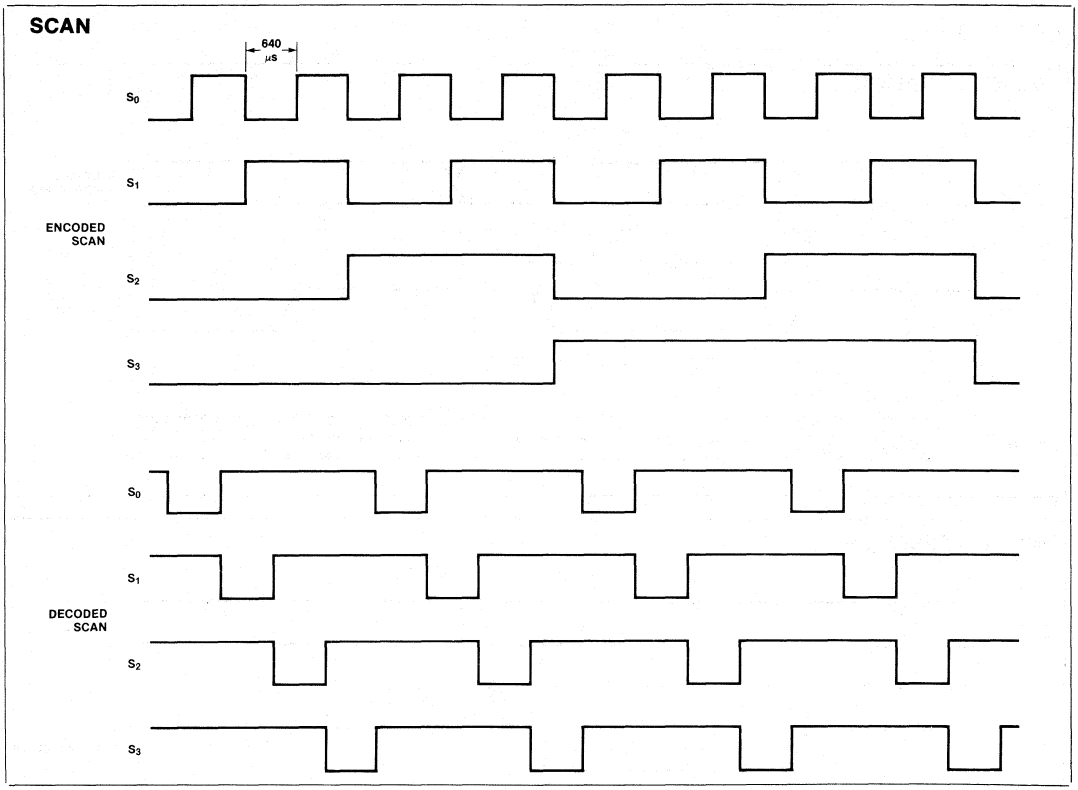

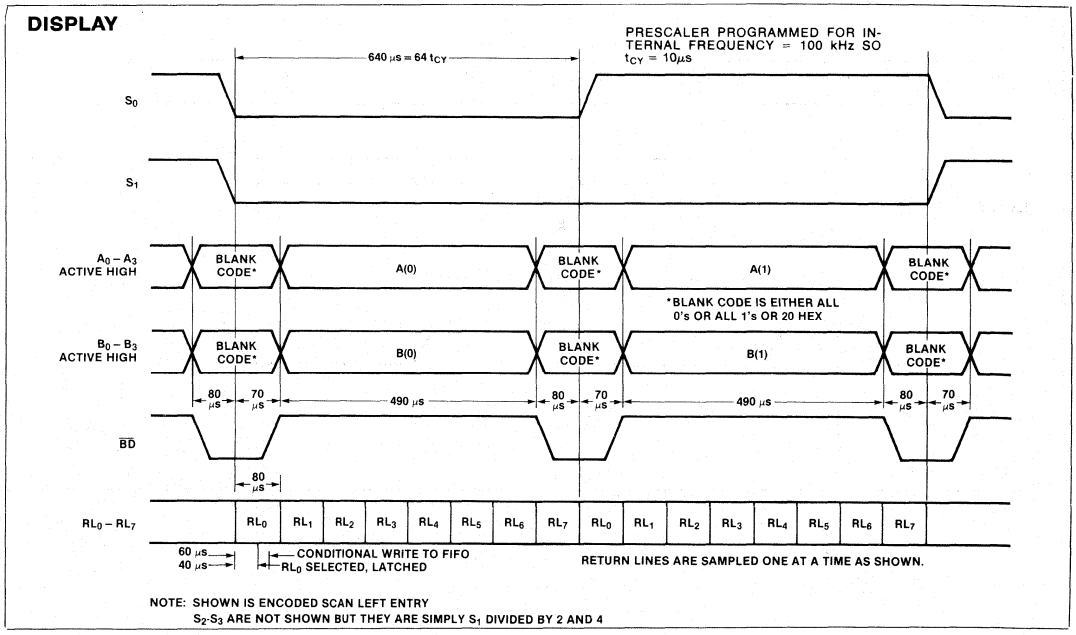

NOTE: SHOWN IS ENCODED SCAN LEFT ENTRY
S_2-S_3 ARE NOT SHOWN BUT THEY ARE SIMPLY S_1 DIVIDED BY 2 AND 4

iAPX 432 Micromainframe

10

PRELIMINARY

iAPX 43201/43202/43203
VLSI MICROMAINFRAME™ SYSTEM

- **Multiprocessor Computer System provides a range of performance**
- **Object Based Architecture Meets Operating System and High Level Language Needs**
- **2^{40} Bytes of Virtual Address Space**
- **Protected Addressing increases reliability and fits High Level Language Needs**
- **Multiple I/O Subsystems provide I/O Extensibility**
- **Silicon O.S. Provides:**
  - **— Transparent Multiprocessor Support**
  - **— Multitasking**
  - **— Dynamic Storage Allocation/Deallocation**
  - **— Interprocess Communication**

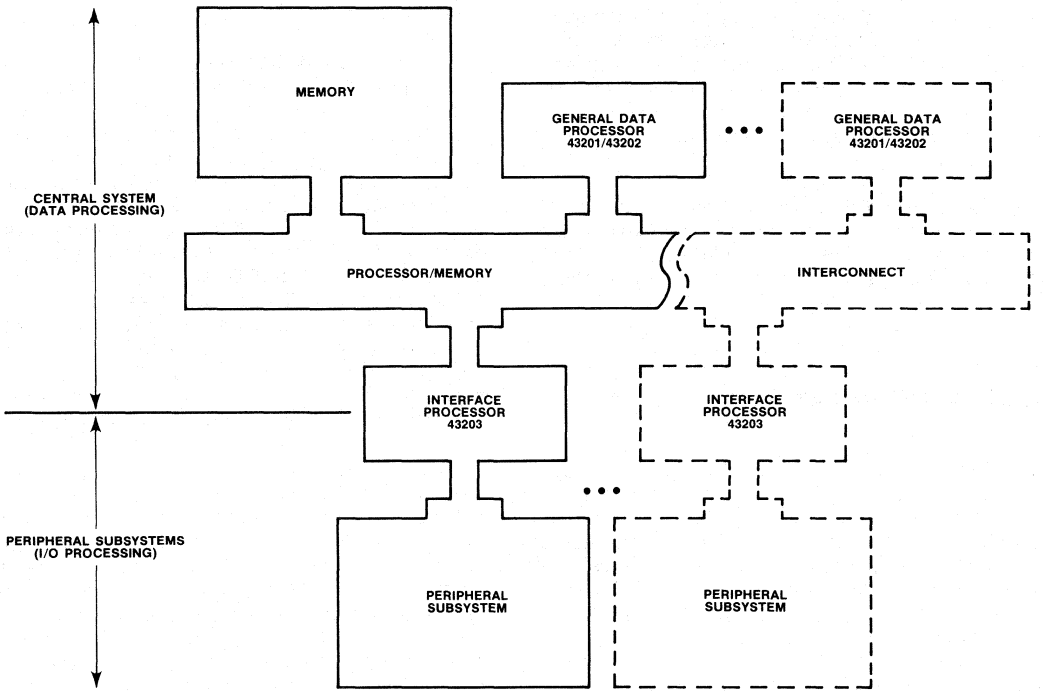

Figure 1: General 432 System Organization

The following are trademarks of Intel Corporation and its affiliates and may be used only to describe Intel products: Intellec, MULTIBUS, and the combination of iSBC and a numerical suffix. Corporation assumes no responsibility for the use of any circuitry embodied in an Intel product. No other circuit patent licenses are implied.

© INTEL CORPORATION, 1981

APPLICATIONS

The 432 is a VLSI computer system aimed at a distinctive class of applications. Products well-suited to the 432 exhibit some or all of the following attributes (as seen by the OEM, not the end user):

- a *range of performance* (potentially extending up to the level of a midrange mainframe) is required to span a family of related products or to provide headroom for future growth;
- *maximum dependability* (data integrity and uptime) of both hardware and software is critical;
- *software dominates* development cost and time to market;
- *concurrent execution* of many independent and cooperative activities characterizes the run-time environment;
- *growth and evolution* of services over time make software revision as important as initial development.

Compared to "traditional" microcomputer applications, these applications are larger (as measured by consumption of computer as well as staff and financial resources) and are far more complex. These factors place demanding requirements on the computer system selected to support the application.

The goal of the 432 is to significantly reduce the lifecycle costs of complex applications. Toward this end, the 432 introduces a *new computer technology,* an integrated system of hardware, software and methodology.

SYSTEM ORGANIZATION

All 432-based systems share the overall organization depicted in figure 1. The boundary between the central system and the peripheral subsystems essentially divides responsibility for data processing from input/output processing. It also serves as a protective barrier: all information in central system memory is shielded (by 432 hardware) against unauthorized access; peripheral subsystems may or may not provide any sort of protection. Finally, processing required to satisfy a critical real-time constraint (usually related to an I/O device) is generally performed in a peripheral subsystem, close to the source of the constraint.

The central system is organized as a set of 432 processors that share access to a common pool of memory and to each other. General data processors (GDPs) perform computational work, while interface processors (IPs) provide pathways for input/output to and from the central memory. The number and type of processors configured in a given system is a function of performance requirements, and can be varied independently of software. All 432 processors have built-in facilities for communicating with each other, both automatically and under software control. Additional communication facilities permit programs running on the same or different processors to exchange messages through memory.

The central system supports up to 2^{24} bytes (16 megabytes) of real memory, and a virtual memory space of 2^{40} (over a trillion) bytes. Enforced automatically by the processors, every data structure in the central memory is individually protected. It is important to note here that "data structure" means *any organized collection of information,* including such logical entities as operand stacks and sequences of code, as well as what are ordinarily considered data structures.

A multiprocessor design like the 432 permits widely differing systems to be built from a small collection of parts. No bus design could possibly satisfy the cost, size, flexibility and performance requirements of all possible system configurations. Therefore, the 432 defines a standard processor/memory communications *protocol* rather than a standard bus. Designed to minimize bus occupancy and exploit available bus width, the protocol is based on a variable-length (1 to 16 byte) *packet* of information. Processors transmit request packets to memory, and receive reply packets in response to read operations. The protocol defines interprocessor communication as well. Each application is free to design an interconnect structure that implements the protocol in conformance with local needs.

Independent decentralized I/O, along the lines of the mainframe channel concept, is inherent in the 432. Input/output operations — including all device control, interrupt handling and data buffering — are delegated to peripheral subsystems. These are autonomous satellite computers attached to the central system by means of 432 interface processors. The number and configuration of peripheral subsystems is a function of application needs and can evolve over time. Any computer that can communicate over a standard 8- or 16-bit bus, such as Intel's Multibus design (IEEE standard 769), can serve as a peripheral subsystem.

Intel Corporation, 3585 SW 198th, Aloha, Oregon 97007

iAPX 43201 iAPX 43202 PRELIMINARY
VLSI GENERAL DATA PROCESSOR

- **Self-Dispatching Processors for Software-Transparent Multiprocessing**
- **Hardware Implemented Inter-Process Communication and Dynamic Storage Allocation**
- **High-Level Language Directed Instruction Set with 0-3 Operand References**
- **Functional Redundancy Checking Mode for Hardware Error Detection**
- **Capability-Based Addressing and Protection**
- **2^{40} Bytes of Virtual Address Space**
- **Object-Based Architecture for Improved Programmer Productivity**
- **Symmetrical Support of All 8-, 16-, and 32-Bit Scalar Data Types and Proposed IEEE Standard 32-, 64-, and 80-Bit Floating Point**

The Intel iAPX 432 General Data Processor (GDP) consists of two VLSI devices, the 43201 and the 43202. These companion devices (shown in Figures 1 and 2) provide the general data processing facility of the iAPX 432 Micromainframe™ system. The combination of VLSI technology and advanced architecture in the iAPX 432 system results in mainframe functionality with a microcomputer form factor. The new object-based architecture significantly reduces the cost of large software systems and enhances their reliability and security.

Software-transparent multiprocessing allows the user to configure systems matched to the required performance and provides an easy growth path. Hardware support for operating systems and high-level languages eases their implementation.

The GDP provides 2^{40} bytes of virtual address space with capability-based addressing and protection. In addition, a hardware-implemented functional redundancy checking mode is provided for the detection of hardware errors.

The iAPX 43201 and iAPX 43202 are fabricated with Intel's highly reliable +5-volt, depletion load, N-channel, silicon gate HMOS technology and each is packaged in a 64-pin Quad In-Line Package (QUIP).

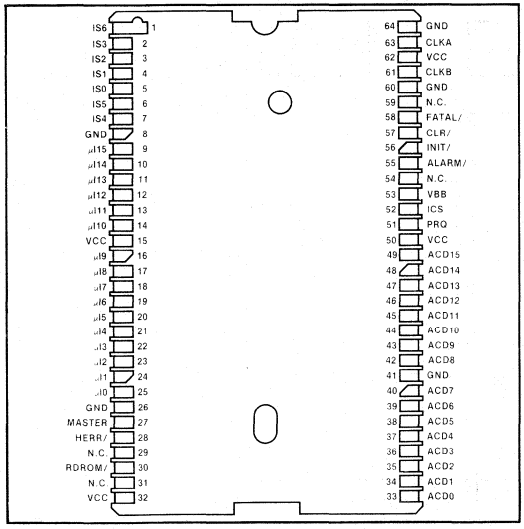

Figure 1. 43201 Pin Assignment Instruction Decoder/Microinstruction Sequencer 171873-1

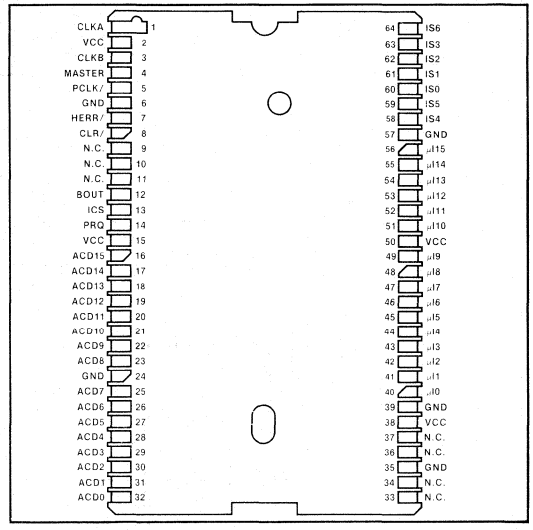

Figure 2. 43202 Pin Assignment Execution Unit 171873-2

The following are trademarks of Intel Corporation and may be used only to identify Intel products: BXP, CREDIT, i, ICE, iCS, i_m, Insite, Int$_e$l, Intelevision, Intellec, iRMX, iSBC, iSBX, Library Manager, MCS, Megachassis, Micromainframe, Micromap, Multibus, Multimodule, PROMPT, Promware, RMX/80, System 2000, UPI, μScope, and the combination of ICE, iCS, iRMX, iSBC, iSBX, MCS, or RMX and a numerical suffix.
© Intel Corporation 1981

iAPX 432 GDP FUNCTIONAL DESCRIPTION

The general data processor is organized internally as a three-stage microprogram-controlled pipeline. The first stage is the instruction decoder (ID); the second stage is the microinstruction sequencer (MS); and the third stage is the execution unit (EU).

The first two stages of the pipeline are physically located on the 43201 (Figure 3). Each stage of the pipeline can be considered an independent subprocessor which operates until the pipeline is full and then halts and waits for more work to do.

Instruction Decoder

The first subprocessor of the pipeline is the ID, which performs the following functions:

- Receives macroinstructions
- Processes variable-length fields
- Extracts logical addresses
- Generates starting addresses for the microinstruction procedures
- Generates microinstructions for simple operations

The general task facing the Instruction Decoder is to interpret the macro-instruction stream to determine which micro-instruction sequence should be initiated next and to extract logical address data. The major sub-tasks involved in accomplishing the larger goal are:

- iAPX 432 instructions contain a variable number of bits, depending upon the complexity of the instruction. Instructions may range from a few bits long to several hundred bits long. Instructions may extend over many words in memory. The Instruction Decoder requests words from memory as they are needed.
- A GDP instruction is composed of a variable number of fields and each field may contain a variable number of bits. In most cases, the

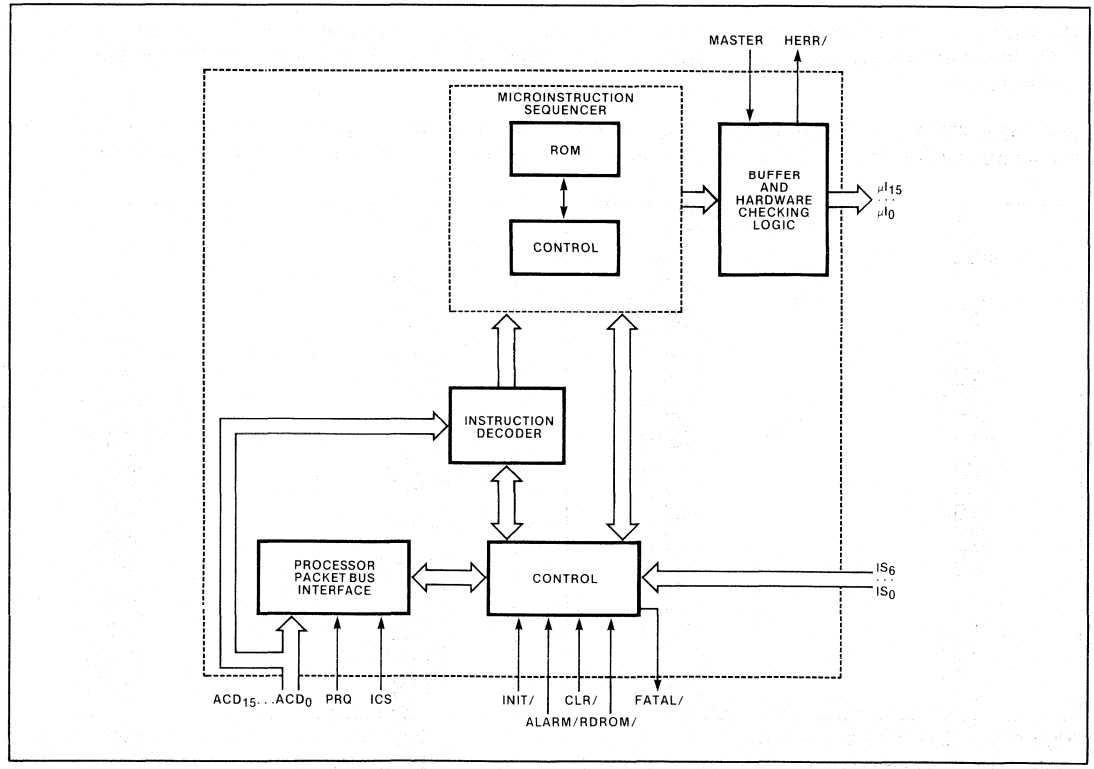

Figure 3. 43201 Block Diagram

171873-3

encoding of a field specifies its length. The Instruction Decoder interprets a field to find its length.

- The Instruction Decoder determines when an instruction boundary has been reached so that it may properly begin decoding the next instruction.
- In some cases, the interpretation of one field may depend upon the value of some previous field. In particular, the interpretation of the opcode (the last field of an instruction) depends on the value of the class field of that instruction (the first field). The Instruction Decoder saves enough information about the instruction to properly interpret every field in the instruction.
- A GDP instruction may contain an explicit reference to some location in memory. This logical address information must be transferred to the Reference Generation Unit so that the correct physical address of the operand may be generated. As with all fields of a GDP instruction, the logical address fields are also variable length fields. The Instruction Decoder has provisions for formatting the logical address information and storing it until needed by the Reference Generation Unit.
- The iAPX 432 instruction set contains several branch instructions. Since iAPX 432 instructions may start at any bit in the segment, the Instruction Decoder is able to start decoding at any point in the segment. Since branches occur fairly often in a typical instruction stream, it is also desirable to minimize the start-up time of the GDP after a branch has occurred.
- The Instruction Decoder provides a mechanism to recover from an instruction that faults. The information necessary for fault recovery will be retained by the Instruction Decoder until the instruction is successfully completed.

Microinstruction Sequencer

The second subprocessor in the pipeline is the Microinstruction Sequencer (MS) which performs the following functions:

- Issues microinstructions to the Execution Unit (EU) (43202)
- Executes microcode sequences out of an on-chip, 4.0K x 16-bit microcode ROM
- Responds to the bus control signals
- Invokes macroinstruction fetches
- Initiates interprocessor communication and fault handling sequences

The role of the Microinstruction Sequencer is to decide which microinstruction should be sent to the Execution Unit for each cycle. The Microinstruction Sequencer must consider each of the following when generating microinstructions:

- There are two sources of microinstructions. They may come from either the Instruction Decoder or from a ROM contained in the Microinstruction Sequencer (MS). The MS must choose the appropriate source.
- The Microinstruction Sequencer must compute the address in ROM (if any) of the next microinstruction.
- The Execution Unit may require variable lengths of time to complete some microinstructions. The Microinstruction Sequencer waits for the Execution Unit to finish the requested operation.

Execution Unit

The 43202 contains the third stage of the GDP pipeline—the Execution Unit (EU). (Refer to Figure 4.) This unit receives microinstructions from the 43201 and routes them to one of the two independent subprocessors that make up the EU. These two are the Data Manipulation Unit (DMU) and the Reference Generation Unit (RGU).

The EU executes most microinstructions in one clock cycle. However, each of the subprocessors has an associated sequencer that may run for many cycles in response to certain microinstructions. Those sequencers are invoked for complicated arithmetic operations (in the Data Manipulation Unit) and Processor Packet bus transactions (in the Reference Generation Unit).

The Data Manipulation Unit contains the registers and arithmetic capabilities to perform the following functions:

- Hardware recognition of nine (9) data types
- Built-in state machine for 16- and 32-bit multiply, divide, and remainder
- Control functions for 32-, 64-, and 80-bit floating point arithmetic

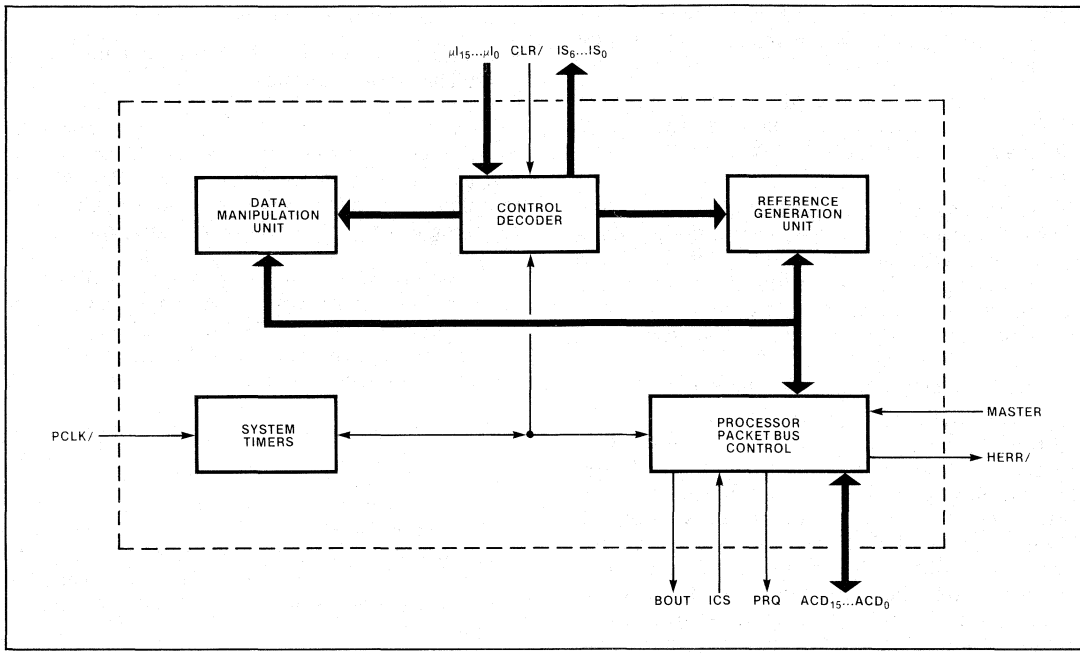

Figure 4. 43202 Block Diagram

171873-4

The Reference Generation Unit performs the following functions:

- Provides the translation of a 40-bit virtual address into a 24-bit physical address
- Provides for a hardware-enforced domain protection system (read, write, alter, accessed)
- Handles sequencing for 8-, 16-, 32-, 64-, and 80-bit memory accesses
- Controls on-chip top-of-stack register

The Execution Unit manipulates data and translates the logical addresses into physical addresses. The efficient performance of these tasks requires:

- While most microinstructions require only a single cycle to complete, there are some that require multiple and even variable numbers of cycles. As a result there are two sequences in the Execution Unit. One sequence is associated with the Data Manipulation Unit and is responsible for controlling multiple-cycle arithmetic operations. The other sequencer works in conjunction with the Reference Generation Unit and is responsible for running cycles on the Processor Packet bus.
- When a reference to a given memory segment has been translated from its logical representation to a physical address, there is a cache in the Reference Generation Unit that maintains the physical base address as well as the length of the segment. Future references to the same segment can use this cached information as the basis for logical to physical address translation.
- There is a hardware-implemented feature which uses least-recently-used algorithms for deciding which cached segment base-length pair to replace when a new segment is referenced.
- The top 16-bit element of the operand stack can be stored in a register in the Data Manipulation Unit.
- A circuit in the Reference Generation Unit checks every memory reference to see if it is within the length of its segment. Since the iAPX 432 architecture controls the type of access (read, write) as well, whether or not the access is allowed at all, this hardware also verifies that the reference is of the proper type.

The 43201 and 43202 components, described above, together form the GDP. Figure 5 is a block diagram that shows both units interfacing to the Packet bus as a single processor.

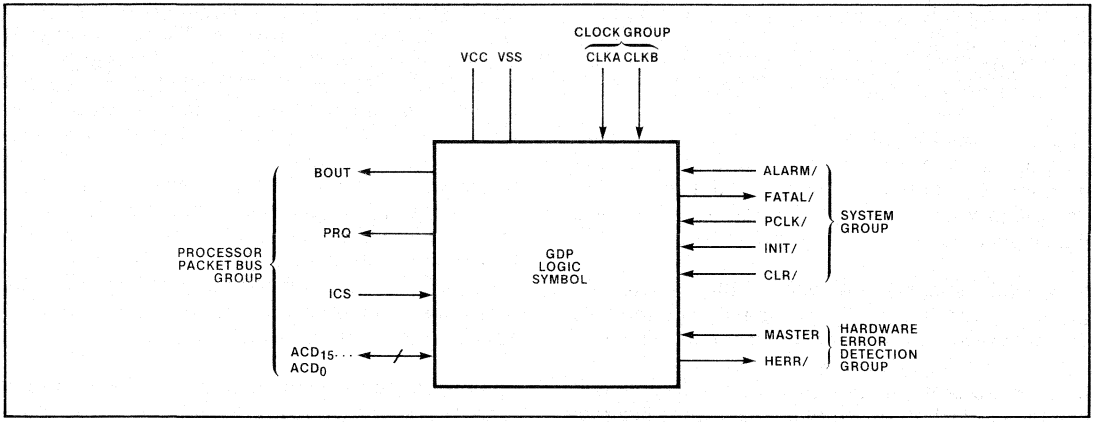

Figure 5. GDP Block Diagram

171873-5

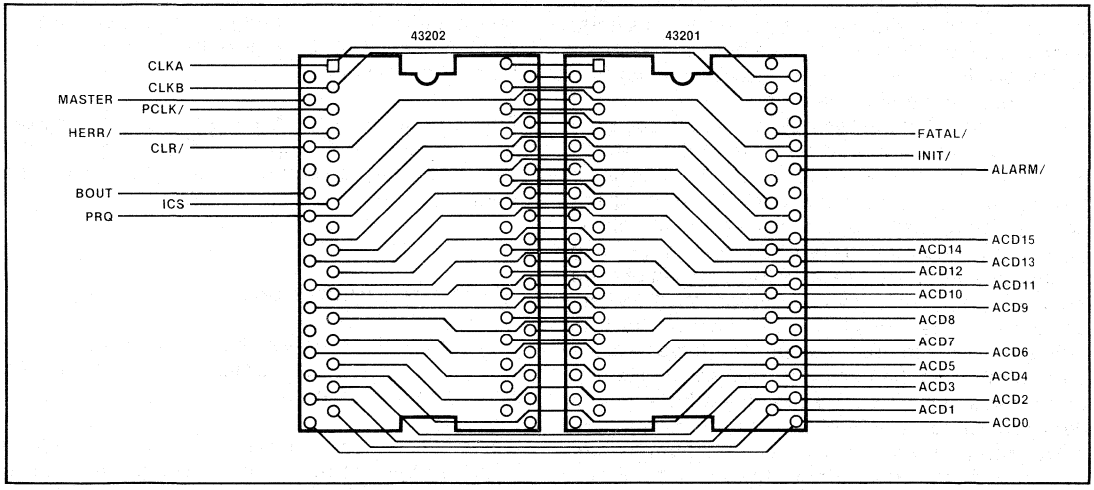

Figure 6. GDP Layout

171873-6

iAPX 43201/43202 PHYSICAL INTERCONNECT

Figure 6 illustrates how the 43201 and 43202 are layed-out to form a GDP.

432 INSTRUCTIONS

Intel iAPX 432 instruction codes have been designed to minimize the space the instructions occupy in memory and still allow for efficient encoding. In order to achieve the ultimate in efficiency of storage, the instructions are encoded without regard for byte, word, or other artificial boundaries. The instructions may be viewed as a linear sequence of bits in memory, with each instruction occupying exactly the number of bits required for its complete specification.

iAPX 432 processors view these instructions as composed of fields of varying numbers of bits that are organized to present information to the Instruction Decoder in the sequence required for decoding. A unified form for all instructions allows instruction decoding of all instructions to proceed in the same fashion.

In general, GDP instructions consist of four main fields. These fields are called the class field, the format field, the reference field, and the opcode field. The reference field, in turn, may contain

several other fields, depending upon the number and complexity of the operand references in the instruction. The fields of a GDP instruction are stored in memory in the following format.

The class field is either 4- or 6-bits long, depending on its encoding. The class field specifies the number of operands required by the instruction and the primitive types of the operands. The class field may indicate 0, 1, 2 or 3 references.

If the class field indicates one or more references, a format field is required to specify whether the references are implicit or explicit and their uses.

In the case of explicit references the format field can indicate whether or not the reference is direct or indirect. Further, the format field may indicate that a single operand plays more than one role in the execution of the instruction. As an example, consider an instruction to increment the value of an integer in memory. This instruction contains a class field, which specifies that the operator is of order two and that the two operands both occupy a word of storage, followed by a format field, whose value indicates that a single reference specifies a logical address to be used both for fetching the source operand and for storing the result, followed by an explicit data reference to the integer to be incremented, and finally followed by an opcode field for the order-two operator INCREMENT INTEGER. It is possible for a format field to indicate that an instruction contains fewer explicit data references than are indicated by the instruction's class field. In such a case the other required data references are implicit references, and the corresponding source or result operands are obtained from or returned to the top of the operand stack. The use of implicit references is illustrated in the following example, which considers the high-level language statement

$$A=A+B*C$$

The instruction stream fragment for this statement consists of two instructions and has the following form:

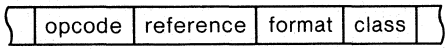

Assume that A, B, and C are integer operands. The first class field (the rightmost field above) specifies that the operator requires three references and that all three references are to word operands.

The first format field contains a code specifying two explicit data references. These references are to supply only the two source operands. The destination is referenced implicitly so that the result of the multiplication is to be pushed onto the operand stack. The second class field is identical to the first and specifies three required references by the operator. In addition, all three references are to word operands. The second format field specifies one explicit data reference to be used for both the first source operand and the destination. The second source operand is referenced implicitly and is to be popped from the operand stack when the instruction is executed.

The reference fields themselves can be of various lengths and can appear in various numbers, consistent with their specification in the class and format fields. If implicit references are specified, reference fields for them will not appear. Direct references will require more bits to specify than indirect references.

Following the class, format, and reference fields, the opcode field appears. The opcode field specifies the operator to be applied to the operands specified in the preceding fields.

Modes of Generation

Figures 7 and 8 illustrate the two iAPX 432 system modes of generation: Selector Generation and Displacement Generation.

The modes of Selector Generation are concerned with the object structure and how they are accessed by the operands. The four modes of Selector Generation shown are:

- Short Direct
- Long Direct
- Stack Indirect
- General Indirect

The modes of Displacement Generation specify the physical location and displacement of objects within a given segment or segment. The four modes of Displacement Generation are:

- Scalar Data Reference Mode
- Record Item Reference Mode
- Static Vector Element Reference Mode
- Dynamic Vector Element Reference Mode

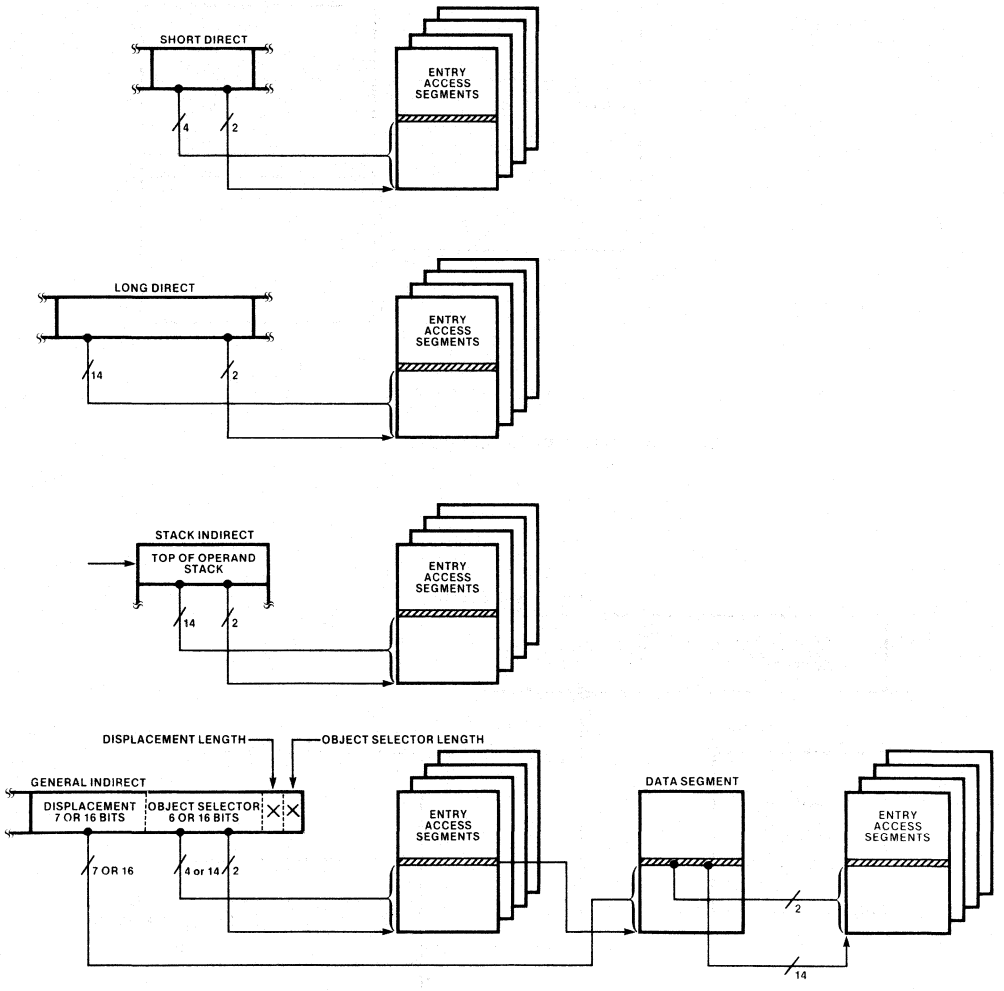

Figure 7. Modes of Selector Generation

171873-7

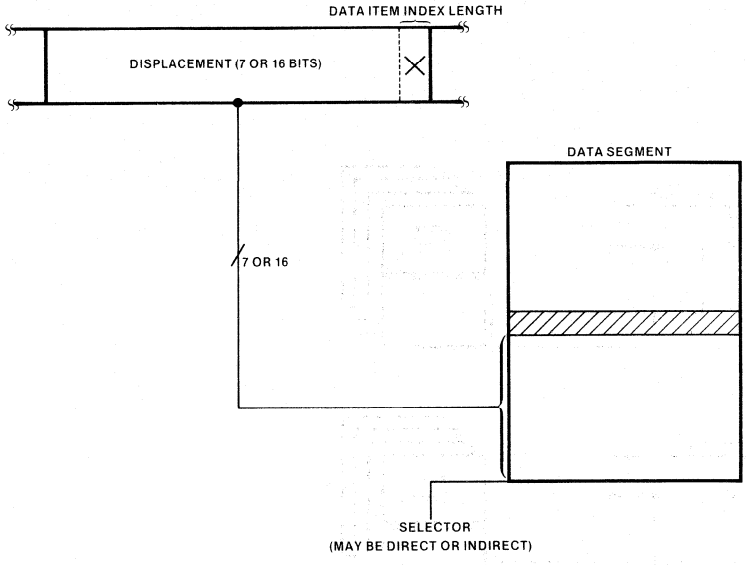

A. SCALAR DATA REFERENCE MODE

171873-8

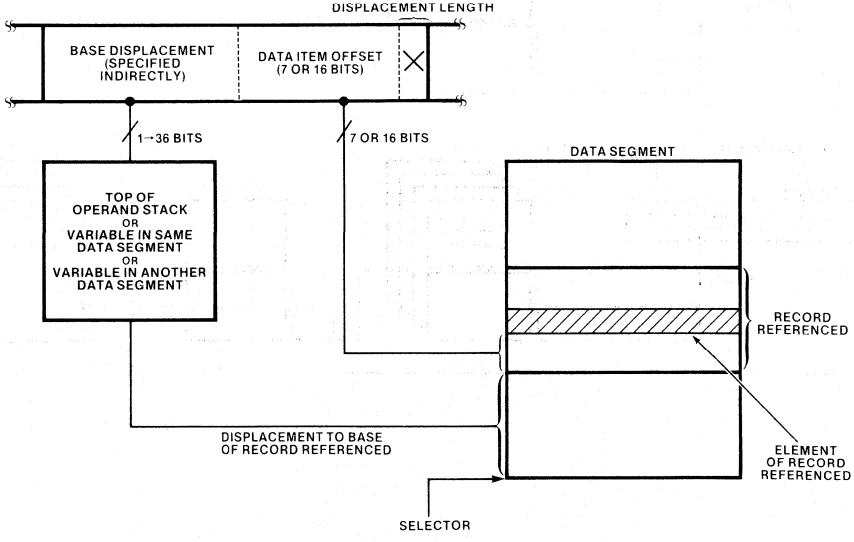

B. RECORD ITEM REFERENCE MODE

171873-9

Figure 8. Modes of Displacement Generation

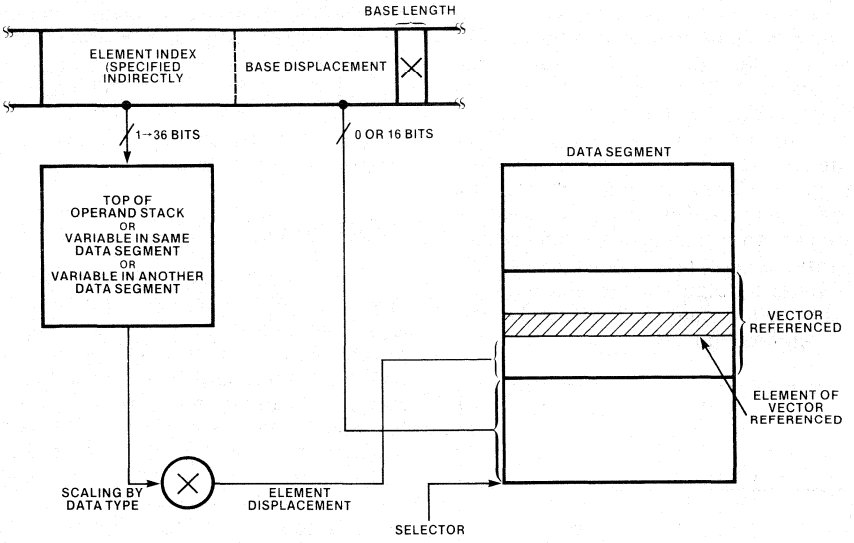

C. STATIC VECTOR ELEMENT REFERENCE MODE 171873-10

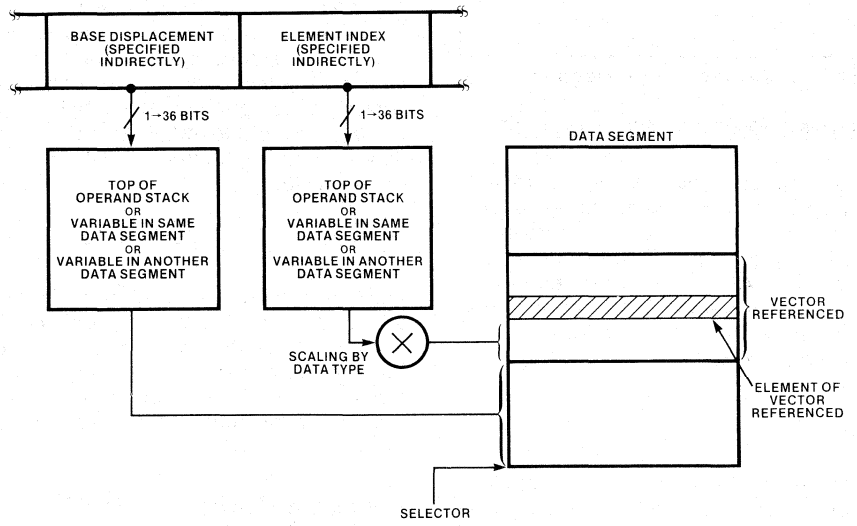

D. DYNAMIC VECTOR ELEMENT REFERENCE MODE 171873-11

Figure 8. Modes of Displacement Generation (Cont'd.)

HARDWARE ERROR DETECTION FOR iAPX 432 PROCESSORS

iAPX 432 processors include a facility to support the hardware detection of errors by functional redundancy checking (FRC). At initialization time, each iAPX 432 processor is configured to operate as either a master or a checker processor. A master operates in the normal manner. A checker places all output pins that are being checked in the high-impedance state. Thus, those pins which are to be checked on a master and checker are parallel-connected, pin for pin, so the checker can compare its master's output values with its own. Any comparison error causes the checker to assert HERR/ (refer to Figure 9).

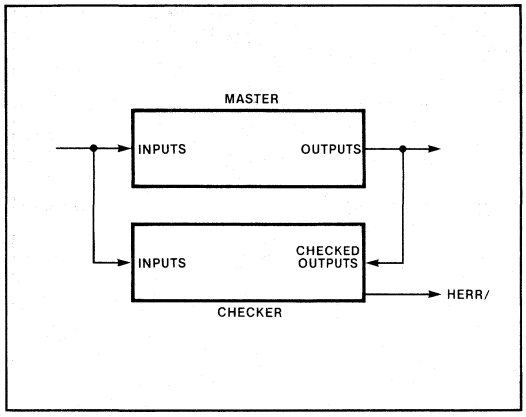

Figure 9. Hardware Error Detection 171873-12

iAPX 432 INFORMATION STRUCTURE

The following section presents the information structure for an iAPX 432 system and includes a discussion of memory system requirements, physical addressing, data formats, and data representation. Any 432 processor in the system can access all the contents of physical memory. This section describes how information is represented and accessed.

Memory

The iAPX 432 implements a two-level memory structure. The software system exists in a segmented environment in which a logical address specifies the location of a data item. The processor automatically translates this logical address into a physical address for accessing the value in physical memory.

Physical Addressing

Logical addresses are translated by the processor into physical addresses. Physical addresses are transmitted to memory by a processor to select the beginning byte of a memory value to be referenced. A physical address is 24 binary bits in length. This results in a maximum physical memory of 16 megabytes.

Data Formats

When a processor executes the instructions of an operation within a context, operands found in the logical address space of the context may be manipulated. An individual operand may occupy one, two, four, eight, or ten bytes of memory (byte, double byte, word, double word, or extended word, respectively). All operands are referenced by a logical address as described above. The displacement in such an address is the displacement in bytes from the base address of the data segment to the first byte of the operand. For operands consisting of multiple bytes, the address locates the low-order byte while the higher-order bytes are found at the next higher consecutive addresses.

Data Representation

An iAPX 432 convention has been adopted for representing data operands stored in memory. The bits in a field are numbered by increasing numeric significance, with the least-significant bit shown on the right. Increasing byte addresses are shown from right to left. Examples of the five basic data lengths used in the iAPX 432 system are shown in Figure 10.

Data Positioning

The data operand types shown in Figure 10 may be aligned on an arbitrary byte boundary within a data segment. Note that more efficient system operation may be obtained when multi-byte data structures are aligned on double-byte boundaries (if the memory system is organized in units of double bytes).

Requirements of an iAPX 432 Memory System

The multiprocessor architecture of the iAPX 432 places certain requirements on the operation of the memory system to ensure the integrity of data

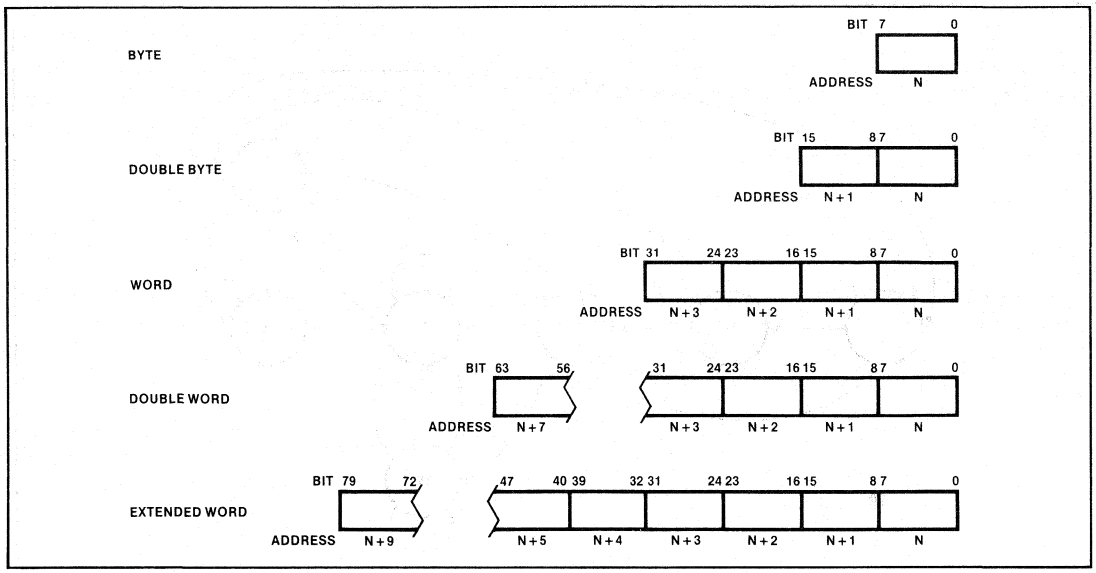

Figure 10. Basic iAPX 432 Data Lengths

171873-13

items that can potentially be accessed simultaneously. Indivisible read-modify-write (RMW) operations to both double-byte and word operands in memory are necessary for manipulating system objects. When an RMW-read is processed for a location in memory, any other RMW-reads from that location must be held off by the memory system until an RMW-write to that location is received (or until an RMW timeout occurs). Note that while the memory system is awaiting the RMW-write, any other types of reads and writes are allowed. Also, for ordinary reads and writes of double-byte or longer operands, the memory system must ensure the entire operand has been either read or written before beginning to process another access to the same location; e.g., if two simultaneous writes to the same location occur, the memory system must ensure that the set of locations used to store the operand does not get changed to some interleaved combination of the two written values.

PROCESSOR PACKET BUS DEFINITION

This section describes and defines the significance of the 19 signal lines that make up the Processor Packet bus, and the general scheme by which timing relationships on these lines are derived. Although this section defines all legal bus activities, the processors do not necessarily perform all allowed activities. Slaves to the Processor Packet bus must support all state transitions to ensure compatibility (refer to Figure 11 for Packet bus states).

The Processor Packet bus consists of 3 control lines:

- Processor Packet bus Request (PRQ),
- Enable Buffers for Output (BOUT),
- Interconnect Status (ICS).

This bus also includes sixteen 3-state Address-Control-Data lines (ACD15 through ACD0). PRQ has two functions whose use depends upon the application; i.e., PRQ either indicates the first cycle of a transaction on the Processor Packet bus or the cancellation of a transaction initiated in the previous cycle. Of the three control lines, BOUT has the simplest function, serving as a direction control for buffers in large systems requiring more electrical drive than the processor components can provide. The ICS signal has significance pertaining to one of three different system conditions and depends on the state of the Processor Packet bus transaction. The processor interprets the ICS input as an indication of one of the following:

- Whether or not an interprocessor communication (IPC) is waiting,
- Whether or not the slave requires more time to service the processor's request,
- Whether or not a bus ERROR has occurred.

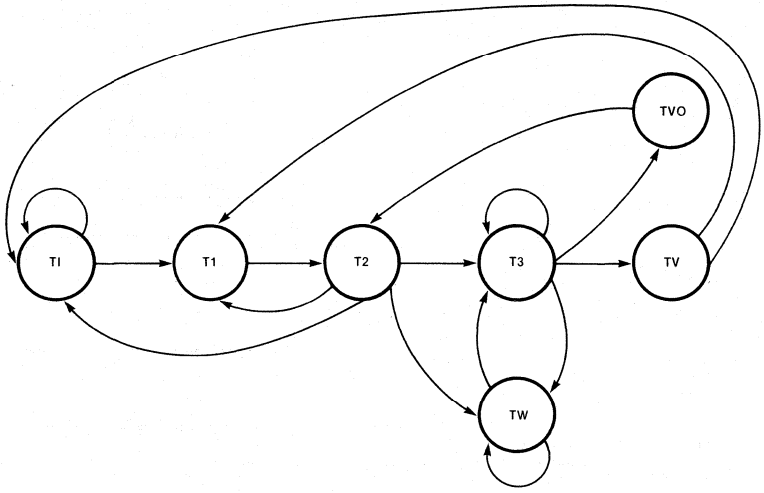

Initial State	Next State	Trigger
Ti	TI Ti	Bus cycle desired No bus cycle desired
TI	T2	Unconditional
T2	T3 Tw TI Ti	ICS high ICS low Cancelled, Access Pending Cancelled, No Access Pending
T3	T3 Tw Tv Tvo	Additional transfer required, ICS high Additional transfer required, ICS low All transfers completed, no overlapped access Current write with overlapped access
Tv	Ti TI	No access pending Access pending
Tvo	T2	Unconditional
Tw	Tw T3	ICS low ICS high

Figure 11. Processor Packet Bus State Diagram

17 1873-14

The Address/Control/Data lines emit output specification information to indicate the type of cycle being initiated, e.g., addresses, data to be written, or control information. They also receive data returned to the processor during reads. Details of the ACD line operation and the associated control lines are summarized below.

ACD15-ACD0 (Address/Control/Data)

During the first cycle, (T1 or Tvo) of a Processor Packet bus transaction (indicated by the rising edge of PRQ), the high-order 8 ACD bits (ACD15...ACD8) specify the type of the current transaction. In this first cycle, the low-order ACD bits (ACD7...ACD0) contain the least significant eight bits of the 24-bit physical address.

During the subsequent cycle (T2), the remainder of the address is present on the ACD pins (aligned such that the most significant byte of the address is on ACD15 through ACD8, the mid-significant byte on ACD7 through ACD0). If PRQ is asserted during T2, the access is cancelled and the ACD lines are not defined.

During the third cycle (T3 or Tw) of a Processor Packet bus transaction the processor presents a high impedance to the ACD lines for read transactions and asserts write data for write transactions.

Once the bus has entered T3 or Tv, the sequence of state transactions depends on the type of cycle requested during the preceding T1 or Tvo. Accesses ranging in length from 1 to 32 bytes may be requested (see Table 1). If a transfer of more than one double-byte has been requested, it is necessary to enter T3 for every double-byte that is transferred. The processor may simply enter T3 or it may first enter Tw for any number of cycles (as dictated by ICS).

After all data is transferred, the processor enters either Tv or Tvo. Tvo can be entered only when the internal state of execution is such that the processor is prepared to accomplish an immediate write transfer (overlapped access). During Tvo, the ACD lines contain address and specification information aligned in the same fashion as in T1. If the processor does not require an overlapped access, the bus state moves to Tv (the ACD lines will be high impedance). After Tv, a new bus cycle can be started with T1, or the processor may enter the idle state(Ti).

ICS (Interconnect Status)

ICS has three possible interpretations depending on the state of the bus transaction (see Table 2). Notice that under most conditions ICS has IPC significance for more than one cycle. It is important to note that a valid low during any cycle with IPC significance will signal the processor that an

Table 1. ACD Specification Encoding

ACD 15	ACD 14	ACD 13	ACD 12	ACD 11	ACD 10	ACD 9	ACD 8
Access	**Op**	**RMW**	**Length**			**Modifiers**	
0 - Memory	0 - Read	0 - Nominal	000 - 1 Byte 001 - 2 Bytes 010 - 4 Bytes 011 - 6 Bytes 100 - 8 Bytes 101 - 10 Bytes 110 - 16 Bytes* 111 - 32 Bytes*			ACD 15 = 0: 00-Inst Seg Access 01-Stack Seg Access 10-Context Ctl Seg Access 11-Other	
1 - Other	1 - Write	1 - RMW	* Not implemented			ACD 15 = 1: 00-Reserved 01-Reserved 10-Reserved 11-Interconn Register	

IPC or reconfiguration request has been received. An iAPX 432 processor is required to record and service only one IPC or reconfiguration request at a time. Logic in the interconnect system must record and sequence multiple (possibly simultaneous) IPC occurrences and reconfiguration requests to the processor. Thus the logic that forms ICS must accomodate global and local IPC arrivals and requests for reconfiguration as individual events:

- Assert IPC significance on ICS for the arrival of an IPC or reconfiguration request.
- When the iAPX 432 processor reads interconnect address register 2, it will respond to one of the status bits for the IPC or reconfiguration request signalled on ICS in the following order:

  Bit 2 (1=reconfigure, 0=Do not reconfigure)

  Bit 1 (1=global IPC arrived, 0=no global IPC)

  Bit 0 (1=Local IPC arrived, 0=no local IPC)
- The logic in the interconnect system must clear the highest order status bit that was serviced by the iAPX 432 processor, and if additional IPC information has arrived, the interconnect system logic must signal an additional IPC indication to the iAPX 432 processor. The interconnect system must signal the second IPC by raising ICS high for at least one cycle and then setting ICS low for at least one cycle during IPC significance time.

Table 2. ICS Interpretation

	Level		State
	High	Low	
IPC	None	Waiting	Ti, T1, T2*
Stretch	Don't	Stretch	T3, Tw
Err	Bus Error	No Error	Tv, Tvo

* ICS has no significance in a cycle following a T2 where PRQ is asserted (cancelled access) or in any cycle during which CLR/ is asserted.

PRQ (Processor Packet Bus Request)

PRQ is normally low and can go high only during T1, T2 and Tvo. High levels during Tvo and T1 indicate the first cycle of an access. A high level during T2 indicate that the current cycle is to be cancelled. (See Table 3.)

Table 3. PRQ Interpretation

State	PRQ	Condition
Ti	0	Always
T1	1	Initiate access
T2	0	Continue access
	1	Cancel access
T3	0	Always
Tw	0	Always
Tv	0	Always
Tvo	1	Initiate overlapped access

BOUT (Enable Buffers for Output)

BOUT is provided to control external buffers when they are present. Table 4 and Figures 12 through 16 show its state under various conditions.

PROCESSOR PACKET BUS TIMING RELATIONSHIPS

All timing relationships on the Processor Packet bus are derived from a simple scheme and related to Table 5. Each timing diagram shown in the following pages (Figures 12 through 17) provides a separate table illustrating the various system states during the cycle. This approach to transfer timing was designed to allow maximum time for the transfer to occur and yet guarantee hold time. The solid lines in Figure 18 show the state transitions initiated by the GDP.

Any agent connected to the Processor Packet bus is recognized as either a processor or a slave. Examples of processors are the GDP and the IP. A memory system provides an example of a slave.

In all tranfers between a processor and a slave, the data to be driven are clocked three-quarters of a cycle before they are to be sampled. This allows adequate time for the transfer and ensures sufficient hold time after sampling. The BOUT timing is unique because BOUT is intended as a direction control for external buffers.

Detailed set-up and hold times depend on the processor implementation and can be found in the AC characteristics section.

Table 4. BOUT Interpretation

BOUT	Always High	Low-to-High Transition or Low	High-to-Low Transition or Low	High-to-Low Transition or High
Write	T1, T2, T3, Tw, Tvo	Ti	None	Tv
Read	T1,T2	Ti,Tv	T3,Tw	None

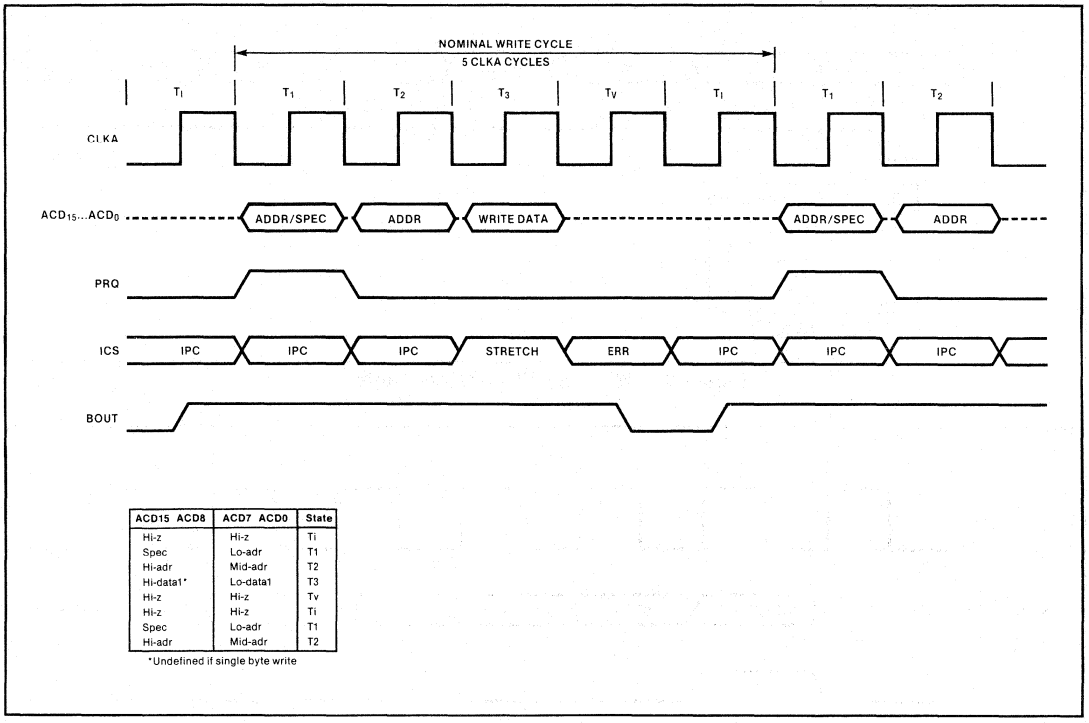

ACD15 ACD8	ACD7 ACD0	State
Hi-z	Hi-z	Ti
Spec	Lo-adr	T1
Hi-adr	Mid-adr	T2
Hi-data1*	Lo-data1	T3
Hi-z	Hi-z	Tv
Hi-z	Hi-z	Ti
Spec	Lo-adr	T1
Hi-adr	Mid-adr	T2

*Undefined if single byte write

Figure 12. Nominal Write Cycle Timing

171873-15

Table 5. iAPX 432 Component Signaling Scheme

	Processor		Slave	
Inputs Sampled	ACD:	↓CLKA	All:	↑CLKB
	Others:	↑CLKA		
Outputs Driven	All (except BOUT):	↓CLKA	ACD:	↓CLKB
			Others:	↑CLKB
	BOUT:	↑CLKA		

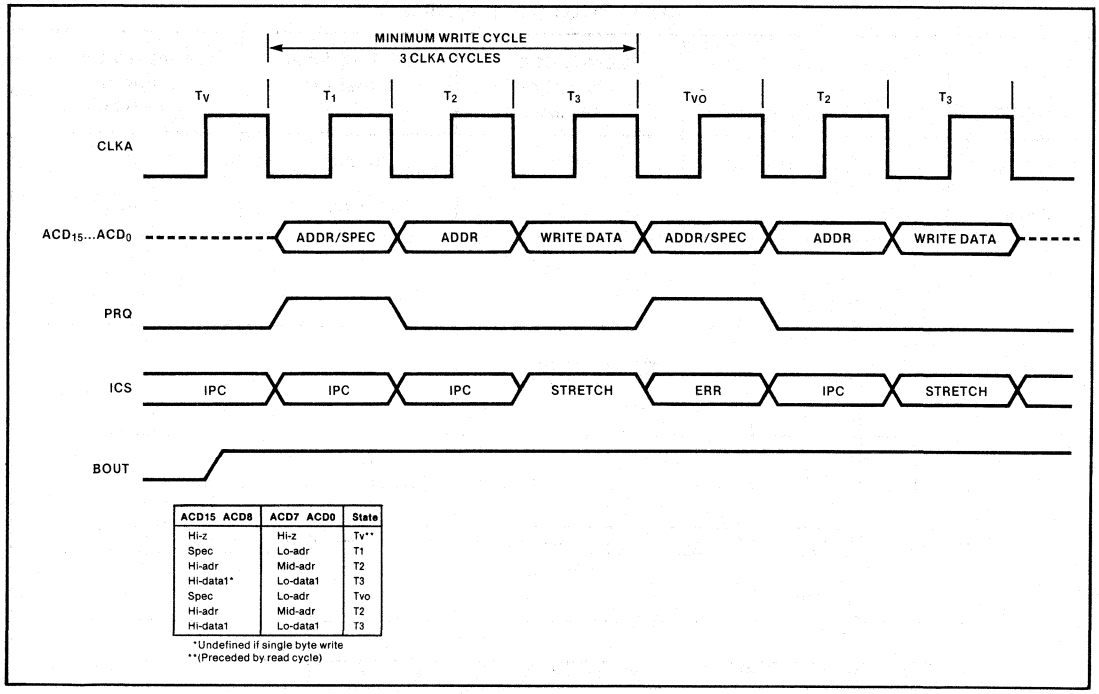

ACD15 ACD8	ACD7 ACD0	State
Hi-z	Hi-z	Tv**
Spec	Lo-adr	T1
Hi-adr	Mid-adr	T2
Hi-data1*	Lo-data1	T3
Spec	Lo-adr	Tvo
Hi-adr	Mid-adr	T2
Hi-data1	Lo-data1	T3

*Undefined if single byte write
**(Preceded by read cycle)

Figure 13. Minimum Write Cycle Timing

171873-16

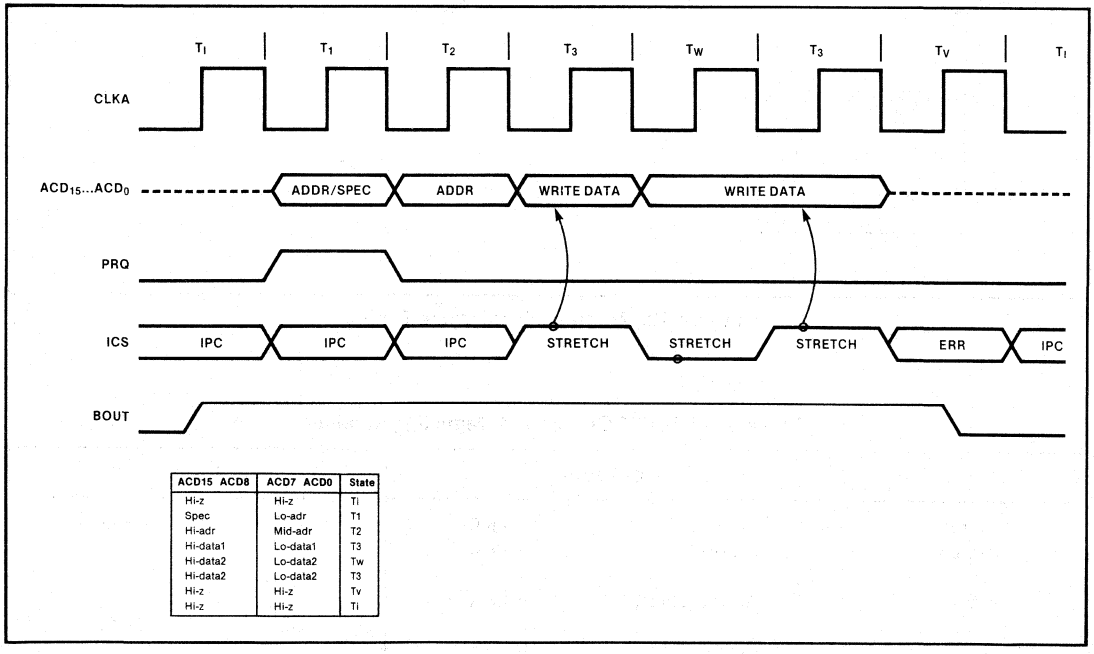

ACD15 ACD8	ACD7 ACD0	State
Hi-z	Hi-z	Ti
Spec	Lo-adr	T1
Hi-adr	Mid-adr	T2
Hi-data1	Lo-data1	T3
Hi-data2	Lo-data2	Tw
Hi-data2	Lo-data2	T3
Hi-z	Hi-z	Tv
Hi-z	Hi-z	Ti

Figure 14. Stretched Write Cycle Timing

171873-17

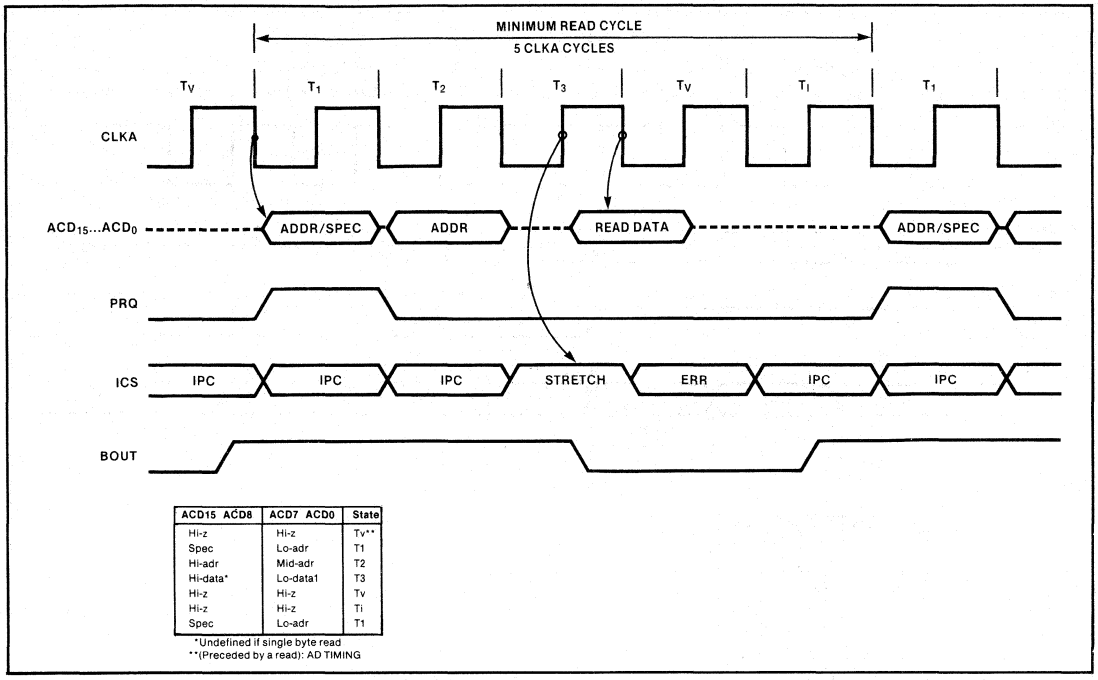

ACD15 ACD8	ACD7 ACD0	State
Hi-z	Hi-z	Tv**
Spec	Lo-adr	T1
Hi-adr	Mid-adr	T2
Hi-data*	Lo-data1	T3
Hi-z	Hi-z	Tv
Hi-z	Hi-z	Ti
Spec	Lo-adr	T1

*Undefined if single byte read
**(Preceded by a read): AD TIMING

Figure 15. Minimum Read Cycle (Not Buffered)

171873-18

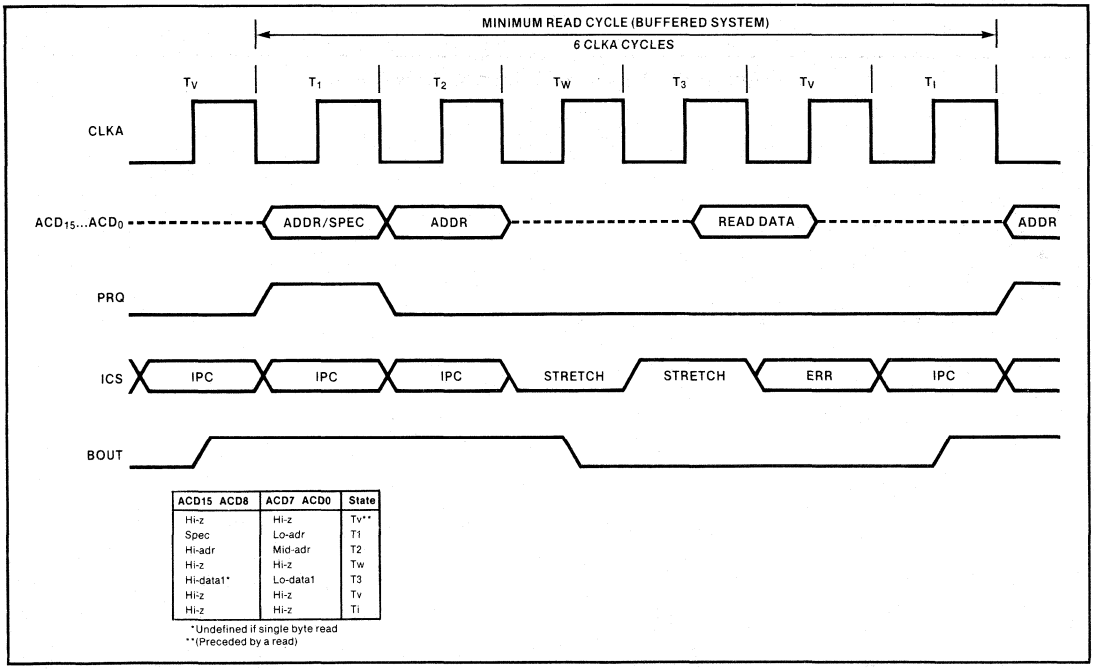

ACD15 ACD8	ACD7 ACD0	State
Hi-z	Hi-z	Tv**
Spec	Lo-adr	T1
Hi-adr	Mid-adr	T2
Hi-z	Hi-z	Tw
Hi-data1*	Lo-data1	T3
Hi-z	Hi-z	Tv
Hi-z	Hi-z	Ti

*Undefined if single byte read
**(Preceded by a read)

Figure 16. Minimum Read Cycle (Buffered System)

171873-19

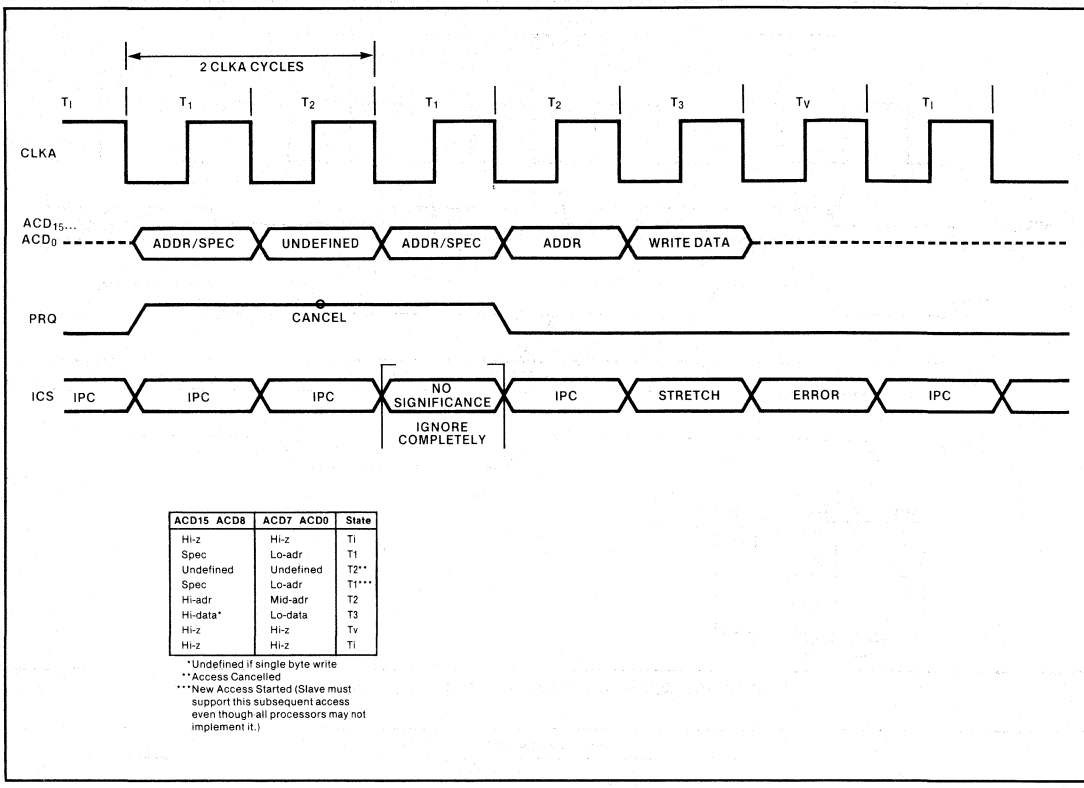

ACD15 ACD8	ACD7 ACD0	State
Hi-z	Hi-z	Ti
Spec	Lo-adr	T1
Undefined	Undefined	T2**
Spec	Lo-adr	T1***
Hi-adr	Mid-adr	T2
Hi-data*	Lo-data	T3
Hi-z	Hi-z	Tv
Hi-z	Hi-z	Ti

*Undefined if single byte write
**Access Cancelled
***New Access Started (Slave must support this subsequent access even though all processors may not implement it.)

Figure 17. Minimum Faulted Access Cycle

171873-20

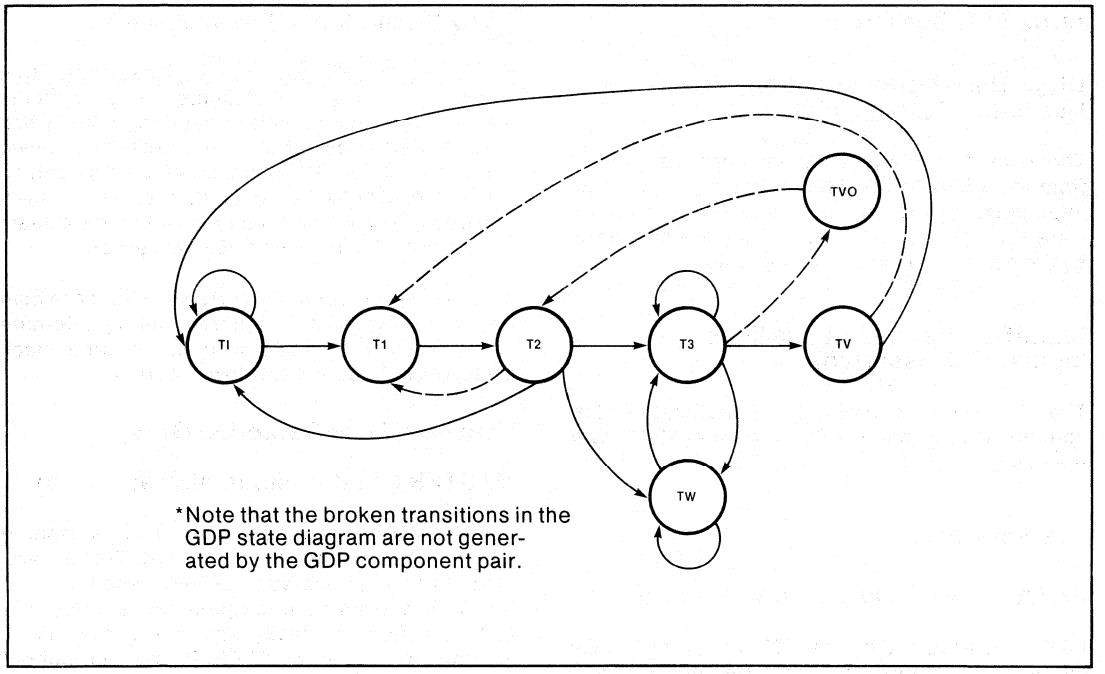

Figure 18. GDP State Diagram 171873-21

43201 PIN DESCRIPTION

Processor Packet Bus Group

ACD_{15}—ACD_0 (Address/Control/Data lines, Inputs, high asserted)

The Processor Packet bus Address/Control/Data lines are the basic communication path between the GDP and its environment. These lines are always inputs to the 43201 and are driven by either the 43202 or the external environment. Note that the 43201 must receive the specification byte from the 43202 during T1 of a bus transaction (Figure 11). As a result, the ACD receivers must be capable of slave timing as well as processor timing. (See Processor Packet bus timing relationships for definition of processor and slave timing).

PRQ (Processor Packet bus Request, Input, high asserted)

The PRQ input is used to initiate a transaction between the GDP and the bus interface. PRQ is normally held low by the 43202 whenever there is no transaction. PRQ is asserted high during the first cycle of a bus transaction and returns low during the second cycle if the transaction is to be completed. The GDP may cancel a bus transaction by asserting PRQ high (instead of returning it low) during the second cycle of the transaction. The GDP will cancel a transaction if a bounds or access rights violation for the transaction has been detected. PRQ is sampled on the rising edge of CLKA.

ICS (Interconnect Status, Input, high asserted)

The ICS input is continually monitored by the 43201 to determine the state of bus transactions. The interpretation of ICS depends on the present cycle of a bus transaction and will indicate one of the following states:

1. Interprocessor communication (IPC) message waiting.
2. Input data invalid, a stretched access.
3. Output data not taken, a stretched access.
4. Bus error in external environment.

Intra-GDP Bus Group

$UI_{15}...UI_0$ (Microinstruction Bus lines, Outputs, high asserted)

These lines are used to transmit microinstructions from the 43201 to the 43202. These pins are high impedance in the checker state (Refer to Hardware Error Detection Group). They are monitored by the hardware error checking logic.

$IS_6...IS_0$ (Interchip Status lines, Inputs, high asserted)

The 43201 receives information pertaining to interchip microprogram status from the 43202 over these lines.

System Group

FATAL/ (Fatal, Output, low asserted)

FATAL/ is asserted by the 43201 under microcode control and is used by the GDP microcode to indicate to the system that the GDP cannot continue due to grossly incorrect information structures in memory. FATAL/ is synchronously asserted low and remains low until the processor is initialized. FATAL/ is not affected by the hardware checking logic.

ALARM/ (Alarm signal, Input, low asserted)

The ALARM/ input signals the occurrence of an unusual system-wide condition (such as power fail). The 43201 does not respond to ALARM/ until it has completed execution of the current 432 instruction, i.e., if any instruction is currently under execution. ALARM/ is active low and is sampled on the rising edge of CLKA.

INIT/ (Initialization, Input, low asserted)

The INIT/ pin is used to establish initialization. INIT/ must be asserted low for at least 10 CLKA cycles before the initial state is reached to allow time for the 43201 to begin execution of a microcode sequence that initializes all of the 43201 and 43202 internal registers. Once this initialization sequence has been completed, normal operation begins.

CLR/ (Clear, Input, low asserted)

Assertion of CLR/ results in a microprogram trap which causes the GDP to immediately terminate any bus transactions or internal operations which may be in progress at the time, reset to a known state, assert FATAL/, and await an IPC (which resets the GDP to the same state as INIT/ assertion does). The IPC will not be serviced for at least five clock cycles following CLR/ assertion.

If CLR/ is continuously asserted low for more than one clock cycle, it is ignored during alternate clock cycles (beginning with the second clock cycle) of continuous CLR/ low assertion.

Hardware Error Detection Group

MASTER (Master, Input, high asserted)

The MASTER pin is used to place the processor in either master or checker mode. MASTER is sampled during initialization (INIT/ asserted). If MASTER is asserted throughout initialization, the 43201 functions normally and drives the microinstruction bus. If MASTER is low throughout initialization, microinstruction bus signals ui_{15}—ui_0 go to their high-impedance state. A 43201 checker does not drive the microinstruction bus; rather, it monitors the bus and compares the data on the bus to its internally generated result, signalling disagreement on its HERR/ line. This hardware error detection capability on the 43201 is provided mainly for test purposes. MASTER should be tied to V_{CC} for normal operation and tied low to enable hardware error detection and disable the bus (ui_{15}—ui_0) outputs.

HERR/ (Hardware Error, Output, low asserted)

HERR/ is a signal produced by the 43201 to indicate disagreement between the data appearing on the micro-instruction bus (ui_{15}—ui_0) and the internally generated result of the 43201. HERR/ is asserted low when disagreement occurs and is valid during CLKA. HERR/ can drive one low power Schottky load.

Clock Group

CLKA, CLKB (Clock A, Clock B, Inputs)

Clock A (CLKA) provides the basic timing reference for the 43201. CLKB overlaps CLKA by nominally 1/4 cycle (90 degrees phase shift). All

external signals are referenced to CLKA. Refer to the AC Electrical Characteristics for exact statement of timing relationships.

Testing Input

RDROM/ (Read ROM, Input, low asserted)

The RDROM/ input line is used to force a sequential read of Read-Only-Memory. If RDROM/ is low when INIT/ goes high, the 43201 goes into a special diagnostic mode. In this mode, with RDROM/ held low, the 43201 microinstruction sequencer steps through the 43201 microprogram ROM, sequentially displaying (but not executing) the 43201 microprogram on the ul_{15}—ul_0 lines. The RDROM/ feature is useful for testing. RDROM/ should be tied to V_{CC} for normal operation and tied low for testing .

Power and Ground Connections

V_{CC} (4 pins)

These pins supply +5 V±10 % referenced to GND pins.

GND (5 pins)

These pins supply ground reference for the 43201.

V_{BB} (Internally Generated)

This pin is connected to the substrate bias voltage of the 43201. An external low leakage 1 microfarad capacitor rated at 5 volts or greater should be used to bypass V_{BB}. V_{BB} is a negative voltage.

N.C. (No Connection, 4 pins)

43202 PIN DESCRIPTION

Processor Packet Bus Group

ACD_{15}—ACD_0 (Address/Control/Data lines, Inputs or Three-state Outputs, high asserted)

The Processor Packet bus Address/Control/Data lines are the basic communication path between the GDP and its environment. These pins are used three ways:

- They may indicate control information for bus transactions,
- They may issue physical addresses generated by the GDP for an access, or
- They may transfer data (either direction).

When the 43202 is in checker mode, the ACD pins are monitored by the hardware error checking logic and are in the high impedance mode.

PRQ (Processor Packet bus Request, Three-state Output, high asserted)

PRQ is used to indicate the presence of a transaction between the GDP and its external environment. Normally low, the PRQ pin is brought high during the same cycle as the first double-byte of address information is being driven onto the ACD pins. PRQ remains high for only one cycle during the access, unless an address development fault occurs. The 43202 will leave PRQ high for a second cycle to indicate the GDP has detected an addressing or segment rights fault in completing address generation. PRQ is checked by the hardware error logic. PRQ is in a high impedance state when the 43202 is in checker mode (see MASTER description).

ICS (Interconnect Status, Input, high asserted)

ICS is an indication to the 43202 from the bus interface circuitry concerning the status of a bus transaction. The interpretation of the ICS state is dependent upon the present cycle of a bus transaction and may indicate:

- Interprocessor communication (IPC) message waiting,
- Input data invalid,
- Output data not taken,
- Bus error in external environment.

BOUT (Enable Buffers for Output, Output, high asserted)

BOUT is used to control external bus transceivers to buffer the 43201, 43202 from the Processor Packet bus load. Though not required, the use of buffers may be desired in systems with heavy loading. BOUT is asserted when information is to leave the 43202 on the ACD lines. BOUT is not checked by the hardware error detection logic.

Intra-GDP Bus Group

ul_{15}—ul_0 (Microinstruction Bus lines, Inputs, high asserted)

The ul_{15}—ul_0 input lines provide the 43202 with microinstruction information sent from the 43201.

IS_6—IS_0 (Interchip Status lines, Outputs, high asserted)

The IS_6—IS_0 lines drive interchip microprogram status information from the 43202 to the 43201. IS_6—IS_0 are not checked by the hardware error detection logic.

System Group

PCLK/ (Processor Clock, Input, low asserted)

PCLK/ is asserted to change the state of two processor timers. The affected timers are called the system timer and the service timer. Assertion of PCLK/ for one cycle causes the system timer to increment and the service timer to decrement. Assertion of PCLK/ for more than one cycle causes the system timer to be cleared and decrements the service timer. For proper operation PCLK/ must be unasserted for at least four clock cycles before being asserted. PCLK/ is synchronous with respect to CLKA, but is generally unrelated to other interface timings.

CLR/ (Clear, Input, low asserted)

Assertion of CLR/ results in a microprogram trap which causes the GDP to immediately terminate any bus transactions or internal operations which may be in progress at the time, reset to a known state, assert FATAL/, and await an IPC (which resets the GDP to the same state as INIT/ assertion does). The IPC will not be serviced for at least five clock cycles following CLR/ assertion.

If CLR/ is continuously asserted low for more than one clock cycle, it is ignored during alternate clock cycles (beginning with the second clock cycle) of continuous CLR/ low assertion.

Hardware Error Detection Group

MASTER (Master, Input, high asserted; 25k nominal pullup on-chip)

The MASTER input determines whether the 43202 is to function as a master or a checker. In master mode, the 43202 functions normally and drives all of its outputs. In checker mode, ACD_{15}—ACD_0 and PRQ enter the high impedance state and BOUT is unconditionally low. A 43202, whether master or checker, monitors the ACD_{15}—ACD_0 and PRQ lines and compares the data on them to its internally generated result, signalling disagreement on its HERR/ line. For normal operation, MASTER may be either left alone or tied high. MASTER must be tied low to disable the ACD_{15}—ACD_0 and PRQ outputs.

HERR/ (Hardware Error, Open Drain Output, low asserted)

HERR/ is asserted low by the 43202 to indicate disagreement between the data appearing on the ACD_{15}—ACD_0 and PRQ pins and the internally generated result of the 43202. HERR/ is valid during CLKA and can normally be asserted by a 43202 every clock cycle. HERR/ is prevented from being asserted low during any clock cycle following a clock cycle in which a CLR/ low assertion is recognized by the 43202. HERR/ requires an external 2.2k ohm nominal pullup resistor.

Clock Group

CLKA, CLKB (Clock A, Clock B, Inputs)

Clock A (CLKA) provides the basic timing reference for the 43202. Clock B (CLKB) overlaps CLKA by nominally 1/4 cycle (90 degrees phase shift). Refer to the ac electrical characteristics for exact statement of timing relationships. All external signals are referenced to CLKA.

Power and Ground Connections

V_{CC} (Power Supply, 4 pins)

These pins supply +5 V ±10%, referenced to GND pins.

GND (Ground, 5 pins)

These pins supply ground reference for the 43202.

N.C. (No Connection, 7 pins)

INSTRUCTION SET SUMMARY

Refer to Table 14 for the iAPX 432 General Data Processor operator set summary.

43201/43202 ELECTRICAL SPECIFICATIONS

Tables 6 through 13 and Figures 19 through 27 provide appropriate timing diagrams and tables to represent the complete electrical specifications for both the 43201 and 43202 components.

Table 6. iAPX 43201 Electrical Specification

Absolute Maximum Ratings	
Ambient Temperature Under Bias	0° C to 70° C
Storage Temperature	−65° C to +150° C
Voltage on Any Pin with respect to GND*	−1V to +7V
Power Dissipation	2.5 Watts
*43201 V_{BB} Pin with respect to GND	−5V to 0V

Table 7. iAPX 43201 Electrical Specification

DC Characteristics

VSS = 0 Volts, VCC = 5 Volts ± 10% Ta = 0° C to 70° C

Symbol	Description	Min	Max	Units
Vili	Input Low Voltage IS6...IS0	−0.3	+0.7	V
Vihi	Input High Voltage IS6...IS0	3.0	VCC+0.5	V
Vilc	Clock Input Low Voltage	−0.3	+0.5	V
Vihc*	Clock Input High Voltage	3.5	VCC+0.5	V
Vil	Input Low Voltage	−0.3	0.8	V
Vih	Input High Voltage	2	VCC+0.5	V
Vol	Output Low Voltage (Microinstruction Lines) (Iol = −0.1 mA)	0	0.35 V	
Voh	Output High Voltage (Microinstruction Lines) (Ioh = 0.1 mA)	3.25	VCC	V
Vol	Output Low Voltage (Iol = 2.0 mA)	—	0.45	V
Voh	Output High Voltage (Ioh = −400 uA)	2.4	VCC	V
Icc	Power Supply Current (Sum of all VCC Pins)	—	400	mA
Iil	Input Leakage Current	—	±10	uA

Table 7. iAPX 43201 Electrical Specification (Cont'd.)

DC Characteristics

VSS = 0 Volts, VCC = 5 Volts ± 10% Ta = 0° C to 70° C

Symbol	Description	Min	Max	Units
Io	Output Leakage Current	—	±10	uA
Iol	@0.45 Vol			
	HERR/	—	.4	mA
	FATAL/	—	4	mA
	OTHER	—	2	mA
Ioh	@2.4 Voh	—	−0.1	mA

* For operation at 5 MHz or slower, the 43201 may be operated with Vihc minimum of 2.7 Volts.

Table 8. iAPX 43201 AC Characteristics

VCC = 5 ± 10% Ta = 0° C to 70° C

Symbol	Description	8 MHz Min	8 MHz Max	5 MHz Min	5 MHz Max	Unit
tcy	Clock Cycle Time	125	1000	200	1000	nsec.
tr, tf	Clock Rise and Fall Time	0	10	0	10	nsec.
t1, t2, t3, t4	Clock Pulse Widths	26	250	45	250	nsec.
tdc	Signal to Clock Set-up Time	5	—	5	—	nsec.
tcd	Clock to Signal Delay Time	—	55	—	85	nsec.
tis	Init to Signal Hold Time	15	—	20	—	nsec.
tie	Init enable Time	10	—	10	—	tcy
tdh	Clock to Signal Hold Time	25	—	35	—	nsec.
t_{OH}	Clock to Signal Output Hold Time	15	—	20	—	nsec.
tsi	Signal to INIT/ Set-up Time	10	—	10	—	nsec.
tuif	Microinstruction Bus Float Time	0	—	0	—	nsec.

The above specifications are subject to the following definitions and test conditions:

1. Note that tcy=t1 + t2 + t3 + t4 + 2*tr + 2*tf.
2. Pins under consideration were subjected to the following purely capacitive loading:
   C1 = 25 pF on HERR/
   C1 = 50 pF on ul15...ul0, IS6...IS0
   C1 = 70 pF on all remaining pins.
3. All timings are measured with respect to the switching level of 1.5 Volts. The switching point of CLKA and CLKB is referenced to the 1.8 Volt level.
4. CLKA and CLKB must be continuously applied for the 43201 to retain its state.

Table 9. iAPX 43201 Capacitance

Symbol	Parameter	Typical	Unit
Cin	Input Capacitance	6	pF
Cout	Output Capacitance	12	pF
Conditions:	fc=1 MHz, Vin=0V, VCC=5V, Ta=25° C Outputs in High Impedance state		

Table 10. iAPX 43202 Electrical Specification

Absolute Maximum Ratings	
Ambient Temperature Under Bias	0° C to 70° C
Storage Temperature	−65° C to +150° C
Voltage on Any Pin with respect to GND	−1V to +7V
Power Dissipation	2.5 Watts

Table 11. iAPX 43202 Electrical Specification

DC Characteristics

VSS = 0 Volts, VCC = 5 Volts ± 10% Ta = 0° C to 70° C

Symbol	Description	Min	Max	Units
Vilc	Clock Input Low Voltage	−0.3	+0.5	V
Vihc*	Clock Input High Voltage	3.5	VCC+0.5	V
Vil	Input Low Voltage	−0.3	+0.8	V
Vih	Input High Voltage	2	VCC+0.5	V
Vili	Input Low Voltage ul15...ul0	−0.3	+0.7	V
Vihi	Input High Voltage ul15...u10	3.0	VCC+0.5	V
Vol	Output Low Voltage (Iol = 4.0 mA) ACD15...ACD0, PRQ (Iol = 8.0 mA) BOUT, HERR/	—	0.45	V
Voh	Output High Voltage (Ioh = −800 uA)	2.4	VCC	V
Voli	Output Low Voltage IS6...IS0 Ioli = 0.1 mA	—	0.35	V
Vohi	Output High Voltage IS6...IS0 Iohi = 0.1 mA	3.25	—	V
Icc	Power Supply Current (Sum of all VCC Pins)	—	455	mA
Ili	Input Leakage Current except MASTER	—	±10	uA
Ilim	Input Leakage on MASTER	—	−400	uA
Ilo	Output Leakage Current Vo = 0.45V .. VCC	—	±10	uA

* For operation at 5 MHz or slower, the 43202 may be operated with V_{ihc} minimum of 2.7 Volts.

Table 12. iAPX 43202 AC Characteristics

VCC = 5 ± 10%						Ta = 0° C to 70° C
Symbol	**Description**	**8 MHz**		**5 MHz**		**Unit**
		Min	**Max**	**Min**	**Max**	
tr, tf	Clock Rise and Fall Time	0	10	0	10	nsec.
t1, t2, t3, t4	Clock Pulse Widths	26	250	45	250	nsec.
tcy	Clock Cycle Time (tcy = t1 + t2 + t3 + t4 + 2*tr + 2*tf)	125	1000	200	1000	nsec.
tdc	Signal to Clock Set-up Time	5	—	5	—	nsec.
tcd	Clock to Signal Delay Time	—	55	—	85	nsec.
tdh	Clock to Signal Hold Time	25	—	35	—	nsec.
toh	Clock to Signal Output Hold Time	15	—	20	—	nsec.
ten	Clock to Signal Output Enable Time	15	—	20	—	nsec.
tdf	Clock to Signal Data Float Time	—	55	—	75	nsec.

The timing characteristics given below assume the following loading on output pins. Loading is given in terms of a fixed capacitance plus a DC current load.

Pins	**Loading**
HERR/	90 pF Iol=8 mA., Open Drain
BOUT	70 pF Iol=8 mA., Ioh=−800 uA
PRQ	70 pF Iol=4 mA., Ioh=−800 uA
IS6...IS0	50 pF MOS only
ACD15...ACD0	70 pF Iol=4 mA., Ioh=−800 uA

All output delays are measured with respect to the falling edge of CLKA except for BOUT. BOUT output delays are measured with respect to the rising edge of CLKA.

All timings are measured with respect to the switching level of 1.5 Volts. The switching point of CLKA and CLKB is referenced to the 1.8V level.

The 43202 is not capable of DC operation. For continuous data and logic state retention the CLKA and CLKB signals must be present.

Table 13. iAPX 43202 Capacitance

Symbol	**Parameter**	**Typical**	**Unit**
Cin	Input Capacitance	6	pF
Cout	Output Capacitance	12	pF
Conditions:	fc=1 MHz, Vin=0, Vout=0, VCC=5.0 V, Ta=25° C. Outputs in High Impedance state		

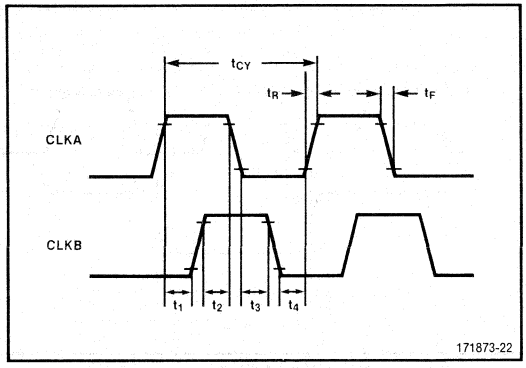

Figure 19. 43201 Clock Input Specification

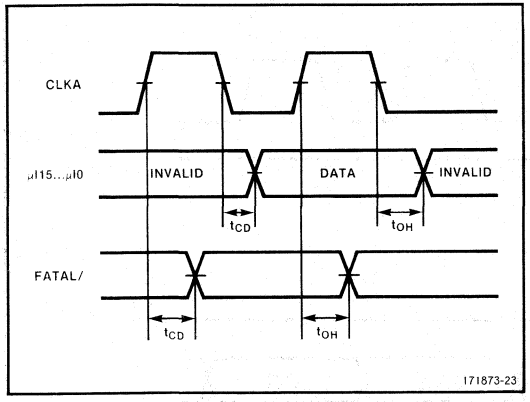

Figure 20. 43201 Output Timing Specification

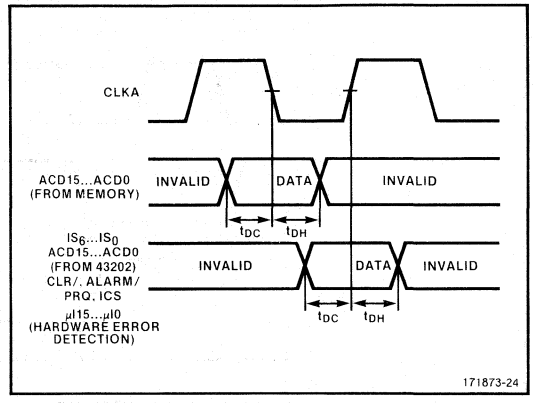

Figure 21. 43201 Input Timing Specification

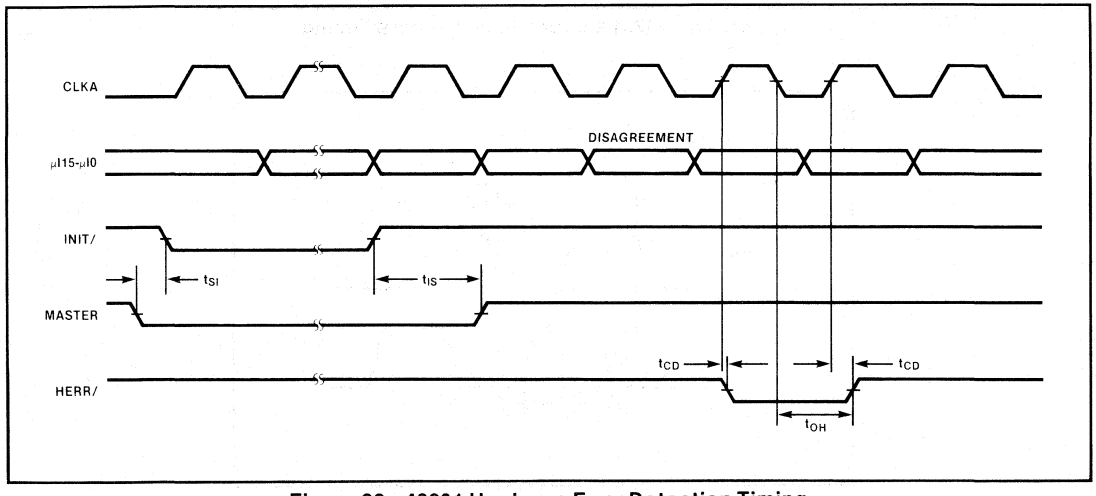

Figure 22. 43201 Hardware Error Detection Timing

171873-25

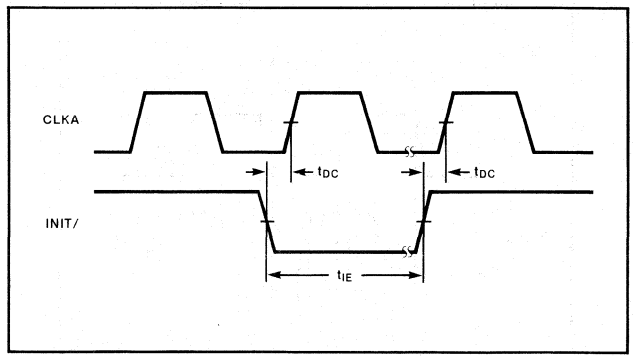

Figure 23. 43201 Initialization Timing 171873-26

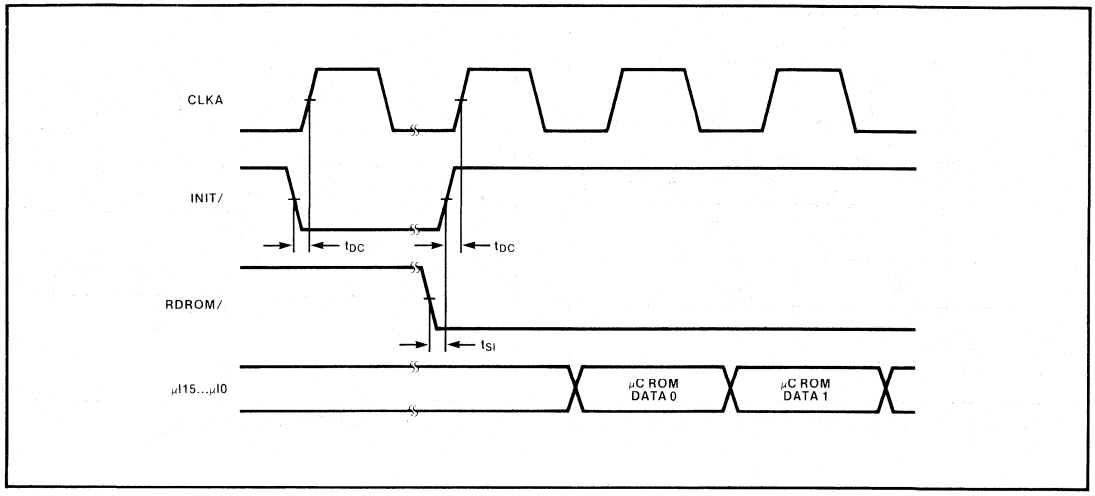

Figure 24. 43201 Microcode Interrogate Timing 171873-27

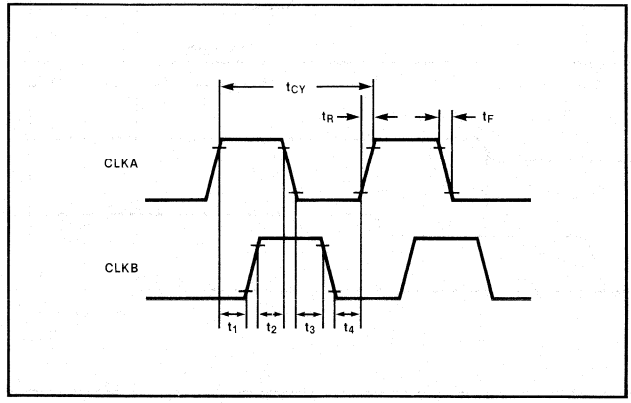

Figure 25. 43202 Clock Input Specification 171873-22

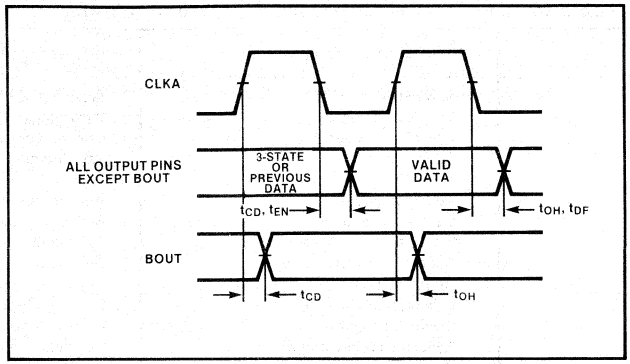

Figure 26. 43202 Output Timing Specification 171873-28

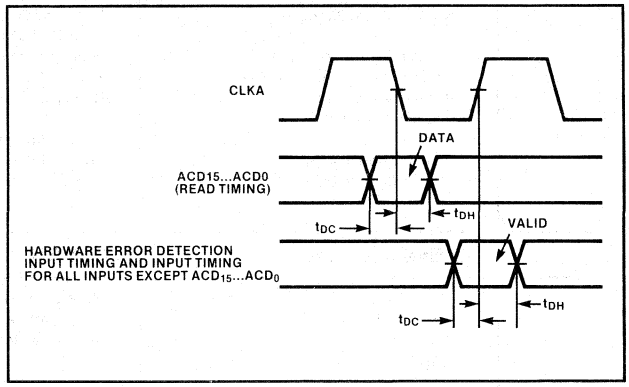

Figure 27. 43202 Input Timing Specification 171873-29

Table 14. General Data Processor Operator Set Summary

Character Operators	Short-Integer Operators	Integer Operators
Move Character	Move Short Integer	Move Integer
Zero Character	Zero Short Integer	Zero Integer
One Character	One Short Integer	One Integer
Save Character	Save Short Integer	Save Integer
AND Character	Add Short Integer	Add Integer
OR Character	Subtract Short Integer	Subtract Integer
XOR Character	Increment Short Integer	Increment Integer
XNOR Character	Decrement Short Integer	Decrement Integer
Complement Character	Negate Short Integer	Negate Integer
Add Character	Multiply Short Integer	Multiply Integer
Substract Character	Divide Short Integer	Divide Integer
Increment Character	Remainder Short Integer	Remainder Integer
Decrement Character	Equal Short Integer	Equal Integer
Equal Character	Not Equal Short Integer	Not Equal Integer
Not Equal Character	Equal Zero Short Integer	Equal Zero Integer
Equal Zero Character	Not Equal Zero Short Integer	Not Equal Zero Integer
Not Equal Zero Character	Greater Than Short Integer	Greater Than Integer
Greater Than Character	Greater Than or Equal Short Integer	Greater Than or Equal Integer
Greater Than or Equai Character	Positive Short Integer	Positive Integer
Convert Character to Short Ordinal	Negative Short Integer	Negative Integer
	Convert Short Integer to Integer	Convert Integer to Short Integer
	Convert Short Integer to Temporary Real	Convert Integer to Ordinal
		Convert Integer to Temporary Real

Short-Ordinal Operators	Ordinal Operators	Short-Real Operators
Move Short Ordinal	Move Ordinal	Move Short Real
Zero Short Ordinal	Zero Ordinal	Zero Short Real
One Short Ordinal	One Ordinal	Save Short Real
Save Short Ordinal	Save Ordinal	Add Short Real—Short Real
AND Short Ordinal	AND Ordinal	Add Short Real—Temporary Real
OR Short Ordinal	OR Ordinal	Add Temporary Real—Short Real
XOR Short Ordinal	XOR Ordinal	Subtract Short Real—Short Real
XNOR Short Ordinal	XNOR Ordinal	Subtract Short Real—Temporary Real
Complement Short Ordinal	Complement Ordinal	Subtract Temporary Real—Short Real
Extract Short Ordinal	Extract Ordinal	Multiply Short Real—Short Real
Insert Short Ordinal	Insert Ordinal	Multiply Short Real—Temporary Real
Significant Bit Short Ordinal	Significant Bit Ordinal	Multiply Temporary Real—Short Real
Add Short Ordinal	Add Ordinal	Divide Short Real—Short Real
Subtract Short Ordinal	Subtract Ordinal	Divide Short Real—Temporary Real
Increment Short Ordinal	Increment Ordinal	Divide Temporary Real—Short Real
Decrement Short Ordinal	Decrement Ordinal	Negate Short Real
Multiply Short Ordinal	Multiply Ordinal	Absolute Value Short Real
Divide Short Ordinal	Divide Ordinal	
Remainder Short Ordinal	Remainder Ordinal	
Equal Short Ordinal	Equal Ordinal	
Not Equal Short Ordinal	Not Equal Ordinal	
Equal Zero Short Ordinal	Equal Zero Ordinal	
Not Equal Zero Short Ordinal	Not Equal Zero Ordinal	
Greater Than Short Ordinal	Greater Than Ordinal	
Greater Than or Equal Short Ordinal	Greater Than or Equal Ordinal	
Convert Short Ordinal to Character	Convert Ordinal to Short Ordinal	
Convert Short Ordinal to Ordinal	Convert Ordinal to Integer	
Convert Short Ordinal to Temporary Real	Convert Ordinal to Temporary Real	

Table 14. General Data Processor Operator Set Summary (Cont'd.)

Short-Real Operators	Real Operators	Temporary-Real Operators
Equal Short Real Equal Zero Short Real Greater Than Short Real Greater Than or Equal Short Real Positive Short Real Negative Short Real Convert Short Real to Temporary Real	Move Real Zero Real Save Real Add Real—Real Add Real—Temporary Real Add Temporary Real—Real Subtract Real—Real Subtract Real—Temporary Real Subtract Temporary Real—Real Multiply Real—Real Multiply Real—Temporary Real Multiply Temporary Real—Real Divide Real—Real Divide Real—Temporary Real Divide Temporary Real—Real Negate Real Absolute Value Real Equal Real Equal Zero Real Greater Than Real Greater Than or Equal Real Positive Real Negative Real Convert Real to Temporary Real	Move Temporary Real Zero Temporary Real Save Temporary Real Add Temporary Real Subtract Temporary Real Multiply Temporary Real Divide Temporary Real Remainder Temporary Real Negate Temporary Real Square Root Temporary Real Absolute Value Temporary Real Equal Temporary Real Equal Zero Temporary Real Greater Than Temporary Real Greater Than or Equal Temporary Real Positive Temporary Real Negative Temporary Real Convert Temporary Real to Ordinal Convert Temporary Real to Integer Convert Temporary Real to Short Real Convert Temporary Real to Real
Access Descriptor Movement Operators	**Rights Manipulation Operators**	**Type Definition Manipulation Operators**
Copy Access Descriptor Null Access Descriptor	Amplify Rights Restrict Rights	Create Public Type Create Private Type Retrieve Public Type Representation Retrieve Type Representation Retrieve Type Definition
Refinement Operators	**Segment Creation Operators**	**Access Path Inspection Operators**
Create Generic Refinement Create Typed Refinement Retrieve Refined Object	Create Data Segment Create Access Segment Create Typed Segment Create Access Descriptor	Inspect Access Descriptor Inspect Access
Object Interlock Operators	**Branch Operators**	**Interconnect Operators**
Lock Object Unlock Object Indivisibly Add Short Ordinal Indivisibly Add Ordinal Indivisibly Insert Short Ordinal Indivisibly Insert Ordinal	Branch Branch True Branch False Branch Indirect Branch Intersegment Branch Intersegment without Trace Branch Intersegment and Link	Move to Interconnect Move from Interconnect
Process Communication Operators	**Processor Communication Operators**	**Context Communication Operators**
Send Receive Conditional Send Conditional Receive Surrogate Send Surrogate Receive Delay Read Process Clock	Send to Processor Broadcast to Processors Read Processor Status and Clock	Enter Access Segment Enter Global Access Segment Set Context Mode Call Context Call Context with Message Return from Context

iAPX 43203
VLSI INTERFACE PROCESSOR

PRELIMINARY

- **Fully Independent and Decentralized I/O**
- **Buffered Data Path for High-Speed Burst-Mode Transfers**
- **Initialization/Diagnostic Interface to 432 Systems**
- **Multiple 43203's per System Provide Incremental I/O Capacity**
- **Protected I/O Interface to 432 Memory**
- **Silicon Operating System Instruction Set Extensions for Attached iAPX Processors**
- **Multibus™ System Compatible Interface**
- **Functional Redundancy Checking Mode for Hardware Error Detection**

The Intel 43203 Interface Processor (IP) provides I/O facilities in iAPX 432 micromainframe systems employing peripheral subsystems. An IP maps a portion of the peripheral subsystem address space into iAPX 432 system memory. As any iAPX 432 processor, the IP operates in an object-oriented, capability-based, multiprocessing environment.

The 43203 is a VLSI device, fabricated with Intel's highly reliable +5 volt, depletion load, N-channel, silicon gate HMOS technology, and is packaged in a 64-pin Quad In-Line Package (QUIP). Refer to Figure 1 for the QUIP representation of the 43203 pin configuration.

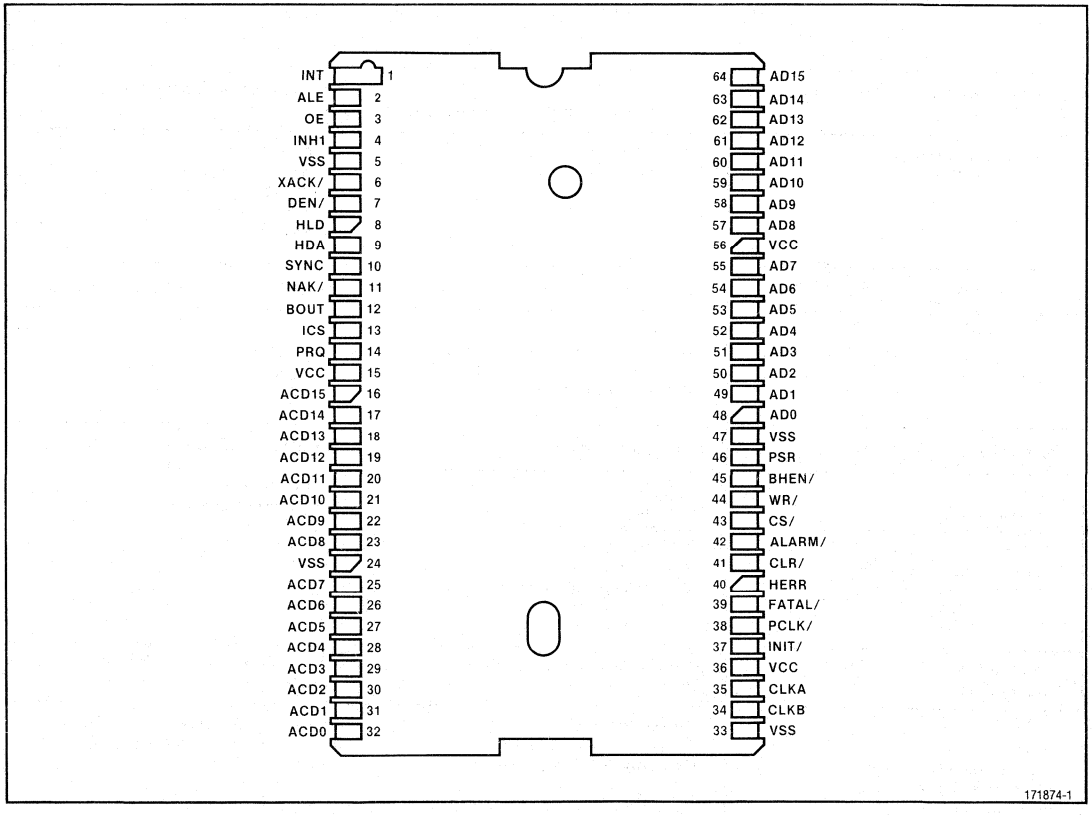

Figure 1. iAPX 43203 Interface Processor Pin Configuration

The following are trademarks of Intel Corporation and may be used only to identify Intel products: BXP, CREDIT, i, ICE, iCS, i_m, Insite, Intel, int_el, Intelevision, Intellec, iRMX, iSBC, iSBX, Library Manager, MCS, Megachassis, Micromap, Multibus, Multimodule, PROMPT, Promware, RMX/80, System 2000, UPI, μScope, and the combination of ICE, iCS, iRMX, iSBC, iSBX, MCS, or RMX and a numerical suffix.
© Intel Corporation 1981

FUNCTIONAL DESCRIPTION

The block diagram shown in Figure 2 illustrates the internal architecture of the Interface Processor. Figure 3 represents the Interface Processor as a logical device and illustrates the signal interface to the Processor Packet bus (left side) and the peripheral subsystem (right side). The Interface Processor (IP) operates in conjunction with an Attached Processor (AP) to form the logical I/O processor of an iAPX 432 system.

The IP acts as a slave to the AP, and maps a portion of the AP's peripheral subsystem address space into iAPX 432 system memory with the same protection mechanisms as any iAPX 432 processor. Five peripheral subsystem (PS) memory subranges may be mapped into iAPX 432 memory segments. These five windows (labeled 0 through 4) allow the AP to reference iAPX 432 memory with logical addresses or, in special circumstances, with direct, 24-bit physical addresses.

A BASIC I/O MODEL

A typical application based on the iAPX 432 microprocessor family consists of a main system and one or more peripheral subsystems. Figure 4 illustrates a hypothetical configuration that employs two peripheral subsystems. The main system hardware is composed of one or more iAPX 432 general data processors (GDPs) and a common memory that is shared by these processors. The main system software is a collection of one or more processes that execute on the GDP(s).

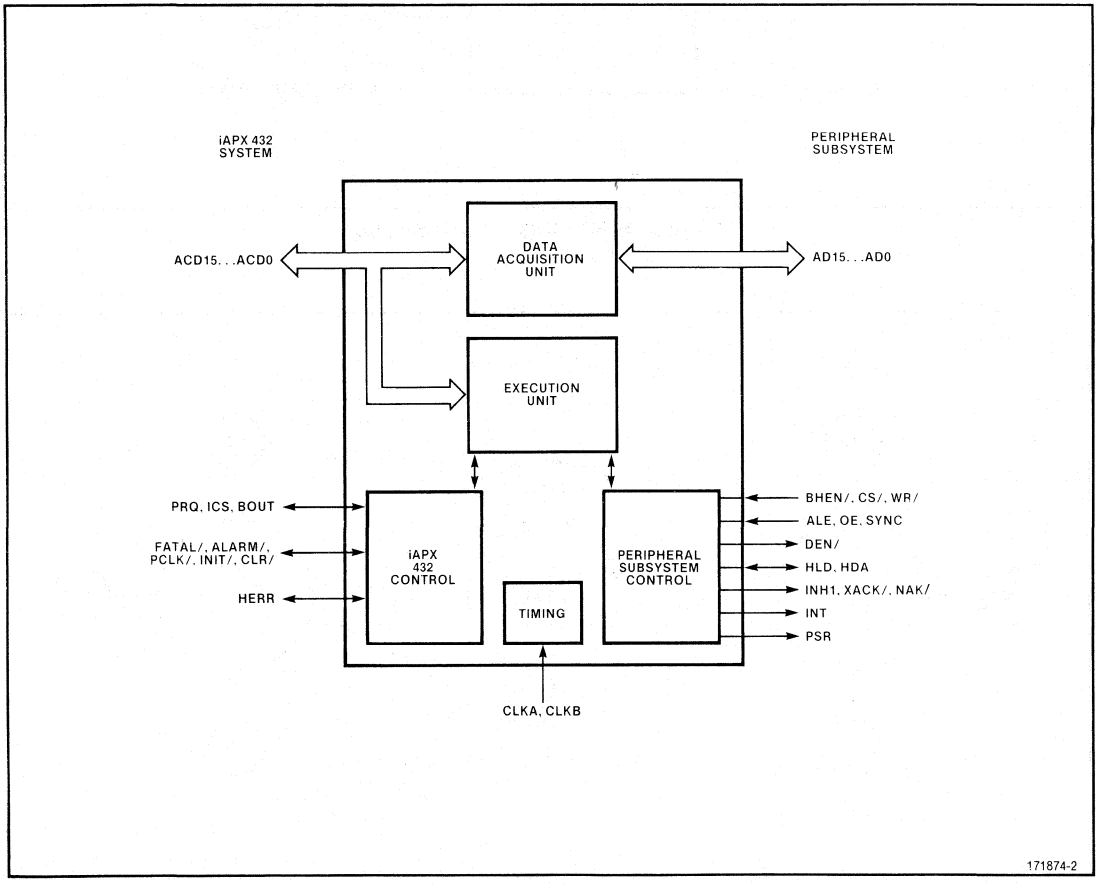

Figure 2. iAPX 43203 IP Functional Block Diagram

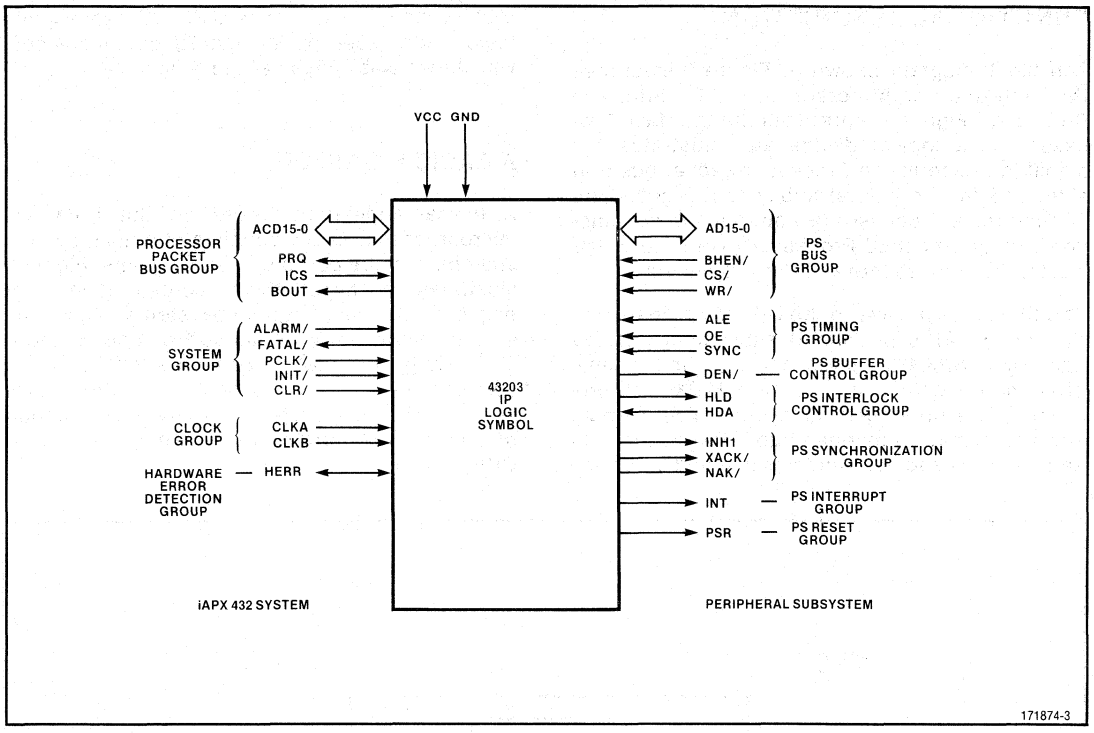

Figure 3. iAPX 43203 IP Logic Symbol

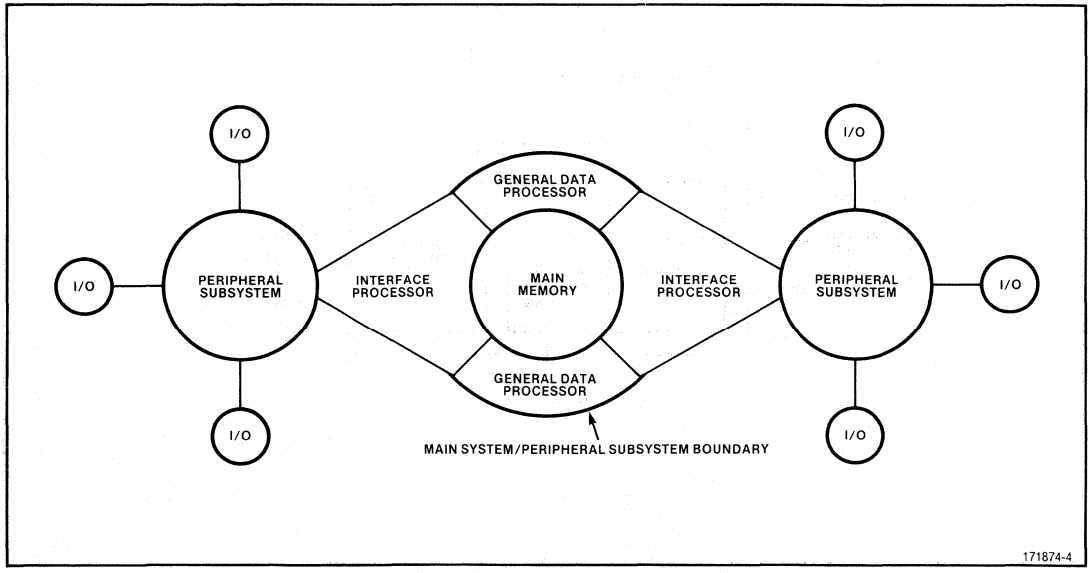

Figure 4. Main System and Peripheral Subsystem

A fundamental principle of the iAPX 432 architecture is that the main system environment is self-contained; neither processors nor processes have any direct contact with the "outside world." Conceptually, the main system is enclosed by a wall that protects objects in memory from possible damage by uncontrolled I/O operations.

In an iAPX 432-based system, the bulk of processing required to support input/output operations is delegated to peripheral subsystems; this includes device control, timing, interrupt handling and buffering. A peripheral subsystem is an autonomous computer system with its own local memory, I/O devices and controllers, at least one processor, and software. The number of peripheral subsystems employed in any given application depends on the I/O-intensiveness of the application, and may be varied with changing needs, independent of the number of GDPs in the system.

A peripheral subsystem resembles a mainframe channel in that it assumes responsibility for low-level I/O device support, executing in parallel with main system processor(s). Unlike a simple channel, however, each peripheral subsystem can be configured with a complement of hardware and software resources that precisely fits application cost and performance requirements. In general, any system that can communicate over a standard 8- or 16-bit microcomputer bus such as Intel's Multibus design may serve as an iAPX 432 peripheral subsystem.

A peripheral subsystem is attached to the main system by means of an IP. At the hardware level, the IP presents two separate bus interfaces. One of these is the standard iAPX 432 Processor Packet bus and the other is a very general interface.

To support the transfer of data through the wall that separates a peripheral subsystem from the main system, the IP provides a set of software-controlled windows. A window is used to expose a single object in main system memory so that its contents may be transferred to or from the peripheral subsystem.

The IP also provides a set of functions that are invoked by software. While the operation of these functions varies considerably, they generally permit objects in main system memory to be manipulated as entities, and enable communication between main system processes and software executing in a peripheral subsystem.

It is important to note that both the window and function facilities utilize and strictly enforce the standard iAPX 432 addressing and protection systems. Thus, a window provides protected access to an object, and a function provides a protected way to operate in the main system. The IP permits data to flow across the peripheral subsystem boundary while preserving the integrity of the main system.

As Figure 5 illustrates, input/output operations in an iAPX 432 system are based on the notion of passing messages between main system processes and device interfaces located in a peripheral subsystem. A device interface is considered to be the hardware and software in the peripheral subsystem that is responsible for managing an I/O device. An I/O device is considered to be a "data repository," which may be a real device (e.g., a terminal), a file, or a pseudo-device (e.g., a spooler).

A message sent from a process that needs an I/O service contains information that describes the requested operation (e.g., "read file XYZ"). The device interface interprets the message and carries out the operation. If an operation requests input data, the device interface returns the data as a message to the originating process. The device interface may also return a message to positively acknowledge completion of a request.

A very general and very powerful mechanism for passing messages between processes is inherent in the iAPX 432 architecture. A given peripheral subsystem may, or may not, have its own message facility, but in any case, such a facility will not be directly compatible with the iAPX 432's. By interposing a peripheral subsystem interface at the subsystem boundary, the standard IP communication system can be made compatible with any device interface (see Figure 6).

iAPX 432 SYSTEM INTERFACE

The IP exists in both the protected environment of the iAPX 432, and the conventional environment of the peripheral subsystem. Because of this, an IP is able to provide a pathway over which data may flow between the iAPX 432 system and the external subsystem. The IP operates at the boundary between the systems, providing compatibility and protection. In this position, the Interface Processor presents two different views of itself, one to software and processors in the iAPX 432 environment and another to its attached processor.

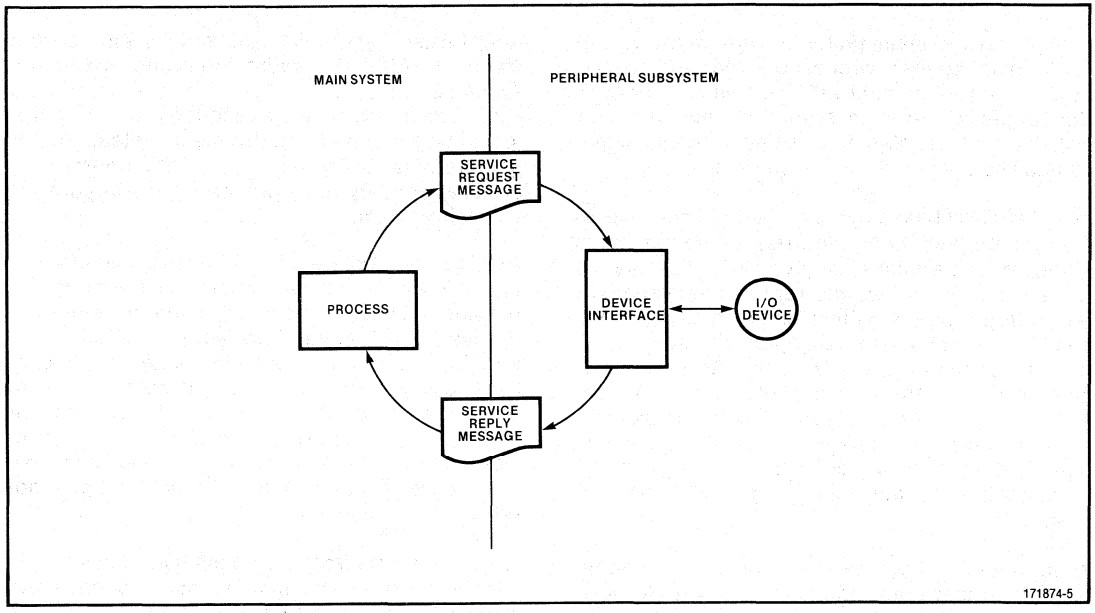

Figure 5. Basic IO Service Cycle

From the iAPX 432 side, an IP looks and behaves very much like any other processor. It attaches to the Processor Packet bus in the same way as a GDP. Within the iAPX 432 memory, the IP supports an execution environment that is compatible with, and largely identical to, the GDP. Thus, the IP recognizes and manipulates system objects representing processors, processes, ports, etc. It supports and enforces the iAPX 432's access control mechanisms, and provides full interprocess and interprocessor communication facilities.

The principal difference between the two processors is that the GDP manipulates its environment in response to the instruction it fetches, while the IP operates under the direction of its attached processor. Indeed, the IP may be said to extend the instruction set of the Attached Processor (AP) so that it may function in the environment of the iAPX 432 system.

PERIPHERAL SUBSYSTEM INTERFACE

A peripheral subsystem interface (PSI) is a collection of hardware and software that acts as an adapter that enables message-based communication between a process in the main system and a device interface in a peripheral subsystem (see Figure 6). Viewed from the iAPX 432 side, the peripheral subsystem interface appears to be a process. The peripheral subsystem interface may be designed to present any desired appearance to a device interface. For example, it may look like a collection of tasks, or like a collection of subroutines.

Hardware

The PSI hardware consists of an IP, an AP, and local memory (see Figure 7). To improve performance, these may be augmented by a DMA controller. The AP and the IP work together as a team, each providing complementary facilities. Considered as a whole, the AP/IP pair may be thought of as a logical I/O processor that supports software operations in both the main system and the peripheral subsystem.

ATTACHED PROCESSOR

Almost any general-purpose CPU, such as an 8085, an iAPX 86 or an iAPX 88 can be used as an AP. The AP need not be dedicated exclusively to working with the IP.

It may, for example, also execute device interface software. Thus, the AP may be the only CPU in the peripheral subsystem, or it may be one of several.

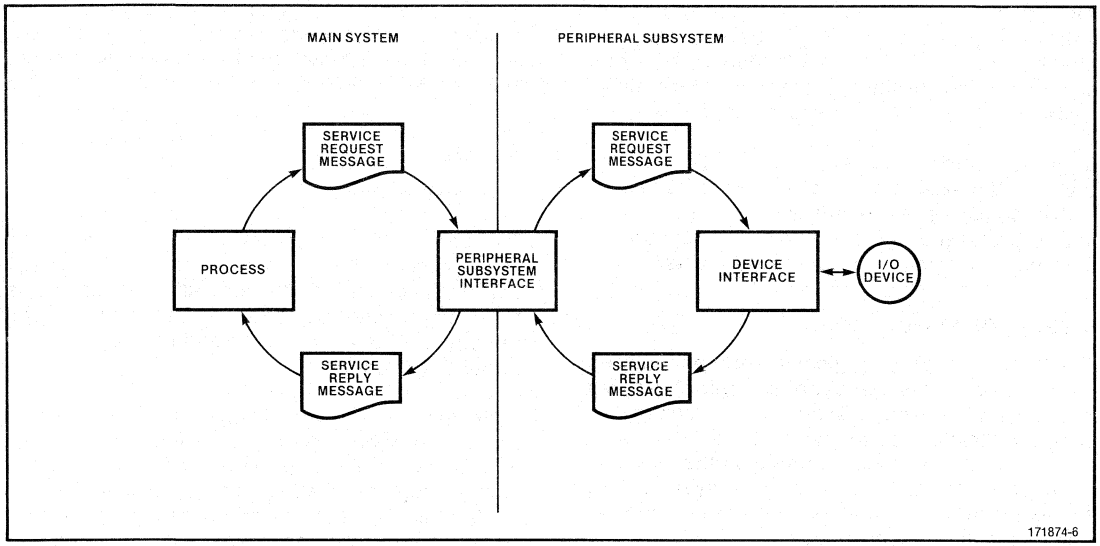

Figure 6. Peripheral Subsystem Interface

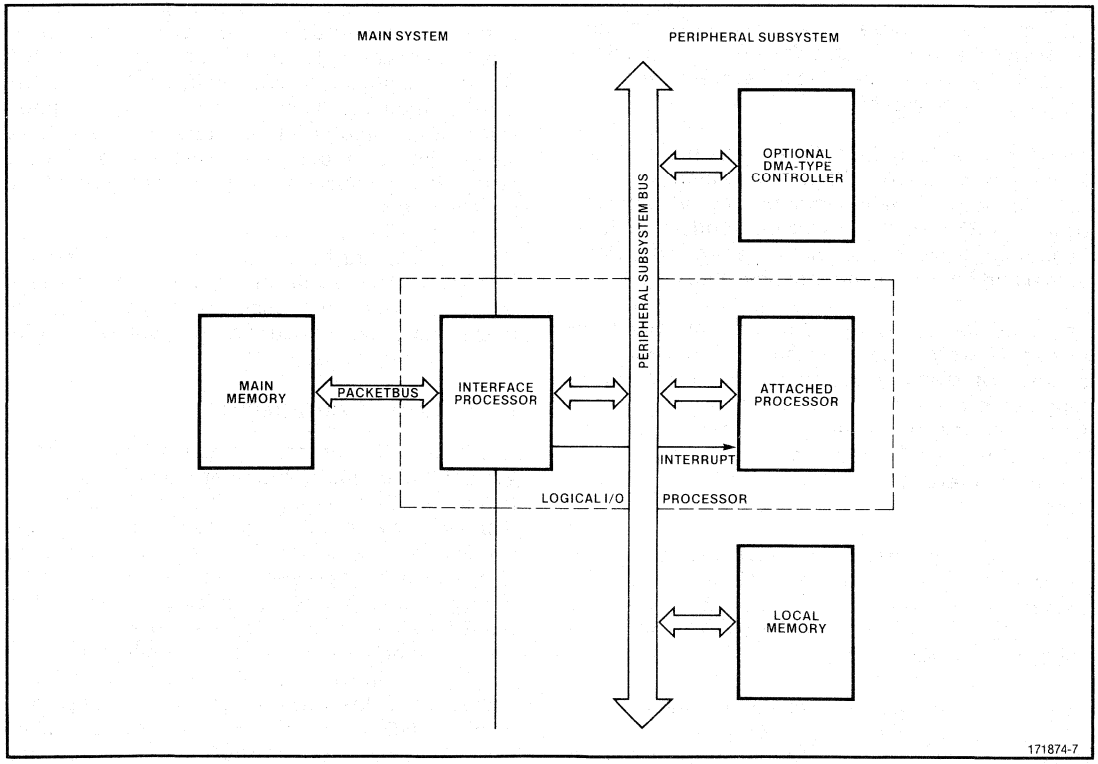

Figure 7. Peripheral Subsystem Interface Hardware

As Figure 7 shows, the AP is "attached" to the interface processor in a logical sense only. The physical connections are standard bus signals and one interrupt line (which would typically be routed to the AP via an interrupt controller).

Continuing the notion of the logical I/O processor, the AP fetches instructions, and provides the instructions needed to alter the flow of execution, and to perform arithmetic, logic and data transfer operations within the peripheral subsystem.

INTERFACE PROCESSOR

The IP completes the logical I/O processor by providing data paths between the peripheral subsystem and the main system, and by providing functions that effectively extend the AP's instruction set so that software running on the logical I/O processor can operate in the main system. Since these facilities are software-controlled, they are discussed in the next section.

As Figure 7 shows, the IP presents both a peripheral subsystem bus interface and a standard iAPX 432 Processor Packet bus interface. By bridging the two buses, the IP provides the hardware link that permits data to flow under software control between the main system and the peripheral subsystem.

The IP connects to the main system in exactly the same way as a GDP. Thus, in addition to being able to access main memory, the IP supports other iAPX 432 hardware-based facilities, including processor communication, the alarm signal and functional redundancy checking.

The IP is connected to the peripheral subsystem bus as if it were a memory component; it occupies a block of memory addresses up to 64K bytes long. Like a memory, the IP behaves passively within the peripheral subsystem (except as noted below). It is driven by peripheral subsystem memory references that fall within its address range.

While the IP generally responds like a memory component, it also provides an interrupt request signal. The interface processor uses this line to notify its AP that an event has occurred which requires its attention.

To summarize, the AP and the IP interact with each other by means of address references generated by the AP and interrupt requests generated by the IP. Since the IP responds to memory references, other active peripheral subsystem agents (bus masters), such as DMA controllers, may obtain access to main system memory via the IP.

Software

IP CONTROLLER

The peripheral subsystem interface is managed by software, referred to as the IP controller. The IP controller executes on the AP and uses the facilities provided by the AP and the IP to control the flow of data between the main system and the peripheral subsystem.

While there are no actual constraints on the structure of the IP controller, organizing it as a collection of tasks running under the control of a multitasking operating system (such as an RMX-80 or iRMX-86 operating system) can simplify software development and modification. This type of organization supports asynchronous message-based communication within the IP controller, similar to the iAPX 432's intrinsic interprocessor communication facility. Extending this approach to the device interface as well results in a consistent, system-wide communication model. However, communication within the IP controller and between the IP controller and device interfaces, is completely application-defined. It may also be implemented via synchronous procedure calls, with "messages" being passed in the form of parameters.

However it is structured, the IP controller interacts with the main system through facilities provided by the interface processor. There are three of these facilities: execution environments, windows, and functions.

EXECUTION ENVIRONMENTS

The IP provides an environment within the main system that supports the operation of the IP controller in that system. This environment is embodied in a set of system objects that are used and manipulated by the IP. At any given time, the IP controller is represented in main memory by a process object and a context object. Like a GDP, the IP itself is represented by a processor object. Representing the IP and its controlling software like this creates an execution environment that is analogous to the environment of a process running on a GDP. This environment provides a standard framework for addressing, protection and communication within the main system.

Like a GDP, an IP actually supports multiple process environments. The IP controller selects the environment in which a function is to be executed. This permits, for example, the establishment of separate environments corresponding to individual device interface tasks in the peripheral subsystem. If an error occurs while the IP controller is executing a function on behalf of one device interface, that error is confined to the associated process, and processes associated with other device interfaces are not affected.

WINDOWS

Every transfer of data between the main system and a peripheral subsystem is performed with the aid of an IP window. A window defines a correspondence, or mapping, between a subrange of peripheral subsystem memory addresses (within the range of addresses occupied by the IP) and an object in main system memory (see Figure 8). When an agent in the peripheral subsystem (e.g., the IP controller) reads a local windowed address, it obtains data from the associated object; writing into a windowed address transfers data from the peripheral subsystem to the windowed object.

The action of the IP, in mapping the peripheral subsystem address to the main system object, is transparent to the agent making the reference; as far as it is concerned, it is simply reading or writing local memory.

Since a window is referenced like local memory, any individual transfer may be between an object and local memory, an object and a processor register, or an object and an I/O device. The

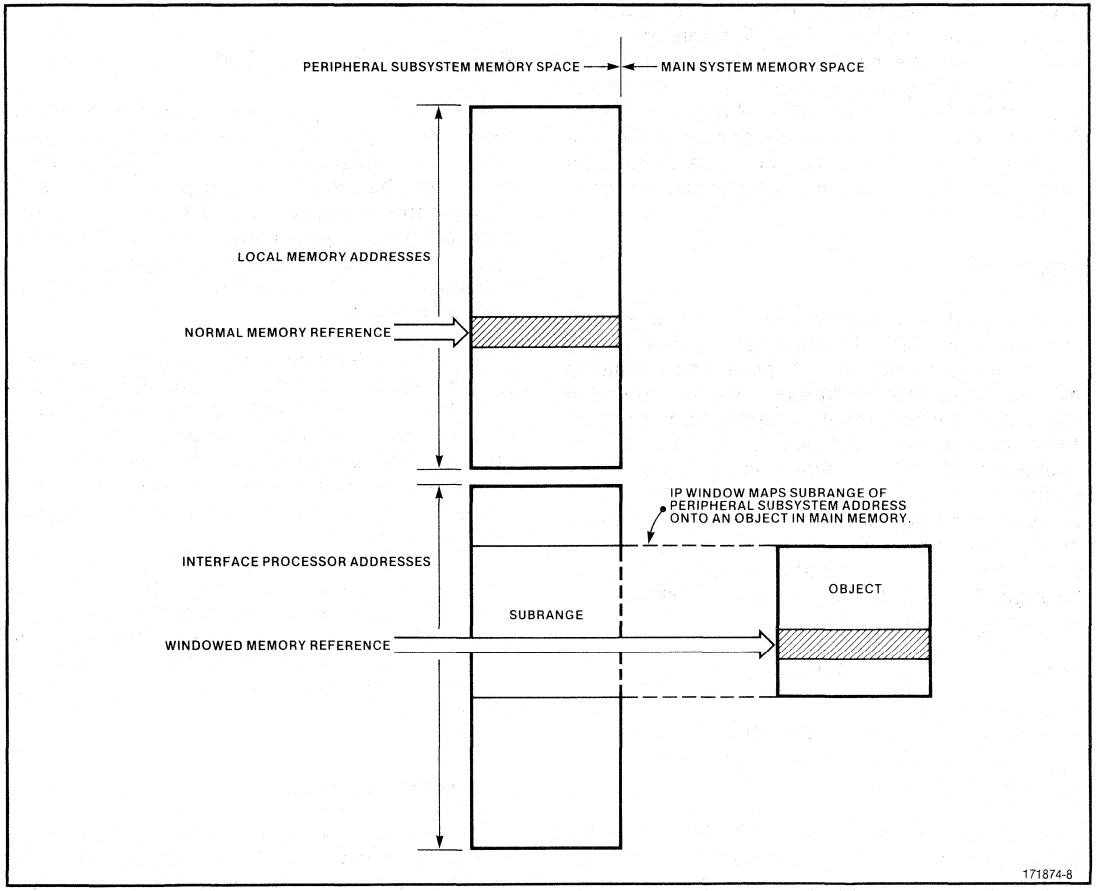

Figure 8. Interface Processor Window

latter may be appealing from the standpoint of "efficiency," but it should be considered with caution. Using a window to directly "connect" an I/O device and an object in main memory has the undesirable effect of propagating the real-time constraints imposed by the device beyond the subsystem boundary into the main system. It may seriously complicate error recovery as well. Finally, since there is a finite number of windows, most applications will need to manage them as scarce resources that will not always be instantly available. This means that at least some I/O device transfers will have to be buffered in local memory until a window becomes available. It may be simplest to buffer all I/O device transfers and use the windows to transfer data between local memory and main system memory.

There are four IP windows that may be mapped onto four different objects. The IP controller may alter the windows during execution to map different subranges and objects. References to windowed subranges may be interleaved and may be driven by different processors in the peripheral subsystem. For example, the AP and a DMA controller may be driving transfers concurrently, subject to the same bus arbitration constraints that would apply if they were accessing local memory.

FUNCTIONS

A fifth window provides the IP controller with access to the IP's function facility. By writing operands and an opcode into predefined locations in this window's subrange, the IP controller requests the IP to execute a function on its behalf. This procedure is very similar to writing commands and data to a memory-mapped peripheral controller (e.g., a floppy disk controller). Upon completion of the function, the IP provides status information that the IP controller can read through the window. The IP can perform transfer requests through the other four windows while it is executing a function.

The IP's function set permits the IP controller to:

- alter windows;
- exchange messages with GDP processes via the standard 432 communication facility;
- manipulate objects.

These functions may be viewed as instruction set extensions to the AP, which permit the IP controller to operate in the main system. The combination of the IP's function set and windows, the AP's instruction set, and possibly additional facilities provided by a peripheral subsystem operating system, permits the construction of powerful IP controllers that can relieve the main system of much I/O-related processing. At the same time, by utilizing only a subset of the available IP functions, relatively simple IP controllers can also be built (in cases where this approach is more appropriate).

SUPPLEMENTARY INTERFACE PROCESSOR FACILITIES

The preceding sections describe the IP as it is used most of the time. The IP provides two additional capabilities that are typically used less frequently, and only in exceptional circumstances. These are physical reference mode and interconnect access.

Physical Reference Mode

The IP normally operates in logical reference mode; this mode is characterized by its object-oriented addressing and protection system. There are times when logical referencing is impossible because the objects used by the hardware to perform logical-to-physical address development are absent (or, less likely, are damaged). In these situations, the IP can be used in physical reference mode.

In physical reference mode, the IP provides a reduced set of functions. Its windows operate as in logical reference mode, except that they are mapped onto memory segments (rather than objects) that are specified directly with 24-bit addresses. In this respect, physical reference mode is similar to traditional computer addressing techniques.

Physical reference mode is most often employed during system initialization to load binary images of objects from a peripheral subsystem into main memory. Once the required object images are available, processors can begin normal logical reference mode operations.

Interconnect Access

In addition to memory, the iAPX 432 architecture defines a second address space called the processor-memory interconnect address space. One of the IP windows is software-switchable to

either space. In logical reference mode, the interconnect space is addressed in the same object-oriented manner as the memory space, with the IP automatically performing the logical-to-physical address development. In physical reference mode, the interconnect space is addressed as an array of 16-bit registers, with a register selected by a 24-bit physical address.

iAPX 432 INFORMATION STRUCTURE

The following information describes the requirements placed on the logical structure of the iAPX 432 hardware environment. These requirements are concerned directly with the constraints of physical memory, the type of data transferred, and the structure of the data types. These requirements are common to the iAPX 432 family of processors. (Any pin notations called out in this information are described in the 43203 Pin Description section of this data sheet).

Any 432 processor in the system can access all the contents of physical memory. This section describes how information is represented and accessed.

Memory

The iAPX 432 implements a two-level memory structure. The software system exists in a segmented environment in which a logical address specifies the location of a data item. The processor automatically translates this logical address into a physical address for accessing the value in physical memory.

Physical Addressing

Logical addresses are translated by the processor into physical addresses. Physical addresses are transmitted to memory by a processor to select the beginning byte of a memory value to be referenced. A physical address is 24 binary bits in length. This results in a maximum physical memory of 16 Megabytes.

Data Formats

When a processor executes the instructions of an operation within a context, operands found in the logical address space of the context may be manipulated. An individual operand may occupy one, two, four, eight, or ten bytes of memory (byte, double byte, word, double word, or extended word, respectively). All operands are referenced by a logical address as described above. The displacement in such an address is the displacement in bytes from the base address of the data segment to the first byte of the operand. For operands consisting of multiple bytes, the address locates the low-order byte while the higher-order bytes are found at the next higher consecutive addresses.

DATA REPRESENTATION

An iAPX 432 convention has been adopted for representing data operands stored in memory. The bits in a field are numbered by increasing numeric significance, with the least-significant bit shown on the right. Increasing byte addresses are shown from right to left. Examples of the five basic data lengths used in the iAPX 432 system are shown in Figure 9.

DATA POSITIONING

The data operand types shown in Figure 9 may be aligned on an arbitrary byte boundary within a data segment. Note that more efficient system operation may be obtained when multi-byte data structures are aligned on double-byte boundaries (if the memory system is organized in units of double bytes).

Requirements of an iAPX 432 Memory System

The multiprocessor architecture of the iAPX 432 places certain requirements on the operation of the memory system to ensure the integrity of data items that can potentially be accessed simultaneously. Indivisible read-modify-write (RMW) operations to both double-byte and word operands in memory are necessary for manipulating system objects. When an RMW-read is processed for a location in memory, any other RMW-reads from that location must be held off by the memory system until an RMW-write to that location is received (or until an RMW timeout occurs). Note that while the memory system is awaiting the RMW-write, any other types of reads and writes are allowed. Also, for ordinary reads and writes of double-byte or longer operands, the memory system must ensure the entire operand

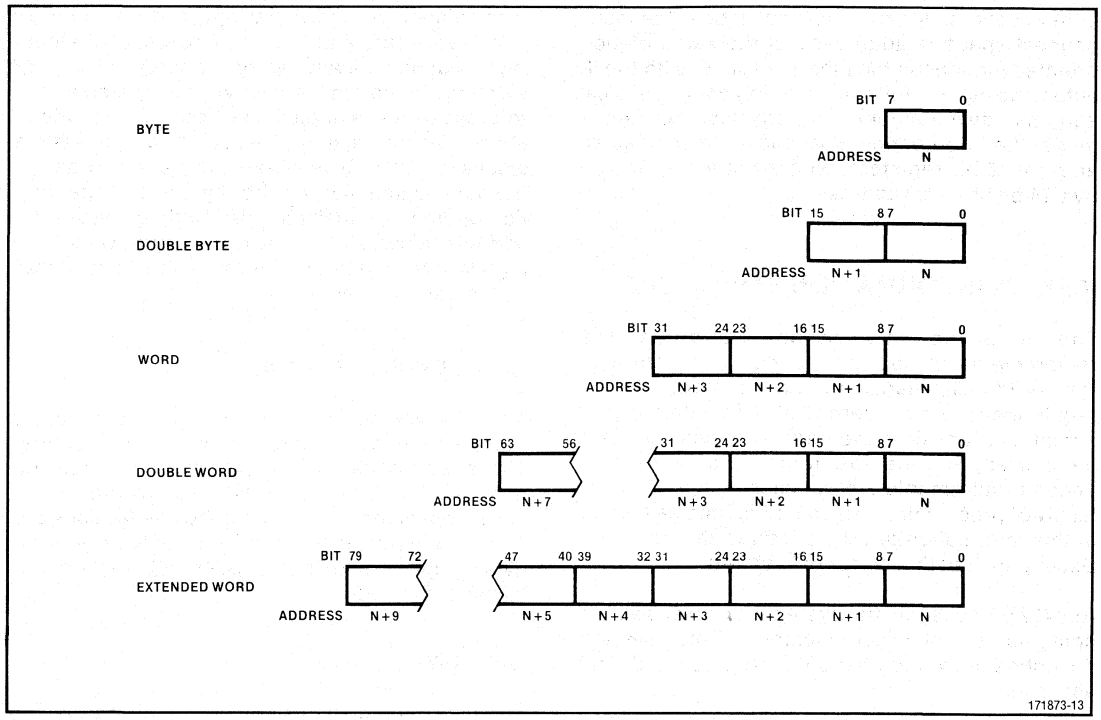

Figure 9. Basic iAPX 432 Data Lengths

has been either read or written before beginning to process another access to the same location; e.g., if two simultaneous writes to the same location occur, the memory system must ensure that the set of locations used to store the operand does not get changed to some interleaved combination of the two written values.

iAPX 432 HARDWARE ERROR DETECTION

iAPX 432 processors include a facility to support the hardware detection of errors by functional redundancy checking (FRC). At initialization time, each iAPX 432 processor is configured to operate as either a master or a checker processor (Figure 10). A master operates in the normal manner. A checker places all output pins that are being checked into a high-impedance state. Thus, those pins which are to be checked on a master and checker are parallel-connected, pin for pin, such that the checker is able to compare its master's output pin values with its own. Any comparison error causes the checker to assert HERR.

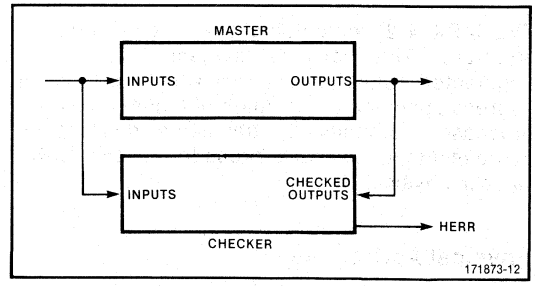

Figure 10. Hardware Error Detection

PROCESSOR PACKET BUS DEFINITION

This section describes and defines the significance of the 19 signal lines that make up the Processor Packet bus, and the general scheme by which timing relationships on these lines are derived. Although this section defines all legal bus activities, the processors do not necessarily perform all allowed activities. Slaves to the Processor Packet bus must support all state transitions to ensure compatibility.

The Processor Packet bus consists of 3 control lines:

- Processor Packet bus Request (PRQ),
- Enable Buffers for Output (BOUT),
- Interconnect Status (ICS).

This bus also includes sixteen 3-state Address-Control-Data lines (ACD15 through ACD0). PRQ has two functions whose use depends upon the application; i.e., PRQ either indicates the first cycle of a transaction on the Processor Packet bus or the cancellation of a transaction initiated in the previous cycle. Of the three control lines, BOUT has the simplest function, serving as a direction control for buffers in large systems requiring more electrical drive than the processor components can provide. The ICS signal has significance pertaining to one of three different system conditions and depends on the state of the Processor Packet bus transaction. The processor interprets the ICS input as an indication of one of the following:

- Whether or not an interprocessor communication (IPC) is waiting,
- Whether or not the slave requires more time to service the processor's request,
- Whether or not a bus ERROR has occurred.

The Address/Control/Data lines emit output specification information to indicate the type of cycle being initiated, e.g., addresses, data to be written, or control information. They also receive data returned to the processor during reads. Details of the ACD line operation and the associated control lines are summarized below.

ACD15-ACD0 (Address/Control/Data)

As shown in Figure 11, the first cycle, (T1 or Tvo) of a Processor Packet bus transaction (indicated by the rising edge of PRQ), the high-order 8 ACD bits (ACD15...ACD8) specify the type of the current transaction. In this first cycle, the low-order ACD bits (ACD7...ACD0) contain the least-significant eight bits of the 24-bit physical address.

During the subsequent cycle (T2), the remainder of the address is present on the ACD pins (aligned such that the most significant byte of the address is on ACD15 through ACD8, the mid-significant byte on ACD7 through ACD0). If PRQ is asserted during T2, the access is cancelled and the ACD lines are not defined.

During the third cycle (T3 or Tw) of a Processor Packet bus transaction the processor presents a high impedance to the ACD lines for read transactions and asserts write data for write transactions.

Once the bus has entered T3 or Tv, the sequence of state transactions depends on the type of cycle requested during the preceding T1 or Tvo. Accesses ranging in length from 1 to 32 bytes may be requested (see Table 1). If a transfer of more than one double byte has been requested, it is necessary to enter T3 for every double-byte that is transferred. The processor may simply enter T3 or it may first enter Tw for any number of cycles (as dictated by ICS).

After all data is transferred, the processor enters either Tv or Tvo. Tvo can be entered only when the internal state of execution is such that the processor is prepared to accomplish an immediate write transfer (overlapped access). During Tvo, the ACD lines contain address and specification information aligned in the same fashion as in T1. If the processor does not require an overlapped access, the bus state moves to Tv (the ACD lines will be high impedance). After Tv, a new bus cycle can be started with T1, or the processor may enter the idle state(Ti).

ICS (Interconnect Status)

ICS has three possible interpretations depending on the state of the bus transaction (see Table 2). Notice that under most conditions ICS has IPC significance for more than one cycle. It is important to note that a valid low during any cycle with IPC significance will signal the processor that an IPC or reconfiguration request has been received. An iAPX 432 processor is required to record and service only one IPC or reconfiguration request at a time. Logic in the interconnect system must record and sequence multiple (possibly simultaneous) IPC occurrences and reconfiguration requests to the processor. Thus the logic that forms ICS must accomodate global and local IPC arrivals and requests for reconfiguration as individual events:

1. Assert IPC significance on ICS for the arrival of an IPC or reconfiguration request.

2. When the iAPX 432 processor reads interconnect address register 2, it will respond to one of the status bits for the IPC or reconfiguration request signalled on ICS in the following order:

   Bit 2 (1=reconfigure, 0=do not reconfigure)

   Bit 1 (1=global IPC arrived, 0=no global IPC)

   Bit 0 (1=local IPC arrived, 0=no local IPC)

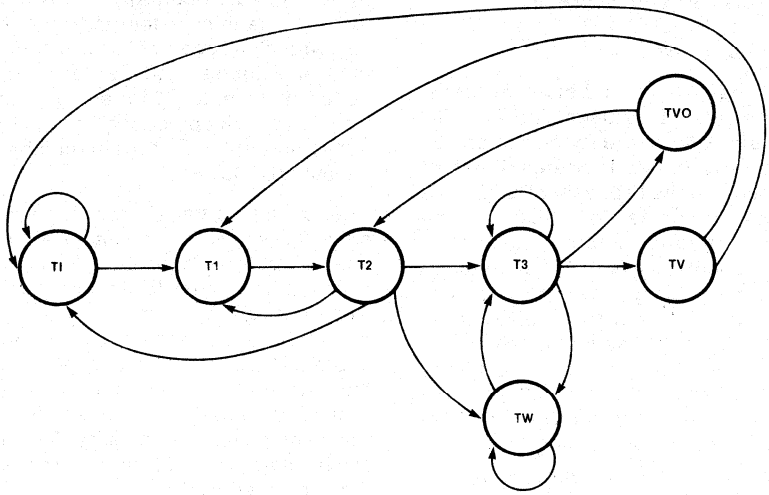

171873-14

Initial State	Next State	Trigger
Ti	TI Ti	Bus cycle desired No bus cycle desired
TI	T2	Unconditional
T2	T3 Tw TI Ti	ICS high ICS low Cancelled, Access Pending Cancelled, No Access Pending
T3	T3 Tw Tv Tvo	Additional transfer required, ICS high Additional transfer required, ICS low All transfers completed, no overlapped access Current write with overlapped access
Tv	Ti TI	No access pending Access pending
Tvo	T2	Unconditional
Tw	Tw T3	ICS low ICS high

Figure 11. Processor Packet Bus State Diagram

Table 1. ACD Specification Encoding

ACD 15	ACD 14	ACD 13	ACD 12 ACD 11 ACD 10	ACD 9 ACD 8
Access	**Op**	**RMW**	**Length**	**Modifiers**
0 - Memory 1 - Other	0 - Read 1 - Write	0 - Nominal 1 - RMW	000 - 1 Byte 001 - 2 Bytes 010 - 4 Bytes 011 - 6 Bytes 100 - 8 Bytes 101 - 10 Bytes 110 - 16 Bytes* 111 - 32 Bytes* * Not implemented	ACD 15 = 0: 00-Inst Seg Access 01-Stack Seg Access 10-Context Ctl Seg Access 11-Other ACD 15 = 1: 00-Reserved 01-Reserved 10-Reserved 11-Interconn Register

3. The logic in the interconnect system must clear the highest order status bit that was serviced by the iAPX 432 processor, and if additional IPC information has arrived, the interconnect system logic must signal an additional IPC indication to the iAPX 432 processor.

   The interconnect system must signal the second IPC by raising ICS high for at least one cycle and then setting ICS low for at least one cycle during IPC significance time.

Table 2. ICS Interpretation

	Level		State
	High	Low	
IPC	None	Waiting	Ti, T1, T2*
Stretch	Don't	Stretch	T3, Tw
Err	Bus Error	No Error	Tv, Tvo

* ICS has no significance in a cycle following a T2 where PRQ is asserted (cancelled access) or in any cycle during which CLR/ is asserted.

PRQ (Processor Packet Bus Request)

PRQ is normally low and can go high only during T1, T2 and Tvo. High levels during Tvo and T1 indicate the first cycle of an access. A high level during T2 indicates that the current cycle is to be cancelled. See Table 3.

Table 3. PRQ Interpretation

State	PRQ	Condition
Ti	0	Always
T1	1	Initiate access
T2	0	Continue access
	1	Cancel access
T3	0	Always
Tw	0	Always
Tv	0	Always
Tvo	1	Initiate overlapped access

BOUT (Enable Buffers for Output)

BOUT is provided to control external buffers when they are present. Table 4 and Figures 12 through 16 show its state under various conditions.

Processor Packet Bus Timing Relationships

All timing relationships on the processor packet bus are derived from a simple scheme and related to Table 5. Each timing diagram shown in the following pages (Figures 12 through 17) provides a separate table illustrating the various system states during the cycle. This approach to transfer timing was designed to allow maximum time for the transfer to occur and yet guarantee hold time. The solid lines in Figure 18 show the state transitions initiated by the IP.

Any agent connected to the processor packet bus is recognized as either a processor or a slave. Examples of processors are the GDP and the IP. A memory system provides an example of a slave.

In all tranfers between a processor and a slave, the data to be driven are clocked three-quarters of a cycle before they are to be sampled. This allows adequate time for the transfer and ensures sufficient hold time after sampling. The BOUT timing is unique because BOUT is intended as a direction control for external buffers.

Detailed set-up and hold times depend on the processor implementation and can be found in the ac characteristics section.

Table 4. BOUT Interpretation

BOUT	Always High	Low-to-High Transition or Low	High-to-Low Transition or Low	High-to-Low Transition or High
Write	T1, T2, T3, Tw, Tvo	Ti	None	Tv
Read	T1, T2	Ti, Tv	T3, Tw	None

Table 5. iAPX 432 Component Signaling Scheme

	Processor		Slave	
Inputs Sampled	ACD:	↓CLKA	All:	↑CLKB
	Others:	↑CLKA		
Outputs Driven	All (except BOUT):	↓CLKA	ACD:	↓CLKB
			Others:	↑CLKB
	BOUT:	↑CLKA		

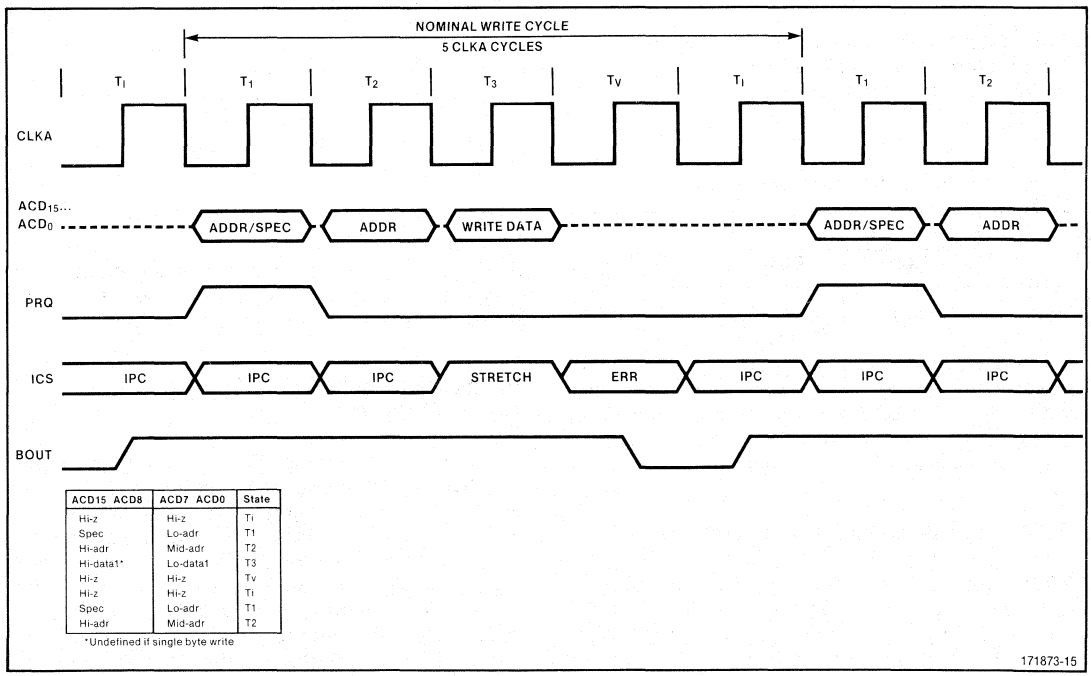

ACD15 ACD8	ACD7 ACD0	State
Hi-z	Hi-z	Ti
Spec	Lo-adr	T1
Hi-adr	Mid-adr	T2
Hi-data1*	Lo-data1	T3
Hi-z	Hi-z	Tv
Hi-z	Hi-z	Ti
Spec	Lo-adr	T1
Hi-adr	Mid-adr	T2

*Undefined if single byte write

Figure 12. Nominal Write Cycle Timing

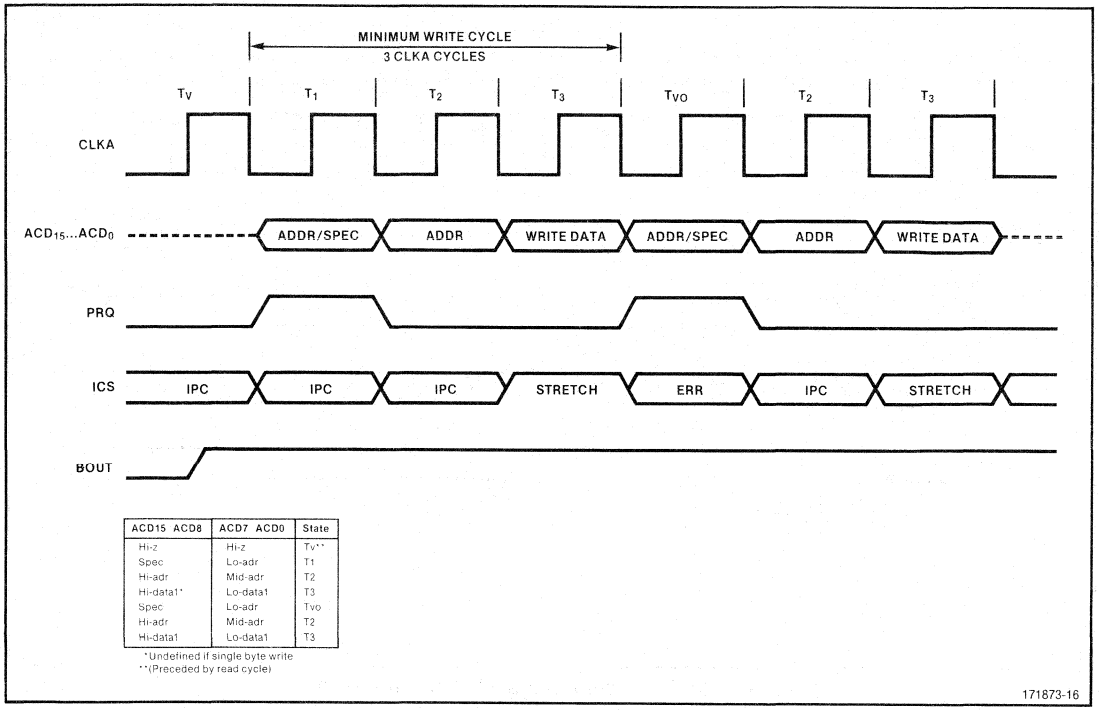

ACD15 ACD8	ACD7 ACD0	State
Hi-z	Hi-z	Tv**
Spec	Lo-adr	T1
Hi-adr	Mid-adr	T2
Hi-data1*	Lo-data1	T3
Spec	Lo-adr	Tvo
Hi-adr	Mid-adr	T2
Hi-data1	Lo-data1	T3

*Undefined if single byte write
**(Preceded by read cycle)

Figure 13. Minimum Write Cycle Timing

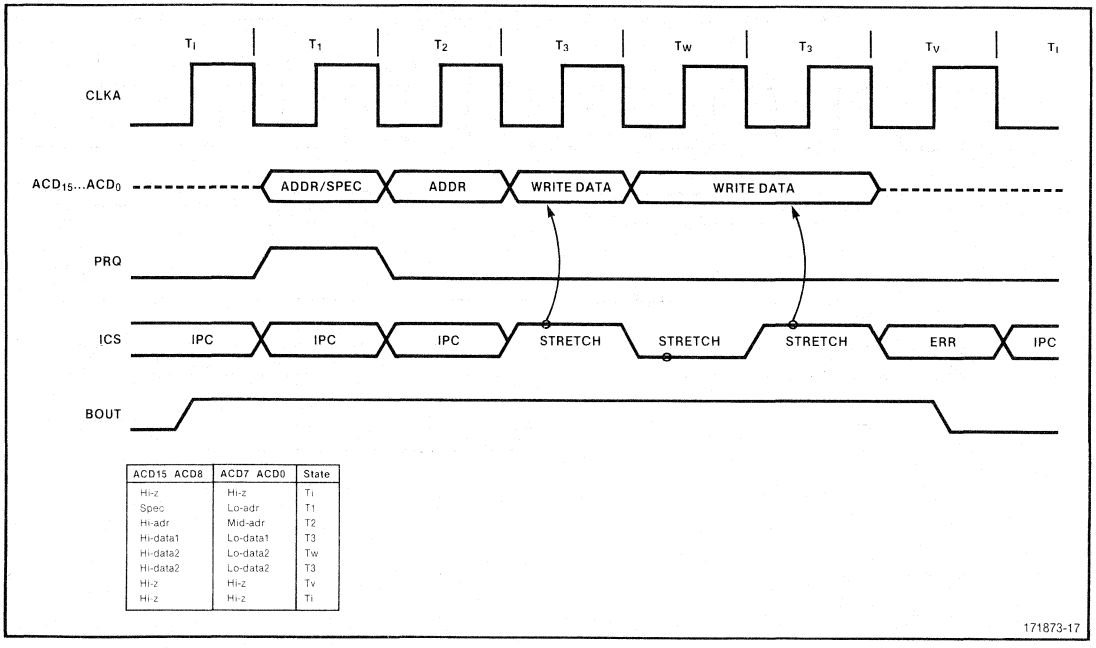

ACD15 ACD8	ACD7 ACD0	State
Hi-z	Hi-z	TI
Spec	Lo-adr	T1
Hi-adr	Mid-adr	T2
Hi-data1	Lo-data1	T3
Hi-data2	Lo-data2	Tw
Hi-data2	Lo-data2	T3
Hi-z	Hi-z	Tv
Hi-z	Hi-z	TI

Figure 14. Stretched Write Cycle Timing

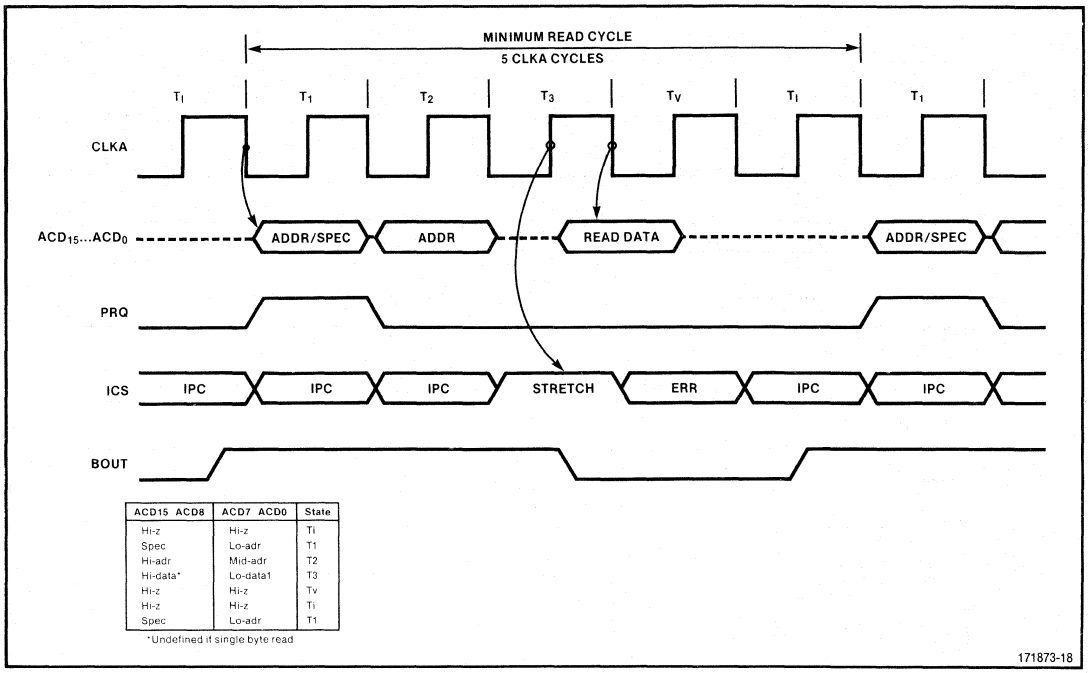

ACD15 ACD8	ACD7 ACD0	State
Hi-z	Hi-z	Ti
Spec	Lo-adr	T1
Hi-adr	Mid-adr	T2
Hi-data*	Lo-data1	T3
Hi-z	Hi-z	Tv
Hi-z	Hi-z	Ti
Spec	Lo-adr	T1

*Undefined if single byte read

Figure 15. Minimum Read Cycle (Not Buffered)

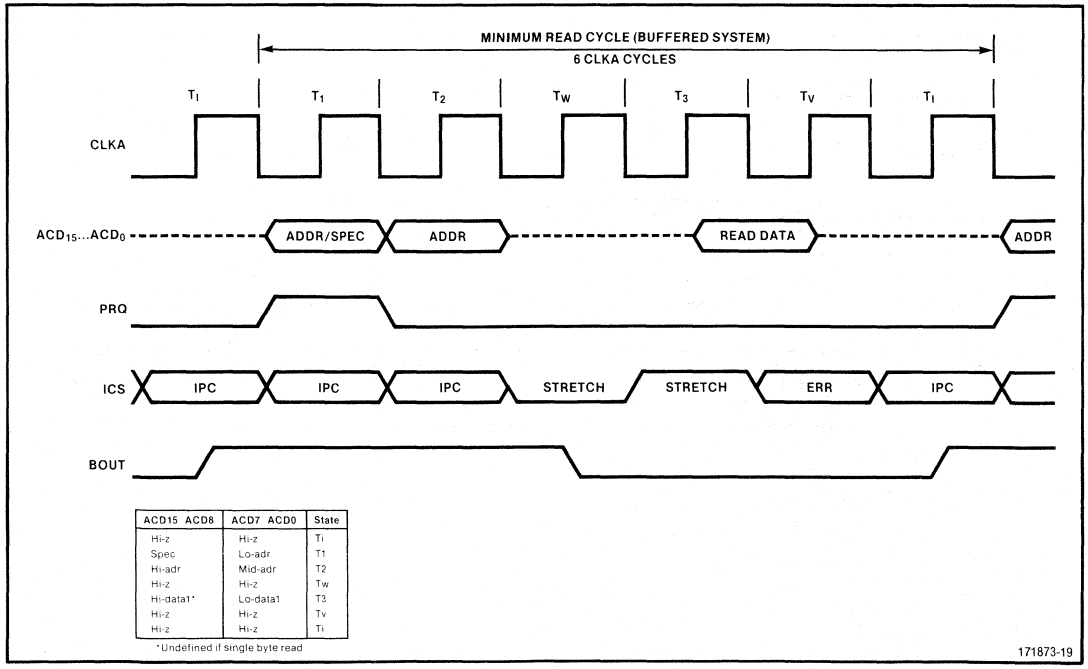

ACD15 ACD8	ACD7 ACD0	State
Hi-z	Hi-z	Ti
Spec	Lo-adr	T1
Hi-adr	Mid-adr	T2
Hi-z	Hi-z	Tw
Hi-data1*	Lo-data1	T3
Hi-z	Hi-z	Tv
Hi-z	Hi-z	Ti

*Undefined if single byte read

Figure 16. Minimum Read Cycle (Buffered System)

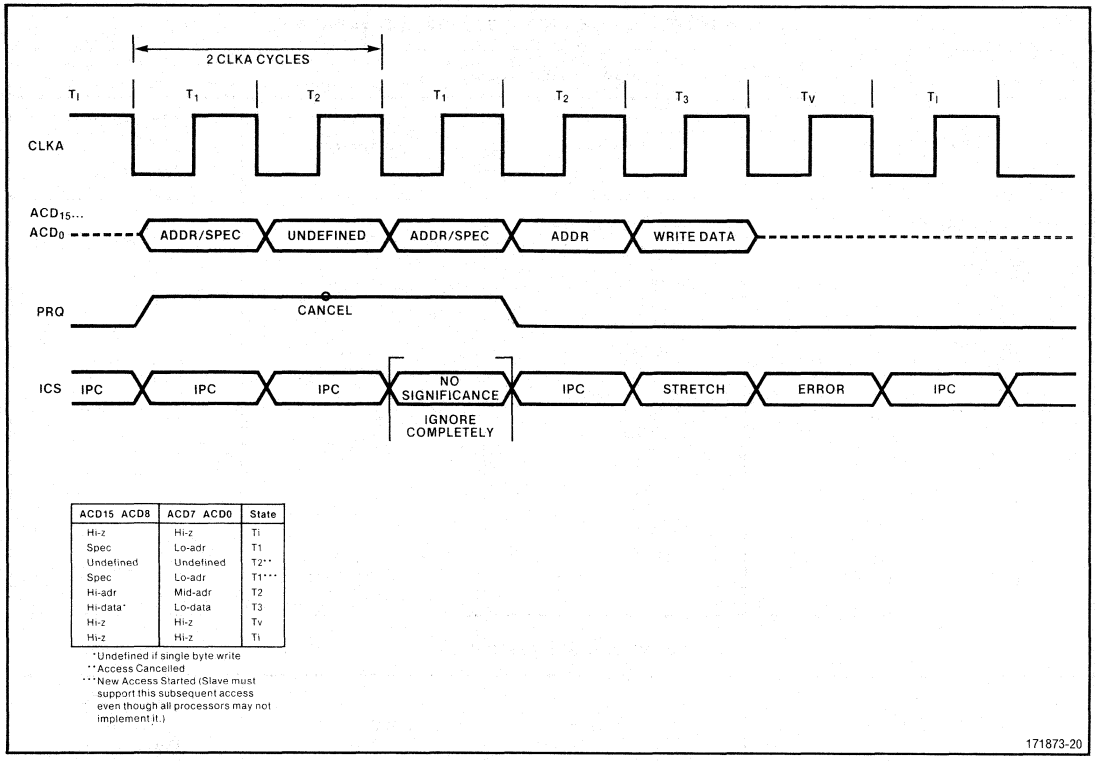

ACD15 ACD8	ACD7 ACD0	State
Hi-z	Hi-z	Ti
Spec	Lo-adr	T1
Undefined	Undefined	T2**
Spec	Lo-adr	T1***
Hi-adr	Mid-adr	T2
Hi-data*	Lo-data	T3
Hi-z	Hi-z	Tv
Hi-z	Hi-z	Ti

*Undefined if single byte write
**Access Cancelled
***New Access Started (Slave must support this subsequent access even though all processors may not implement it.)

Figure 17. Minimum Faulted Access Cycle

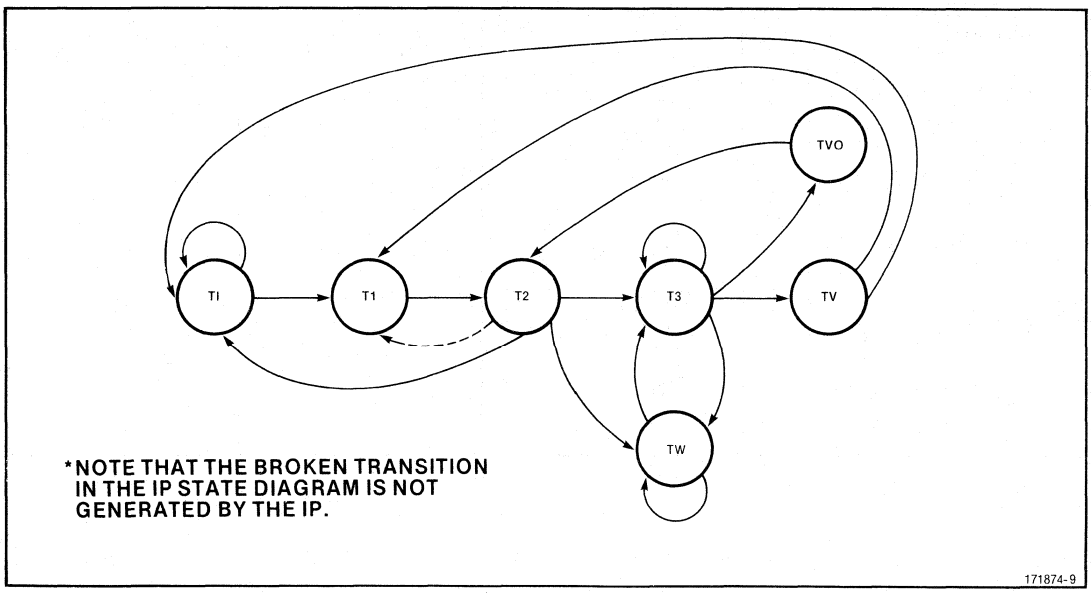

Figure 18. IP State Diagram

Table 6. iAPX 43203 Interface Processor Pin Summary

432 System Side			
Pin Group	**Pin Name**	**Direction**	**Hardware Error Detection**
PROCESSOR PACKET BUS GROUP	ACD15...ACD0	I/O	X
	PRQ	O	X
	ICS	I	
	BOUT	O	
SYSTEM GROUP	ALARM /	I	
	FATAL/	O (I at Initialization)	
	CLR/	I	
	PCLK/	I	
	INIT/	I	
CLOCK GROUP	CLKA	I	
	CLKB	I	
HARDWARE ERROR DETECTION GROUP	HERR	O (I at Initialization)	
Peripheral Subsystem Side			
Pin Group	**Pin Name**	**Direction**	**Hardware Error Detection**
PERIPHERAL SUBSYSTEM BUS GROUP	AD15... AD0	I/O	X
	BHEN/	I	
	CS/	I	
	WR/	I	
PS TIMING GROUP	ALE	I	
	OE	I	
	SYNC	I	
PS BUFFER CONTROL GROUP	DEN/	O	X
PS INTERLOCK GROUP	HLD	O	X
	HDA	I	
PS SYNCHRONIZATION GROUP	XACK/	O	X
	NAK/	O	X
	INH1	O	X
PS INTERRUPT GROUP	INT	O	X
PS RESET GROUP	PSR	O	X

43203 PIN DESCRIPTION

The following section provides detailed information concerning the 43203 pin description. Table 6 lists a summary of all signal groups, signal names and their active states, and whether or not they are monitored by the Hardware Error Detection circuitry.

Processor Packet Bus Group

ACD_{15}—ACD_0 (Address/Control/Data lines, Inputs or Three-state Outputs, high asserted)

The Processor Packet bus Address/Control/Data lines are the basic communication path between the IP and its environment. These pins are used three ways:

- They may indicate control information for bus transactions,
- They may issue physical addresses generated by the IP for an access, or
- They may transfer data (either direction).

When the 43203 is in checker mode, the ACD pins are monitored by the hardware error detection logic and are in the high impedance mode.

PRQ (Processor Packet bus Request, Three-state Output, high asserted)

PRQ is used to indicate the presence of a transaction between the IP and its external environment. Normally low, the PRQ pin is brought high during the same cycle as the first double-byte of address information is being driven onto the ACD pins. PRQ remains high for only one cycle during the access, unless an address development fault occurs. The 43203 will leave PRQ high for a second cycle to indicate the GDP has detected an addressing or segment rights fault in completing address generation. PRQ is checked by the hardware error detection logic. PRQ is in a high impedance state when the 43203 is in checker mode.

ICS (Interconnect Status, Input, high asserted)

ICS is an indication to the 43203 from the bus interface circuitry concerning the status of a bus transaction. The interpretation of the ICS state is dependent upon the present cycle of a bus transaction and may indicate:

- Interprocessor communication (IPC) message waiting,
- Input data invalid,
- Output data not taken,
- Bus error in external environment.

System Group

ALARM/ (Alarm, Input, low asserted)

The ALARM/ input monitors the occurrence of an unusual, system-wide condition such as power failure. ALARM/ is sampled on the rising edge of CLKA.

FATAL/ (Fatal, Output, low asserted) (Master, Input, low asserted)

FATAL/ is asserted by the IP under microcode control when the processor is unable to continue due to various error or fault conditions. Once FATAL/ is asserted, it can only be reset by assertion of INIT/. FATAL/ is not checked by the hardware error detection logic.

When INIT/ is asserted, the FATAL/ pin assumes an input role. Please refer to the INIT/ pin description for a discussion of this function.

Hardware Error Detection Group

HERR (Hardware Error Output, Open Drain Output, high asserted) (Master, Input, low asserted)

HERR is used to signal a discrepancy between a master and a checker (difference between the value internally computed in the checker and that output by the master). The sampling of errors occurs at the most appropriate time for the pin(s) being checked.

HERR is an open drain output which requires an external pullup resistor. Nominally the output is held low. HERR is released upon the detection of discrepancy. The timing of HERR depends on the source of the error. Once HERR is high it will remain high until external logic forces it to go low again. When HERR goes low again, the present HERR error condition is cleared and HERR is immediately capable of detecting and signaling another error.

When INIT/ is asserted, the HERR pin assumes an input role. Please refer to the INIT/ pin description for a discussion of this function.

PCLK/ (Processor Clock, Input, low asserted)

Assertion of PCLK/ for one clock cycle causes the system timer in the IP to decrement. Assertion of PCLK/ for two or more cycles causes the system timer to be reset. PCLK/ must be unasserted for at least 10 clock cycles before being asserted again.

CLR/ (Clear, Input, low asserted)

Assertion of CLR/ results in a microprogram trap which causes the IP to immediately terminate any bus transactions or internal operations which may be in progress at the time, reset to a known state, assert FATAL/, and await an IPC (which resets the IP to the same state as INIT/ assertion does). The IPC will not be serviced for at least four clock cycles following CLR/ assertion.

Response to CLR/ is disabled by the first CLR/ assertion and is reenabled when the IP receives the first IPC (or INIT/ assertion).

CLR/ is sampled by the IP on the rising edge of CLKA.

INIT/ (Initialize, Input, low asserted)

Assertion of INIT/ causes the internal state of the IP to be reset and starts execution of the initialization microcode. INIT/ must be asserted for a minimum of 10 clock cycles. After the INIT/ pin is returned to its nonasserted state, IP microcode will initialize all of the internal registers and windows and will wait for a local IPC.

During INIT/ assertion, the FATAL/ and HERR pins are sampled by the IP to establish the mode in which the two bus interfaces of the IP are to participate in hardware error detection. Table 7 specifies the encoding of the master/checker modes.

Table 7. Representation of MASTER/CHECKER Modes at Initialization

FATAL/	HERR	iAPX 432 Side	Peripheral Subsystem Side
0	0	MASTER	MASTER
0	1	MASTER	CHECKER
1	0	CHECKER	MASTER
1	1	CHECKER	CHECKER

Clock Group

CLKA, CLKB (Clock A, Clock B, Inputs)

CLKA provides the basic timing reference for the IP. CLKB follows CLKA by one-quarter cycle and is used to assist internal timings.

Peripheral Subsystem Bus Group

AD_{15}—AD_0 (Address/Data, Input/Output)

These pins constitute a multiplexed address and data input/output bus. When the attached processor bus is idle or during the first part of an access, these pins normally view the bus as an address. The address is asynchronously checked to see if it falls within (matches) any one of the five window address ranges. The address is latched on the falling edge of ALE thereby maintaining the state of a match or no match for the remainder of the access cycle. The addresses are then unlatched on the falling edge of OE.

Once SYNC has pulsed high, the AD_{15}—AD_0 pins become data input and output pins. When WR/ is high (read mode), data is now accessed in the IP and the output buffers are enabled onto the AD pins if the OE is asserted. When WR/ is low (write mode), data is sampled by the IP after the rising edge of SYNC during the CLKA high time.

The address is always a 16-bit, unsigned number. Data may be either 8 bits or 16 bits as defined by BHEN/ and AD_0. The 8-bit data may be transferred on either the high (AD_{15}—AD_8) or the low (AD_7—AD_0) byte. When 8-bit data is transferred on the high or low byte, the opposite byte is 3-stated.

Twenty-bit addresses are accommodated by the external decoding of the additional address bits and are incorporated in the external CS/ logic.

During the clock in which write data is sampled, data must be set up before the rising edge of CLKA and must be held until the falling edge of that CLKA. Read data is driven out from a CLKA high and should be sampled on the next rising edge of CLKA.

Hardware error detection sampling is not done synchronously to CLKA. It is sampled by the falling edge of the OE pin. The internal AD pin hardware error detection signal is then clocked and output on the HERR pin. At this point it may still not be synchronous with CLKA and should be externally synchronized.

BHEN/ (Byte High Enable, Input, low asserted)

This pin, together with AD_0, determines whether 8 or 16 bits of data are to be accessed, and if it is 8 bits, whether it is to be accessed on the upper or lower byte position. This pin is latched by the falling edge of ALE and unlatched by the falling edge of OE. BHEN/ and AD_0 decode as shown in Table 8.

Table 8. Bus Data Controls

BHEN/	AD_0	Description
0	0	16-bit access
0	1	8 bits on upper byte, lower byte tristated
1	0	8 bits on lower byte, upper byte tristated
1	1	8 bits on lower byte, upper byte tristated

CS/ (Chip Select, Input, low asserted)

Chip Select specifies that this IP is selected and that a read or write cycle is requested. This pin is latched by the falling edge of ALE and unlatched by the falling edge of OE.

WR/ (Write, Input, low asserted)

This pin specifies whether the access is to be a read or a write. WR/ is asserted high for a read and asserted low for a write. This pin is latched by the falling edge of ALE and unlatched by the falling edge of OE.

PS Timing Group

ALE (Address Latch Enable, Input, Rising- and Falling-Edge-Triggered)

The rising edge of ALE sets a flip-flop which enables Transfer Acknowledge (XACK/) to become active. The falling edge of ALE latches the address on the AD_{15}-AD_0 pins and latches WR/, BHEN/ and CS/. Figure 19 shows two styles of ALE.

OE (Data Output Enable, Input, high asserted)

During a read cycle the OE pin enables read data on to the AD_{15}-AD_0 pins when it is asserted. During a read or write cycle the falling edge of OE signifies the end of the access cycle. Specifically, the falling edge of OE does three things:

1. Resets the XACK/ enable flip-flop, thereby terminating XACK/.
2. Terminates DEN/ (if read cycle).
3. Opens address latches WR/, BHEN/, and CS/.

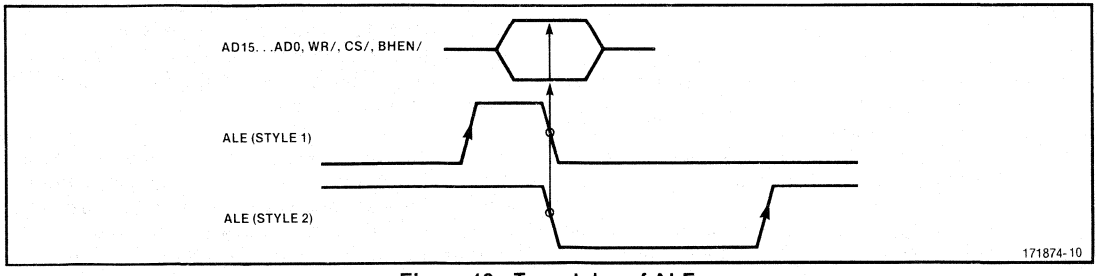

Figure 19. Two styles of ALE

SYNC (Synchronized Qualifier Signal, Input, high asserted)

A rising edge on this signal must be synchronized to the IP CLKA falling edge. This signal qualifies the address, BHEN/, CS/ and WR/, indicating a valid condition. SYNC also initiates any internal action on the IP's part to process an access. It starts the request for data to the IP in a read access. In a write access, data is expected one or two CLKA's after SYNC pulses high. At initialization time, IP microcode sets the write sample delay to the slowest operation (two CLKA's after SYNC). However, this can be modified to one clock cycle by making a function request to the IP to change the write sample delay.

When the hold/hold-acknowledge mechanism of the IP is used, and once HDA has pulsed high, a SYNC pulse is required to qualify the hold acknowledge since the HDA pin can be asynchronous.

PS Buffer Control Group

DEN/ (Data Enable, Output, low asserted)

This pin enables external data buffers which would be used in systems where the address and data are not multiplexed (e.g., a Multibus system). DEN/ assertion begins no sooner than the CLKA high time of the first clock of SYNC assertion if a valid, mappable address range is detected. It is terminated with the falling edge of OE. In a write access, it is also terminated after XACK/ assertion.

Hardware error detection occurs during the first clock of SYNC assertion.

PS Interlock Group

HLD (Hold Request, Output, high asserted)

The hold/hold-acknowledge mechanism is an interlocking mechanism between the peripheral subsystem and the IP. Hold is used by the IP to gain control of the subsystem bus to ensure that no subsystem processors will make an access to the IP while it alters internal registers.

This signal is put out synchronously with the rising edge of CLKA. Hardware error detection sampling occurs during CLKA low time.

In special cases it may not be necessary to use the HLD function interlocking. In this case HDA can be tied high and no SYNC pulse will be required for HDA qualification. The hardware detects this condition by noting that the HDA pin was high a half clock before HLD requests a hold. In this mode the HLD output still functions and can be monitored if desired.

HDA (Hold Acknowledge, Input, high asserted)

HDA is asserted by the peripheral subsystem when the IP's request for a hold has been granted. This pin need only be a high pulse and can be asynchronous to CLKA. This pin must be followed by a SYNC pulse in order to synchronously qualify it.

PS Synchronization Group

XACK/ (Transfer Acknowledge, Output, low asserted)

XACK/ is used to acknowledge that a data transfer has taken place.

For random or local accesses, XACK/ indicates that a transfer to or from iAPX 432 memory has been completed.

For buffered accesses where the XACK-Delay is not in the advanced mode, XACK/ signifies that the transfer from/to the prefetch/postwrite buffer in the IP has been completed.

For buffered accesses which use advanced acknowledge mode (XD=0) the formation of an advanced XACK/ signal is requested. This allows the possibility of interfacing to the peripheral subsystem without wait states. The acknowledge will be advanced if the access is a read operation and the buffer contains the required data or the access is a write operation and the buffer contains sufficient space to accept the write data. In addition, the access must be valid.

If XACK/ is preceded by a low pulse on NAK/, then XACK/ signifies that the access encountered a fault. If the access was a random access, other than window #4, the window will be placed in the faulted state and any further accesses to this window will be ignored by the IP.

If the IP is programmed to be in advanced acknowledge mode (XD=0) and XACK/ is not returned before the peripheral subsystem issued SYNC, then XACK/ will be postponed until valid data has been established on the AD_{15}-AD_0 bus.

Five conditions affecting XACK/ behavior are:

- XACK-Delay, user programmable through an IP function request. This parameter establishes the minimum operating XACK-delay with respect to the SYNC signal. Table 9 displays the representation of the XACK-delay codes.
- XACK-enable-flip-flop, set by the rising edge of the ALE signal and reset by the falling edge of the OE signal.
- Internal IP Registers. These are used to determine validity of the peripheral subsystem access and establish access modes.
- Type of access behavior: Random or Buffered, Memory or Interconnect.
- Bus Faults, nonexistent memory, etc.

Hardware error detection occurs during the first clock of SYNC assertion.

NAK/ (Negative Acknowledge, Output, low asserted)

This signal precedes XACK/ by one-half clock cycle in order to qualify it as a negative acknowledge. This pin pulses low for only one clock period.

When the IP is in physical mode and making an interconnect access, negative acknowledge may be used to indicate that the access was made to a nonexistent interconnect address space. This will allow determination of the system configuration by a subsystem processor at system initialization time.

This pin could be used to set a status bit and cause a special interrupt to transmit the information back to the subsystem.

This signal is synchronously driven from the falling edge of CLKA. Hardware error detection occurs during CLKA high time.

INH1 (Inhibit, Output, high asserted)

This pin is asynchronously asserted by non-clocked logic when a valid mappable address range is detected. It can be used to override other memories in the peripheral subsystem whose address space is overlapped by an IP window. After initialization, the microcode sets the INH1 mode for each window by loading registers in the IP for each window. Once the subsystem is allowed to make a function request, it can selectively disable or enable the inhibit mode on each window. This pin is gated off by CS/.

The selection of the inhibit mode for window 0, when in buffered mode, causes a corresponding built-in XACK-delay which delays the acknowledge from going active until two clock periods after the rising edge of SYNC. This was done to facilitate most Multibus systems using INH1, as they require that the acknowledge be delayed. When the Advanced XACK/ mode is programmed, the inhibit mode should not be used on window 0 when in buffered mode, since the acknowledge will not be effectively delayed.

Hardware error detection occurs during the first clock of SYNC assertion.

Table 9. XACK/ Timing Parameters

Inhibit Mode	WR/	XD_1	XD_0	XACK/ Formation
0	X	0	0	Advanced Acknowledge (XACK/ can occur before SYNC)
0	1	0	1	Rising edge of SYNC
0	0	0	1	Rising edge of SYNC plus 1 Clock
0	1	1	0	Rising edge of SYNC plus 1 Clock
0	0	1	0	Rising edge of SYNC plus 2 Clocks
1	X	1	0	Rising edge of SYNC plus 2 Clocks
1	X	0	1	Rising edge of SYNC plus 2 Clocks
X	X	1	1	Illegal condition

Note: X=don't care condition

PS Interrupt Group

INT (Interrupt, Output, high asserted)

This output is a pulse 2 CLKA's wide, and is synchronously driven from the rising edge of CLKA. Hardware error detection occurs during CLKA low time.

PS Reset Group

PSR (Peripheral Subsystem Reset, Output, high asserted)

PSR is asserted by the IP under microprogram control. When asserted, the peripheral subsystem should be reset. In a debug type of control, it may be desirable to use this pin to set a status bit in an external register or possibly cause a special interrupt. This pin is normally asserted by the IP when the peripheral subsystem is believed to be faulty and would not respond to other means of control.

This signal is put out synchronously with the rising edge of CLKA. Hardware error detection sampling occurs during CLKA low time.

43203 ELECTRICAL CHARACTERISTICS

Tables 10 through 12 and Figures 20 through 25 provide electrical specification information and include input/output timing, read and write timing, and component maximum ratings.

Instruction Set Comparison

Refer to Table 13 for a GDP/IP operator comparison.

Table 10. 43203 Absolute Maximum Ratings

Absolute Maximum Ratings	
Ambient Temperature Under Bias	0° C to 70° C
Storage Temperature	−65° C to +150° C
Voltage on Any Pin with Respect to GND	−1 V to +7 V
Power Dissipation	2.5 Watts

Table 11. iAPX 43203 DC Characteristics

VCC = 5V±10%		Ta = 0°C to 70°C		
Spec	**Description**	**Min**	**Max**	**Units**
Vilc	Clock Input Low Voltage	−0.3	+0.5	V
Vihc*	Clock Input High Voltage	3.5	VCC+0.5	V
Vil	Input Low Voltage	−0.3	0.8	V
Vih	Input High Voltage	2	VCC+0.5	V
Icc	Power Supply Current	–	450	mA
Iil	Input Leakage Current	–	±10	uA
Io	Output Leakage Current	–	±10	uA
Iol	@0.45 Vol			
	HERR	–	8	mA
	FATAL/	–	4	mA
	AD15...AD0	–	4	mA
	OTHER	–	2	mA
Ioh	@2.4 Voh	–	−0.1	mA

* For operation at 5 MHz or slower, the 43203 may be operated with a Vihc minimum of 2.7 volts.

Table 12. iAPX 43203 AC Characteristics

VCC = 5 ± 10% Ta = 0°C to 70°C Loading: AD15...AD0 20 to 100pf
OTHER 20 to 70pf

Symbol	Description	8 MHz.		5MHz.		Unit
		Min	Max	Min	Max	
	GLOBAL TIMING REQUIREMENTS					
tcy	Clock Cycle Time	125	1000	200	1000	nsec.
tr,tf	Clock Rise and Fall Time	–	10	–	10	nsec.
t1,t2						
t3,t4	Clock Pulse Widths	26	250	45	250	nsec.
tis	INIT/ to Signal Hold Time	15	–	20	–	nsec.
tsi	Signal to INIT/ Setup Time	10	–	10	–	nsec.
tie	INIT/ Enable Time	10	–	10	–	tcy
	SYSTEM SIDE TIMING REQUIREMENTS					
tdc	Signal to CLOCK Setup Time	5	–	5	–	nsec.
tcd	Clock to Signal Delay Time	–	55	–	85	nsec.
tdh	Clock to Signal Hold Time	25	–	35	–	nsec.
toh	Clock to Signal Output Hold Time	15	–	20	–	nsec.
ten	Clock to Signal Output Enable Time	15	–	20	–	nsec.
tdf	Clock to Signal Data Float Time	–	55	–	75	nsec.
	PERIPHERAL SUBSYSTEM SIDE TIMING REQUIREMENTS					
tas	AD15...AD0,CS/,WR/,BHEN/ Setup Time to ALE Low	0	–	0	–	nsec.
tah	AD15...AD0,CS/,WR/,BHEN/ Hold Time to ALE Low	32	–	35	–	nsec.
tss	SYNC High Setup Time to CLKA High	50	–	60	–	nsec.
tsh	SYNC Low Hold Time to CLKA High	30	–	40	–	nsec.
tsw	SYNC High Pulse Width	50	tss + 1.5tcy	60	tss + 1.5tcy	nsec.
tds	Write Data Setup to Sampling CLKA High	10	–	20	–	nsec.
tdx*	Write Data Hold to Sampling CLKA Low (Advanced XACK/)	10	–	20	–	nsec.
tdhx	Write Data Hold to XACK/	5	–	5	–	nsec.
tasy	AD15...AD0,CS/,WR/,BHEN/ Setup to SYNC	120	–	160	–	nsec.
	PERIPHERAL SUBSYSTEM TIMING RESPONSES					
tsdh	CLKA High to HLD,INT,PSR	–	75	–	90	nsec.
taih	Valid AD15...AD0,CS/ to Chip INH1 Valid Delay	–	80	–	85	nsec.
tede	OE to DEN/ Delay	–	65	–	70	nsec.
tead	OE to Enable AD15...AD0 Buffers Delay (Read Cycle)	–	70	–	75	nsec.
tdad	OE to Disable AD15...AD0 Buffers Delay (Read Cycle)	–	52	–	52	nsec.
tced	CLKA High to Enable AD15..AD0 Buffers Delay	–	70	–	75	nsec.
tcvd	CLKA High to Valid Read Data Delay	–	80	–	90	nsec.
tox	OE Inactive to XACK/ Inactive Delay	–	80	–	90	nsec.
tdds	AD15...AD0 Disable Setup to DEN/ High	0	–	0	–	nsec.
txde	XACK/ Low to DEN/ High (Write Cycle)	–	35	–	40	nsec.
tcde	CLKA High to DEN/ Low	–	70	–	75	nsec.

Table 12. iAPX 43203 AC Characteristics (Cont'd.)

Symbol	Description	8 MHz. Min	8 MHz. Max	5MHz. Min	5MHz. Max	Unit
	XACK/ TIMING CHARACTERISTICS					
	Buffered Accesses with XD=0					
tax	ALE High to XACK/ Valid	0	65	0	70	nsec.
tdsx	AD15...AD0 Read Data Valid Setup to XACK/ Valid (When internal state does not allow XACK/ before SYNC)	20	–	20	–	nsec.
tadx	Valid AD15...AD0 to XACK/ Valid (When internal state allows XACK/ before SYNC)	–	120	–	140	nsec.
	Buffered Accesses (With XD=1 or XD=2) or Random Accesses					
tdsx	AD15...AD0 Read Data Valid Setup to XACK/	20	–	20	–	nsec.
	Faulted Accesses					
tsdl	CLKA Low to NAK/	–	75	–	90	nsec.
tsnx	Setup of NAK/ to XACK/	50	–	50	–	nsec.

Note: All timing parameters are measured at the 1.5 Volt level except for CLKA and CLKB which are measured at the 1.8 Volt level.

* Write data is sampled for only one clock cycle. The PS must meet the t_{DHX} specification thereby guaranteeing t_{DX}.

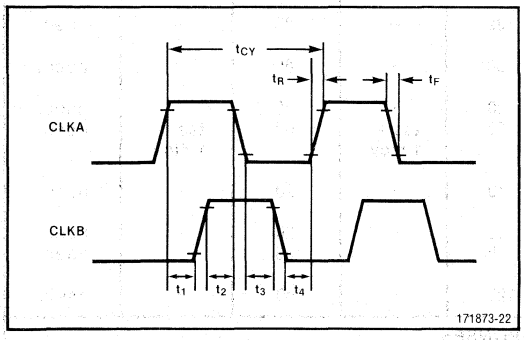

Figure 20. 43203 Clock Input Specification

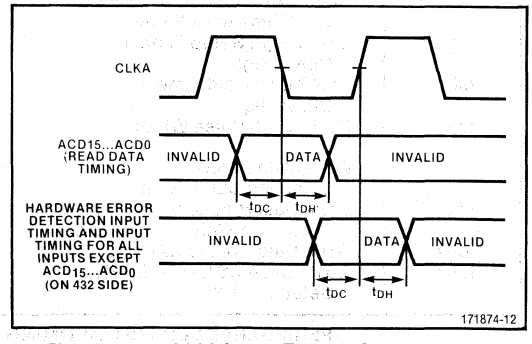

Figure 22. 43203 Input Timing Specification

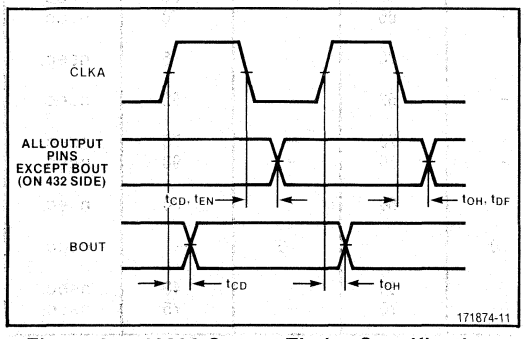

Figure 21. 43203 Output Timing Specification

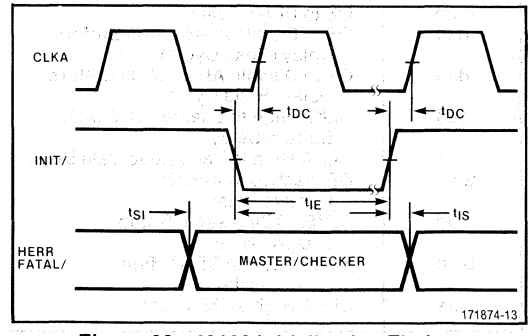

Figure 23. 43203 Initialization Timing

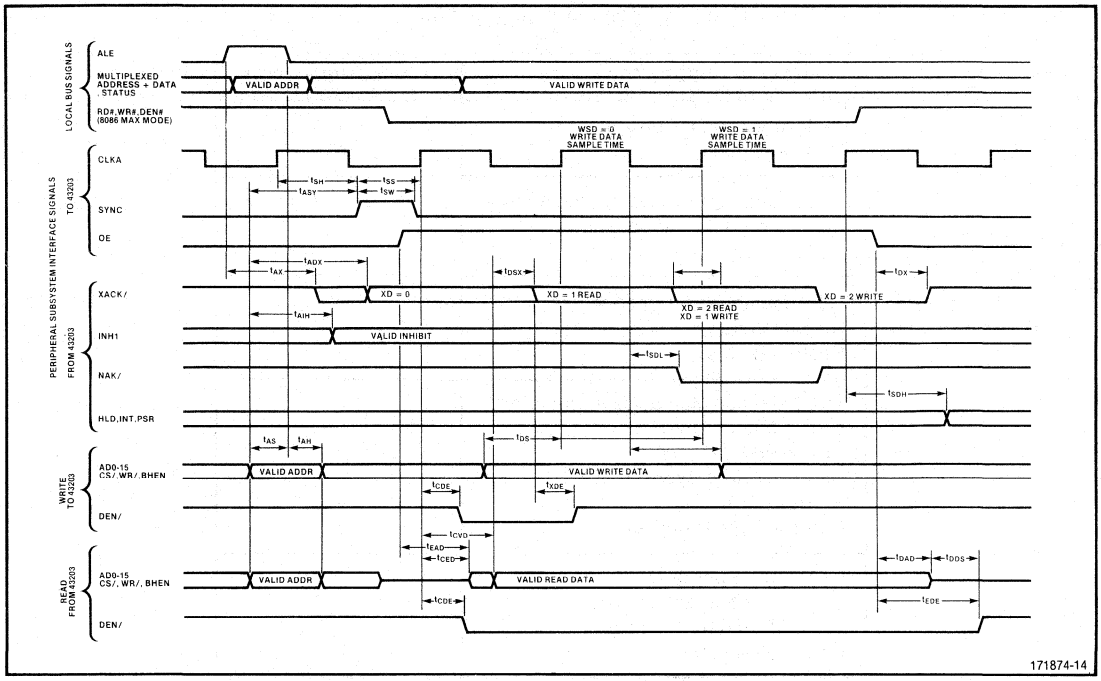

Figure 24. Local Processor Bus Timing

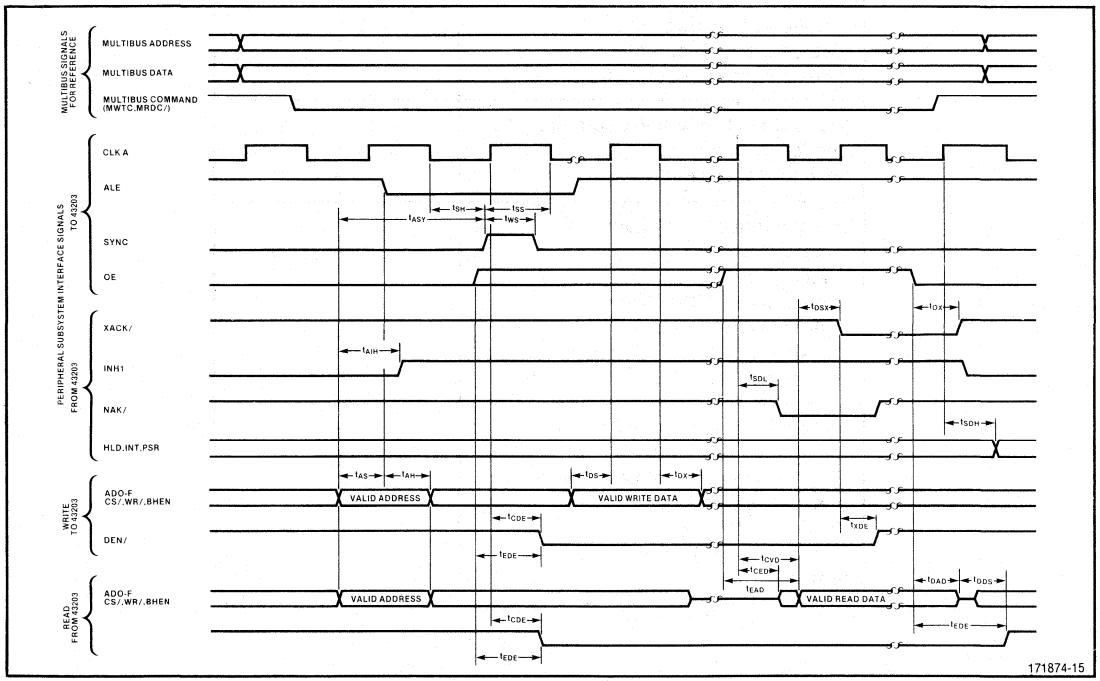

Figure 25. Multibus™ Interface Timing

Table 13. GDP/IP Operator Comparison

OPERATOR	IP IMPLEMENTATION
Window Definition Operator	
Update Window	+
Access Descriptor Movement Operators	
Copy Access Descriptor	=
Null Access Descriptor	=
Rights Manipulation Operators	
Amplify Rights	=
Restrict Rights	=
Type Definition Manipulation Operators	
Create Public Type	–
Create Private Type	–
Retrieve Public Type	=
Retrieve Type	=
Retrieve Type Definition	=
Refinement Operators	
Create Generic Refinement	=
Create Typed Refinement	=
Retrieve Refinement	=
Segment Creation Operators	
Create Data Segment	–
Create Access Segment	–
Create Typed Segment	–
Create Access Descriptor	–
Access Path Inspection Operators	
Inspect Access Descriptor	=
Inspect Access Path	=
Object Interlock Operators	
Lock Object	=
Unlock Object	=
Indivisibly Add Short Ordinal	–
Indivisibly Add Ordinial	–
Indivisibly Insert Short Ordinal	–
Indivisibly Insert Ordinal	–
Context Communication Operators	
Enter Access Segment	=
Enter Process Globals Access Segment	=
Set Context Mode	/
Call	–
Call Context with Message	–
Return	–

Table 13. GDP/IP Operator Comparison (Cont'd.)

OPERATOR	IP IMPLEMENTATION
Process Communication Operators	
Send	=
Receive	=
Conditional Send	=
Conditional Receive	=
Surrogate Send	=
Surrogate Receive	=
Delay	=
Read Process Clock	=
Processor Communication Operators	
Send to Processor	=
Broadcast to Processors	=
Read Processor Status and Clock	=
Move to Interconnect	–
Move from Interconnect	–
Branch Operators	–
Character Operators	–
Short-Ordinal Operators	–
Short-Integer Operators	–
Ordinal Operators	–
Integer Operators	–
Short-Real Operators	–
Real Operators	–
Temporary-Real Operators	–

Legend:
= IP and GDP identical implementation
+ GDP does not implement operator
– IP does not implement operator
/ While conceptually similar, IP implements operator differently than GDP

Industrial Grade Products

11

I2114A
1024 x 4-BIT STATIC RAM

INDUSTRIAL

	I2114AL-3	I2114AL-4	I2114A-4	I2114A-5
Max. Access Time (ns)	150	200	200	250
Max. Current (mA)	50	50	70	70

- **HMOS Technology**
- **Low Power, High Speed**
- **Identical Cycle and Access Times**
- **Single +5V Supply ±10%**
- **High Density 18 Pin Package**
- **Completely Static Memory - No Clock or Timing Strobe Required**
- **Directly TTL Compatible: All Inputs and Outputs**
- **Common Data Input and Output Using Three-State Outputs**
- **Industrial Grade Temperature Range −40°C to +85°C**

The Intel® I2114A is a 4096-bit static Random Access Memory organized as 1024 words by 4 bits using HMOS, a high performance MOS technology. It uses fully DC stable (static) circuitry throughout, in both the array and the decoding, therefore it requires no clocks or refreshing to operate. Data access is particularly simple since address setup times are not required. The data is read out nondestructively and has the same polarity as the input data. Common input/output pins are provided.

The I2114A is designed for memory applications where the high performance and high reliability of HMOS, low cost, large bit storage, and simple interfacing are important design objectives. The I2114A is placed in an 18-pin package for the highest possible density.

It is directly TTL compatible in all respects: inputs, outputs, and a single + 5V supply. A separate Chip Select ($\overline{CS}$) lead allows easy selection of an individual package when outputs are or-tied.

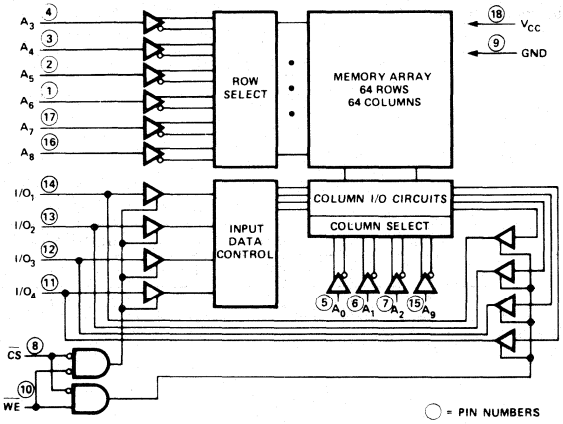

Figure 1. I2114A Block Diagram

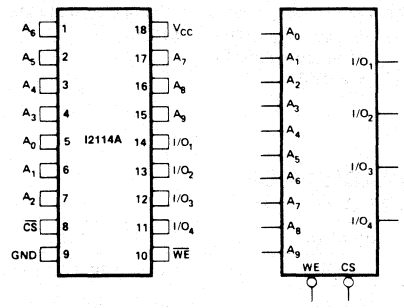

A_0-A_9	ADDRESS INPUTS	V_{CC} POWER (+5V)
$\overline{WE}$	WRITE ENABLE	GND GROUND
$\overline{CS}$	CHIP SELECT	
$I/O_1-I/O_4$	DATA INPUT/OUTPUT	

Figure 2. I2114A Pin Diagram

ABSOLUTE MAXIMUM RATINGS*

Temperature Under Bias ..... – 50°C to + 95°C
Storage Temperature ..... – 65°C to + 150°C
Voltage on any Pin
With Respect to Ground ..... – 3.5V to + 7V
Power Dissipation 1.0W
D.C. Output Current ..... 5 mA

**COMMENT: Stresses above those listed under "Absolute Maximum Ratings" may cause permanent damage to the device. This is a stress rating only and functional operation of the device at these or any other conditions above those indicated in the operational sections of this specification is not implied. Exposure to absolute maximum rating conditions for extended periods may affect device reliability.*

D.C. AND OPERATING CHARACTERISTICS [3]

$T_A = -40°C$ to $+85°C$, $V_{CC} = 5V \pm 10\%$, unless otherwise noted.

Symbol	Parameter	I2114AL-3/L-4 Min.	I2114AL-3/L-4 Typ.(1)	I2114AL-3/L-4 Max.	I2114A-4/-5 Min.	I2114A-4/-5 Typ.(1)	I2114A-4/-5 Max.	Unit	Conditions
I_{LI}	Input Load Current (All Input Pins)			10			10	μA	V_{IN} = 0 to 5.5V
I_{LO}	I/O Leakage Current			10			10	μA	$\overline{CS} = V_{IH}$ $V_{I/O}$ = GND to V_{CC}
I_{CC}	Power Supply Current		25	50		50	70	mA	V_{CC} = max. $I_{I/O}$ = 0 mA, T_A = -40° C
V_{IL}	Input Low Voltage	-3.0		0.8	-3.0		0.8	V	
V_{IH}	Input High Voltage	2.0		6.0	2.0		6.0	V	
I_{OL}	Output Low Current	2.1	9.0		2.1	9.0		mA	V_{OL} = 0.4V
I_{OH}	Output High Current	-1.0	-2.5		-1.0	-2.5		mA	V_{OH} = 2.4V
I_{OS}(2)	Output Short Circuit Current			40			40	mA	V_{OUT} = GND

NOTES:
1. Typical values are for $T_A = 25°C$ and $V_{CC} = 5.0V$.
2. Duration not to exceed 30 seconds.
3. The operating ambient temperature ranges are guaranteed with transverse air flow exceeding 400 linear feet per minute. Typical thermal resistance values of the package at maximum temperature are:
   θ_{JA} (@ 400 f_{PM} air flow) = 40°C/W
   θ_{JA} (still air) = 70°C/W
   θ_{JC} = 25°C/W

CAPACITANCE

$T_A = 25°C$, f = 1.0 MHz

Symbol	Test	Max	Unit	Conditions
$C_{I/O}$	Input/Output Capacitance	5	pF	$V_{I/O} = 0V$
C_{IN}	Input Capacitance	5	pF	$V_{IN} = 0V$

NOTE: This parameter is periodically sampled and not 100% tested.

A.C. CONDITIONS OF TEST

Input Pulse Levels ..... 0.8V to 2.0V
Input Rise and Fall Times ..... 10 ns
Input and Output Timing Levels 1.5V
Output Load ..... 1 TTL Gate and C_L = 100 pF

A.C. CHARACTERISTICS $T_A = -40°C$ to $+85°C$, $V_{CC} = 5V \pm 10\%$, unless otherwise noted.

READ CYCLE [1]

Symbol	Parameter	I2114AL-3 Min.	I2114AL-3 Max.	I2114A-4/L-4 Min.	I2114A-4/L-4 Max.	I2114A-5 Min.	I2114A-5 Max.	Unit
t_{RC}	Read Cycle Time	150		200		250		ns
t_A	Access Time		150		200		250	ns
t_{CO}	Chip Selection to Output Valid		70		70		85	ns
t_{CX}	Chip Selection to Output Active	10		10		10		ns
t_{OTD}	Output 3-state from Deselection		40		50		60	ns
t_{OHA}	Output Hold from Address Change	15		15		15		ns

WRITE CYCLE [2]

Symbol	Parameter	I2114AL-3 Min.	I2114AL-3 Max.	I2114A-4/L-4 Min.	I2114A-4/L-4 Max.	I2114A-5 Min.	I2114A-5 Max.	Unit
t_{WC}	Write Cycle Time	150		200		250		ns
t_W	Write Time	90		120		135		ns
t_{WR}	Write Release Time	0		0		0		ns
t_{OTW}	Output 3-state from Write		40		50		60	ns
t_{DW}	Data to Write Time Overlap	90		120		135		ns
t_{DH}	Data Hold from Write Time	0		0		0		ns

NOTES:
1. A Read occurs during the overlap of a low $\overline{CS}$ and a high $\overline{WE}$.
2. A Write occurs during the overlap of a low $\overline{CS}$ and a low $\overline{WE}$. t_W is measured from the latter of $\overline{CS}$ or $\overline{WE}$ going low to the earlier of $\overline{CS}$ or $\overline{WE}$ going high.

READ CYCLE ③

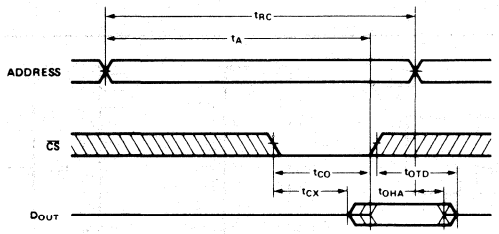

WRITE CYCLE

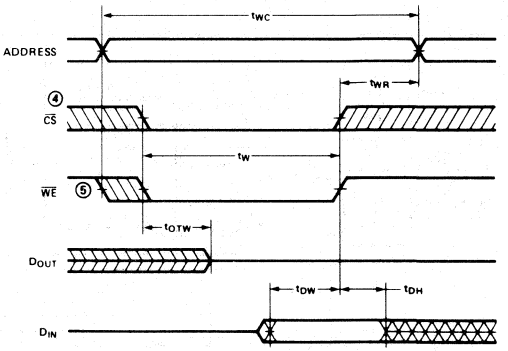

NOTES:
3. $\overline{WE}$ is high for a Read Cycle.
4. If the $\overline{CS}$ low transition occurs simultaneously with the $\overline{WE}$ low transition, the output buffers remain in a high impedance state.
5. $\overline{WE}$ must be high during all address transitions.

I2118 FAMILY
16,384 x 1-BIT DYNAMIC RAM

INDUSTRIAL

	I2118-12	I2118-15
Maximum Access Time (ns)	**120**	**150**
Read, Write Cycle (ns)	**270**	**320**
Read-Modify Cycle (ns)	**320**	**410**

- **Single +5V Supply, ±10% Tolerance**
- **HMOS Technology**
- **Low Power: 138 mW Max. Operating**
  11 mW Max. Standby
- **Low V_{DD} Current Transients**
- **All Inputs, Including Clocks, TTL Compatible**
- **$\overline{CAS}$ Controlled Output is Three-State, TTL Compatible**
- **$\overline{RAS}$-Only Refresh**
- **128 Refresh Cycles Required Every 2 ms**
- **Allows Negative Overshoot**
  V_{IL} min = −2V
- **Industrial Grade Temperature Range**
  −40°C to +85°C

The Intel® I2118 is a 16,384 word by 1-bit Dynamic MOS RAM designed to operate from a single +5V power supply. The I2118 is fabricated using HMOS—a production proven process for high performance, high reliability, and high storage density.

The I2118 uses a single transistor dynamic storage cell and advanced dynamic circuitry to achieve high speed with low power dissipation. The circuit design minimizes the current transients typical of dynamic RAM operation. These low current transients contribute to the high noise immunity of the I2118 in a system environment.

Multiplexing the 14 address bits into 7 address input pins allows the I2118 to be packaged in the industry standard 16-pin DIP. The two 7-bit address words are latched into the I2118 by the two TTL clocks, Row Address Strobe ($\overline{RAS}$) and Column Address Strobe ($\overline{CAS}$). Non-critical timing requirements for $\overline{RAS}$ and $\overline{CAS}$ allow use of the address multiplexing technique while maintaining high performance.

The I2118 three-state output is controlled by $\overline{CAS}$, independent of $\overline{RAS}$. After a valid read or read-modify-write cycle, data is latched on the output by holding $\overline{CAS}$ low. The data out pin is returned to the high impedance state by returning $\overline{CAS}$ to a high state.

The single transistor storage cell requires refreshing for data retention. Refreshing is accomplished by performing $\overline{RAS}$-only refresh cycles, or normal read or write cycles on the 128 address combinations of A_0 through A_6 during a 2 ms period. A write cycle will refresh stored data on all bits of the selected row except the bit which is addressed.

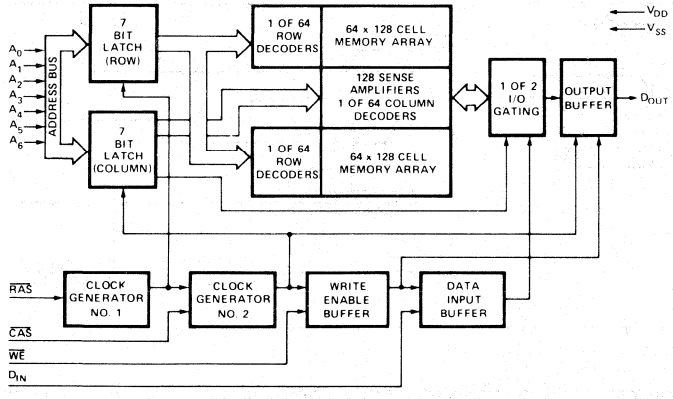

Figure 1. Block Diagram

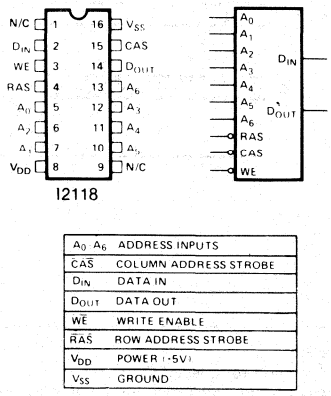

A_0-A_6	ADDRESS INPUTS
$\overline{CAS}$	COLUMN ADDRESS STROBE
D_{IN}	DATA IN
D_{OUT}	DATA OUT
$\overline{WE}$	WRITE ENABLE
$\overline{RAS}$	ROW ADDRESS STROBE
V_{DD}	POWER (+5V)
V_{SS}	GROUND

Figure 2. Pin Diagram

ABSOLUTE MAXIMUM RATINGS*

Ambient Temperature Under Bias .... −50°C to +95°C
Storage Temperature ..... −65°C to +150°C
Voltage on any Pin Relative to V_{SS} 7.5V
Data Out Current 50mA
Power Dissipation 1.0W

*COMMENT:
Stresses above those listed under "Absolute Maximum Rating" may cause permanent damage to the device. This is a stress rating only and functional operation of the device at these or at any other condition above those indicated in the operational sections of this specification is not implied. Exposure to absolute maximum rating conditions for extended periods may affect device reliability.

D.C. AND OPERATING CHARACTERISTICS [1,4]

T_A = −40°C to +85°C, V_{DD} = 5V ±10%, V_{SS} = 0V, unless otherwise noted.

Symbol	Parameter	Limits Min.	Typ.[2]	Max.	Unit	Test Conditions	Notes
$\|I_{LI}\|$	Input Load Current (any input)		0.1	10	µA	V_{IN}=V_{SS} to V_{DD}	
$\|I_{LO}\|$	Output Leakage Current for High Impedance State		0.1	10	µA	Chip Deselected: $\overline{CAS}$ at V_{IH}, V_{OUT} = 0 to 5.5V	
I_{DD1}	V_{DD} Supply Current, Standby		1.2	2	mA	$\overline{CAS}$ and $\overline{RAS}$ at V_{IH}	
I_{DD2}	V_{DD} Supply Current, Operating		21	25	mA	I2118-4, t_{RC} = $t_{RC\ MIN}$	3
			19	23	mA	I2118-7, t_{RC} = $t_{RC\ MIN}$	3
I_{DD3}	V_{DD} Supply Current, $\overline{RAS}$-Only Cycle		14	16	mA	I2118-4, t_{RC} = $t_{RC\ MIN}$	3
			12	14	mA	I2118-7, t_{RC} = $t_{RC\ MIN}$	3
I_{DD5}	V_{DD} Supply Current, Standby, Output Enabled		2	4	mA	$\overline{CAS}$ at V_{IL}, $\overline{RAS}$ at V_{IH}	3
V_{IL}	Input Low Voltage (all inputs)	-2.0		0.8	V		
V_{IH}	Input High Voltage (all inputs)	2.4		7.0	V		
V_{OL}	Output Low Voltage			0.4	V	I_{OL} = 4.2mA	
V_{OH}	Output High Voltage	2.4			V	I_{OH} = -5mA	

NOTES:
1. All voltages referenced to V_{SS}.
2. Typical values are for T_A = 25°C and nominal supply voltages.
3. I_{DD} is dependent on output loading when the device output is selected. Specified $I_{DD\ MAX}$ is measured with the output open.
4. The operating ambient temperature ranges are guaranteed with transverse air flow exceeding 400 linear feet per minute. Typical thermal resistance values of the package at maximum temperature are:
   θ_{JA} (@ 400 f_{PM} air flow) = 45°C/W
   θ_{JA} (still air) = 60°C/W
   θ_{JC} = 25°C/W

CAPACITANCE [1]

T_A = 25°C, V_{DD} = 5V ±10%, V_{SS} = 0V, unless otherwise noted.

Symbol	Parameter	Typ.	Max.	Unit
C_{I1}	Address, Data In	3	5	pF
C_{I2}	$\overline{RAS}$, $\overline{CAS}$, $\overline{WE}$, Data Out	4	7	pF

NOTES:
1. Capacitance measured with Boonton Meter or effective capacitance calculated from the equation:
   $C = \frac{I\Delta t}{\Delta V}$ with ΔV equal to 3 volts and power supplies at nominal levels.

A.C. CHARACTERISTICS [1,2,3]

$T_A = -40°C$ to $+85°C$, $V_{DD} = 5V \pm 10\%$, $V_{SS} = 0V$, unless otherwise noted.

READ, WRITE, READ-MODIFY-WRITE AND REFRESH CYCLES

Symbol	Parameter	I2118-12 Min.	I2118-12 Max.	I2118-15 Min.	I2118-15 Max.	Unit	Notes
t_{RAC}	Access Time From $\overline{RAS}$		120		150	ns	4,5
t_{CAC}	Access Time From $\overline{CAS}$		65		80	ns	4,5,6
t_{REF}	Time Between Refresh		2		2	ms	
t_{RP}	$\overline{RAS}$ Precharge Time	120		135		ns	
t_{CPN}	$\overline{CAS}$ Precharge Time(non-page cycles)	55		70		ns	
t_{CRP}	$\overline{CAS}$ to $\overline{RAS}$ Precharge Time	0		0		ns	
t_{RCD}	$\overline{RAS}$ to $\overline{CAS}$ Delay Time	25	55	25	70	ns	7
t_{RSH}	$\overline{RAS}$ Hold Time	85		105		ns	
t_{CSH}	$\overline{CAS}$ Hold Time	120		165		ns	
t_{ASR}	Row Address Set-Up Time	0		0		ns	
t_{RAH}	Row Address Hold Time	15		15		ns	
t_{ASC}	Column Address Set-Up Time	0		0		ns	
t_{CAH}	Column Address Hold Time	15		20		ns	
t_{AR}	Column Address Hold Time, to $\overline{RAS}$	70		90		ns	
t_T	Transition Time (Rise and Fall)	3	50	3	50	ns	8
t_{OFF}	Output Buffer Turn Off Delay	0	50	0	60	ns	

READ AND REFRESH CYCLES

t_{RC}	Random Read Cycle Time	270		320		ns	
t_{RAS}	$\overline{RAS}$ Pulse Width	140	10000	175	10000	ns	
t_{CAS}	$\overline{CAS}$ Pulse Width	65	10000	95	10000	ns	
t_{RCS}	Read Command Set-Up Time	0		0		ns	
t_{RCH}	Read Command Hold Time	0		0		ns	

WRITE CYCLE

t_{RC}	Random Write Cycle Time	270		320		ns	
t_{RAS}	$\overline{RAS}$ Pulse Width	140	10000	175	10000	ns	
t_{CAS}	$\overline{CAS}$ Pulse Width	65	10000	95	10000	ns	
t_{WCS}	Write Command Set-Up Time	0		0		ns	9
t_{WCH}	Write Command Hold Time	30		45		ns	
t_{WCR}	Write Command Hold Time, to $\overline{RAS}$	85		115		ns	
t_{WP}	Write Command Pulse Width	30		50		ns	
t_{RWL}	Write Command to $\overline{RAS}$ Lead Time	65		110		ns	
t_{CWL}	Write Command to $\overline{CAS}$ Lead Time	50		100		ns	
t_{DS}	Data-In Set-Up Time	0		0		ns	
t_{DH}	Data-In Hold Time	30		45		ns	
t_{DHR}	Data-In Hold Time, to $\overline{RAS}$	85		115		ns	

READ-MODIFY-WRITE CYCLE

t_{RWC}	Read-Modify-Write Cycle Time	320		410		ns	
t_{RRW}	RMW Cycle $\overline{RAS}$ Pulse Width	190	10000	265	10000	ns	
t_{CRW}	RMW Cycle $\overline{CAS}$ Pulse Width	120	10000	185	10000	ns	
t_{RWD}	$\overline{RAS}$ to $\overline{WE}$ Delay	120		150		ns	9
t_{CWD}	$\overline{CAS}$ to $\overline{WE}$ Delay	65		80		ns	9

NOTES:
1. All voltages referenced to V_{SS}.
2. Eight cycles are required after power up or prolonged periods (greater than 2ms) of $\overline{RAS}$ inactivity before proper device operation is achieved. Any 8 cycles which perform refresh are adequate for this purpose.
3. A.C. Characteristics assume $t_T = 5ns$.
4. Assume that $t_{RCD} \leq t_{RCD}(max)$. If t_{RCD} is greater than t_{RCD} (max.) then t_{RAC} will increase by the amount that t_{RCD} exceeds t_{RCD} (max.).
5. Load = 2 TTL loads and 100pF
6. Assumes $t_{RCD} \geq t_{RCD}$ (max.).
7. t_{RCD}(max.) is specified as a reference point only. If t_{RCD} is less than t_{RCD} (max.) access time is t_{RAC}. If t_{RCD} is greater than t_{RCD} (max.) access time is $t_{RCD} + t_{CAC}$.
8. t_T is measured between V_{IH} (min.) and V_{IL} (max.).
9. t_{WCS}, t_{CWD} and t_{RWD} are specified as reference points only. If $t_{WCS} \geq t_{WCS}$ (min.) the cycle is an early write cycle and the data out pin will remain high impedance throughout the entire cycle. If $t_{CWD} \geq t_{CWD}$ (min.) and $t_{RWD} \geq t_{RWD}$ (min.), the cycle is a read-modify-write cycle and the data out will contain the data read from the selected address. If neither of the above conditions is satisfied, the condition of the data out is indeterminate.

WAVEFORMS

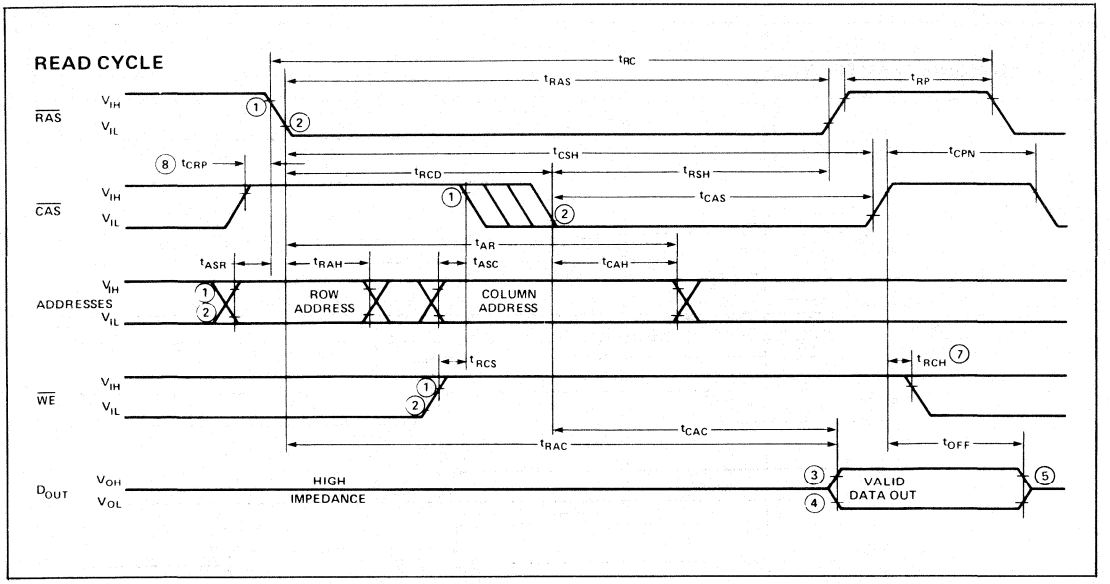

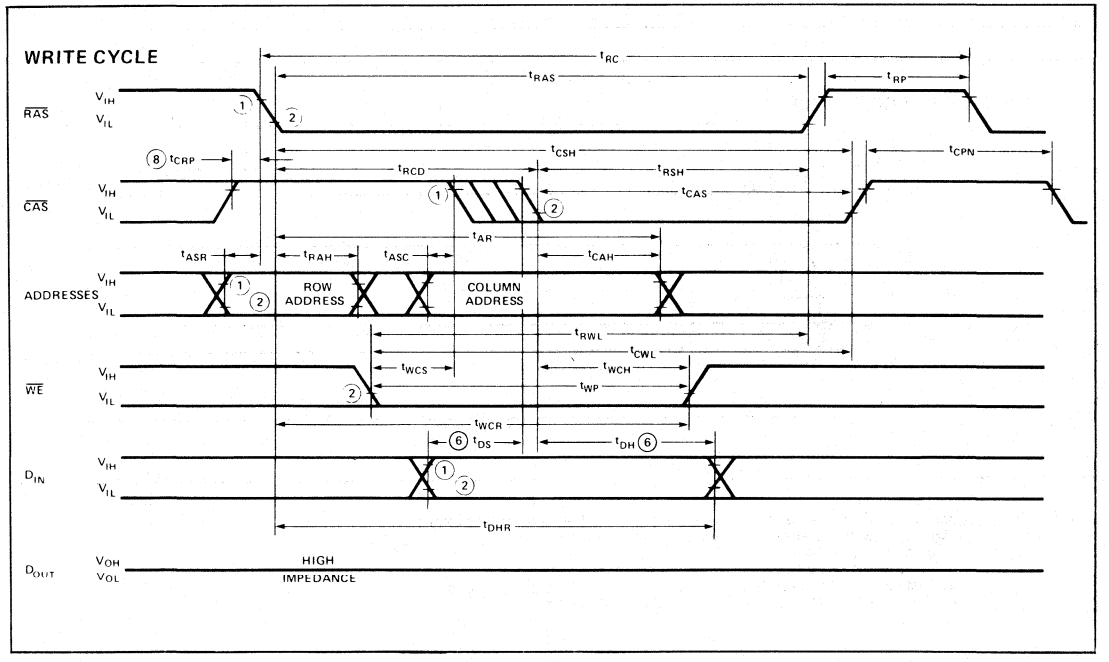

NOTES:
1,2. $V_{IH\ MIN}$ AND $V_{IL\ MAX}$ ARE REFERENCE LEVELS FOR MEASURING TIMING OF INPUT SIGNALS.
3,4. $V_{OH\ MIN}$ AND $V_{OL\ MAX}$ ARE REFERENCE LEVELS FOR MEASURING TIMING OF D_{OUT}.
5. t_{OFF} IS MEASURED TO $I_{OUT} \leq |I_{LO}|$.
6. t_{DS} AND t_{DH} ARE REFERENCED TO $\overline{CAS}$ OR $\overline{WE}$, WHICHEVER OCCURS LAST.
7. t_{RCH} IS REFERENCED TO THE TRAILING EDGE OF $\overline{CAS}$ OR $\overline{RAS}$, WHICHEVER OCCURS FIRST.
8. t_{CRP} REQUIREMENT IS ONLY APPLICABLE FOR $\overline{RAS}$/$\overline{CAS}$ CYCLES PRECEEDED BY A $\overline{CAS}$-ONLY CYCLE (i.e., FOR SYSTEMS WHERE $\overline{CAS}$ HAS NOT BEEN DECODED WITH $\overline{RAS}$).

WAVEFORMS

READ-MODIFY-WRITE CYCLE

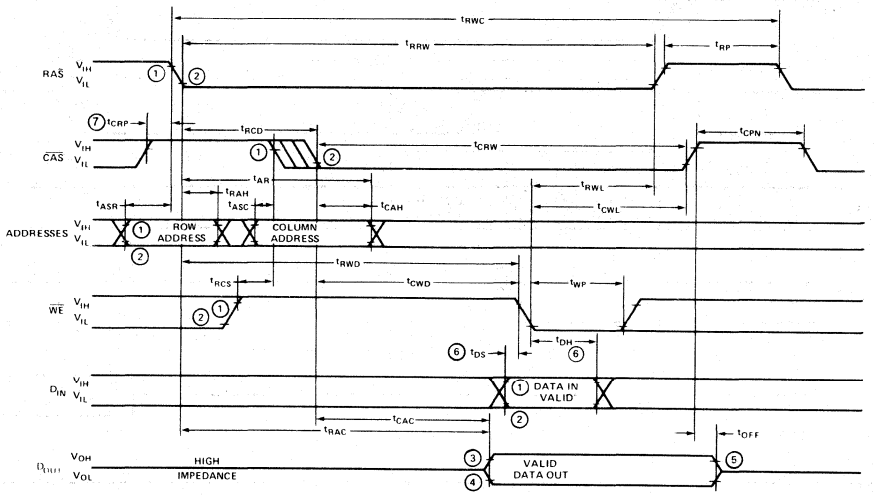

RAS-ONLY REFRESH CYCLE

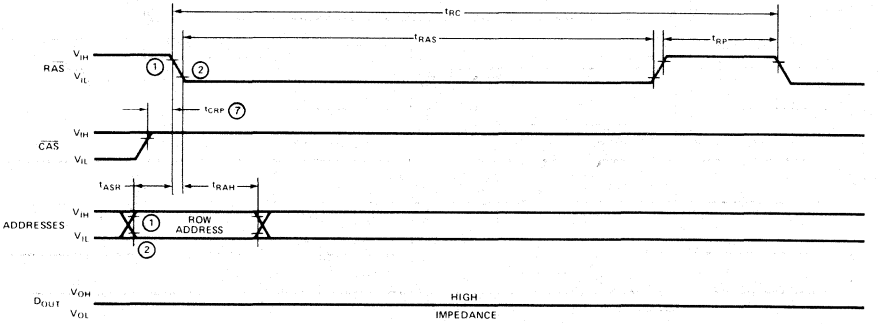

NOTES: 1,2. $V_{IH\ MIN}$ AND $V_{IL\ MAX}$ ARE REFERENCE LEVELS FOR MEASURING TIMING OF INPUT SIGNALS.
3,4. $V_{OH\ MIN}$ AND $V_{OL\ MAX}$ ARE REFERENCE LEVELS FOR MEASURING TIMING OF D_{OUT}.
5. t_{OFF} IS MEASURED TO $|I_{OUT}| \leq |I_{LO}|$.
6. t_{DS} AND t_{DH} ARE REFERENCED TO $\overline{CAS}$ OR $\overline{WE}$, WHICHEVER OCCURS LAST.
7. t_{CRP} REQUIREMENT IS ONLY APPLICABLE FOR $\overline{RAS}/\overline{CAS}$ CYCLES PRECEEDED BY A $\overline{CAS}$-ONLY CYCLE (i.e., FOR SYSTEMS WHERE $\overline{CAS}$ HAS NOT BEEN DECODED WITH $\overline{RAS}$).

I2716
16K (2K x 8) UV ERASABLE PROM
INDUSTRIAL

- **Fast Access Time: 450 ns Max**
- **Industrial Grade Temperature Range: −40°C to +85°C**
- **Single +5V Power Supply**
- **Low Power Dissipation**
  - **525 mW Max. Active Power**
  - **132 mW Max. Standby Power**
- **Simple Programming Requirements**
  - **Single Location Programming**
  - **Programs with One 50 ms Pulse**
- **Inputs and Outputs TTL Compatible during Read and Program**
- **Completely Static**

The Intel® Industrial Grade I2716 is a 16,384-bit ultraviolet erasable and electrically programmable read-only memory (EPROM). The I2716 operates from a single 5-volt power supply, has a static standby mode, and features fast single address location programming. It makes designing with EPROMs faster, easier and more economical.

The I2716, with its single 5-volt supply and with an access time of 450 ns max, is ideal for use with the newer high performance industrial grade +5V microprocessors such as Intel's 8085. The 2716 is also the first EPROM with a static standby mode which reduces the power dissipation without increasing access time. The maximum active power dissipation is 525 mW while the maximum standby power dissipation is only 132 mW, a 75% savings.

The I2716 has the simplest and fastest method yet devised for programming EPROMs—single pulse TTL level programming. No need for high voltage pulsing because all programming controls are handled by TTL signals. Program any location at any time—either individually, sequentially or at random, with the 2716's single address location programming. Total programming time for all 16,384 bits is only 100 seconds.

MODE SELECTION

MODE \ PINS	$\overline{CE}$/PGM (18)	$\overline{OE}$ (20)	V_{PP} (21)	V_{CC} (24)	OUTPUTS (9-11, 13-17)
Read	V_{IL}	V_{IL}	+5	+5	D_{OUT}
Standby	V_{IH}	Don't Care	+5	+5	High Z
Program	Pulsed V_{IL} to V_{IH}	V_{IH}	+25	+5	D_{IN}
Program Verify	V_{IL}	V_{IL}	+25	+5	D_{OUT}
Program Inhibit	V_{IL}	V_{IH}	+25	+5	High Z

BLOCK DIAGRAM

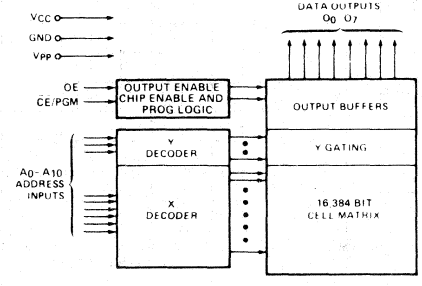

PIN CONFIGURATION

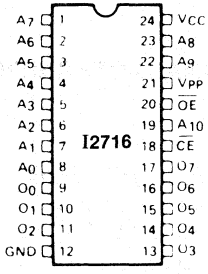

PIN NAMES

$A_0 - A_{10}$	ADDRESSES
$\overline{CE}$/PGM	CHIP ENABLE/PROGRAM
$\overline{OE}$	OUTPUT ENABLE
$O_0 - O_7$	OUTPUTS

PROGRAMMING

The programming specifications are described in the Data Catalog PROM/ROM Programming Instructions Section

ABSOLUTE MAXIMUM RATINGS*

Temperature Under Bias ..... −50°C to +95°C
Storage Temperature ..... − 65°C to + 125°C
All Input or Output Voltages with Respect to Ground ..... + 6V to − 0.3V
V_{PP} Supply Voltage with Respect to Ground During Program ..... + 26.5V to − 0.3V

**NOTICE: Stresses above those listed under "Absolute Maximum Ratings" may cause permanent damage to the device. This is a stress rating only and functional operation of the device at these or any other conditions above those indicated in the operational sections of this specification is not implied. Exposure to absolute maximum rating conditions for extended periods may affect device reliability.*

D.C. CHARACTERISTICS

T_A = −40°C to +85°C, V_{CC}[1,2] = +5V ± 5%, V_{PP}[2] = V_{CC}

READ OPERATION

Symbol	Parameter	Limits			Unit	Conditions
		Min.	Typ[3]	Max.		
I_{LI}	Input Load Current			10	μA	V_{IN} = 5.25V
I_{LO}	Output Leakage Current			10	μA	V_{OUT} = 5.25V
I_{PP1}[2]	V_{PP} Current			5	mA	V_{PP} = 5.25V
I_{CC1}[2]	V_{CC} Current (Standby)		10	25	mA	$\overline{CE} = V_{IH}$, $\overline{OE} = V_{IL}$
I_{CC2}[2]	V_{CC} Current (Active)		57	100	mA	$\overline{OE} = \overline{CE} = V_{IL}$
V_{IL}	Input Low Voltage	− 0.1		0.8	V	
V_{IH}	Input High Voltage	2.0		V_{CC} + 1	V	
V_{OL}	Output Low Voltage			0.45	V	I_{OL} = 2.1 mA
V_{OH}	Output High Voltage	2.4			V	I_{OH} = − 400 μA

NOTES: 1. V_{CC} must be applied simultaneously or before V_{PP} and removed simultaneously or after V_{PP}.

2. V_{PP} may be connected directly to V_{CC} except during programming. The supply current would then be the sum of I_{CC} and I_{PP1}.

3. Typical values are for T_A = 25°C and nominal supply voltages.

4. This parameter is only sampled and is not 100% tested.

TYPICAL CHARACTERISTICS

I_{CC} CURRENT vs. TEMPERATURE

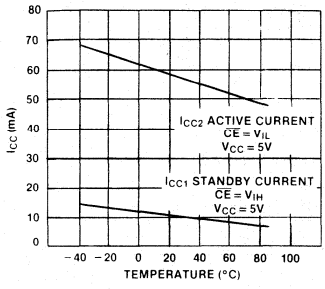

ACCESS TIME vs. CAPACITANCE

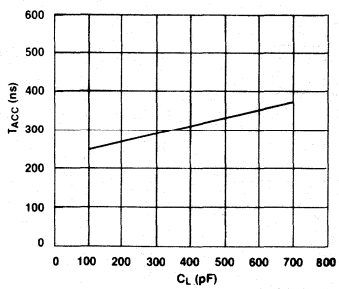

ACCESS TIME vs. TEMPERATURE

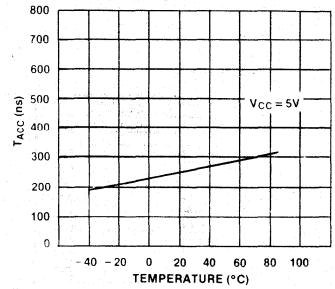

A.C. CHARACTERISTICS

T_A = −40°C to +85°C, V_{CC}[1,2] = +5V ± 5%, V_{PP}[2] = V_{CC}

Symbol	Parameter	Limits			Unit	Test Conditions
		Min.	Typ.	Max.		
t_{ACC}	Address to Output Delay			450	ns	$\overline{CE} = \overline{OE} = V_{IL}$
t_{CE}	$\overline{CE}$ to Output Delay			450	ns	$\overline{OE} = V_{IL}$
t_{OE}	Output Enable to Output Delay			150	ns	$\overline{CE} = V_{IL}$
t_{DF}	Output Enable High to Output Float	0		130	ns	$\overline{CE} = V_{IL}$
t_{OH}	Output Hold From Addresses, $\overline{CE}$ or $\overline{OE}$ Whichever Occurred First	0			ns	$\overline{CE} = \overline{OE} = V_{IL}$

CAPACITANCE[4] T_A = 25°C, f = 1 MHz

Symbol	Parameter	Typ.	Max.	Unit	Conditions
C_{IN}	Input Capacitance	4	6	pF	V_{IN} = 0V
C_{OUT}	Output Capacitance	8	12	pF	V_{OUT} = 0V

A.C. TEST CONDITIONS

Output Load: 1 TTL gate and C_L = 100 pF
Input Rise and Fall Times: ≤20 ns
Input Pulse Levels: 0.8V to 2.2V
Timing Measurement Reference Level:
Inputs 1V and 2V
Outputs 0.8V and 2V

WAVEFORMS

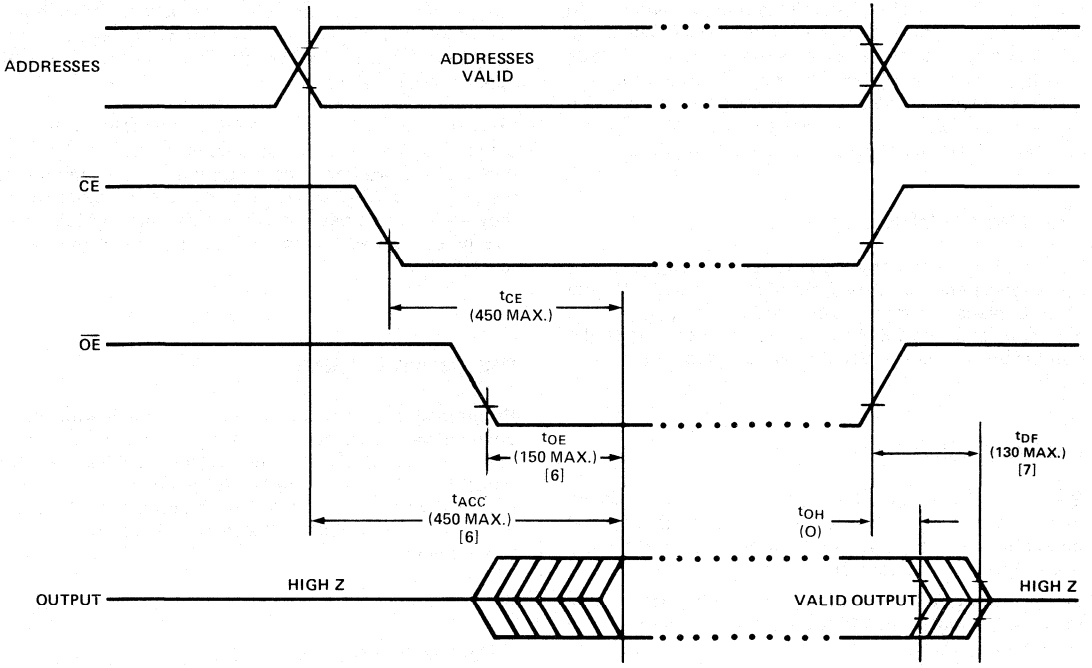

NOTES:
1. V_{CC} must be applied simultaneously or before V_{PP} and removed simultaneously or after V_{PP}.
2. V_{PP} may be connected directly to V_{CC} except during programming. The supply current would then be the sum of I_{CC} and I_{PP1}.
3. Typical values are for T_A = 25°C and nominal supply voltages.
4. This parameter is only sampled and is not 100% tested.
5. All times shown in parentheses are minimum and are nsec unless otherwise specified.
6. $\overline{OE}$ may be delayed up to $t_{ACC} - t_{OE}$ after the falling edge of $\overline{CE}$ without impact on t_{ACC}.
7. t_{DF} is specified from $\overline{OE}$ or $\overline{CE}$, whichever occurs first.

DEVICE OPERATION

The five modes of operation of the 2716 are listed in Table 1. It should be noted that all inputs for the five modes are at TTL levels. The power supplies required are a +5V V_{CC} and a V_{PP}. The V_{PP} power supply must be at 25V during the three programming modes, and must be at 5V in the other two modes.

MODE SELECTION

MODE \ PINS	$\overline{CE}$/PGM (18)	$\overline{OE}$ (20)	V_{PP} (21)	V_{CC} (24)	OUTPUTS (9-11, 13-17)
Read	V_{IL}	V_{IL}	+5	+5	D_{OUT}
Standby	V_{IH}	Don't Care	+5	+5	High Z
Program	Pulsed V_{IL} to V_{IH}	V_{IH}	+25	+5	D_{IN}
Program Verify	V_{IL}	V_{IL}	+25	+5	D_{OUT}
Program Inhibit	V_{IL}	V_{IH}	+25	+5	High Z

READ MODE

The 2716 has two control functions, both of which must be logically satisfied in order to obtain dat at the outputs. Chip Enable ($\overline{CE}$) is the power control and should be used for device selection. Output Enable ($\overline{OE}$) is the output control and should be used to gate data to the output pins, independent of device selection. Assuming that addresses are stable, address access time (t_{ACC}) is equal to the delay from $\overline{CE}$ to output (t_{CE}). Data is available at the outputs 150 ns (t_{OE}) after the falling edge of $\overline{OE}$, assuming that $\overline{CE}$ has been low and addresses have been stable for at least t_{ACC}-t_{OE}.

STANDBY MODE

The 2716 has a standby mode which reduces the active power dissipation by 75%, from 525 mW to 132 mW. The 2716 is placed in the standby mode by applying a TTL high special to the CE input. When in standby mode, the outputs are in a high impedance state, independent of the OE input.

OUTPUT OR-TIEING

Because 2716's are usually used in larger memory arrays, Intel has provided a 2 line control function that accommodates this use of multiple memory connections. The two line control function allows for

a) the lowest possible memory power dissipation, and,
b) complete assurance that output bus contention will not occur.

To most efficiently use these two control lines, it is recommended that $\overline{CE}$ (pin 18) be decoded and used as the primary device selecting function, while $\overline{OE}$ (pin 20) be made a common connection to all devices in the array and connected to the READ line from the system control bus. This assures that all deselected memory devices are in their low power standby mode and that the output pins are only active when data is desired from a particular memory device.

PROGRAMMING

Initially, and after each erasure, all bits of the 2716 are in the "1" state. Data is introduced by selectively programming "0's" into the desired bit locations. Although only "0's" wil be programmed, both "1's" and "0's" can be presented in the data word. The only way to change a "0" to a "1" is by ultraviolet light erasure.

The 2716 is in the programming mode when the V_{PP} power supply is at 25V and $\overline{OE}$ is at V_{IH}. The data to be programmed is applied 8 bits in parallel to the data output pins. The levels required for the address and data inputs are TTL.

When the address and data are stable, a 50 msec, active high, TTL program pulse is applied to the $\overline{CE}$ input. A program pulse must be applied at each address location to be programmed. You can progam any location at any time — either individually, sequentially, or at random. The program pulse has a maximum wit)dth of 55 msec. The 2716 must not be programmed with a DC signal applied to the $\overline{CE}$ input.

Programming of multiple 2716's in parallel with the same data can be easily accomplished due to the simplicity of the programming requirements. Like inputs of the paralleled 2716's may be connected together when they are programmed with the same data. A high level TTL pulse applied to the $\overline{CE}$ input programs the paralleled 2716's.

PROGRAM INHIBIT

Programming of multiple 2716's in parallel with different data is also easily accomplished. Except for $\overline{CE}$, all like units (including $\overline{OE}$) of the parallel 2716's may be common. A TTL level program pulse applied to a 2716's $\overline{CE}$ input with V_{PP} at 25V will program that 2716. A low level $\overline{CE}$ input inhibits the other 2716 from being programmed.

PROGRAM VERIFY

A verify should be performed on the programmed bits to determine that they were correctly programmed. The verify may be performed with V_{PP} at 25V. Except during programming and program verify, V_{PP} must be at 5V.

I8022

PRELIMINARY

SINGLE COMPONENT 8-BIT MICROCOMPUTER WITH ON-CHIP A/D CONVERTER

- 8-Bit CPU, ROM, RAM, I/O in Single 40-Pin Package
- On-Chip 8-Bit A/D Converter; Two Input Channels
- 8 Comparator Inputs (Port 0)
- Zero-Cross Detection Capability
- Single 5V Supply (4.5V to 6.5V)
- High Current Drive Capability—2 Pins
- Two Interrupts—External and Timer
- 2K x 8 ROM, 64 x 8 RAM, 28 I/O Lines
- 10 μsec Cycle; All Instructions 1 or 2 Cycles
- -40° C to 85° C Operation
- Interval Timer/Event Counter
- Instructions—8048 Subset
- Clock Generated with Single Inductor or Crystal
- Easily Expanded I/O

The Intel I8022 is the newest member of the MCS-48® family of single chip 8-bit microcomputers. It is designed to satisfy the requirements of low-cost, high-volume applications which involve analog signals, capacitive touchpanel keyboards, and/or large ROM space. The I8022 addresses these applications by integrating many new functions on-chip, such as A/D conversion, comparator inputs and zero-cross detection.

The features of the I8022 includes 2K bytes of program memory (ROM), 64 bytes of data memory (RAM), 28 I/O lines, an on-chip A/D converter with two input channels, an 8-bit port with comparator inputs for interfacing to low voltage capacitive touchpanels or other non-TTL interfaces, external and timer interrupts, and zero-cross detection capability. In addition, it contains the 8-bit interval timer/event counter, on-board oscillator and clock circuitry, single 5V power supply requirement, and easily expandable I/O structure common to all members of the MCS-48 family.

The I8022 is designed to be an efficient controller as well as an arithmetic processor. It has bit-handling capability plus facilities for both binary and BCD arithmetic. Efficient use of program memory results from using the MCS-48 instruction set which consists mostly of single-byte instructions and has extensive conditional jump and direct table lookup capability. Program memory usage is further reduced via the I8022's hardware implementation of the A/D converter which simplifies interfacing to analog signals.

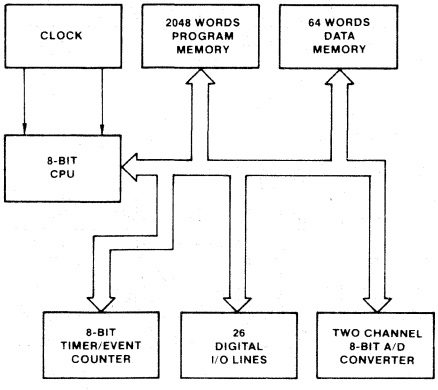

Figure 1. I8022 Block Diagram

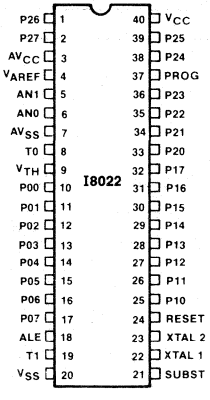

Figure 2. I8022 Pin Configuration

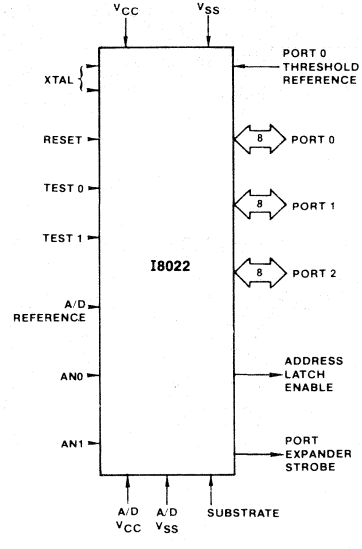

Figure 3. I8022 Logic Symbol

ABSOLUTE MAXIMUM RATINGS*

Ambient Temperature Under Bias ..... -40°C to 85°C

Storage Temperature ..... -65°C to +180°C

Voltage on Any Pin with Respect to Ground ..... -0.5V to +7V

Power Dissipation ..... 1 Watt

**NOTICE: Stresses above those listed under "Absolute Maximum Ratings" may cause permanent damage to the device. This is a stress rating only and functional operation of the device at these or any other conditions above those indicated in the operational sections of this specification is not implied. Exposure to absolute maximum rating conditions for extended periods may affect device reliability.*

D.C. CHARACTERISTICS (TA = -40°C to 85°C; VCC = 5.5V ± 1V; VSS = 0V)

Symbol	Parameter	Limits			Unit	Test Conditions
		Min	Typ	Max		
VIL	Input Low Voltage	-0.5		0.5	V	VTH Floating
VIL1	Input Low Voltage (Port 0)	-0.5		VTH -0.2	V	
VIH	Input High Voltage (All except XTAL 1, RESET)	2.3		VCC	V	VCC = 5.0V ± 10% VTH Floating
VIH1	Input High Voltage (All except XTAL 1, RESET)	3.8		VCC	V	VCC = 5.5V ± 1V VTH Floating
VIH2	Input High Voltage (Port 0)	VTH + 0.2		VCC	V	
VIH3	Input High Voltage (RESET, XTAL 1)	3.8		VCC	V	
VTH	Port 0 Threshold Reference Voltage	0		.4VCC	V	
VOL	Output Low Voltage			0.45	V	IOL = 0.8 mA
VOL1	Output Low Voltage (P10, P11)			2.5	V	IOL = 3 mA
VOH	Output High Voltage (All unless Open Drain Option—Port 0)	2.4			V	IOH = 30 μA
ILI	Input Current (T1)			± 700	μA	VCC ⩾ VIN ⩾ VSS + 0.45V
ILO	Output Leakage Current (Open Drain Option—Port 0)			± 10	μA	VCC ⩾ VIN ⩾ VSS + 0.45 V
ICC	VCC Supply Current	•		120	mA	
ILI	Input Current to Ports			500	μA	VIN = 0.45V

A.C. CHARACTERISTICS (TA = -40°C to 85°C; VCC = 5.5V ± 1V; VSS = 0V)

Symbol	Parameter	Min	Max	Unit	Test Conditions
tCY	Cycle Time	10.0	50.0	μs	3 MHz XTAL = 10 μs tCY
VT1	Zero-Cross Detection Input (T1)	1	3	VACpp	AC Coupled
AZC	Zero-Cross Accuracy		± 200	mV	60 Hz Sine Wave
FT1	Zero-Cross Detection Input Frequency (T1)	0.05	1	kHz	

A.C. CHARACTERISTICS (TA = -40°C to 85°C; VCC = 5.5V ± 1V; VSS = 0V)

Test Conditions: CL = 80 pF; tCY = 8.38 μs

	Symbol	Parameter	Min	Max	Unit	Notes
Expander Operation	tCP	Port Control Setup Before Falling Edge of PROG	0.5		μs	
	tPC	Port Control Hold After Falling Edge of PROG	0.8		μs	
	tPR	PROG to Time P2 Input Must Be Valid		1.0	μs	
	tDP	Output Data Setup Time	7.0		μs	
	tPD	Output Data Hold Time	8.3		μs	
	tPF	Input Data Hold Time	0	150	ns	
	tPP	PROG Pulse Width	8.3		μs	
Normal Operation	tPRL	ALE to Time P2 Input Must Be Valid		3.6	μs	
	tPL	Output Data Setup Time	0.8		μs	
	tLP	Output Data Hold Time	1.6		μs	
	tPFL	Input Data Hold Time	0		μs	
	tLL	ALE Pulse Width	3.9	23.0	μs	tCY = 10.0 μs for min

PORT 2 TIMING

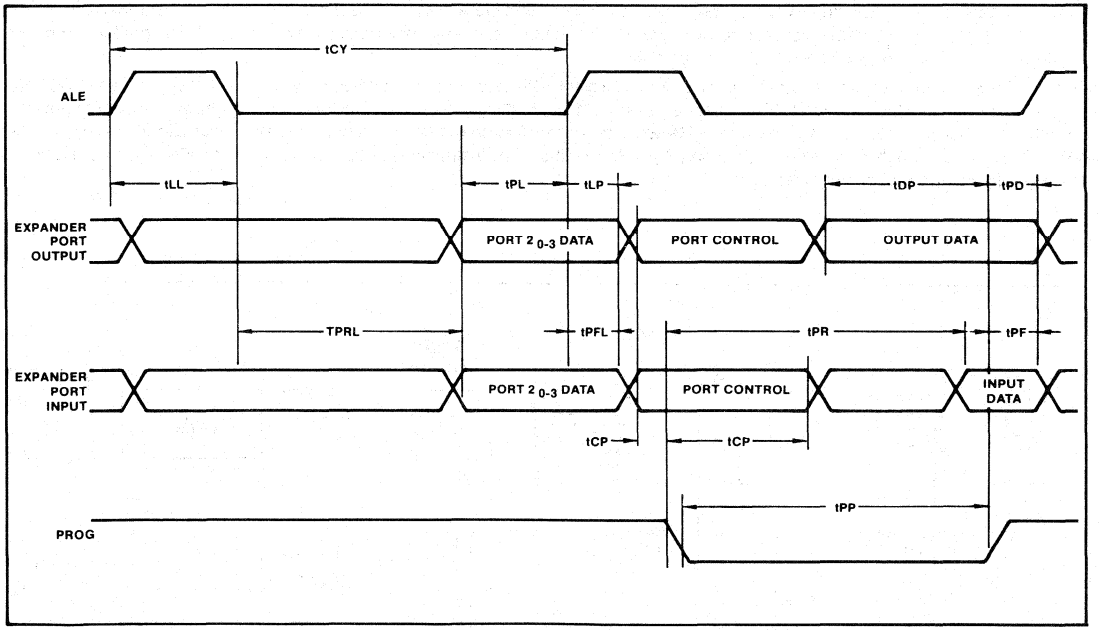

ADVANCE INFORMATION

I8031/8051
SINGLE-COMPONENT 8-BIT MICROCOMPUTER

INDUSTRIAL

- **8031 - Control Oriented CPU With RAM and I/O**
- **8051 - An 8031 With Factory Mask-Programmable ROM**

- **4K x 8 ROM**
- **128 x 8 RAM**
- **Four 8-Bit Ports, 32 I/O Lines**
- **Two 16-Bit Timer/Event Counters**
- **High-Performance Full-Duplex Serial Channel**
- **External Memory Expandable to 128K**
- **Compatible with MCS-80™/MCS-85™ Peripherals**
- **Boolean Processor**
- **MCS-48® Architecture Enhanced with:**
  - **Non-Paged Jumps**
  - **Direct Addressing**
  - **Four 8-Register Banks**
  - **Stack Depth Up to 128-Bytes**
  - **Multiply, Divide, Subtract, Compare**
- **Most Instructions Execute in 1 μs**
- **4 μs Multiply and Divide**

The Intel® 8031/8051 is a stand-alone, high-performance single-chip computer fabricated with Intel's highly-reliable +5 Volt, depletion-load, N-Channel, silicon-gate HMOS technology and packaged in a 40-pin DIP. It provides the hardware features, architectural enhancements and new instructions that are necessary to make it a powerful and cost effective controller for applications requiring up to 64K bytes of program memory and/or up to 64K bytes of data storage.

The 8051 contains a non-volatile 4K x 8 read only program memory; a volatile 128 x 8 read/write data memory, 32 I/O lines; two 16-bit timer/counters; a five-source, two-priority-level, nested interrupt structure; a serial I/O port for either multi-processor communications, I/O expansion, or full duplex UART; and on-chip oscillator and clock circuits. The 8031 is identical, except that it lacks the program memory. For systems that require extra capability, the 8051 can be expanded using standard TTL compatible memories and the byte oriented MCS-80 and MCS-85 peripherals.

The 8051 microcomputer, like its 8048 predecessor, is efficient both as a controller and as an arithmetic processor. The 8051 has extensive facilities for binary and BCD arithmetic and excels in bit-handling capabilities. Efficient use of program memory results from an instruction set consisting of 44% one-byte, 41% two-byte, and 15% three-byte instructions. 58% of the instructions execute in 1 μs, 40% in 2 μs, and multiply and divide require only 4 μs. Among the many instructions added to the standard 8048 instruction set are multiply, divide, subtract and compare.

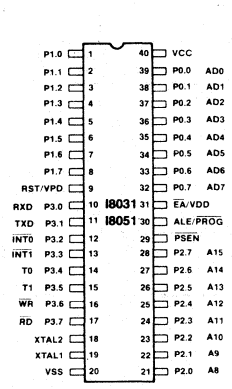

Figure 1. Pin Configuration

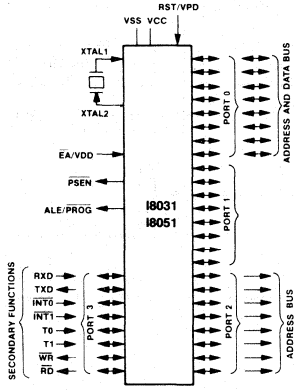

Figure 2. Logic Symbol

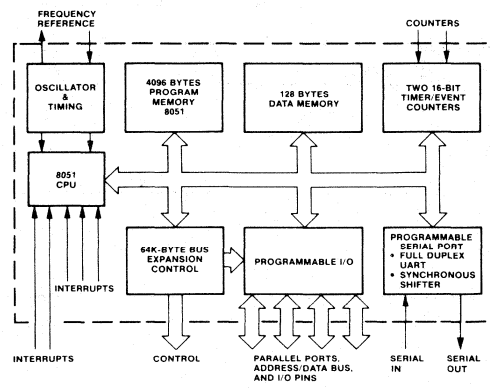

Figure 3. Block Diagram

AFN-01462A-01

FOR ADDITIONAL SPECIFICATIONS, SEE COMMERCIAL DATA SHEET.

I8048H/I8035HL

PRELIMINARY

NEW HIGH PERFORMANCE HMOS SINGLE COMPONENT 8-BIT MICROCOMPUTER

INDUSTRIAL

- **I8048H Mask Programmable ROM**
- **I8035HL External ROM or EPROM**
- **RAM Power Down Mode**
- **Interchangeable with 8748**
- **8 MHz Operation**

- **8-Bit CPU, ROM, RAM, I/O in Single Package**
- **High Performance HMOS**
- **Reduced Power Consumption**
- **1.88 μsec Cycle**
  All instructions 1 or 2 Cycles
- **Over 90 Instructions: 70% Single Byte**
- **-40° C to 85° C Operation**
- **1K x 8 ROM**
  64 x 8 RAM
  27 I/O Lines
- **Interval Timer/Event Counter**
- **Easily Expandable Memory and I/O**
- **Compatible with 8080/8085 Series Peripherals**
- **Two Single Level Interrupts**

The Intel I8048H is a totally self-sufficient, 8-bit parallel computer fabricated on a single silicon chip using Intel's advanced N-channel silicon gate HMOS process.

The I8048H contains a 1K x 8 program memory, a 64 x 8 RAM data memory, 27 I/O lines, and an 8-bit timer/counter in addition to on-board oscillator and clock circuits. For systems that require extra capability the I8048H can be expanded using standard memories and MCS-80®/MCS-85® peripherals. The I8035HL is the equivalent of the I8048H without program memory and can be used with external ROM and RAM.

To reduce development problems to a minimum and provide maximum flexibility, a logically and functionally pin-compatible version of the I8048H with UV-erasable user-programmable EPROM program memory is available. The I8748 will emulate the I8048H up to 6 MHz clock frequency with minor differences.

I8048H is fully compatible with the I8048 when operated at 6 MHz.

These microcomputers are designed to be efficient controllers as well as arithmetic processors. They have extensive bit handling capability as well as facilities for both binary and BCD arithmetic. Efficient use of program memory results from an instruction set consisting mostly of single byte instructions and no instructions over 2 bytes in length.

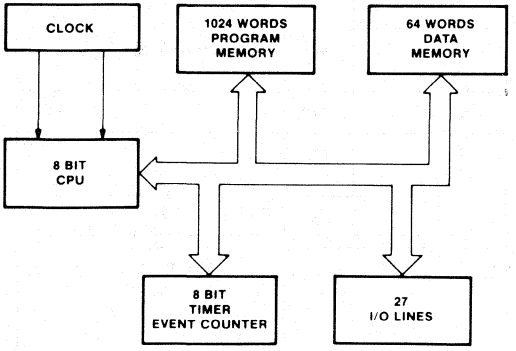

Figure 1. Block Diagram

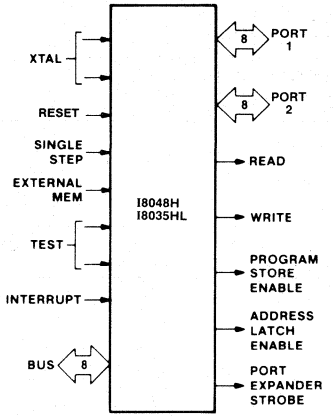

Figure 2. Logic Symbol

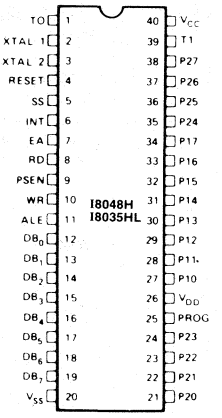

Figure 3. Pin Configuration

The following are trademarks of Intel Corporation and its affiliates and may be used only to identify Intel products: i, Intel, INTEL, INTELLEC, MCS, m, iCS, ICE, UPI, BXP, iSBC, iSBX, Insite, iRMX, System 2000, CREDIT, iRMX/80, MULTIBUS, PROMPT, Promware, Megachassis, Library Manager, MAIN MULTIMODULE, and the combination of MCS, ICE, iSBC, iRMX or iCS and a numerical suffix. © INTEL CORPORATION, 1981.

AFN-02012A
AUGUST 1981

ABSOLUTE MAXIMUM RATINGS*

Ambient Temperature Under Bias ..... -40°C to 85°C
Storage Temperature ..... -65°C to +150°C
Voltage on Any Pin With Respect to Ground ..... -0.5V to +7V
Power Dissipation ..... 1.5 Watt

*NOTICE: Stresses above those listed under "Absolute Maximum Ratings" may cause permanent damage to the device. This is a stress rating only and functional operation of device at these or any other conditions above those indicated in the operational sections of this specification is not implied.

D.C. CHARACTERISTICS (T_A = -40°C to 85°C, V_{CC} = V_{DD} = 5V ± 10%, V_{SS} = 0V)

Symbol	Parameter	Limits			Unit	Test Conditions
		Min	Typ	Max		
V_{IL}	Input Low Voltage (All Except $\overline{RESET}$, X1, X2)	-.5		.8	V	
V_{IL1}	Input Low Voltage ($\overline{RESET}$, X1, X2)	-.5		.6	V	
V_{IH}	Input High Voltage (All Except XTAL1, XTAL2, $\overline{RESET}$)	2.2		V_{CC}	V	
V_{IH1}	Input High Voltage (X1, X2, $\overline{RESET}$)	3.8		V_{CC}	V	
V_{OL}	Output Low Voltage (BUS)			.45	V	I_{OL} = 1.6 mA
V_{OL1}	Output Low Voltage ($\overline{RD}$, $\overline{WR}$, $\overline{PSEN}$, ALE)			.45	V	I_{OL} = 1.2 mA
V_{OL2}	Output Low Voltage (PROG)			.45	V	I_{OL} = 0.8 mA
V_{OL3}	Output Low Voltage (All Other Outputs)			.45	V	I_{OL} = 1.2 mA
VOH	Output High Voltage (BUS)	2.4			V	I_{OH} = -280 μA
V_{OH1}	Output High Voltage ($\overline{RD}$, $\overline{WR}$, $\overline{PSEN}$, ALE)	2.4			V	I_{OH} = -80 μA
V_{OH2}	Output High Voltage (All Other Outputs)	2.4			V	I_{OH} = -30 μA
I_{L1}	Input Leakage Current (T1, $\overline{INT}$)			± 10	μA	$V_{SS} \leq V_{IN} \leq V_{CC}$
I_{LI1}	Input Leakage Current (P10-P17, P20-P27, EA, $\overline{SS}$)			-600	μA	V_{SS} + .45 $\leq V_{IN} \leq V_{CC}$
I_{L0}	Output Leakage Current (BUS, TO) (High Impedance State)			± 10	μA	V_{SS} + .45 $\leq V_{IN} \leq V_{CC}$
I_{DD}	V_{DD} Supply Current		6	12	mA	
I_{DD} + I_{CC}	Total Supply Current		5	95	mA	
V_{DD}	RAM Standby Pin Voltage	3.0			V	Reset ≤ 0.6V

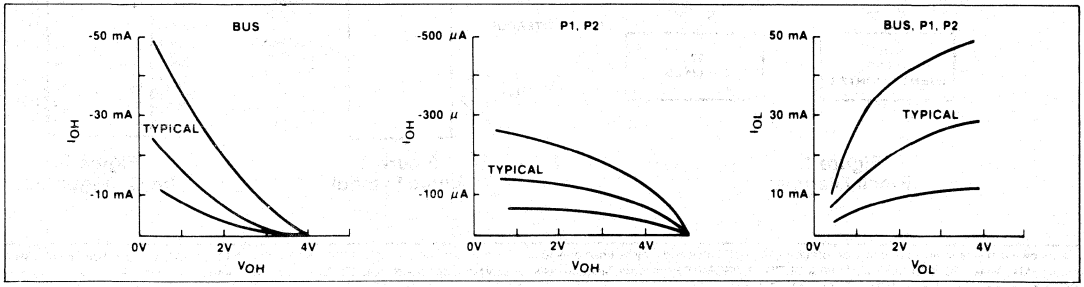

AFN-02012A

A.C. CHARACTERISTICS (T_A = -40°C to 85°C, V_{CC} = V_{DD} = 5V ± 10%, V_{SS} = 0V)

Symbol	Parameter	f (t_{CY}) (Note 3)	8 MHz		Unit	Conditions (Note 1)
			Min	Max		
t_{LL}	ALE Pulse Width	7/30 t_{CY} -170	270		ns	
t_{AL}	Addr Setup to ALE	1/5 t_{CY} -110	270		ns	
t_{LA}	Addr Hold from ALE	1/15 t_{CY} -40	90		ns	
t_{CC1}	Control Pulse Width ($\overline{RD}$, $\overline{WR}$)	1/2 t_{CY} -200	740		ns	
t_{CC2}	Control Pulse Width ($\overline{PSEN}$)	2/5 t_{CY} -200	550		ns	
t_{DW}	Data Setup before $\overline{WR}$	13/30 t_{CY} -200	620		ns	
t_{WD}	Data Hold after $\overline{WR}$	1/15 t_{CY} -50	80		ns	(Note 2)
t_{DR}	Data Hold ($\overline{RD}$, $\overline{PSEN}$)	1/10 t_{CY} -30	0	160	ns	
t_{RD1}	$\overline{RD}$ to Data in	2/5 t_{CY} -200		550	ns	
t_{RD2}	$\overline{PSEN}$ to Data in	3/10 t_{CY} -200		360	ns	
t_{AW}	Addr Setup to $\overline{WR}$	2/5 t_{CY} -150	600		ns	
t_{AD1}	Addr Setup to Data ($\overline{RD}$)	23/30 t_{CY} -250		1190	ns	
t_{AD2}	Addr Setup to Data ($\overline{PSEN}$)	3/5 t_{CY} -250		870	ns	
t_{AFC1}	Addr Float to $\overline{RD}$, $\overline{WR}$	2/15 t_{CY} -40	210		ns	
t_{AFC2}	Addr Float to $\overline{PSEN}$	1/30 t_{CY} -40	20		ns	
t_{LAFC1}	ALE to Control, ($\overline{RD}$, $\overline{WR}$)	1/5 t_{CY} -75	300		ns	
t_{LAFC2}	ALE to Control ($\overline{PSEN}$)	1/10 t_{CY} -75	120		ns	
t_{CA1}	Control to ALE ($\overline{RD}$, $\overline{WR}$, $\overline{PROG}$)	1/15 t_{CY} -40	90		ns	
t_{CA2}	Control to ALE ($\overline{PSEN}$)	4/15 t_{CY} -40	460		ns	
t_{CP}	Port Control Setup to $\overline{PROG}$	2/15 t_{CY} -80	170		ns	
t_{PC}	Port Control Hold to $\overline{PROG}$	4/15 t_{CY} -200	300		ns	
t_{PR}	$\overline{PROG}$ to P2 Input Valid	6/10 t_{CY} -120		1010	ns	
t_{PF}	Input Data Hold from $\overline{PROG}$	1/10 t_{CY}	0	190	ns	
t_{DP}	Output Data Setup	2/5 t_{CY} -150	600		ns	
t_{PD}	Output Data Hold	1/10 t_{CY} -50	140		ns	
t_{PP}	$\overline{PROG}$ Pulse Width	7/10 t_{CY} -250	1070		ns	
tPL	Port 2 I/O Setup to ALE	4/15 t_{CY} -200	300		ns	
t_{LP}	Port 2 I/O Hold to ALE	1/10 t_{CY} -100	90		ns	
t_{PV}	Port Output from ALE	3/10 t_{CY} +100	670		ns	
t_{CY}	Cycle Time	1/(f_{XTAL} x 15)	1.88	15	µs	(Note 4)
t_{0PRR}	T0 Rep Rate	3/15 t_{CY}	380		ns	

Notes:

1. Control Outputs CL = 80 pF
   BUS Outputs CL = 150pF
2. BUS High Impedance Load 20pf
3. Calculated values will be equal to or better than published I8048H values. f(t_{cy}) assumes 50% duty cycle on X1, X2.
4. Interrupt pin must remain low for at least 3 t_{cy} to ensure proper operation.

FOR ADDITIONAL SPECIFICATIONS, SEE COMMERCIAL DATA SHEET.

PRELIMINARY

I8049H/I8039HL
NEW HIGH PERFORMANCE SINGLE COMPONENT 8-BIT MICROCOMPUTER

INDUSTRIAL

- **I8049H Mask Programmable ROM**
- **I8039H Requires External ROM or EPROM**
- **11 MHz Operation**

- **8-Bit CPU, ROM, RAM, I/O in Single Package**
- **Single 5V ± 10% Supply**
- **1.36 μsec Cycle; All instructions 1 or 2 Cycles**
  Over 90 Instructions: 70% Single Byte
- **Pin Compatible with 8048/8748**
- **2K x 8 ROM**
  128 x 8 RAM
  27 I/O Lines
- **Interval Timer/Event Counter**
- **Easily Expandable Memory and I/O**
- **Compatible with MCS Memory and I/O**
- **Single Level Interrupt**
- **-40° C to 85° C Operation**

The Intel I8049H is a totally self-sufficient 8-bit parallel computer fabricated on a single silicon chip using Intel's advanced N-channel silicon gate HMOS process.

The I8049H contains a 2K x 8 program memory, a 128 x 8 RAM data memory, 27 I/O lines, and an 8-bit timer/counter in addition to on-board oscillator and clock circuits. For systems that require extra capability, the I8049H can be expanded using standard memories and MCS-80®/MCS-85® peripherals. The I8039HL is the equivalent to an I8049H without program memory.

To reduce development problems to a minimum and provide maximum flexibility, two interchangeable pin-compatible versions of this single component microcomputer exist: the I8049H with factory-programmed mask ROM program memory for low-cost high volume production, and the I8039HL without program memory for use with external program memories in prototype and preproduction systems.

This microprocessor is designed to be an efficient controller as well as an arithmetic processor. The I8049H has extensive bit handling capability as well as facilities for both binary and BCD arithmetic. Efficient use of program memory results from an instruction set consisting mostly of single byte instructions and no instructions over two bytes in length.

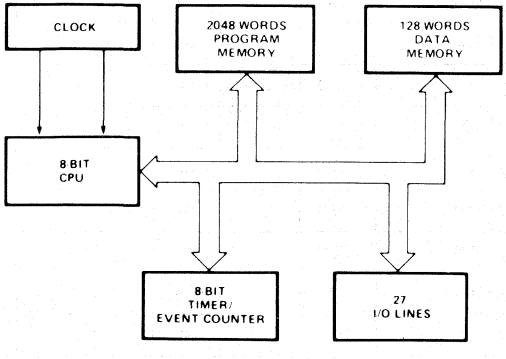

Figure 1. Block Diagram

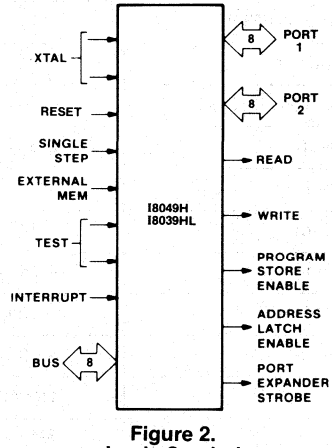

Figure 2. Logic Symbol

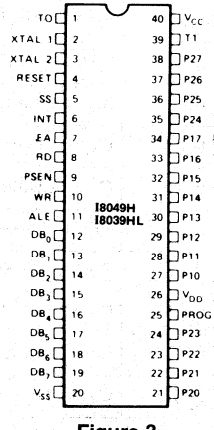

Figure 3. Pin Configuration

The following are trademarks of Intel Corporation and its affiliates and may be used only to identify Intel products: i, Int$_e$l, INTEL, INTELLEC, MCS, Im, iCS, ICE, UPI, BXP, iSBC, iSBX, Insite, iRMX, System 2000, CREDIT, iRMX/80, MULTIBUS, PROMPT, Promware, Megachassis, Library Manager, MAIN MULTIMODULE, and the combination of MCS, ICE, iSBC, iRMX or iCS and a numerical suffix. © INTEL CORPORATION, 1981.

AFN-02011A
AUGUST 1981

ABSOLUTE MAXIMUM RATINGS*

Ambient Temperature Under Bias ..... -40°C to 85°C
Storage Temperature ..... -65°C to +150°C
Voltage On Any Pin With Respect to Ground ..... -0.5V to +7V
Power Dissipation ..... 1.5 Watt

**NOTICE: Stresses above those listed under "Absolute Maximum Ratings" may cause permanent damage to the device. This is a stress rating only and functional operation of device at these or any other conditions above those indicated in the operational sections of this specification is not implied.*

D.C. CHARACTERISTICS (T_A = -40°C to 85°C, V_{CC} = V_{DD} = 5V ± 10%, V_{SS} = 0V)

Symbol	Parameter	Limits			Unit	Test Conditions
		Min	Typ	Max		
V_{IL}	Input Low Voltage (All Except $\overline{RESET}$, X1, X2)	-.5		.8	V	
V_{IL1}	Input Low Voltage ($\overline{RESET}$, X1, X2)	-.5		.6	V	
V_{IH}	Input High Voltage (All Except XTAL1, XTAL2, $\overline{RESET}$)	2.2		V_{CC}	V	
V_{IH1}	Input High Voltage (X1, X2, $\overline{RESET}$)	3.8		V_{CC}	V	
V_{OL}	Output Low Voltage (BUS)			.45	V	I_{OL} = 1.6 mA
V_{OL1}	Output Low Voltage ($\overline{RD}$, $\overline{WR}$, $\overline{PSEN}$, ALE)			.45	V	I_{OL} = 1.6 mA
V_{OL2}	Output Low Voltage (PROG)			.45	V	I_{OL} = .8 mA
V_{OL3}	Output Low Voltage (All Other Outputs)			.45	V	I_{OL} = 1.2 mA
V_{OH}	Output High Voltage (BUS)	2.4			V	I_{OH} = -280 μA
V_{OH1}	Output High Voltage ($\overline{RD}$, $\overline{WR}$, $\overline{PSEN}$, ALE)	2.4			V	I_{OH} = -80 μA
V_{OH2}	Output High Voltage (All Other Outputs)	2.4			V	I_{OH} = -30 μA
I_{L1}	Input Leakage Current (T1, $\overline{INT}$)			± 10	μA	$V_{SS} \leq V_{IN} \leq V_{CC}$
I_{LI1}	Input Leakage Current (P10-P17, P20-P27, EA, $\overline{SS}$)			-600	μA	V_{SS} + .45 $\leq V_{IN} \leq V_{CC}$
I_{L0}	Output Leakage Current (BUS, TO) (High Impedance State)			± 10	μA	V_{SS} + .45 $\leq V_{IN} \leq V_{CC}$
I_{DD}	V_{DD} Supply Current		10	20	mA	
I_{DD} + I_{CC}	Total Supply Current		75	145	mA	

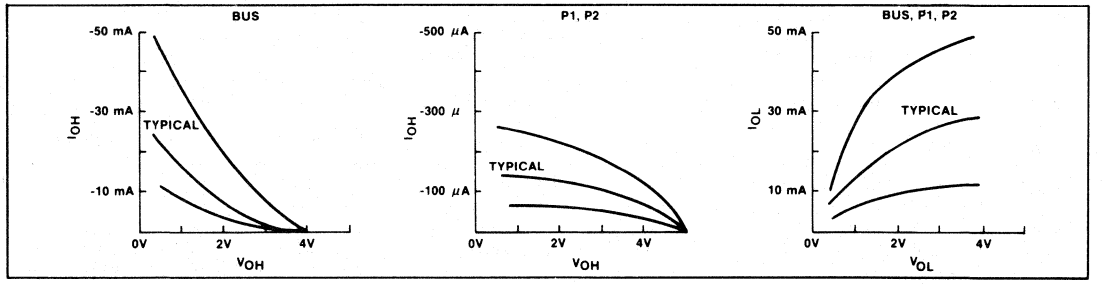

A.C. CHARACTERISTICS (T_A = -40°C to 85°C, V_{CC} = V_{DD} = 5V ± 10%, V_{SS} = 0V)

Symbol	Parameter	f (t_{CY}) (Note 3)	11 MHz		Unit	Conditions (Note 1)
			Min	Max		
t_{LL}	ALE Pulse Width	7/30 t_{CY} -170	150		ns	
t_{AL}	Addr Setup to ALE	1/5 t_{CY} -110	160		ns	
t_{LA}	Addr Hold from ALE	1/15 t_{CY} -40	50		ns	
t_{CC1}	Control Pulse Width ($\overline{RD}$, $\overline{WR}$)	1/2 t_{CY} -200	480		ns	
t_{CC2}	Control Pulse Width ($\overline{PSEN}$)	2/5 t_{CY} -200	350		ns	
t_{DW}	Data Setup before $\overline{WR}$	13/30 t_{CY} -200	390		ns	
t_{WD}	Data Hold after $\overline{WR}$	1/15 t_{CY} -50	40		ns	(Note 2)
t_{DR}	Data Hold ($\overline{RD}$, $\overline{PSEN}$)	1/10 t_{CY} -30	0	110	ns	
t_{RD1}	$\overline{RD}$ to Data in	2/5 t_{CY} -200		350	ns	
t_{RD2}	$\overline{PSEN}$ to Data in	3/10 t_{CY} -200		210	ns	
t_{AW}	Addr Setup to $\overline{WR}$	2/5 t_{CY} -150	400		ns	
t_{AD1}	Addr Setup to Data ($\overline{RD}$)	23/30 t_{CY} -250		800	ns	
t_{AD2}	Addr Setup to Data ($\overline{PSEN}$)	3/5 t_{CY} -250		570	ns	
t_{AFC1}	Addr Float to $\overline{RD}$, $\overline{WR}$	2/15 t_{CY} -40	140		ns	
t_{AFC2}	Addr Float to $\overline{PSEN}$	1/30 t_{CY} -40	10		ns	
t_{LAFC1}	ALE to Control, ($\overline{RD}$, $\overline{WR}$)	1/5 t_{CY} -75	200		ns	
t_{LAFC2}	ALE to Control ($\overline{PSEN}$)	1/10 t_{CY} -75	60		ns	
t_{CA1}	Control to ALE ($\overline{RD}$, $\overline{WR}$, $\overline{PROG}$)	1/15 t_{CY} -40	50		ns	
t_{CA2}	Control to ALE ($\overline{PSEN}$)	4/15 t_{CY} -40	320		ns	
t_{CP}	Port Control Setup to $\overline{PROG}$	2/15 t_{CY} -80	100		ns	
t_{PC}	Port Control Hold to $\overline{PROG}$	4/15 t_{CY} -200	160		ns	
t_{PR}	$\overline{PROG}$ to P2 Input Valid	6/10 t_{CY} -120		700	ns	
t_{PF}	Input Data Hold from $\overline{PROG}$	1/10 t_{CY}	0	140	ns	
t_{DP}	Output Data Setup	2/5 t_{CY} -150	400		ns	
t_{PD}	Output Data Hold	1/10 t_{CY} -50	90		ns	
t_{PP}	$\overline{PROG}$ Pulse Width	7/10 t_{CY} -250	700		ns	
tPL	Port 2 I/O Setup to ALE	4/15 t_{CY} -200	160		ns	
t_{LP}	Port 2 I/O Hold to ALE	1/10 t_{CY} -100	40		ns	
t_{PV}	Port Output from ALE	3/10 t_{CY} +100		510	ns	
t_{CY}	Cycle Time	1/(f_{XTAL} x 15)	1.36		µs	(Note 4)
t_{0PRR}	T0 Rep Rate	3/15 t_{CY}	270		ns	

Notes:

1. Control Outputs CL = 80 pF
   BUS Outputs CL = 150pF
2. BUS High Impedance Load 20pF
3. Calculated values will be equal to or better than published I8049H values. f(t_{CY}) assumes 50% duty cycle on X1, X2.
4. Interrupt pin must remain low for at least 3 t_{CY} to ensure proper operation.

AFN-02011A

I8085AH
SINGLE CHIP 8-BIT HMOS MICROPROCESSOR

INDUSTRIAL

- **Industrial Temperature Range: −40 to + 85°C**
- **Single +5V Power Supply with 10% Voltage Margins**
- **100% Software Compatible with 8080A**
- **1.3 μs Instruction Cycle**
- **On-Chip Clock Generator (with External Crystal, LC or RC Network)**
- **On-Chip System Controller; Advanced Cycle Status Information Available for Large System Control**
- **Four Vectored Interrupt Inputs (One is Non-Maskable) Plus an 8080A-Compatible Interrupt**
- **Serial In/Serial Out Port**
- **Decimal, Binary and Double Precision Arithmetic**
- **Direct Addressing Capability to 64k Bytes of Memory**

The Intel® I8085AH is a complete 8-bit parallel Central Processing Unit (CPU). Its instruction set is 100% software compatible with the 8080A microprocessor, and it is designed to improve the present 8080A's performance by higher system speed. Its high level of system integration allows a minimum system of three ICs [8085AH (CPU), 8156H (RAM I/O), and 8355/8755A (ROM/PROM/I/O)] while maintaining total system expandability.

The I8085AH incorporates all of the features that the 8224 (clock generator) and 8228 (system controller) provided for the 8080A, thereby offering a high level of system integration.

The I8085AH uses a multiplexed data bus. The address is split between the 8-bit address bus and the 8-bit data bus. The on-chip address latches of 8155H/8156H/8355/8755A memory products allow a direct interface with the I8085AH.

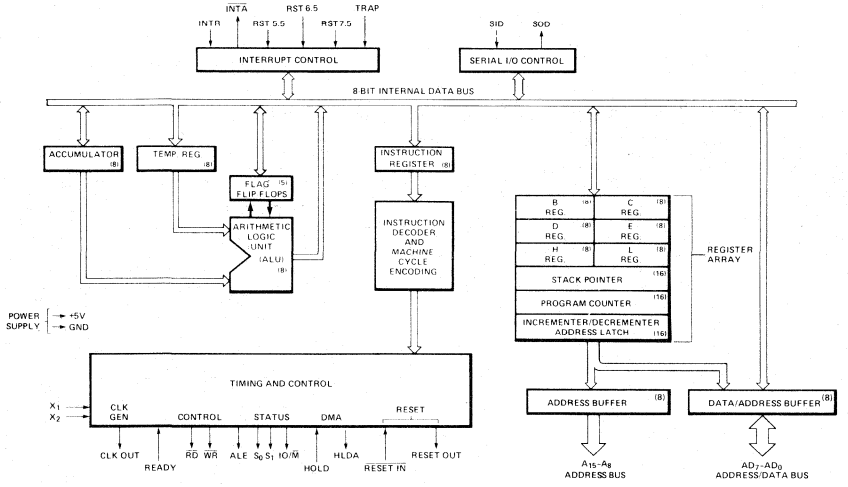

Figure 1. Block Diagram

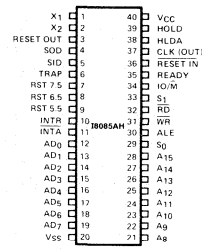

Figure 2. Pin Configuration

ABSOLUTE MAXIMUM RATINGS*

Ambient Temperature Under Bias ..... −40°C to 85°C
Storage Temperature ..... −65°C to +150°C
Voltage on Any Pin
With Respect to Ground ..... −0.3 to +7V
Power Dissipation ..... 1.5 Watt

NOTICE: Stresses above those listed under "Absolute Maximum Ratings" may cause permanent damage to the device. This is a stress rating only and functional operation of the device at these or other conditions above those indicated in the operational sections of this specification is not implied. Exposure to absolute maximum rating conditions for extended periods may affect device reliability.

D.C.CHARACTERISTICS (T_A = −40°C to 85°C, V_{CC} = 5V ±10%, V_{SS} = 0V; unless otherwise specified)

Symbol	Parameter	Min.	Max.	Units	Test Conditions
V_{IL}	Input Low Voltage	-0.5	+0.8	V	
V_{IH}	Input High Voltage	2.2	V_{CC} +0.5	V	
V_{OL}	Output Low Voltage		0.45	V	I_{OL} = 1.6mA
V_{OH}	Output High Voltage	2.4		V	I_{OH} = -400μA
I_{CC}	Power Supply Current		200	mA	
I_{IL}	Input Leakage		±10	μA	$V_{in} = V_{CC}$
I_{LO}	Output Leakage		±10	μA	$0.45V \leqslant V_{out} \leqslant V_{CC}$
V_{ILR}	Input Low Level, RESET	-0.5	+0.8	V	
V_{IHR}	Input High Level, RESET	2.4	V_{CC} +0.5	V	
V_{HY}	Hysteresis, RESET	0.25		V	

NOTE:
1. The I8085AH will operate as a 8085AH-2 from 0°C to 70°C.

Table 2. Bus Timing Specification as a T_{CYC} Dependent

t_{AL}	–	(1/2) T - 50	MIN
t_{LA}	–	(1/2) T - 60	MIN
t_{LL}	–	(1/2) T - 40	MIN
t_{LCK}	–	(1/2) T - 60	MIN
t_{LC}	–	(1/2) T - 30	MIN
t_{AD}	–	(5/2 + N) T - 225	MAX
t_{RD}	–	(3/2 + N) T - 200	MAX
t_{RAE}	–	(1/2) T - 60	MIN
t_{CA}	–	(1/2) T - 40	MIN
t_{DW}	–	(3/2 + N) T - 60	MIN

NOTE:
N is equal to the total WAIT states.
T = t_{CYC}.

t_{WD}	–	(1/2) T - 80	MIN
t_{CC}	–	(3/2 + N) T - 80	MIN
t_{CL}	–	(1/2) T - 110	MIN
t_{ARY}	–	(3/2) T - 260	MAX
t_{HACK}	–	(1/2) T - 50	MIN
t_{HABF}	–	(1/2) T + 30	MAX
t_{HABE}	–	(1/2) T + 30	MAX
t_{AC}	–	(2/2) T - 50	MIN
t_1	–	(1/2) T - 80	MIN
t_2	–	(1/2) T - 40	MIN
t_{RV}	–	(3/2) T - 80	MIN
t_{INS}	–	(1/2) T + 200	MIN

A.C. CHARACTERISTICS (T_A = −40°C to 85°C, V_{CC} = 5V ±10%, V_{SS} = 0V)

Symbol	Parameter	Min.	Max.	Units	Test Conditions
T_{CYC}	CLK Cycle Period	320	2000	ns	See Notes 1, 2, 3, 4, 5
t_1	CLK Low Time	80		ns	
t_2	CLK High Time	120		ns	
t_r, t_f	CLK Rise and Fall Time		30	ns	
t_{AL}	Address (A8–A15) Valid Before Trailing Edge of ALE(1)	110		ns	
t_{ALL}	Address (A0–A7) Valid Before Trailing Edge of ALE	90		ns	
t_{LA}	Address Hold Time After ALE	100		ns	
t_{LL}	ALE Width	140		ns	
t_{LCK}	ALE Low During CLK High	100		ns	
t_{LC}	Trailing Edge of ALE to Leading Edge of Control	130		ns	
t_{AFR}	Address Float After Leading Edge of $\overline{READ}$ ($\overline{INTA}$)		0	ns	
t_{AD}	Valid Address to Valid Data In		575	ns	
t_{RD}	$\overline{READ}$ (or $\overline{INTA}$) to Valid Data		300	ns	
t_{RDH}	Data Hold Time After $\overline{READ}$ ($\overline{INTA}$)	0		ns	
t_{RAE}	Trailing Edge of $\overline{READ}$ to Re-Enabling of Address	150		ns	T_{CYC} = 320ns; C_L = 150 pF
t_{CA}	Address (A8–A15) Valid After Control	120		ns	
t_{DW}	Data Valid to Trailing Edge of $\overline{WRITE}$	420		ns	
t_{WD}	Data Valid After Trailing Edge of $\overline{WRITE}$	100		ns	
t_{CC}	Width of Control Low ($\overline{RD}$, $\overline{WR}$, $\overline{INTA}$)	400		ns	
t_{CL}	Trailing Edge of Control to Leading Edge of ALE	50		ns	
t_{ARY}	READY Valid From Address Valid		220	ns	
t_{RYS}	READY Setup Time to Leading Edge of CLK	110		ns	
t_{RYH}	READY Hold Time	0		ns	
t_{HACK}	HLDA Valid to Trailing Edge of CLK	110		ns	
t_{HABF}	Bus Float After HLDA		210	ns	
t_{RV}	Control Trailing Edge to Leading Edge of Next Control	400		ns	
t_{AC}	Address Valid to Leading Edge of Control	270		ns	
t_{HDS}	HOLD Setup Time to Trailing Edge of CLK	170		ns	
t_{HDH}	HOLD Hold Time	0		ns	
t_{INS}	INTR Setup Time to Leading Edge of CLK (M1, T1 only). Also RST and TRAP	360		ns	
t_{INH}	INTR Hold Time	0		ns	

NOTES:
1. A8–15 address specs apply to IO/M, SO and S1. A8–15 are undefined during t_4–t_6 of OF cycle whereas IO/$\overline{M}$ S_0 and S_1 are stable.
2. For all output timing where C_L = 150pf use the following correction factors:25pf ≤ C_L < 150pf : −.10 ns/pf; 150pf < C_L ≤ 300 pf : +.30 ns/pf.
3. Output timings are measured with purely capacitive load.
4. All timings are measured at output voltage V_L = .8V, V_H = 2.0V, and 1.5V with 20ns rise and fall time on inputs.
5. All timings are measured at input voltage V_{IL} = .45V, V_{IH} = 2.4V.
6. To calculate timing specifications at other values of T_{CYC} use the table in Table 2.
7. L.E. = leading edge; T.E. = trailing edge.

A.C. TESTING INPUT, OUTPUT WAVEFORM

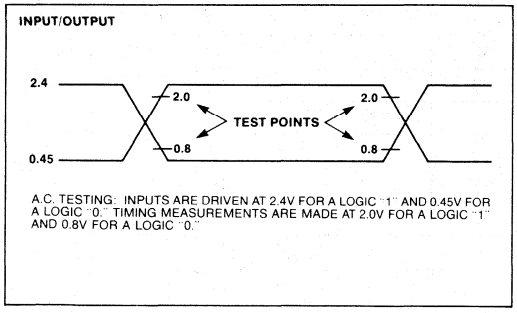

A.C. TESTING LOAD CIRCUIT

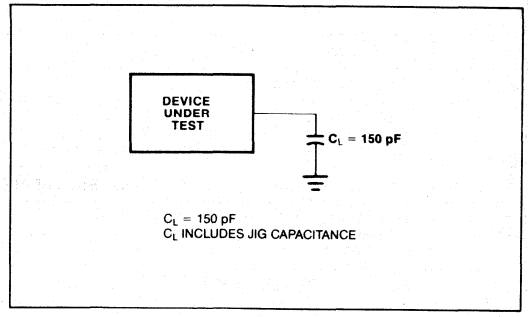

INDUSTRIAL iAPX 86/10
16-BIT HMOS MICROPROCESSOR

INDUSTRIAL

- **Direct Addressing Capability to 1 MByte of Memory**
- **Assembly Language Compatible with 8080/8085**
- **14 Word, by 16-Bit Register Set with Symmetrical Operations**
- **24 Operand Addressing Modes**
- **Bit, Byte, Word, and Block Operations**
- **8-and 16-Bit Signed and Unsigned Arithmetic in Binary or Decimal Including Multiply and Divide**
- **5 MHz Clock Rate**
- **MULTIBUS™ System Compatible Interface**
- **Industrial Temperature Range: −40°C to +85°C**

The Intel® Industrial iAPX 86/10 is a new generation, high performance 16-bit microprocessor implemented in N-channel, depletion load, silicon gate technology (HMOS), and packaged in a 40-pin CerDIP package. The processor has attributes of both 8- and 16-bit microprocessors. It addresses memory as a sequence of 8-bit bytes, but has a 16-bit wide physical path to memory for high performance.

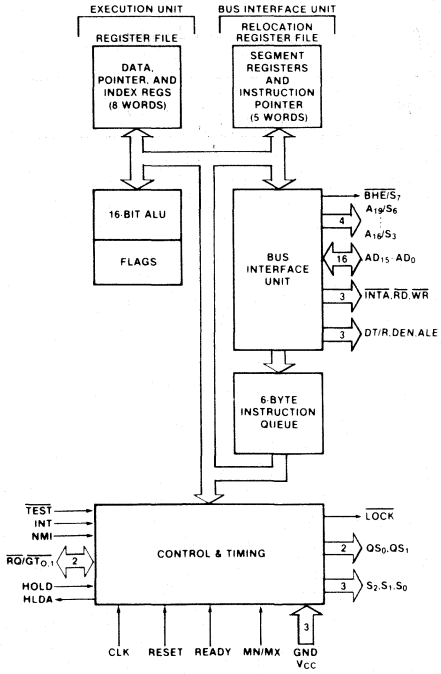

Figure 1. Block Diagram

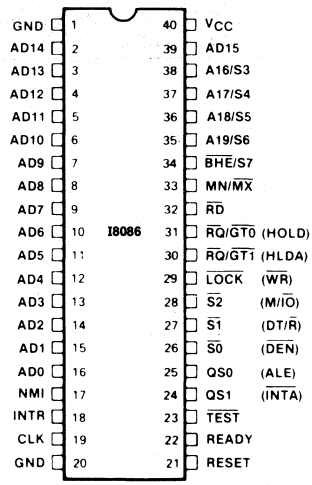

Figure 2. Pin Configuration

ABSOLUTE MAXIMUM RATINGS*

Ambient Temperature Under Bias . . . . – 40°C to + 85°C
Storage Temperature . . . . . – 65°C to + 150°C
Voltage on Any Pin with
Respect to Ground . . . . . – 1.0 to + 7V
Power Dissipation . . . . . 2.5 Watt

NOTICE: Stresses above those listed under "Absolute Maximum Ratings" may cause permanent damage to the device. This is a stress rating only and functional operation of the device at these or other conditions above those indicated in the operational sections of this specification is not implied. Exposure to absolute maximum rating conditions for extended periods may affect device reliability.

D.C. CHARACTERISTICS (T_A = −40°C to +85°C, V_{CC} = 5V ±10%)

Symbol	Parameter	Min.	Max.	Units	Test Conditions
V_{IL}	Input Low Voltage	−0.5	+0.8	V	
V_{IH}	Input High Voltage	2.0	V_{CC}+0.5	V	
V_{OL}	Output Low Voltage		0.45	V	I_{OL}=2.0 mA
V_{OH}	Output High Voltage	2.4		V	I_{OH}= −400 μA
I_{CC}	Power Supply Current iAPX 86		340	mA	T_A=25°C
I_{LI}	Input Leakage Current		±10	μA	$0V < V_{IN} < V_{CC}$
I_{LO}	Output Leakage Current		±10	μA	$0.45V \leq V_{OUT} \leq V_{CC}$
V_{CL}	Clock Input Low Voltage	−0.5	+0.6	V	
V_{CH}	Clock Input High Voltage	3.9	V_{CC}+1.0	V	
C_{IN}	Capacitance of Input Buffer (All input except $AD_0 - AD_{15}$, $\overline{RQ}/\overline{GT}$)		15	pF	fc=1 MHz
C_{IO}	Capacitance of I/O Buffer ($AD_0 - AD_{15}$, $\overline{RQ}/\overline{GT}$)		15	pF	fc=1 MHz

A.C. CHARACTERISTICS (T_A = −40°C to +85°C, V_{CC} = 5V ±10%)

MINIMUM COMPLEXITY SYSTEM TIMING REQUIREMENTS

Symbol	Parameter	iAPX 86 Min.	iAPX 86 Max.	Units	Test Conditions
TCLCL	CLK Cycle Period — 8086	200	500	ns	
TCLCH	CLK Low Time	(⅔ TCLCL)−15		ns	
TCHCL	CLK High Time	(⅓ TCLCL) + 2		ns	
TCH1CH2	CLK Rise Time		10	ns	From 1.0V to 35.V
TCL2CL1	CLK Fall Time		10	ns	From 3.5V to 1.0V
TDVCL	Data In Setup Time	30		ns	
TCLDX	Data In Hold Time	10		ns	
TR1VCL	RDY Setup Time into 8284 (See Notes 1, 2)	35		ns	
TCLR1X	RDY Hold Time into 8284 (See Notes, 1, 2)	0		ns	
TRYHCH	READY Setup Time Into 8086	(⅔ TCLCL)−15		ns	
TCHRYX	READY Hold Time Into 8086	30		ns	
TRYLCL	READY Inactive to CLK (See Note 3)	−8		ns	
THVCH	HOLD Setup Time	35		ns	
TINVCH	INTR, NMI, $\overline{TEST}$ Setup Time (See Note 2)	30		ns	
TILIH	Input Rise Time (Except CLK)		20	ns	From 0.8V to 2.0V
TIHIL	Input Fall Time (Except CLK)		12	ns	From 2.0V to 0.8V

TIMING RESPONSES

Symbol	Parameter	iAPX 86 Min.	iAPX 86 Max.	Units	Test Conditions
TCLAV	Address Valid Delay	10	110	ns	C_L = 20-100 pF for all 8086 Outputs (In addition to 8086 self-load)
TCLAX	Address Hold Time	10		ns	
TCLAZ	Address Float Delay	TCLAX	80	ns	
TLHLL	ALE Width	TCLCH-20		ns	
TCLLH	ALE Active Delay		80	ns	
TCHLL	ALE Inactive Delay		85	ns	
TLLAX	Address Hold Time to ALE Inactive	TCHCL-10		ns	
TCLDV	Data Valid Delay	10	110	ns	
TCHDX	Data Hold Time	10		ns	
TWHDX	Data Hold Time After WR	TCLCH-30		ns	
TCVCTV	Control Active Delay 1	10	110	ns	
TCHCTV	Control Active Delay 2	10	110	ns	
TCVCTX	Control Inactive Delay	10	110	ns	
TAZRL	Address Float to READ Active	0		ns	
TCLRL	$\overline{RD}$ Active Delay	10	165	ns	
TCLRH	$\overline{RD}$ Inactive Delay	10	150	ns	
TRHAV	$\overline{RD}$ Inactive to Next Address Active	TCLCL-45		ns	
TCLHAV	HLDA Valid Delay	10	160	ns	
TRLRH	$\overline{RD}$ Width	2TCLCL-75		ns	
TWLWH	$\overline{WR}$ Width	2TCLCL-60		ns	
TAVAL	Address Valid to ALE Low	TCLCH-60		ns	
TOLOH	Output Rise Time		20	ns	From 0.8V to 2.0V
TOHOL	Output Fall Time		12	ns	From 2.0V to 0.8V

NOTES:
1. Signal at 8284 shown for reference only.
2. Setup requirement for asynchronous signal only to guarantee recognition at next CLK.
3. Applies only to T2 state (8 ns into T3).

A.C. TESTING INPUT, OUTPUT WAVEFORM

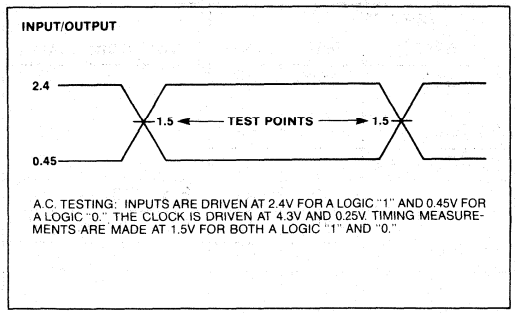

A.C. TESTING: INPUTS ARE DRIVEN AT 2.4V FOR A LOGIC "1" AND 0.45V FOR A LOGIC "0." THE CLOCK IS DRIVEN AT 4.3V AND 0.25V. TIMING MEASUREMENTS ARE MADE AT 1.5V FOR BOTH A LOGIC "1" AND "0."

A.C. TESTING LOAD CIRCUIT

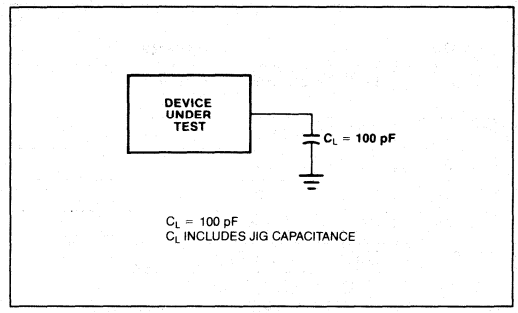

C_L = 100 pF
C_L INCLUDES JIG CAPACITANCE

WAVEFORMS

BUS TIMING — MINIMUM MODE SYSTEM

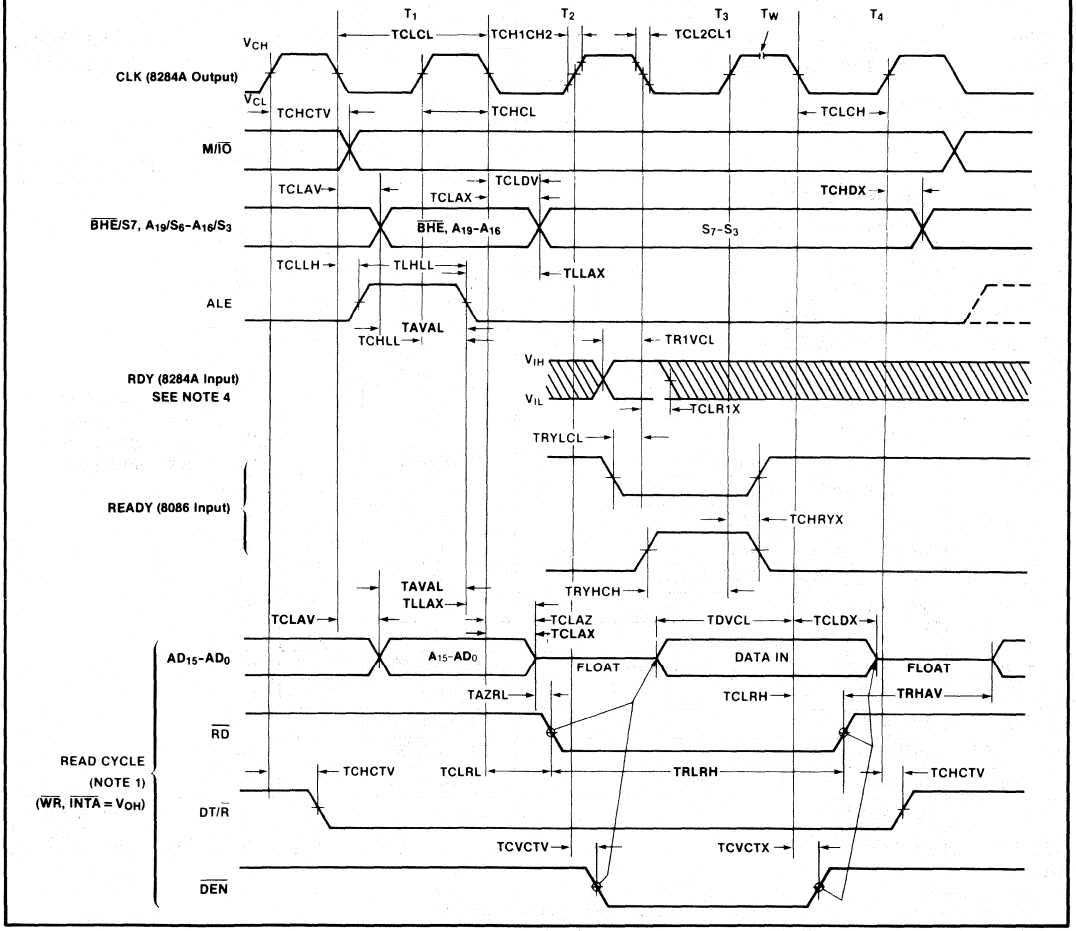

WAVEFORMS (Continued)

BUS TIMING — MINIMUM MODE SYSTEM (Continued)

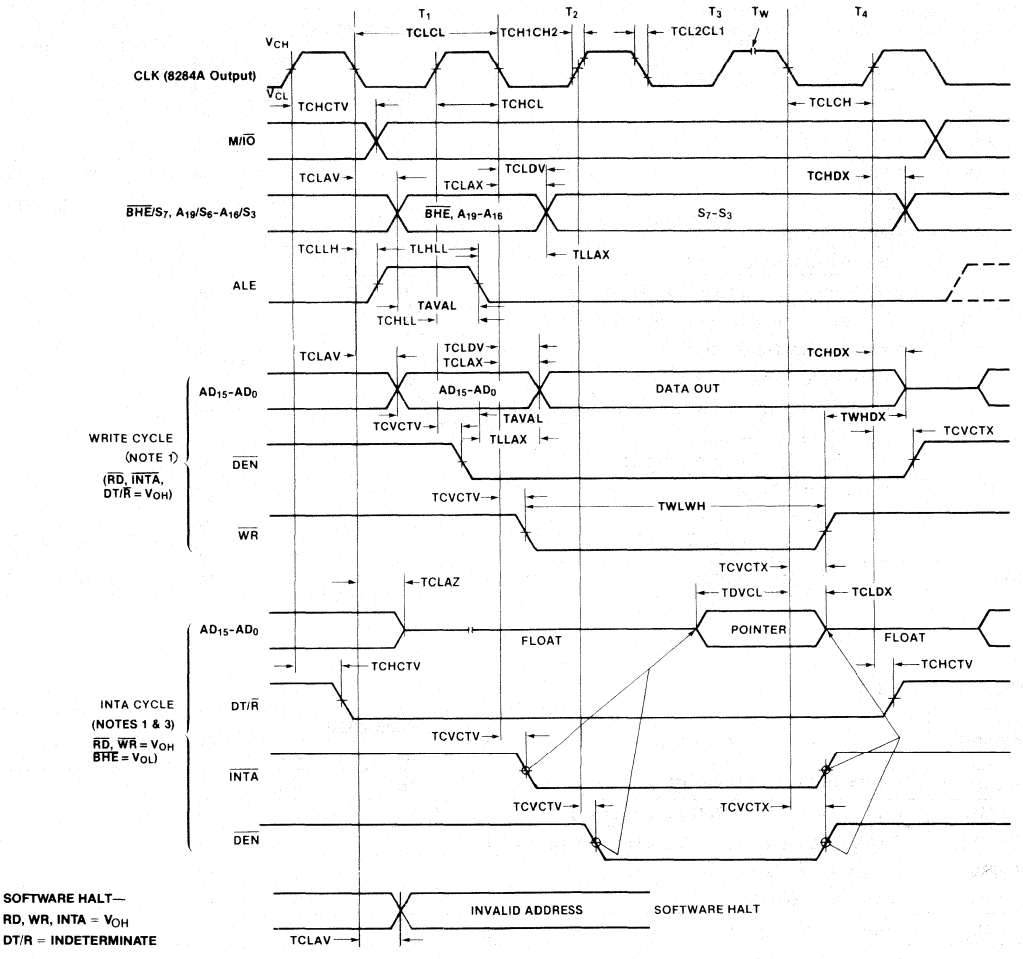

NOTES:

1. All signals switch between V_{OH} and V_{OL} unless otherwise specified.
2. RDY is sampled near the end of T_2, T_3, T_W to determine if T_W machines states are to be inserted.
3. Two INTA cycles run back-to-back. The 8086 LOCAL ADDR/DATA BUS is floating during both INTA cycles. Control signals shown for second INTA cycle.
4. Signals at 8284A are shown for reference only.
5. All timing measurements are made at 1.5V unless otherwise noted.

A.C. CHARACTERISTICS

MAX MODE SYSTEM (USING 8288 BUS CONTROLLER) TIMING REQUIREMENTS

Symbol	Parameter	8086/8086-4		Units	Test Conditions
		Min.	Max.		
TCLCL	CLK Cycle Period — 8086	200	500	ns	
TCLCH	CLK Low Time	118		ns	
TCHCL	CLK High Time	69		ns	
TCH1CH2	CLK Rise Time		10	ns	From 1.0V to 3.5V
TCL2CL1	CLK Fall Time		10	ns	From 3.5V to 1.0V
TDVCL	Data in Setup Time	30		ns	
TCLDX	Data in Hold Time	10		ns	
TR1VCL	RDY Setup Time into 8284 (See Notes 1, 2)	35		ns	
TCLR1X	RDY Hold Time into 8284 (See Notes 1, 2)	0		ns	
TRYHCH	Ready Setup Time into 8086	118		ns	
TCHRYX	Ready Hold Time into 8086	30		ns	
TRYLCL	READY Inactive to CLK (See Note 4)	−8		ns	
TINVCH	Setup Time for Recognition (INTR, NMI, TEST) (See Note 2)	30		ns	
TGVCH	RQ/GT Setup Time	30		ns	
TCHGX	RQ Hold Time into 8086	40		ns	
TILIH	Input Rise Time (Except CLK)		20	ns	From 0.8V to 2.0V
TIHIL	Input Fall Time (Except CLK)		12	ns	From 2.0V to 0.8V

TIMING RESPONSES

Symbol	Parameter	8086/8086-4		Units	Test Conditions
		Min.	Max.		
TCLML	Command Active Delay (See Note 1)	10	35	ns	C_L = 20–100 pF for all 8086 Outputs (In addition to 8086 self-load)
TCLMH	Command Inactive Delay (See Note 1)	10	35	ns	
TRYHSH	READY Active to Status Passive (See Note 3)		110	ns	
TCHSV	Status Active Delay	10	110	ns	
TCLSH	Status Inactive Delay	10	130	ns	
TCLAV	Address Valid Delay	10	110	ns	
TCLAX	Address Hold Time	10		ns	
TCLAZ	Address Float Delay	TCLAX	80	ns	
TSVLH	Status Valid to ALE High (See Note 1)		15	ns	
TSVMCH	Status Valid to MCE High (See Note 1)		15	ns	
TCLLH	CLK Low to ALE Valid (See Note 1)		15	ns	
TCLMCH	CLK Low to MCE High (See Note 1)		15	ns	
TCHLL	ALE Inactive Delay (See Note 1)		15	ns	
TCLMCL	MCE Inactive Delay (See Note 1)		15	ns	
TCLDV	Data Valid Delay	10	110	ns	
TCHDX	Data Hold Time	10		ns	
TCVNV	Control Active Delay (See Note 1)	5	45	ns	
TCVNX	Control Inactive Delay (See Note 1)	10	45	ns	
TAZRL	Address Float to Read Active	0		ns	
TCLRL	RD Active Delay	10	165	ns	

A.C. CHARACTERISTICS (Continued)

Symbol	Parameter	8086/8086-4		Units	Test Conditions
		Min.	Max.		
TCLRH	RD Inactive Delay	10	150	ns	
TRHAV	RD Inactive to Next Address Active	TCLCL-45		ns	
TCHDTL	Direction Control Active Delay (See Note 1)		50	ns	
TCHDTH	Direction Control Inactive Delay (See Note 1)		30	ns	
TCLGL	GT Active Delay	0	85	ns	
TCLGH	GT Inactive Delay	0	85	ns	
TRLRH	RD Width	2TCLCL-75		ns	
TOLOH	Output Rise Time		20	ns	From 0.8V to 2.0V
TOHOL	Output Fall Time		12	ns	From 2.0V to 0.8V

NOTES:
1. Signal at 8284 or 8288 shown for reference only.
2. Setup requirement for asynchronous signal only to guarantee recognition at next CLK.
3. Applies only to T3 and wait states.
4. Applies only to T2 state (8 ns into T3).

WAVEFORMS

BUS TIMING — MAXIMUM MODE SYSTEM (USING 8288)

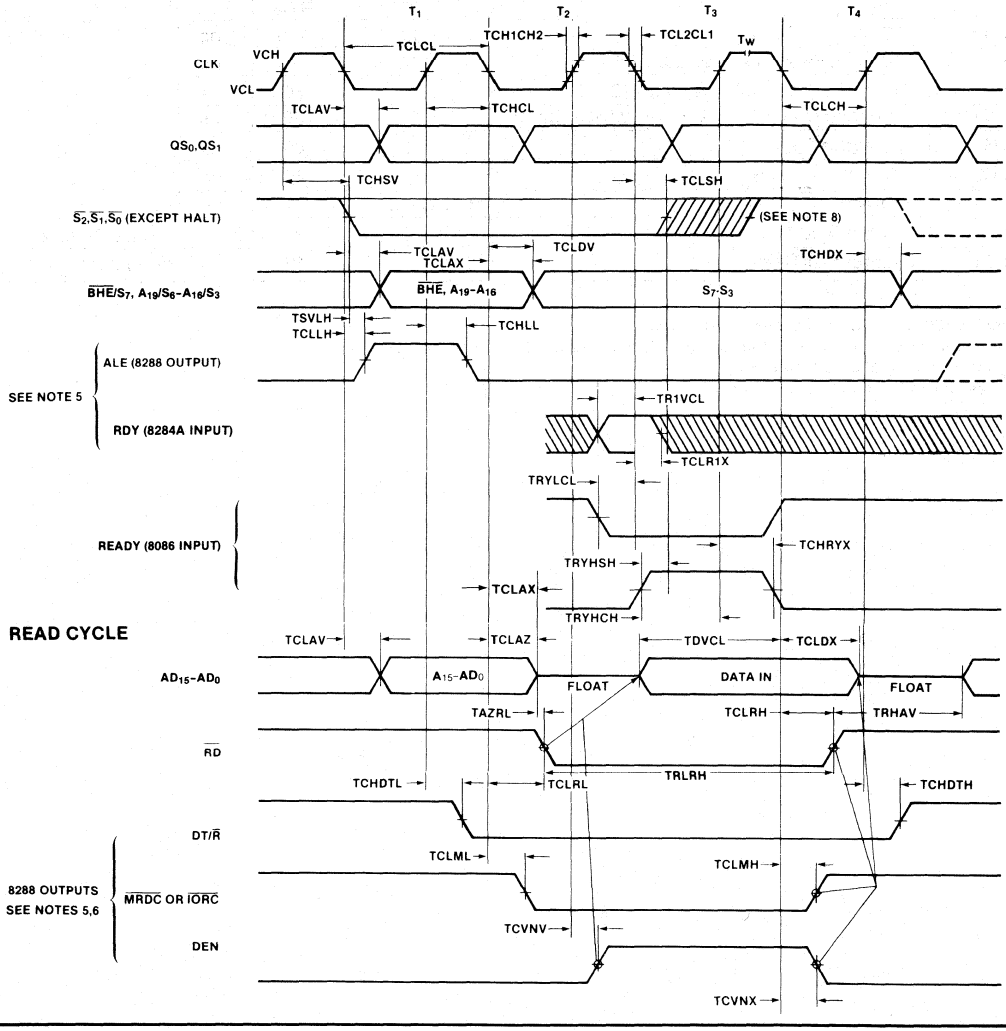

WAVEFORMS (Continued)

BUS TIMING — MAXIMUM MODE SYSTEM (USING 8288) (Continued)

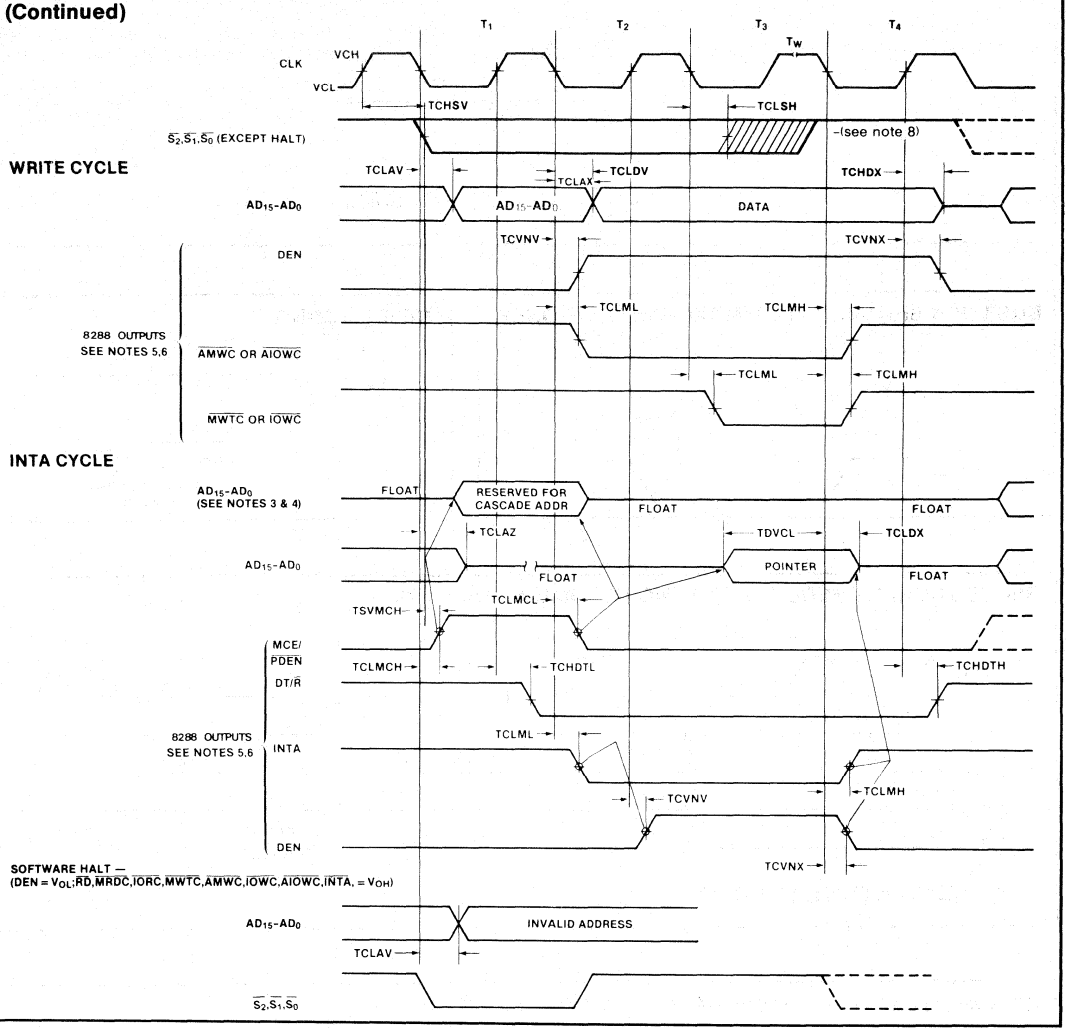

NOTES:

1. All signals switch between V_{OH} and V_{OL} unless otherwise specified.
2. RDY is sampled near the end of T_2, T_3, T_W to determine if T_W machines states are to be inserted.
3. Cascade address is valid between first and second INTA cycle.
4. Two INTA cycles run back-to-back. The 8086 LOCAL ADDR/DATA BUS is floating during both INTA cycles. Control for pointer address is shown for second INTA cycle.
5. Signals at 8284A or 8288 are shown for reference only.
6. The issuance of the 8288 command and control signals ($\overline{MRDC}$, $\overline{MWTC}$, $\overline{AMWC}$, $\overline{IORC}$, $\overline{IOWC}$, $\overline{AIOWC}$, $\overline{INTA}$ and DEN) lags the active high 8288 CEN.
7. All timing measurements are made at 1.5V unless otherwise noted.
8. Status inactive in state just prior to T_4.

WAVEFORMS (Continued)

ASYNCHRONOUS SIGNAL RECOGNITION

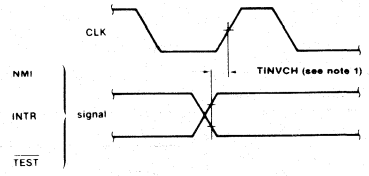

NOTE: 1. SETUP REQUIREMENTS FOR ASYNCHRONOUS SIGNALS ONLY TO GUARANTEE RECOGNITION AT NEXT CLK

BUS LOCK SIGNAL TIMING (MAXIMUM MODE ONLY)

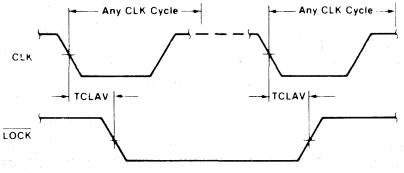

RESET TIMING

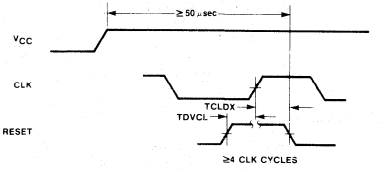

REQUEST/GRANT SEQUENCE TIMING (MAXIMUM MODE ONLY)

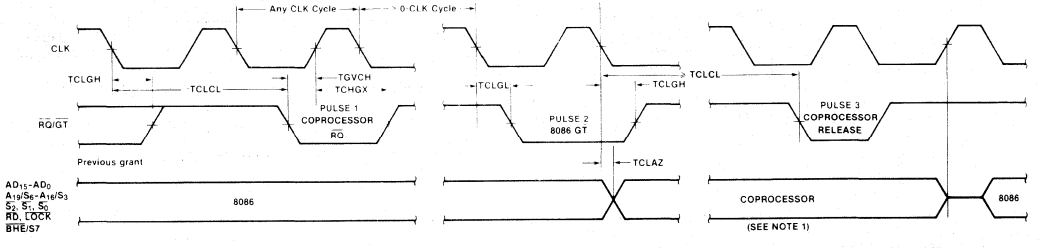

NOTES: 1. THE COPROCESSOR MAY NOT DRIVE THE BUSES OUTSIDE THE REGION SHOWN WITHOUT RISKING CONTENTION

HOLD/HOLD ACKNOWLEDGE TIMING (MINIMUM MODE ONLY)

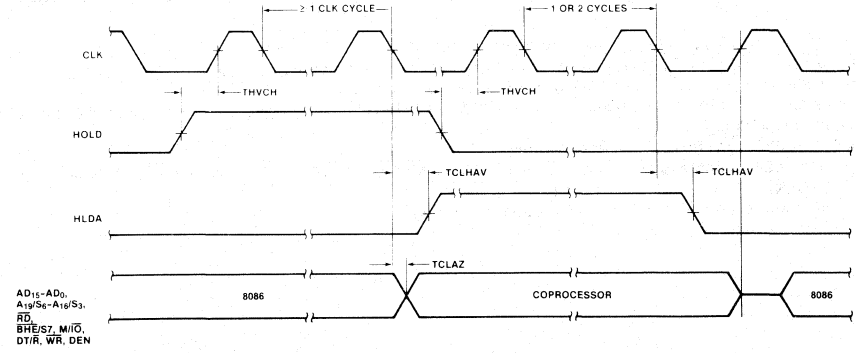

I8155H/8156H
2048-BIT STATIC HMOS RAM WITH I/O PORTS AND TIMER

INDUSTRIAL

- **Industrial Temperature Range: −40°C to +85°C**
- **256 Word x 8 Bits**
- **Single +5V Power Supply with 10% Voltage Margins**
- **Completely Static Operation**
- **Internal Address Latch**
- **2 Programmable 8 Bit I/O Ports**
- **1 Programmable 6-Bit I/O Port**
- **Programmable 14-Bit Binary Counter/ Timer**
- **Multiplexed Address and Data Bus**
- **40 Pin DIP**

The I8155H and I8156H are RAM and I/O chips to be used in the MCS-85® microcomputer system. The RAM portion is designed with 2048 static cells organized as 256 x 8. They have a maximum access time of 400 ns to permit use with no wait states in 8085AH CPU.

The I/O portion consists of three general purpose I/O ports. One of the three ports can be programmed to be status pins, thus allowing the other two ports to operate in handshake mode.

A 14-bit programmable counter/timer is also included on-chip to provide either a square wave or terminal count pulse for the CPU system depending on timer mode.

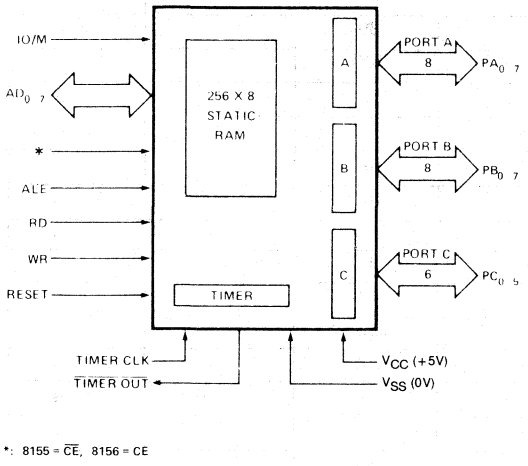

*: 8155 = $\overline{CE}$, 8156 = CE

Figure 1. Block Diagram

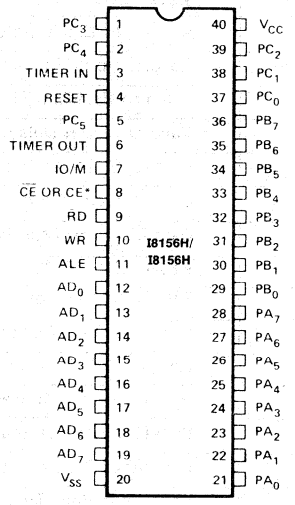

Figure 2. Pin Configuration

ABSOLUTE MAXIMUM RATINGS*

Temperature Under Bias ..... – 40°C to 85°C
Storage Temperature ..... -65°C to +150°C
Voltage on Any Pin
With Respect to Ground ..... -0.5V to +7V
Power Dissipation 1.5W

**NOTICE: Stresses above those listed under "Absolute Maximum Ratings" may cause permanent damage to the device. This is a stress rating only and functional operation of the device at these or any other conditions above those indicated in the operational sections of this specification is not implied. Exposure to absolute maximum rating conditions for extended periods may affect device reliability.*

D.C. CHARACTERISTICS (T_A = −40°C to 85°C, V_{CC} = 5V ±10%)

Symbol	Parameter	Min.	Max	Units	Test Condtions
V_{IL}	Input Low Voltage	-0.5	0.8	V	
V_{IH}	Input High Voltage	2.0	V_{CC}+0.5	V	
V_{OL}	Output Low Voltage		0.45	V	I_{OL} = 1.6mA
V_{OH}	Output High Voltage	2.4		V	I_{OH} = −400μA
I_{IL}	Input Leakage		±10	μA	$0V \leq V_{IN} \leq V_{CC}$
I_{LO}	Output Leakage Current		±10	μA	$0.45V \leq V_{OUT} \leq V_{CC}$
I_{CC}	V_{CC} Supply Current		180	mA	
I_{IL}(CE)	Chip Enable Leakage 8155 8156		 +100 −100	 μA μA	$0V \leq V_{IN} \leq V_{CC}$

A.C. CHARACTERISTICS (T_A = −40°C to 85°C, V_{CC} = 5V ± 10%)

Symbol	Parameter	8155/8156		Units
		Min.	Max.	
t_{AL}	Address to Latch Set Up Time	50		ns
t_{LA}	Address Hold Time after Latch	80		ns
t_{LC}	Latch to READ/WRITE Control	100		ns
t_{RD}	Valid Data Out Delay from READ Control		170	ns
t_{AD}	Address Stable to Data Out Valid		400	ns
t_{LL}	Latch Enable Width	100		ns
t_{RDF}	Data Bus Float after READ	0	100	ns
t_{CL}	READ/WRITE Control to Latch Eanble	20		ns
t_{CC}	READ/WRITE Control Width	250		ns
t_{DW}	Data In to WRITE Set Up Time	150		ns
t_{WD}	Data In Hold Time after WRITE	25		ns
t_{RV}	Recovery Time Between Controls	300		ns
t_{WP}	WRITE to Port Output		400	ns
t_{PR}	Port Input Set Up Time			ns
t_{RP}	Port Input Hold Time	50		ns
t_{SBF}	Strobe to Buffer Full		400	ns
t_{SS}	Strobe Width	200		ns
t_{RBE}	READ to Buffer Empty		400	ns

A.C. CHARACTERISTICS (Continued) (T_A = −40°C to 85°C, V_{CC} = 5V ±10%)

Symbol	Parameter	8155/8156 Min.	8155/8156 Max.	Units
t_{SI}	Strobe to INTR On		400	ns
t_{RDI}	READ to INTR Off		400	ns
t_{PSS}	Port Set Up Time to Strobe	50		ns
t_{PHS}	Port Hold Time after Strobe	120		ns
t_{SBE}	Strobe to Buffer Empty		400	ns
t_{WBF}	WRITE to Buffer Full		400	ns
t_{WI}	WRITE to INTR Off		400	ns
t_{TL}	TIMER-IN to $\overline{\text{TIMER-OUT}}$ Low		400	ns
t_{TH}	TIMER-IN to $\overline{\text{TIMER-OUT}}$ High		400	ns
t_{RDE}	Data Bus Enable from READ Control	10		ns
t_1	TIMER-IN Low Time	80		ns
t_2	TIMER-IN High Time	120		ns

A.C. TESTING INPUT, OUTPUT WAVEFORM

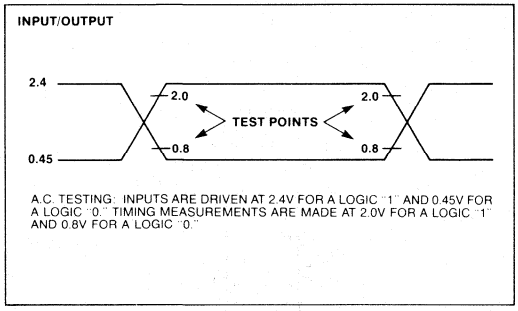

A.C. TESTING LOAD CIRCUIT

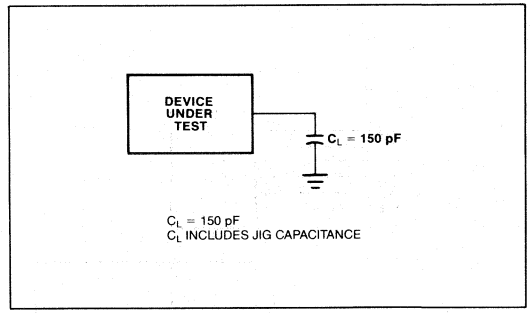

I8185*
1024 x 8-BIT STATIC RAM FOR MCS-85®

*Compatible with 8085A.

INDUSTRIAL

- **Multiplexed Address and Data Bus**
- **Directly Compatible with 8085A and 8088 Microprocessors**
- **Low Operating Power Dissipation**
- **Low Standby Power Dissipation**
- **Single +5V Supply**
- **High Density 18-Pin Package**
- **Industrial Temperature Range: −40°C to +85°C**

The Intel® I8185 is an 8192-bit static random access memory (RAM) organized as 1024 words by 8 bits using N-channel silicon gate MOS technology. The multiplexed address and data bus allows the 8185 to interface directly to the 8085A and 8088 microprocessors to provide a maximum level of system integration.

The low standby power dissipation minimizes system power requirements when the 8185 is disabled.

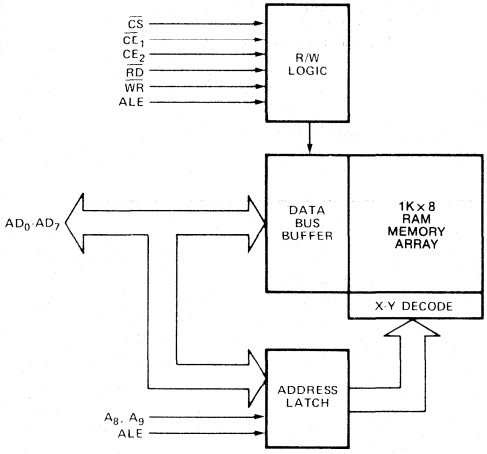

Figure 1. Block Diagram

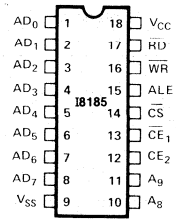

AD_0-AD_7	ADDRESS/DATA LINES
A_8-A_9	ADDRESS LINES
$\overline{CS}$	CHIP SELECT
$\overline{CE_1}$	CHIP ENABLE (IO/$\overline{M}$)
CE_2	CHIP ENABLE
ALE	ADDRESS LATCH ENABLE
$\overline{RD}$	READ ENABLE
$\overline{WR}$	WRITE ENABLE

Figure 2. Pin Configuration

FUNCTIONAL DESCRIPTION

The 8185 has been designed to provide for direct interface to the multiplexed bus structure and bus timing of the 8085A microprocessor.

At the beginning of an 8185 memory access cycle, the 8-bit address on AD_{0-7}, A_8 and A_9, and the status of $\overline{CE}_1$ and CE_2 are all latched internally in the 8185 by the falling edge of ALE. If the latched status of both $\overline{CE}_1$ and CE_2 are active, the 8185 powers itself up, but no action occurs until the $\overline{CS}$ line goes low and the appropriate $\overline{RD}$ or $\overline{WR}$ control signal input is activated.

The $\overline{CS}$ input is not latched by the 8185 in order to allow the maximum amount of time for address decoding in selecting the 8185 chip. Maximum power consumption savings will occur, however, only when $\overline{CE}_1$ and CE_2 are activated selectively to power down the 8185 when it is not in use. A possible connection would be to wire the 8085A's IO/$\overline{M}$ line to the 8185's $\overline{CE}_1$ input, thereby keeping the 8185 powered down during I/O and interrupt cycles.

Table 1.
Truth Table for
Power Down and Function Enable

$\overline{CE}_1$	CE_2	$\overline{CS}$	(CS*)[2]	8185 Status
1	X	X	0	Power Down and Function Disable[1]
X	0	X	0	Power Down and Function Disable[1]
0	1	1	0	Powered Up and Function Disable[1]
0	1	0	1	Powered Up and Enabled

NOTES:
X: Don't Care.
1: Function Disable implies Data Bus in high impedance state and not writing.
2: CS* = ($\overline{CE}_1 = 0$) • ($CE_2 = 1$) • ($\overline{CS} = 0$)
CS* = 1 signifies all chip enables and chip select active

Table 2.
Truth Table for
Control and Data Bus Pin Status

(CS*)	$\overline{RD}$	$\overline{WR}$	AD_{0-7} During Data Portion of Cycle	8185 Function
0	X	X	Hi-Impedance	No Function
1	0	1	Data from Memory	Read
1	1	0	Data to Memory	Write
1	1	1	Hi-Impedance	Reading, but not Driving Data Bus

NOTE:
X: Don't Care.

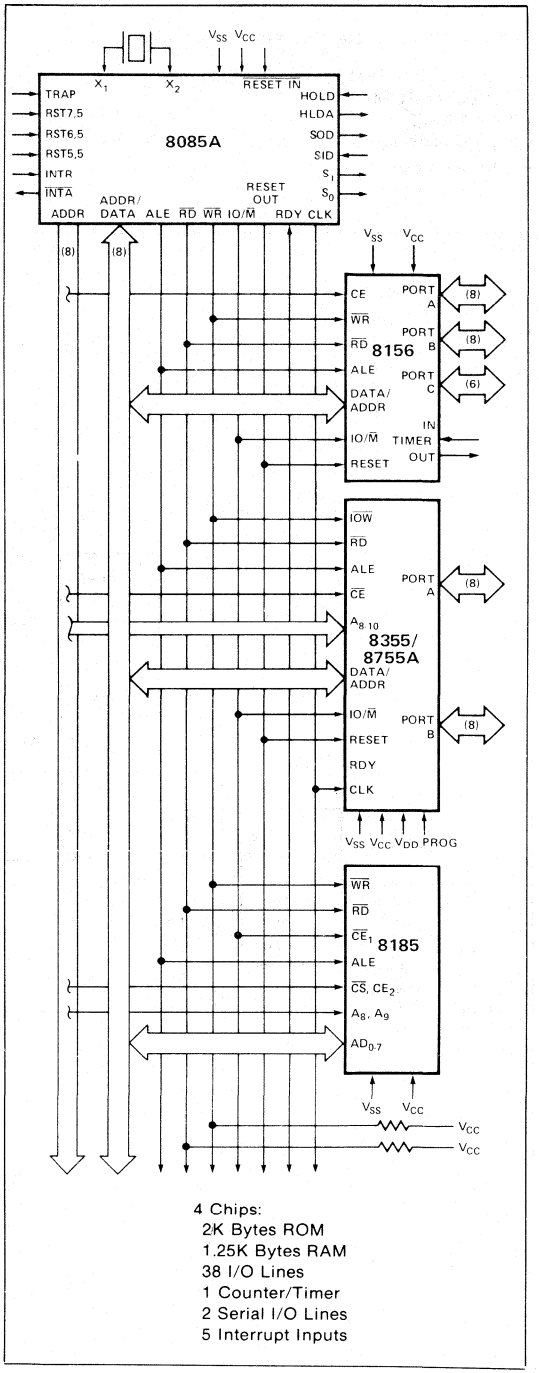

Figure 3. I8185 in an MCS-85® System

8088 FIVE CHIP SYSTEM

Figure 4 shows a five chip system containing:

- 1.25 K Bytes RAM
- 2 K Bytes ROM
- 38 I/O Pins
- 1 Interval Time
- 2 Interrupt Levels

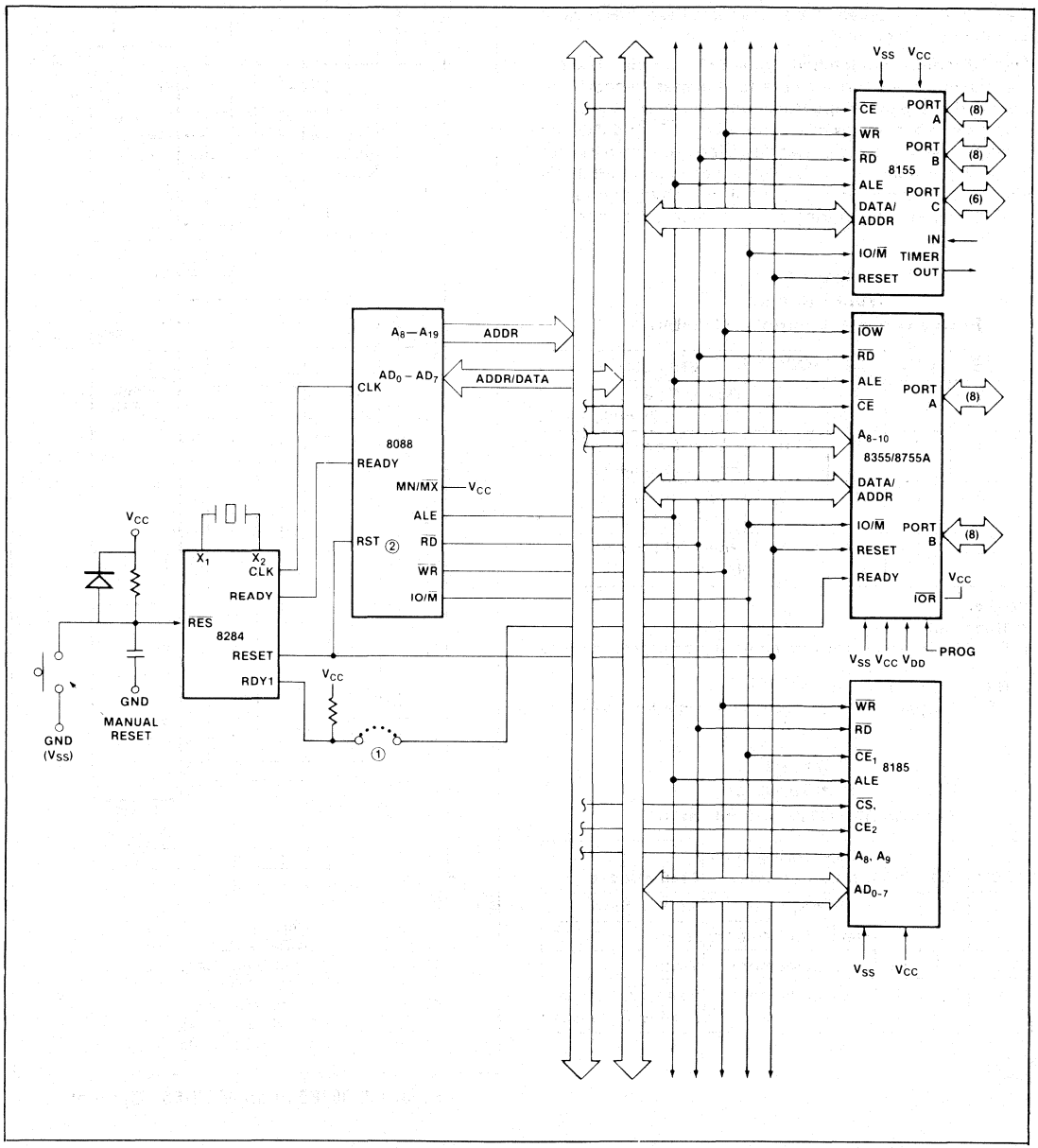

Figure 4. 8088 Five Chip System Configuration

ABSOLUTE MAXIMUM RATINGS*

Temperature Under Bias ..... −40°C to +85°C
Storage Temperature ..... -65°C to +150°C
Voltage on Any Pin
with Respect to Ground ..... -0.5V to +7V
Power Dissipation 1.5W

**NOTICE: Stresses above those listed under "Absolute Maximum Ratings" may cause permanent damage to the device. This is a stress rating only and functional operation of the device at these or any other conditions above those indicated in the operational sections of this specification is not implied. Exposure to absolute maximum rating condtions for extended periods may affect device reliability.*

D.C. CHARACTERISTICS (T_A = 0°C to 70°C, V_{CC} = 5V ± 5%)

Symbol	Parameter	Min.	Max.	Units	Test Conditions
V_{IL}	Input Low Voltage	-0.5	0.8	V	
V_{IH}	Input High Voltage	2.0	V_{CC}+0.5	V	
V_{OL}	Output Low Voltage		0.45	V	I_{OL} = 1.6 mA
V_{OH}	Output High Voltage	2.4			I_{OH} = 400μA
I_{IL}	Input Leakage		±10	μA	V_{IN} = V_{CC} to 0V
I_{LO}	Output Leakage Current		±10	μA	0.45V ≤ V_{OUT} ≤ V_{CC}
I_{CC}	V_{CC} Supply Current Powered Up		125	mA	
	Powered Down		40	mA	

A.C. CHARACTERISTICS (T_A = −40°C to +85°C, V_{CC} = 5V ± 5%)

Symbol	Parameter[1]	8185 Preliminary		Units
		Min.	Max.	
t_{AL}	Address to Latch Set Up Time	50		ns
t_{LA}	Address Hold Time after Latch	80		ns
t_{LC}	Latch to READ/WRITE Control	100		ns
t_{RD}	Valid Data Out Delay from READ Control		170	ns
t_{LD}	ALE to Data Out Valid		300	ns
t_{LL}	Latch Enable Width	100		ns
t_{RDF}	Data Bus Float after READ	0	100	ns
t_{CL}	READ/WRITE Control to Latch Enable	20		ns
t_{CC}	READ/WRITE Control Width	250		ns
t_{DW}	Data In to Write Set Up Time	150		ns
t_{WD}	Data In Hold Time after WRITE	20		ns
t_{SC}	Chip Select Set Up to Control Line	10		ns
t_{CS}	Chip Select Hold Time after Control	10		ns
t_{ALCE}	Chip Enable Set Up to ALE Falling	30		ns
t_{LACE}	Chip Enable Hold Time after ALE	50		ns

NOTES:
1. All A.C. parameters are referenced at
   a) 2.4V and .45V for inputs
   b) 2.0V and .8V for outputs.

A.C. TESTING INPUT, OUTPUT WAVEFORM

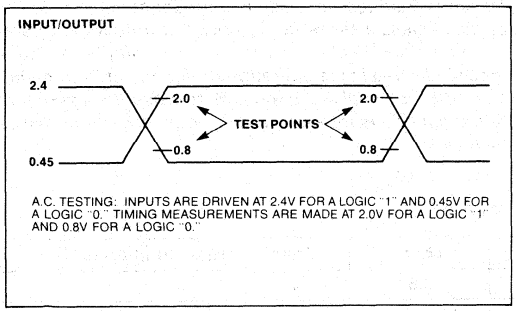

A.C. TESTING LOAD CIRCUIT

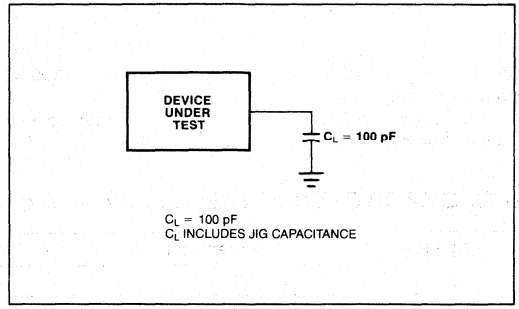

WAVEFORMS

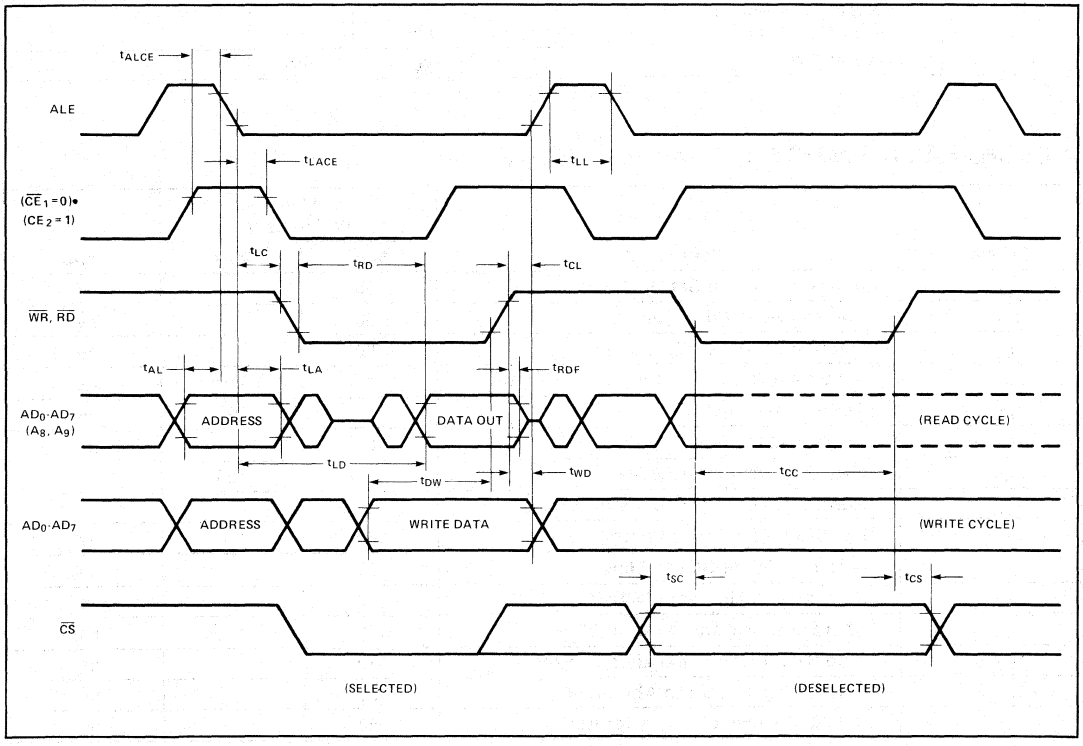

I8212
8-BIT INPUT/OUTPUT PORT
INDUSTRIAL

- **Fully Parallel 8-Bit Data Register and Buffer**
- **Service Request Flip-Flop for Interrupt Generation**
- **Low Input Load Current — .25mA Max**
- **Three State Outputs**
- **Outputs Sink 15mA**
- **3.65V Output High Voltage for Direct Interface to ID8085A CPU**
- **Asynchronous Register Clear**
- **Replaces Buffers, Latches and Multiplexers in Microcomputer Systems**
- **Industrial Temperature Range: −40°C to +85°C**

The I8212 input/output port consists of an 8-bit latch with 3-state output buffers along with control and device selection logic. Also included is a service request flip-flop for the generation and control of interrupts to the microprocessor.

The device is multimode in nature. It can be used to implement latches, gated buffers or multiplexers. Thus, all of the principal peripheral and input/output functions of a microcomputer system can be implemented with this device.

Note: The specifications for the 3212 are identical with those for the 8212.

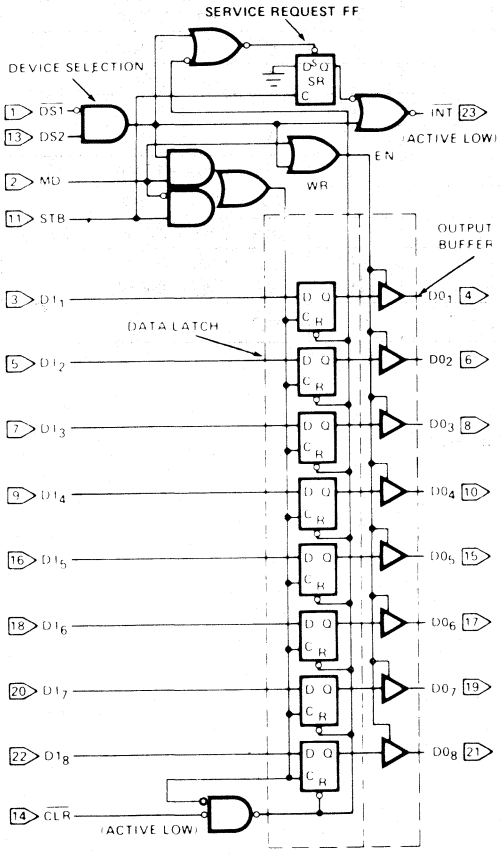

Figure 1. Logic Diagram

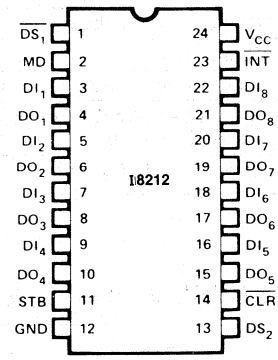

DI_1-DI_8	DATA IN
DO_1-DO_8	DATA OUT
$\overline{DS_1}$-DS_2	DEVICE SELECT
MD	MODE
STB	STROBE
$\overline{INT}$	INTERRUPT (ACTIVE LOW)
$\overline{CLR}$	CLEAR (ACTIVE LOW)

Figure 2. Pin Configuration

ABSOLUTE MAXIMUM RATINGS*

Temperature Under Bias Plastic ..... – 40°C to 85°C
Storage Temperature ..... -65°C to +160°C
All Output or Supply Voltages ..... -0.5 to +7 Volts
Ali Input Voltages ..... -1.0 to 5.5 Volts
Output Currents 100mA

**NOTICE: Stresses above those listed under "Absolute Maximum Ratings" may cause permanent damage to the device. This is a stress rating only and functional operation of the device at these or any other conditions above those indicated in the operational sections of this specification is not implied. Exposure to absolute maximum rating conditions for extended periods may affect device reliability.*

D.C. CHARACTERISTICS (T_A = −40°C to 85°C, V_{CC} = +5V ±5%)

Symbol	Parameter	Limits			Unit	Test Conditions
		Min.	Typ.	Max.		
I_F	Input Load Current, ACK, DS_2, CR, DI_1-DI_8 Inputs			-.25	mA	V_F = .45V
I_F	Input Load Current MD Input			-.75	mA	V_F = .45V
I_F	Input Load Current DS_1 Input			-1.0	mA	V_F = .45V
I_R	Input Leakage Current, ACK, DS, CR, DI_1-DI_8 Inputs			10	μA	$V_R \leq V_{CC}$
I_R	Input Leakage Current MO Input			30	μA	$V_R \leq V_{CC}$
I_R	Input Leakage Current DS_1 Input			40	μA	$V_R \leq V_{CC}$
V_C	Input Forward Voltage Clamp			-1	V	I_C = -5mA
V_{IL}	Input "Low" Voltage			0.85	V	
V_{IH}	Input "High" Voltage	2.0			V	
V_{OL}	Output "Low" Voltage			0.45	V	I_{OL} = 15mA
V_{OH}	Output "High" Voltage	3.65	4.0		V	I_{OH} = -1mA
I_{SC}	Short Circuit Output Current	-15		-75	mA	V_O = 0V, V_{CC} = 5V
$\|I_O\|$	Output Leakage Current High Impedance State			−20 20	μA μA	V_O = .45V V_O = 5.25V
I_{CC}	Power Supply Current		90	130	mA	

CAPACITANCE* (F = 1 MHz, V_{BIAS} = 2.5V, V_{CC} = +5V, T_A =25°C)

Symbol	Test	Limits	
		Typ.	Max.
C_{IN}	DS_1 MD Input Capacitance	9pF	15 pF
C_{IN}	DS_2, CK, ACK, DI_1-DI_8 Input Capacitance	5pF	10 pF
C_{OUT}	DO_1-DO_8 Output Capacitance	8pF	15 pF

*This parameter is sampled and not 100% tested.

A.C. CHARACTERISTICS (T_A = −40°C to 85°C, V_{CC} = +5V ±5%)

Symbol	Parameter	Limits			Unit	Test Conditions
		Min.	Typ.	Max.		
t_{PW}	Pulse Width	30			ns	
t_{PD}	Data to Output Delay			30	ns	Note 1
t_{WE}	Write Enable to Output Delay			40	ns	Note 1
t_{SET}	Data Set Up Time	15			ns	
t_H	Data Hold Time	20			ns	
t_R	Reset to Output Delay			40	ns	Note 1
t_S	Set to Output Delay			30	ns	Note 1
t_E	Output Enable/Disable Time			45	ns	Note 1
t_C	Clear to Output Delay			55	ns	Note 1

SWITCHING CHARACTERISTICS

Conditions of Test

Input Pulse Amplitude = 2.5V
Input Rise and Fall Times 5ns
Between 1V and 2V Measurements made at 1.5V
with 15mA and 30pF Test Load

Note 1:

Test	C_L*	R_1	R_2
t_{PD}, t_{WE}, t_R, t_S, t_C	30pF	300Ω	600Ω
t_E, ENABLE↑	30pF	10KΩ	1KΩ
t_E, ENABLE ↓	30pF	300Ω	600Ω
t_E, DISABLE↑	5pF	300Ω	600Ω
t_E, DISABLE↓	5pF	10KΩ	1KΩ

*Includes probe and jig capacitance.

A.C. TESTING LOAD CIRCUIT

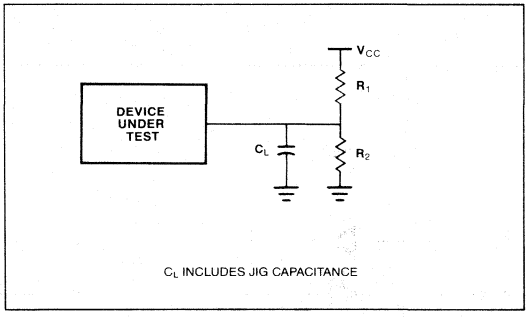

I8216/I8226
4-BIT PARALLEL BIDIRECTIONAL BUS DRIVER

INDUSTRIAL

- **Data Bus Buffer Driver**
- **Low Input Load Current — .25 mA Maximum**
- **High Output Drive Capability for Driving System Data Bus**
- **3.65V Output High Voltage**
- **Three State Outputs**
- **Reduces System Package Count**
- **Industrial Temperature Range: −40° to +85°C**

The I8216/I8226 is a 4-bit bidirectional bus driver/receiver.

All inputs are low power TTL compatible. For driving MOS, the DO outputs provide a high 3.65V V_{OH}, and for high capacitance terminated bus structures, the DB outputs provide a high 50mA I_{OL} capability.

A non-inverting (I8216) and an inverting (I8226) are available to meet a wide variety of applications for buffering in microcomputer systems.

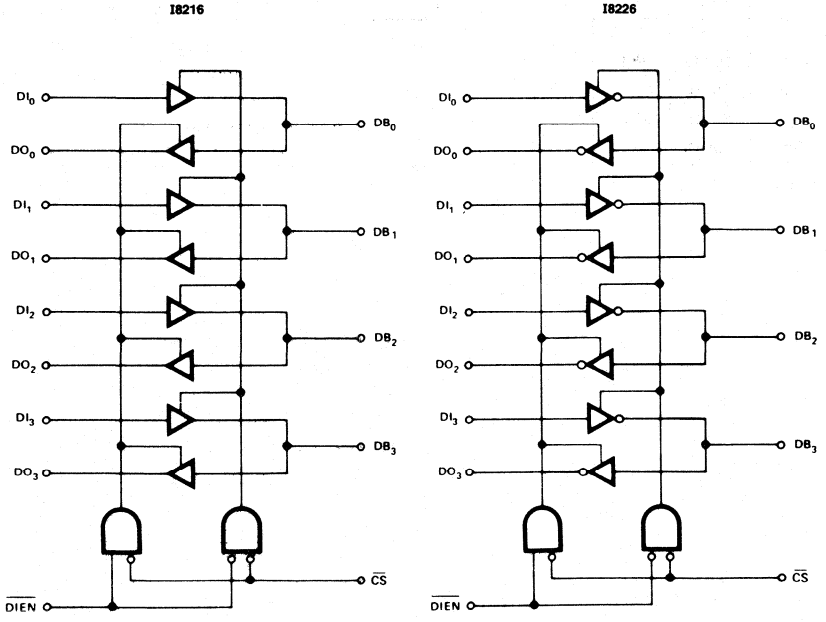

Figure 1. Logic Diagrams

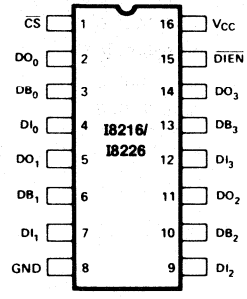

DB_0-DB_3	DATA BUS BI-DIRECTIONAL
DI_0-DI_3	DATA INPUT
$\overline{DO_0}$-$\overline{DO_3}$	DATA OUTPUT
$\overline{DIEN}$	DATA IN ENABLE DIRECTION CONTROL
$\overline{CS}$	CHIP SELECT

Figure 2. Pin Configuration

ABSOLUTE MAXIMUM RATINGS*

Temperature Under Bias . . . . . – 40°C to 85°C
Storage Temperature . . . . . – 65°C to + 150°C
All Output and Supply Voltages . . . . . – 0.5V to + 7V
All Input Voltages . . . . . – 1.0V to + 5.5V
Output Currents . . . . . 125 mA

NOTICE: Stresses above those listed under "Absolute Maximum Ratings" may cause permanent damage to the device. This is a stress rating only and functional operation of the device at these or any other conditions above those indicated in the operational sections of this specification is not implied. Exposure to absolute maximum rating conditions for extended periods may affect device reliability.

D.C. CHARACTERISTICS (T_A = −40°C to 85°C, V_{CC} = +5V ±10%)

Symbol	Parameter		Limits Min.	Typ.	Max.	Unit	Conditions
I_{F1}	Input Load Current $\overline{DIEN}$, $\overline{CS}$			-0.15	-.5	mA	V_F = 0.45
I_{F2}	Input Load Current All Other Inputs			-0.08	-.25	mA	V_F = 0.45
I_{R1}	Input Leakage Current $\overline{DIEN}$, $\overline{CS}$				20	μA	V_R = 5.25V
I_{R2}	Input Leakage Current DI Inputs				10	μA	V_R = 5.25V
V_C	Input Forward Voltage Clamp				-1	V	I_C = -5mA
V_{IL}	Input "Low" Voltage				.95	V	
V_{IH}	Input "High" Voltage		2.0			V	
$\|I_O\|$	Output Leakage Current (3-State)	DO DB			20 100	μA	V_O = 0.45V/5.25V
I_{CC}	Power Supply Current	8216		95	130	mA	
		8226		85	120	mA	
V_{OL1}	Output "Low" Voltage DO, DB Outputs			0.3	.45	V	DO Outputs I_{OL}=15mA DB Outputs I_{OL}=25mA
V_{OL2}	Output "Low" Voltage DB Outputs Only	8216		0.5	.6	V	DB Outputs I_{OL} = 50mA
		8226		0.5	.6	V	DB Outputs I_{OL} = 45mA
V_{OH1}	Output "High" Voltage	DO Outputs	3.65	4.0		V	DO Outputs I_{OH} = -1mA
V_{OH2}	Output "High" Voltage	DB Outputs	2.4	3.0		V	DB Outputs I_{OH} = -10mA
I_{OS}	Output Short Circuit Current		-15 -30	-35 -75	-65 -120	mA mA	DO Outputs $V_O \cong 0V$, DB Outputs V_{CC}=5.0V

NOTE: Typical values are for T_A = 25°C, V_{CC} = 5.0V.

CAPACITANCE (V_{BIAS} = 2.5V, V_{CC} = 5.0V, T_A = 25°C)

Symbol	Parameter	Limits Min.	Typ.[1]	Max.	Unit
C_{IN}	Input Capacitance		4	8	pF
C_{OUT1}	Output Capacitance		6	10	pF
C_{OUT2}	Output Capacitance		13	20	pF

A.C. CHARACTERISTICS (T_A = −40°C to 85°C, V_{CC} = +5V ±10%)

Symbol	Parameter	Limits Min.	Typ.[1]	Max.	Unit	Conditions
T_{PD1}	Input to Output Delay DO Outputs		15	25	ns	C_L=30pF, R_1=300Ω R_2=600Ω
T_{PD2}	Input to Output Delay DB Outputs					
	8216		20	30	ns	C_L=300pF, R_1=90Ω
	8226		16	25	ns	R_2 = 180Ω
T_E	Output Enable Time					
	8216		45	65	ns	(Note 2)
	8226		36	54	ns	(Note 2)
T_D	Output Disable Time		20	35	ns	(Note 2)

NOTES:

1. Typical values are for T_A = 25°C, V_{CC} = 5.0V.
2.

TEST	C_L	R_1	R_2
T_{PD1}	30 pF	300Ω	600Ω
T_{PD2}	300 pF	90Ω	180Ω
T_{E} (DO, ENABLE↑)	30 pF	10KΩ	1KΩ
T_{E} (DO, ENABLE↓)	30 pF	300Ω	600Ω
T_{E} (DB, ENABLE↑)	300 pF	10KΩ	1KΩ
T_{E} (DB, ENABLE↓)	300 pF	90Ω	180Ω
T_{D} (DO, DISABLE↑)	5 pF	300Ω	600Ω
T_{D} (DO, DISABLE↓)	5 pF	10KΩ	1KΩ
T_{D} (DB, DISABLE↑)	5 pF	90Ω	180Ω
T_{D} (DB, DISABLE↓)	5 pF	10KΩ	1KΩ

TEST CONDITIONS:

Input pulse amplitude of 2.5V.
Input rise and fall times of 5 ns between 1 and 2 volts.
Output loading is 5 mA and 10 pF.
Speed measurements are made at 1.5 volt levels.

A.C. TESTING LOAD CIRCUIT

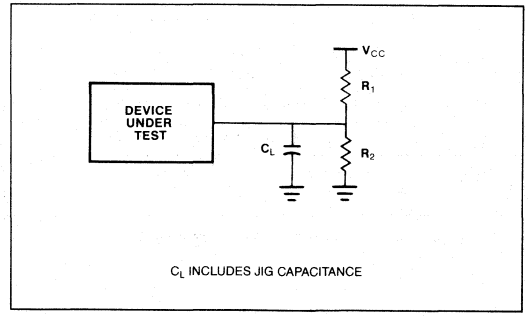

I8259A
PROGRAMMABLE INTERRUPT CONTROLLER

INDUSTRIAL

- **iAPX 86 Compatible**
- **MCS-80®, 85® Compatible**
- **Eight-Level Priority Controller**
- **Expandable to 64 Levels**
- **Programmable Interrupt Modes**
- **Individual Request Mask Capability**
- **Single +5V Supply (No Clocks)**
- **Industrial Temperature Range: −40°C to +85°C**

The Intel® I8259A Programmable Interrupt Controller handles up to eight vectored priority interrupts for the CPU. It is cascadable for up to 64 vectored priority interrupts without additional circuitry. It is packaged in a 28-pin DIP, uses NMOS technology and requires a single +5V supply. Circuitry is static, requiring no clock input.

The I8259A is designed to minimize the software and real time overhead in handling multi-level priority interrupts. It has several modes, permitting optimization for a variety of system requirements.

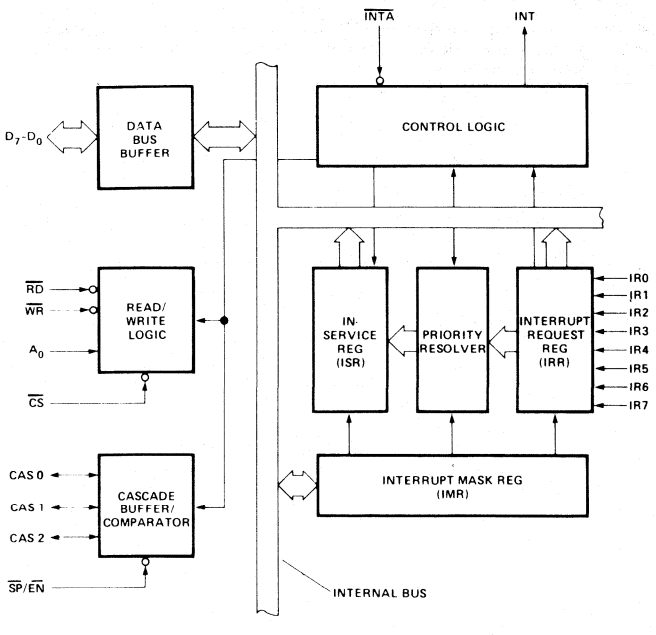

Figure 1. Block Diagram

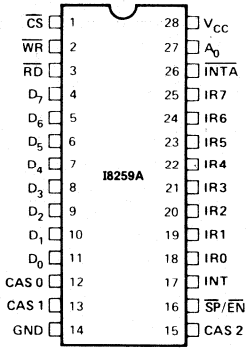

Figure 2. Pin Configuration

$D_7 - D_0$	DATA BUS (BI-DIRECTIONAL)
$\overline{RD}$	READ INPUT
$\overline{WR}$	WRITE INPUT
A_0	COMMAND SELECT ADDRESS
$\overline{CS}$	CHIP SELECT
CAS2- CAS0	CASCADE LINES
$\overline{SP}/\overline{EN}$	SLAVE PROGRAM INPUT/ENABLE
INT	INTERRUPT OUTPUT
$\overline{INTA}$	INTERRUPT ACKNOWLEDGE INPUT
IR0 - IR7	INTERRUPT REQUEST INPUTS

Table 1. Pin Descriptions

Symbol	Pin No.	Type	Name and Function
V_{CC}	28		**Voltage:** +5V supply.
GND	14		**Ground:** Ground.
D_{0-7}	11-4	I/O	**Data Bus:** Bidirectional data bus, used for: a) programming the mode of the 8259A (programming is done by software); b) the microprocessor can read the status of the 8259A; c) the 8259A will send vectoring data to the microprocessor when an interrupt is acknowledged.
IR_{0-7}	18-25	I	**Interrupt Requests:** These are asynchronous inputs. A positive-going edge will generate an interrupt request. Thus a request can be generated by raising the line and holding it high until acknowledged, or by a negative pulse. In level triggered mode, no edge is required. These lines are active HIGH.
$\overline{RD}$	3	I	**Read:** (generally from 8228 in MCS-80 system or from 8086 in MCS-86 system).
$\overline{WR}$	2	I	**Write:** (generally from 8288 in MCS-80 system or from 8086 in MCS-86 system).
$\overline{INTA}$	26	I	**Interrupt Acknowledge:** (generally from 8228 in MCS-80 system, 8086 in MCS-86 system). The 8288 generates three distinct $\overline{INTA}$ pulses whan a CALL is inserted, the 8086 produces two distinct $\overline{INTA}$ pulses during an interrupt cycle.
$\overline{CS}$	1	I	**Chip Select:** $\overline{RD}$ and $\overline{WR}$ are enabled by Chip Select, whereas Interrupt Acknowledge is independent of Chip Select.
A0	27	I	**Address:** Usually the least significant bit of the microprocessor address output. When A0=1 the Interrupt Mask Register can be loaded or read. When A0=0 the 8259A mode can be programmed or its status can be read. $\overline{CS}$ is active LOW.
INT	17	O	**Interrupt:** Goes directly to the microprocessor interrupt input. This output will have high V_{OH} to match the 8080 3.3V V_{IH}. INT is active HIGH.
C0-C2	12 13 15	I/O	**Cascade Lines:** Three cascade lines, outputs in master mode and inputs in slave. Mode The master issues the binary code of the acknowledged interrupt level on these lines. Each slave compares this code with its own.
$\overline{SP}/\overline{EN}$	16	I/O	**$\overline{SP}/\overline{EN}$:** A dual function pin. In the buffered mode $\overline{SP}/\overline{EN}$ is used to enable bus transceivers ($\overline{EN}$). In the non-buffered mode $\overline{SP}/\overline{EN}$ determines if this 8259A is a master or a slave. If $\overline{SP}$=1 the 8259A is master; $\overline{SP}$=0 indicates a slave.

ABSOLUTE MAXIMUM RATINGS*

Ambient Temperature Under Bias ..... -40°C to 85°C
Storage Temperature ..... −65°C to +150°C
Voltage On Any Pin
With Respect to Ground ..... −0.5V to +7V
Power Dissipation ..... 1 Watt

NOTICE: Stresses above those listed under "Absolute Maximum Ratings" may cause permanent damage to the device. This is a stress rating only and functional operation of the device at these or any other conditions above those indicated in the operational sections of this specification is not implied.

D.C. CHARACTERISTICS (T_A = −40°C to 85°C, V_{CC} = 5V ±10%)

Symbol	Parameter	Min.	Max.	Units	Test Conditions
V_{IL}	Input Low Voltage	−.5	.8	V	
V_{IH}	Input High Voltage	2.3	V_{CC} + .5V	V	
V_{OL}	Output Low Voltage		.45	V	I_{OL} = 2.2 mA
V_{OH}	Output High Voltage	2.4		V	I_{OH} = −400 μA
$V_{OH(INT)}$	Interrupt Output High Voltage	3.5 2.4		V V	I_{OH} = −100 μA I_{OH} = −400 μA
I_{LI}	Input Load Current	−10	+10	μA	V_{IN} = V_{CC} to 0V
I_{LOL}	Output Leakage Current	−10	+10	μA	V_{OUT} = 0.45V
I_{LOH}	Output Leakage Current		10	μA	V_{OUT} = V_{CC}
I_{CC}	V_{CC} Supply Current		85	mA	

CAPACITANCE (T_A = 25°C, V_{CC} = GND = 0V)

Symbol	Parameter	Min.	Typ.	Max.	Unit	Test Conditions
C_{IN}	Input Capacitance			10	pF	fc = 1 MHz
$C_{I/O}$	I/O Capacitance			20	pF	Unmeasured pins returned to V_{SS}

A.C. CHARACTERISTICS (T_A = −40°C to 85°C, V_{CC} = 5V ±10%)

TIMING REQUIREMENTS

Symbol	Parameter	Min.	Max.	Units	Test Conditions
TAHRL	A0/$\overline{CS}$ Setup to $\overline{RD}$/$\overline{INTA}$↓	0		ns	
TRHAX	A0/$\overline{CS}$ Hold after $\overline{RD}$/$\overline{INTA}$↑	0		ns	
TRLRH	$\overline{RD}$ Pulse Width	235		ns	
TAHWL	A0/$\overline{CS}$ Setup to $\overline{WR}$↓	0		ns	
TWHAX	A0/$\overline{CS}$ Hold after $\overline{WR}$↑	0		ns	
TWLWH	$\overline{WR}$ Pulse Width	290		ns	
TDVWH	Data Setup to $\overline{WR}$↑	240		ns	
TWHDX	Data Hold after $\overline{WR}$↑	0		ns	
TJLJH	Interrupt Request Width (Low)	100		ns	See Note 1
TCVIAL	Cascade Setup to Second or Third $\overline{INTA}$↓ (Slave Only)	55		ns	
TRHRL	End of $\overline{RD}$ to next $\overline{RD}$ End of $\overline{INTA}$ to next $\overline{INTA}$ within an INTA sequence only	160		ns	
TWHWL	End of $\overline{WR}$ to next $\overline{WR}$	190		ns	

A.C. CHARACTERISTICS (Continued)

TIMING REQUIREMENTS

Symbol	Parameter	Min.	Max.	Units	Test Conditions
*TCHCL	End of Command to next Command (Not same command type)	500		ns	
	End of $\overline{INTA}$ sequence to next $\overline{INTA}$ sequence.				

*Worst case timing for TCHCL in an actual microprocessor system is typically much greater than 500 ns (i.e. 8085A = 1.6 μs, 8085A-2 = 1 μs, 8086 = 1 μs, 8086-2 = 625 ns)

TIMING RESPONSES

Symbol	Parameter	Min.	Max.	Units	Test Conditions
TRLDV	Data Valid from $\overline{RD}$/$\overline{INTA}$↓		200	ns	C of Data Bus Max. test C = 100 pF Min. test C = 15 pF C_{INT} = 100 pF C_{ENABLE} = 15 pF
TRHDZ	Data Float after $\overline{RD}$/$\overline{INTA}$↑	10	100	ns	
TJHIH	Interrupt Output Delay		350	ns	
TIALCV	Cascade Valid from First $\overline{INTA}$↓ (Master Only)		565	ns	
TRLEL	Enable Active from $\overline{RD}$↓ or $\overline{INTA}$↓		125	ns	
TRHEH	Enable Inactive from $\overline{RD}$↑ or $\overline{INTA}$↑		150	ns	
TAHDV	Data Valid from Stable Address		200	ns	
TCVDV	Cascade Valid to Valid Data		300	ns	

NOTE:
1. This is the low time required to clear the input latch in the edge triggered mode.

A.C. TESTING INPUT, OUTPUT WAVEFORM

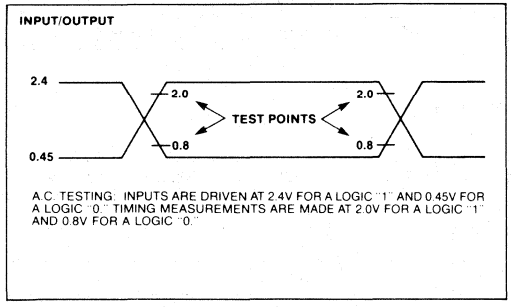

A.C. TESTING LOAD CIRCUIT

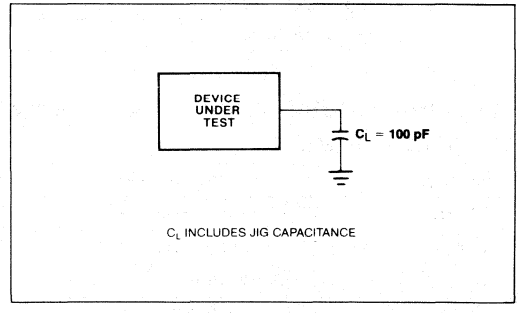

WAVEFORMS

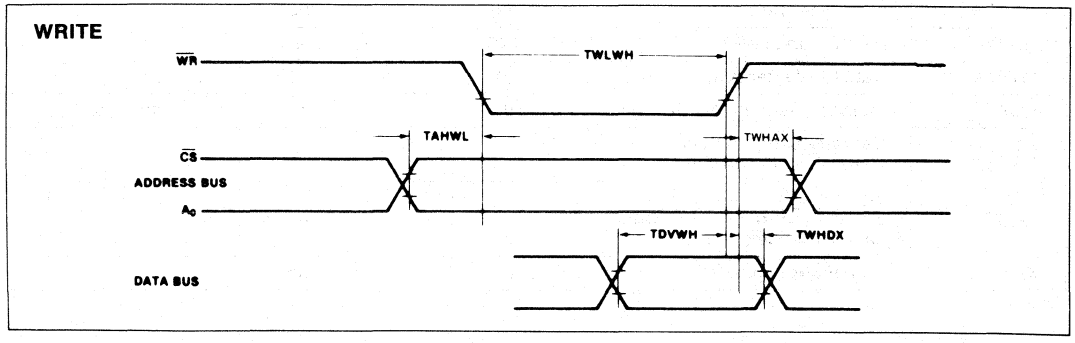

WAVEFORMS (Continued)

READ/INTA MODE

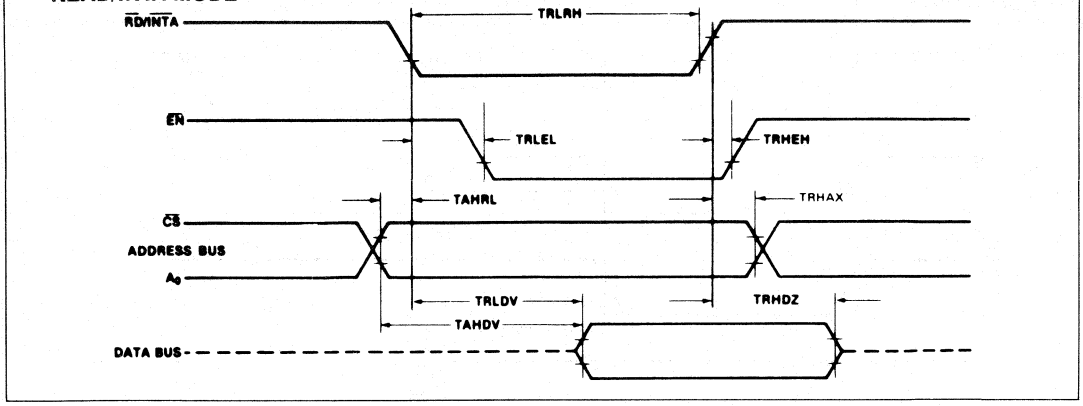

INTA SEQUENCE

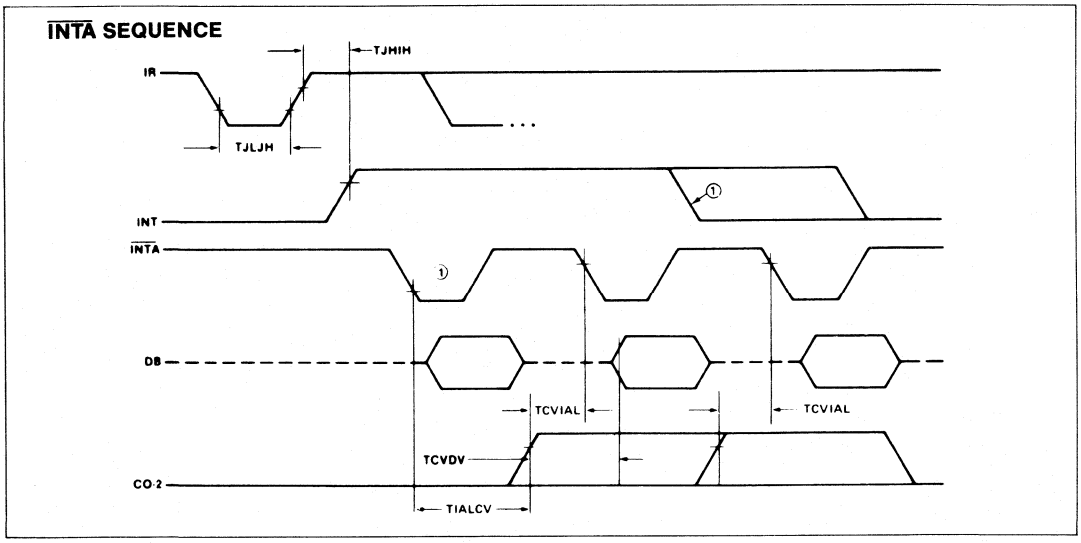

NOTES: Interrupt output must remain HIGH at least until leading edge of first INTA.
1. Cycle 1 in iAPX 86, iAPX 88 systems, the Data Bus is not active.

WAVEFORMS (Continued)

OTHER TIMING

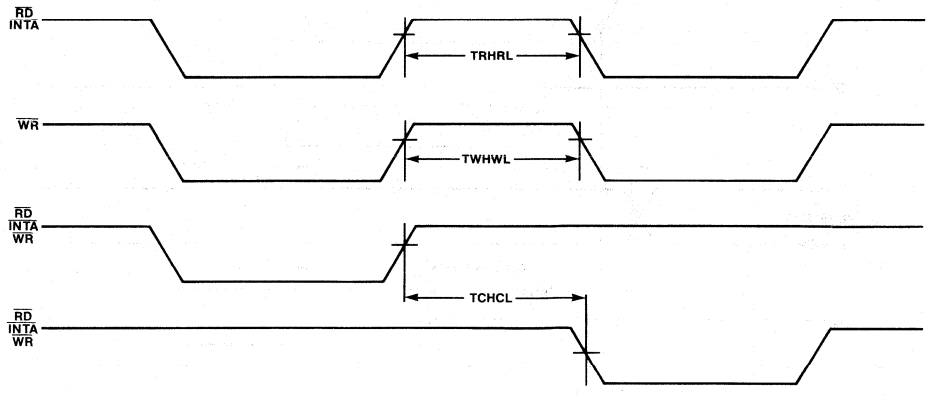

I8282/8283
OCTAL LATCH
INDUSTRIAL

- **Fully Parallel 8-Bit Data Register and Buffer**
- **Transparent during Active Strobe**
- **Address Latch for iAPX 86, 88, MCS-80®, MCS-85®, MCS-48® Families**
- **High Output Drive Capability for Driving System Data Bus**
- **3-State Outputs**
- **20-Pin Package with 0.3" Center**
- **No Output Low Noise when Entering or Leaving High Impedance State**
- **Industrial Temperature Range: −40° to +85°C**

The I8282 and I8283 are 8-bit bipolar latches with 3-state output buffers. They can be used to implement latches, buffers, or multiplexers. The I8283 inverts the input data at its outputs while the I8282 does not. Thus, all of the principal peripheral and input/output functions of a microcomputer system can be implemented with these devices.

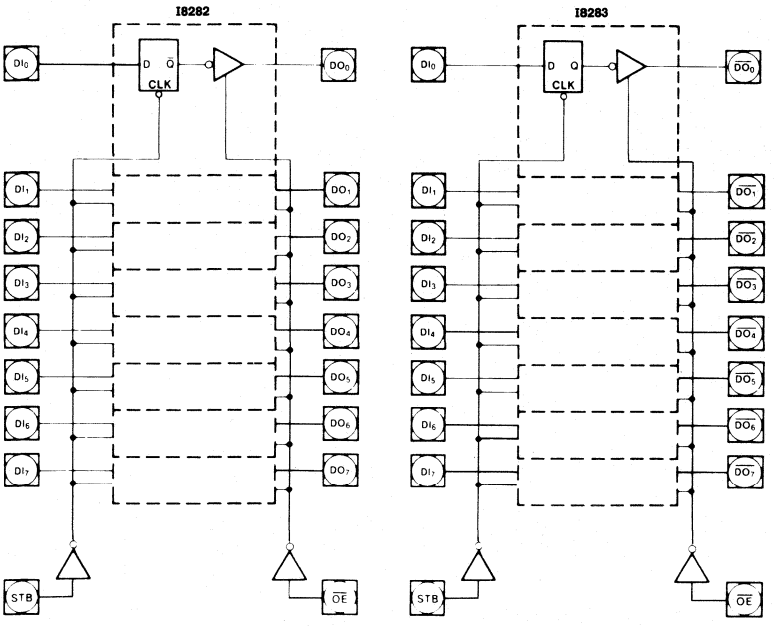

Figure 1. Logic Diagrams

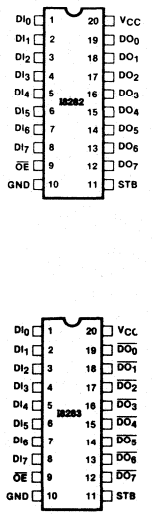

Figure 2. Pin Configurations

Table 1. Pin Description

Symbol	Type	Name and Function
STB	I	**Strobe:** STB is an input control pulse used to strobe data at the input pins (A_0–A_7) into the data latches. This signal is active HIGH to admit input data. The data is latched at the HIGH to LOW transition of STB.
$\overline{OE}$	I	**Output Enable:** $\overline{OE}$ is an input control signal which when active LOW enables the contents of the data latches onto the data output pin (B_0-B_7). $\overline{OE}$ being inactive HIGH forces the output buffers to their high impedance state.
DI_0–DI_7	I	**Data Input Pins:** Data presented at these pins satisfying setup time requirements when STB is strobed is latched into the data input latches.
DO_0-DO_7 (I8282) $\overline{DO_0}$-$\overline{DO_7}$ (I8283)	O	**Data Output Pins:** When $\overline{OE}$ is true, the data in the data latches is presented as inverted (I8283) or non-inverted (I8282) data onto the data output pins.

FUNCTIONAL DESCRIPTION

The I8282 and I8283 octal latches are 8-bit latches with 3-state output buffers. Data having satisfied the setup time requirements is latched into the data latches by strobing the STB line HIGH to LOW. Holding the STB line in its active HIGH state makes the latches appear transparent. Data is presented to the data output pins by activating the $\overline{OE}$ input line. When $\overline{OE}$ is inactive HIGH the output buffers are in their high impedance state. Enabling or disabling the output buffers will not cause negative-going transients to appear on the data output bus.

ABSOLUTE MAXIMUM RATINGS*

Temperature Under Bias ..... −40°C to +85°C
Storage Temperature ..... −65°C to +150°C
All Output and Supply Voltages ..... −0.5V to +7V
All Input Voltages ..... −1.0V to +5.5V
Power Dissipation ..... 1 Watt

NOTICE: Stresses above those listed under "Absolute Maximum Ratings" may cause permanent damage to the device. This is a stress rating only and functional operation of the device at these or any other conditions above those indicated in the operational sections of this specification is not implied. Exposure to absolute maximum rating conditions for extended periods may affect device reliability.

D.C. CHARACTERISTICS (V_{CC} = 5V ±10%, T_A = −40°C to +85°C)

Symbol	Parameter	Min	Max	Units	Test Conditions
V_C	Input Clamp Voltage		−1	V	I_C = −5 mA
I_{CC}	Power Supply Current		160	mA	
I_F	Forward Input Current		−0.2	mA	V_F = 0.45V
I_R	Reverse Input Current		50	μA	V_R = 5.25V
V_{OL}	Output Low Voltage		.45	V	I_{OL} = 20 mA
V_{OH}	Output High Voltage	2.4		V	I_{OH} = −5 mA
I_{OFF}	Output Off Current		±50	μA	V_{OFF} = 0.45 to 5.25V
V_{IL}	Input Low Voltage		0.8	V	V_{CC} = 5.0V (See Note 1)
V_{IH}	Input High Voltage	2.0		V	V_{CC} = 5.0V (See Note 1)
C_{IN}	Input Capacitance		12	pF	F = 1 MHz V_{BIAS} = 2.5V, V_{CC} = 5V T_A = 25°C

A.C. CHARACTERISTICS (V_{CC} = 5V ±10%, T_A = −40°C to +85°C)

(Loading: Outputs — I_{OL} = 20 mA, I_{OH} = −5 mA, C_L = 300 pF)

Symbol	Parameter	Min	Max	Units	Test Conditions
TIVOV	Input to Output Delay				(See Note 2)
	—Inverting		25	ns	
	—Non-Inverting		35	ns	
TSHOV	STB to Output Delay				
	—Inverting		45	ns	
	—Non-Inverting		55	ns	
TEHOZ	Output Disable Time		25	ns	
TELOV	Output Enable Time	10	50	ns	
TIVSL	Input to STB Setup Time	0		ns	
TSLIX	Input to STB Hold Time	25		ns	
TSHSL	STB High Time	15		ns	
TILIH, TOLOH	Input, Output Rise Time		20	ns	From 0.8V to 2.0V
TIHIL, TOHOL	Input, Output Fall Time		12	ns	From 2.0V to 0.8V

NOTES:
1. Output Loading I_{OL} = 20 mA, I_{OH} = −5 mA, C_L = 300 pF.
2. See waveforms and test load circuit on following page.

A.C. TESTING INPUT, OUTPUT WAVEFORM

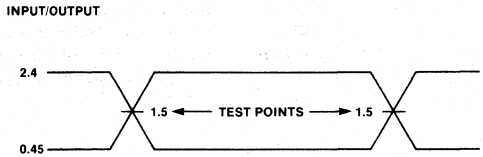

A.C. TESTING: INPUTS ARE DRIVEN AT 2.4V FOR A LOGIC "1" AND 0.45V FOR A LOGIC "0." TIMING MEASUREMENTS ARE MADE AT 1.5V FOR BOTH A LOGIC "1" AND "0."

A.C. TESTING LOAD CIRCUIT

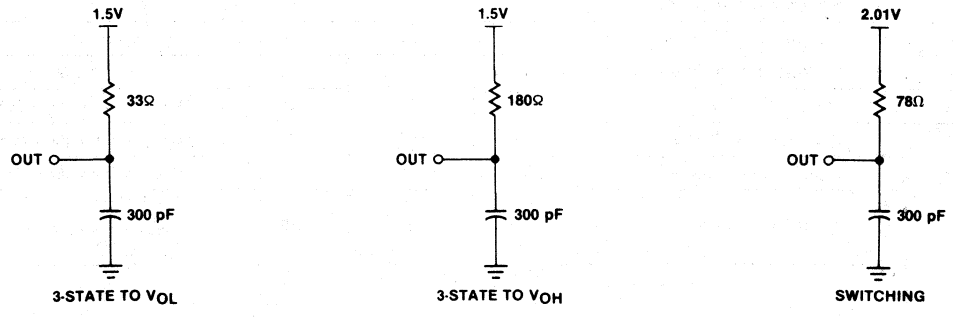

WAVEFORMS

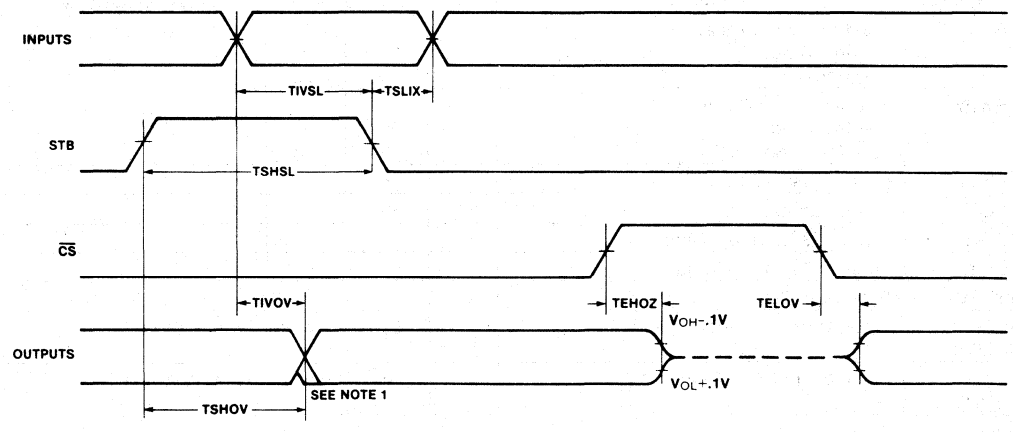

NOTE: 1. I8283 ONLY — OUTPUT MAY BE MOMENTARILY INVALID FOLLOWING THE HIGH GOING STB TRANSITION.
2. ALL TIMING MEASUREMENTS ARE MADE AT 1.5V UNLESS OTHERWISE NOTED.

I8284
CLOCK GENERATOR AND DRIVER FOR iAPX 86, 88 PROCESSORS
INDUSTRIAL

- **Industrial Temperature Range: −40°C to +85°C**
- **Generates the System Clock for the Industrial iAPX 86/10**
- **Uses a Crystal or a TTL Signal for Frequency Source**
- **Single +5V Power Supply**
- **18-Pin Package**
- **Generates System Reset Output from Schmitt Trigger Input**
- **Provides Local Ready and MULTIBUS™ Ready Synchronization**
- **Capable of Clock Synchronization with other 8284's**

The I8284 is a bipolar clock generator/driver designed to provide clock signals for the iAPX 86, 88 and peripherals. It also contains READY logic for operation with two MULTIBUS™ systems and provides the processors required READY synchronization and timing. Reset logic with hysteresis and synchronization is also provided.

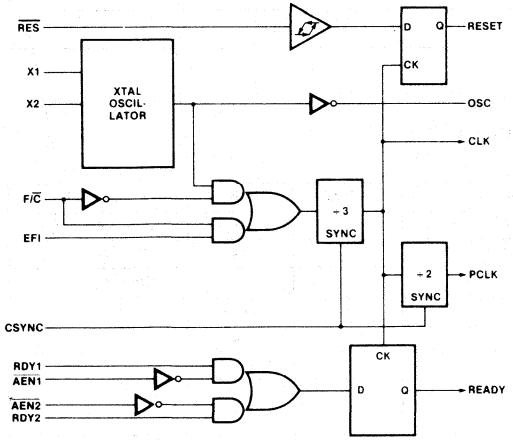

Figure 1. Block Diagram

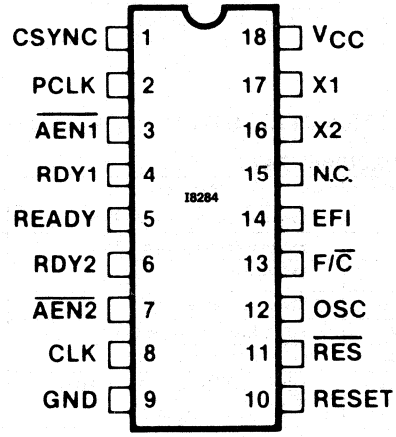

Figure 2. Pin Configuration

X1, X2	CONNECTIONS FOR CRYSTAL	RES	RESET INPUT
F/C	CLOCK SOURCE SELECT	RESET	SYNCHRONIZED RESET OUTPUT
EFI	EXTERNAL CLOCK INPUT	OSC	OSCILLATOR OUTPUT
CSYNC	CLOCK SYNCHRONIZATION INPUT	CLK	MOS CLOCK ID8086
RDY1, RDY2	READY SIGNAL FROM TWO MULTIBUS™ SYSTEMS	PCLK	TTL CLOCK FOR PERIPHERALS
AEN1, AEN2	ADDRESS ENABLED QUALIFIERS FOR RDY1,2	READY	SYNCHRONIZED READY OUTPUT
		VCC	+5 VOLTS
		GND	0 VOLTS

I8284 Pin Names

ABSOLUTE MAXIMUM RATINGS*

Temperature Under Bias ..... −40°C to 85°C
Storage Temperature ..... −65°C to +150°C
All Output and Supply Voltages..... −0.5V to +7V
All Input Voltages..... −1.0V to +5.5V
Power Dissipation..... 1 Watt

NOTICE: Stresses above those listed under "Absolute Maximum Ratings" may cause permanent damage to the device. This is a stress rating only and functional operation of the device at these or any other conditions above those indicated in the operation sections of this specification is not implied. Exposure to absolute maximum rating conditions for extended periods may affect device reliability.

D.C. CHARACTERISTICS (T_A = −40°C to 85°C, V_{CC} = 5V ±10%)

Symbol	Parameter	Min	Max	Units	Test Conditions
I_F	Forward Input Current		−0.5	mA	V_F = 0.45V
I_R	Reverse Input Current		50	μA	V_R = 5.25V
V_C	Input Forward Clamp Voltage		−1.0	V	I_C = −5 mA
I_{CC}	Power Supply Current		140	mA	
V_{IL}	Input LOW Voltage		0.8	V	V_{CC} = 5.0V
V_{IH}	Input HIGH Voltage	2.0		V	V_{CC} = 5.0V
V_{IH_R}	Reset Input HIGH Voltage	2.6		V	V_{CC} = 5.0V
V_{OL}	Output LOW Voltage		0.45	V	5 mA
V_{OH}	Output HIGH Voltage CLK Other Outputs	4 2.4		V V	−1 mA −1 mA
V_{IH_R}-V_{IL_R}	$\overline{RES}$ Input Hysteresis	0.25		V	V_{CC} = 5.0V

A.C. CHARACTERISTICS (T_A = −40°C to 85°C, V_{CC} = 5V ±10%)

TIMING REQUIREMENTS

Symbol	Parameter	Min	Max	Units	Test Conditions
TEHEL	External Frequency High Time	13		ns	90% - 90% V_{IN}
TELEH	External Frequency Low Time	13		ns	10% - 10% V_{IN}
TELEL	EFI Period	TEHEL + TELEH + δ		ns	(Note 1)
	XTAL Frequency	12	25	MHz	
TR1VCL	RDY1, RDY2 Set-Up to CLK	35		ns	
TCLR1X	RDY1, RDY2 Hold to CLK	0		ns	
TA1VR1V	$\overline{AEN1}$, $\overline{AEN2}$ Set-Up to RDY1, RDY2	15		ns	
TCLA1X	$\overline{AEN1}$, $\overline{AEN2}$ Hold to CLK	0		ns	
TYHEH	CSYNC Set-Up to EFI	20		ns	
TEHYL	CSYNC Hold to EFI	20		ns	
TYHYL	CSYNC Width	2·TELEL		ns	
TI1HCL	$\overline{RES}$ Set-Up to CLK	65		ns	(Note 2)
TCLI1H	$\overline{RES}$ Hold to CLK	20		ns	(Note 2)
TILIH	Input Rise Time		20	ns	From 0.8V to 2.0V
TIHIL	Input Fall Time		12	ns	From 2.0V to 0.8V

A.C. CHARACTERISTICS (Continued)

TIMING RESPONSES

Symbol	Parameter	Min.	Max.	Units	Test Conditions
TCLCL	CLK Cycle Period	125		ns	
TCHCL	CLK High Time	(⅓TCLCL)−2.0		ns	
TCLCH	CLK Low Time	(⅔TCLCL)−15.0		ns	
TCH1CH2 TCL2CL1	CLK Rise or Fall Time		10	ns	1.0V to 3.5V
TPHPL	PCLK High Time	TCLCL−20		ns	
TPLPH	PCLK Low Time	TCLCL−20		ns	
TRYLCL	Ready Inactive to CLK (See Note 4)	−8		ns	
TRYHCH	Ready Active to CLK (See Note 3)	(⅔TCLCL)−15.0		ns	
TCLIL	CLK to Reset Delay		40	ns	
TCLPH	CLK to PCLK High Delay		22	ns	
TCLPL	CLK to PCLK Low Delay		22	ns	
TOLCH	OSC to CLK High Delay	−5	12	ns	
TOLCL	OSC to CLK Low Delay	2	25	ns	
TOLOH	Output Rise Time (Except CLK)		20	ns	From 0.8V to 2.0V
TOHOL	Output Fall Time (Except CLK)		12	ns	From 2.0V to 0.8V

NOTES:
1. δ = EFI rise (5 ns max) + EFI fall (5 ns max).
2. Set up and hold only necessary to guarantee recognition at next clock.
3. Applies only to T3 and TW states.
4. Applies only to T2 states.

A.C. TESTING INPUT, OUTPUT WAVEFORM

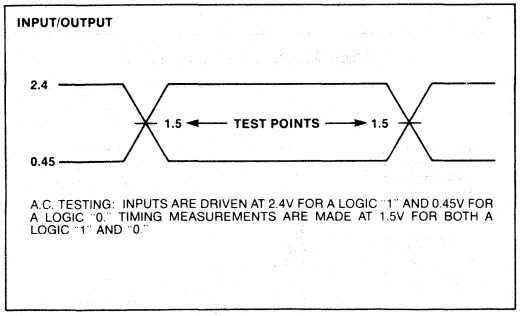

A.C. TESTING: INPUTS ARE DRIVEN AT 2.4V FOR A LOGIC "1" AND 0.45V FOR A LOGIC "0." TIMING MEASUREMENTS ARE MADE AT 1.5V FOR BOTH A LOGIC "1" AND "0."

A.C. TESTING LOAD CIRCUIT

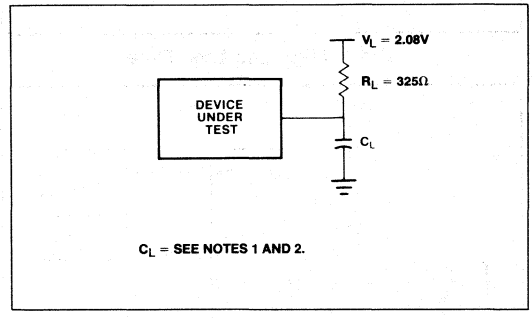

C_L = SEE NOTES 1 AND 2.

WAVEFORMS

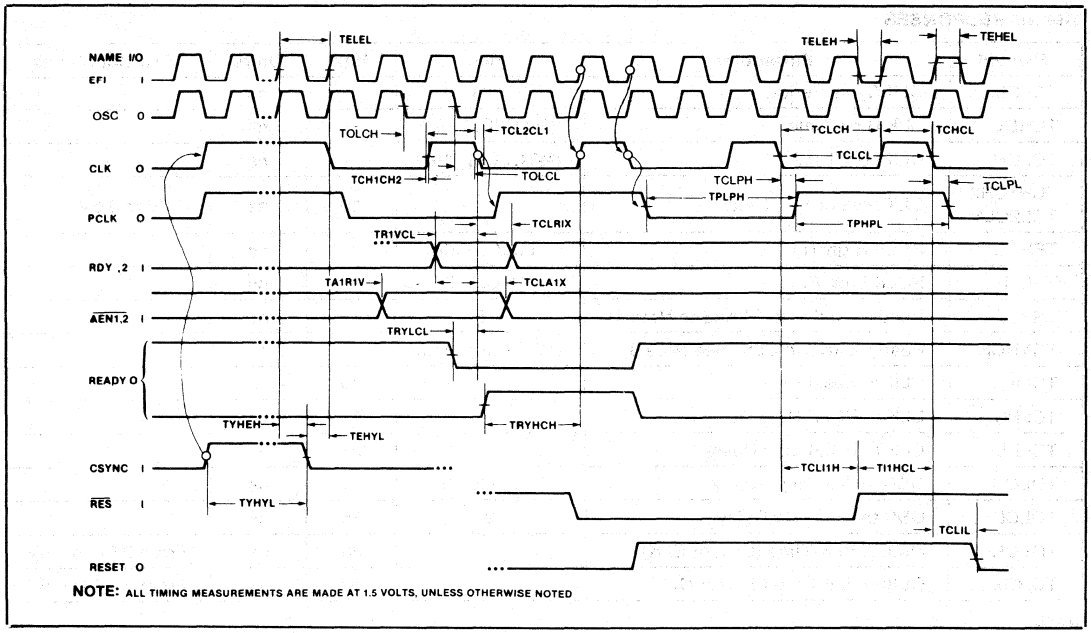

NOTE: ALL TIMING MEASUREMENTS ARE MADE AT 1.5 VOLTS, UNLESS OTHERWISE NOTED

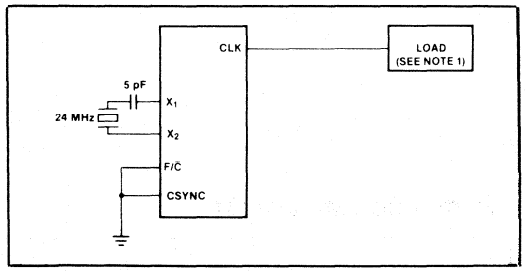

Clock High and Low Time

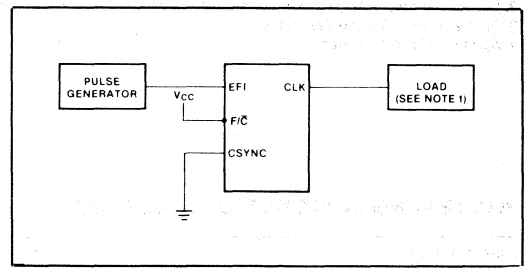

Clock High and Low Time

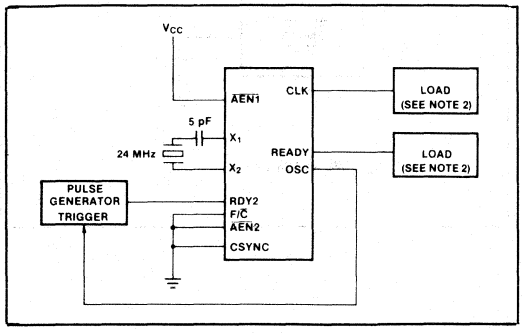

Ready to Clock (using X_1, X_2)

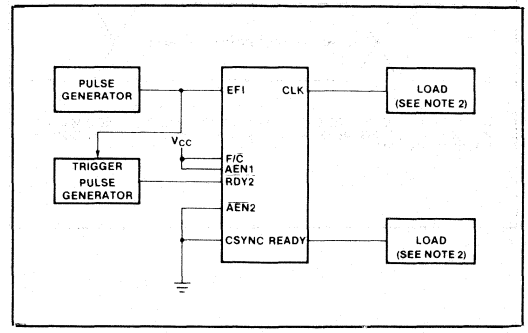

Ready to Clock (using EFI)

NOTES:

1. C_L = 100 pF.
2. C_L = 30 pF.

AFN-01399A

I8286/8287
OCTAL BUS TRANSCEIVER

INDUSTRIAL

- **Data Bus Buffer Driver for iAPX 86,88, MCS-80®, MCS-85®, and MCS-48® Families**
- **High Output Drive Capability for Driving System Data Bus**
- **Fully Parallel 8-Bit Transceivers**
- **3-State Outputs**
- **20-Pin Package with 0.3" Center**
- **No Output Low Noise when Entering or Leaving High Impedance State**
- **Industrial Temperature Range: −40°C to +85°C**

The I8286 and I8287 are 8-bit bipolar transceivers with 3-state outputs. The I8287 inverts the input data at its outputs while the I8286 does not. Thus, a wide variety of applications for buffering in microcomputer systems can be met.

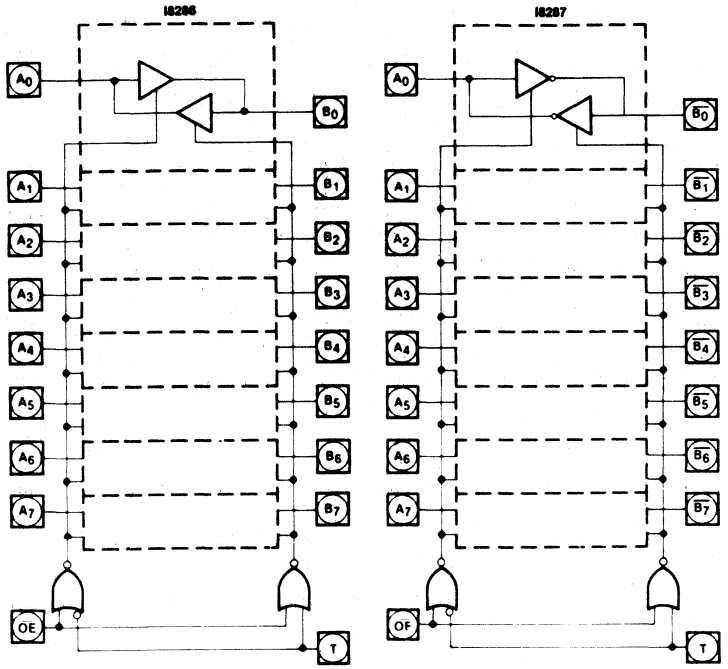

Figure 1. Logic Diagrams

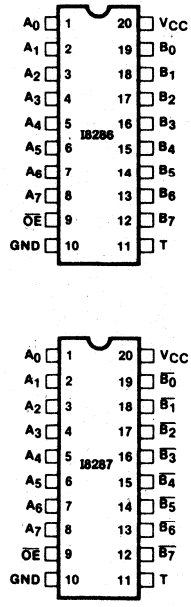

Figure 2. Pin Configuration

Table 1. Pin Description

Symbol	Type	Name and Function
T	I	**Transmit:** T is an input control signal used to control the direction of the transceivers. When HIGH, it configures the transceiver's B_0–B_7 as outputs with A_0–A_7 as inputs. T LOW configures A_0–A_7 as the outputs with B_0–B_7 serving as the inputs.
$\overline{OE}$	I	**Output Enable:** $\overline{OE}$ is an input control signal used to enable the appropriate output driver (as selected by T) onto its respective bus. This signal is active LOW.
A_0–A_7	I/O	**Local Bus Data Pins:** These pins serve to either present data to or accept data from the processor's local bus depending upon the state of the T pin.
B_0–B_7 (I8286) $\overline{B_0}$–$\overline{B_7}$ (I8287)	I/O	**System Bus Data Pins:** These pins serve to either present data to or accept data from the system bus depending upon the state of the T pin.

FUNCTIONAL DESCRIPTION

The I8286 and I8287 transceivers are 8-bit transceivers with high impedance outputs. With T active HIGH and $\overline{OE}$ active LOW, data at the A_0–A_7 pins is driven onto the B_0–B_7 pins. With T inactive LOW and $\overline{OE}$ active LOW data at the B_0–B_7 pins is driven onto the A_0–A_7 pins. No output low glitching will occur whenever the transceivers are entering or leaving the high impedance state.

ABSOLUTE MAXIMUM RATINGS*

Temperature Under Bias . . . . . −40°C to +85°C
Storage Temperature . . . . . −65°C to +150°C
All Output and Supply Voltages . . . . . −0.5V to +7V
All Input Voltages . . . . . −1.0V to +5.5V
Power Dissipation . . . . . 1 Watt

NOTICE: Stresses above those listed under "Absolute Maximum Ratings" may cause permanent damage to the device. This is a stress rating only and functional operation of the device at these or any other conditions above those indicated in the operational sections of this specification is not implied. Exposure to absolute maximum rating conditions for extended periods may affect device reliability.

D.C. CHARACTERISTICS (V_{CC} = 5V ±10%, T_A = −40°C to +85°C)

Symbol	Parameter	Min	Max	Units	Test Conditions
V_C	Input Clamp Voltage		-1	V	I_C = -5 mA
I_{CC}	Power Supply Current—8287 —8286		130 160	mA mA	
I_F	Forward Input Current		-0.2	mA	V_F = 0.45V
I_R	Reverse Input Current		50	μA	V_R = 5.25V
V_{OL}	Output Low Voltage —B Outputs —A Outputs		.45 .45	V V	I_{OL} = 20 mA I_{OH} = 10 mA
V_{OH}	Output High Voltage —B Outputs —A Outputs	2.4 2.4		V V	I_{OH} = -5 mA I_{OH} = -1 mA
I_{OFF} I_{OFF}	Output Off Current Output Off Current		I_F I_R		V_{OFF} = 0.45V V_{OFF} = 5.25V
V_{IL}	Input Low Voltage —A Side —B Side		0.8 0.9	V V	V_{CC} = 5.0V, See Note 1 V_{CC} = 5.0V, See Note 1
V_{IH}	Input High Voltage	2.0		V	V_{CC} = 5.0V, See Note 1
C_{IN}	Input Capacitance		12	pF	F = 1 MHz V_{BIAS} = 2.5V, V_{CC} = 5V T_A = 25°C

A.C. CHARACTERISTICS (V_{CC} = 5V ±10%, T_A = −40°C to +85°C)

(Loading: B Outputs—I_{OL} = 20 mA, I_{OH} = −5 mA, C_L = 300 pF;
A Outputs—I_{OL} = 10 mA, I_{OH} = −1 mA, C_L = 100 pF)

Symbol	Parameter	Min.	Max.	Units	Test Conditions
TIVOV	Input to Output Delay Inverting Non-Inverting		 25 35	 ns ns	(See Note 2)
TEHTV	Transmit/Receive Hold Time	TEHOZ		ns	
TTVEL	Transmit/Receive Setup	30		ns	
TEHOZ	Output Disable Time		25	ns	
TELOV	Output Enable Time	10	50	ns	
TILIH, TOLOH	Input, Output Rise Time		20	ns	From 0.8V to 2.0V
TIHIL, TOHOL	Input, Output Fall Time		12	ns	From 2.0V to 0.8V

NOTES:
1. B Outputs—I_{OL} = 20 mA, I_{OH} = −5 mA, C_L = 300 pF; A Outputs—I_{OL} = 10 mA, I_{OH} = −1 mA, C_L = 100 pF.
2. See waveforms and test load circuit following.

A.C. TESTING INPUT, OUTPUT WAVEFORM

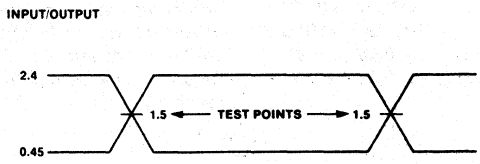

A.C. TESTING: INPUTS ARE DRIVEN AT 2.4V FOR A LOGIC "1" AND 0.45V FOR A LOGIC "0." TIMING MEASUREMENTS ARE MADE AT 1.5V FOR BOTH A LOGIC "1" AND "0."

TEST LOAD CIRCUITS

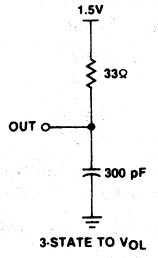

3-STATE TO V_{OL}

B OUTPUT

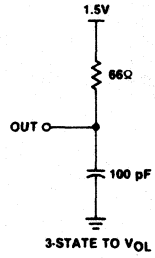

3-STATE TO V_{OL}

A OUTPUT

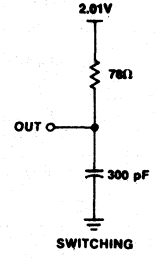

SWITCHING

B OUTPUT

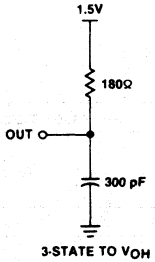

3-STATE TO V_{OH}

B OUTPUT

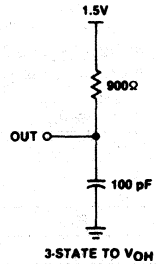

3-STATE TO V_{OH}

A OUTPUT

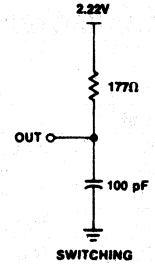

SWITCHING

A OUTPUT

WAVEFORMS

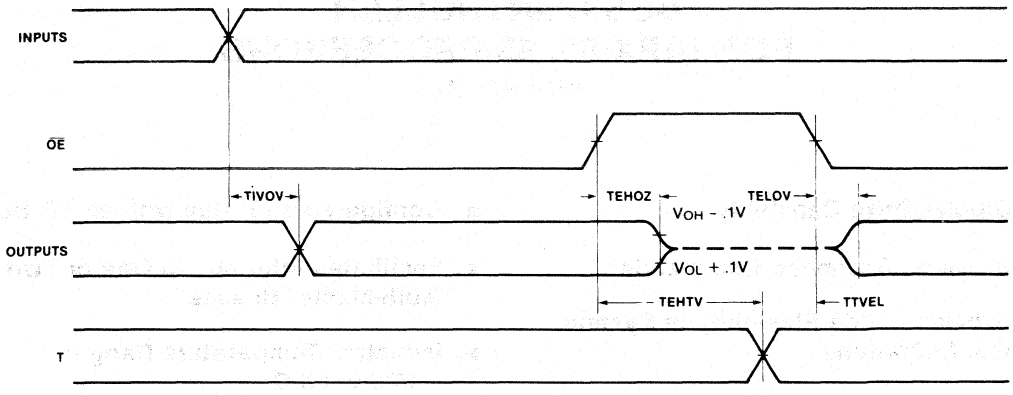

NOTE: 1. ALL TIMING MEASUREMENTS ARE MADE AT 1.5V UNLESS OTHERWISE NOTED.

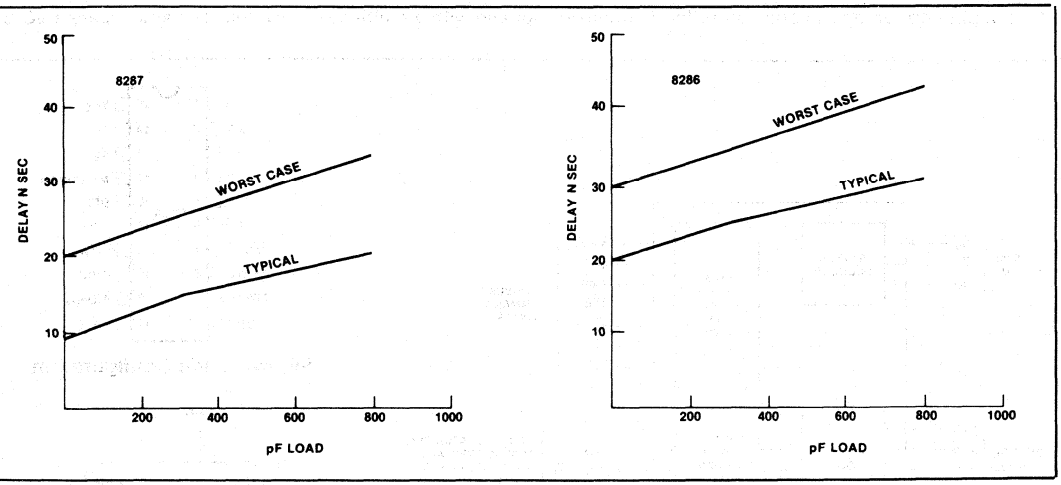

Output Delay vs. Capacitance

I8288
BUS CONTROLLER FOR iAPX 86, 88 PROCESSORS

INDUSTRIAL

- **Bipolar Drive Capability**
- **Provides Advanced Commands**
- **Provides Wide Flexibility in System Configurations**
- **3-State Command Output Drivers**
- **Configurable for Use with an I/O Bus**
- **Facilitates Interface to One or Two Multi-Master Busses**
- **Industrial Temperature Range: −40°C to 85°C**

The Intel® I8288 Bus Controller is a 20-pin bipolar component for use with medium-to-large iAPX 86 processing systems. The bus controller provides command and control timing generation as well as bipolar bus drive capability while optimizing system performance.

A strapping option on the bus controller configures it for use with a multi-master system bus and separate I/O bus.

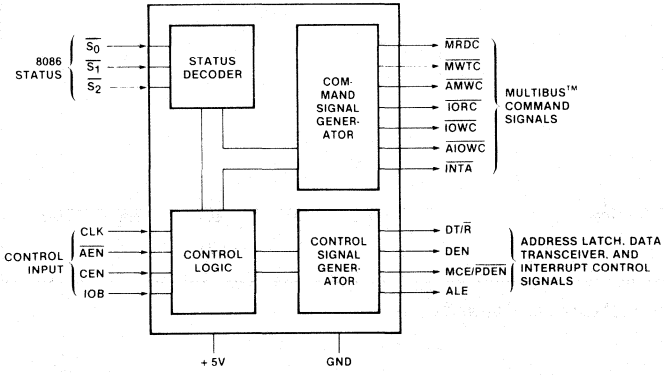

Figure 1. Block Diagram

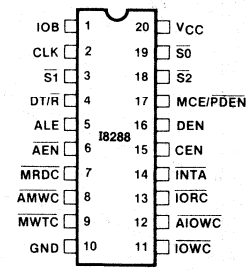

Figure 2. Pin Configuration

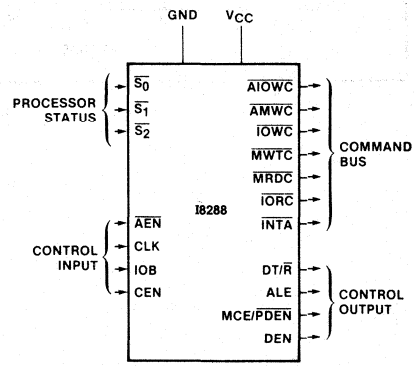

Figure 3. Functional Pin-Out

ABSOLUTE MAXIMUM RATINGS*

Temperature Under Bias ..... −40°C to 85°C
Storage Temperature ..... −65°C to +150°C
All Output and Supply Voltages ..... −0.5V to +7V
All Input Voltages ..... −1.0V to 5.5V
Power Dissipation ..... 1.5 Watt

NOTICE: Stresses above those listed under "Absolute Maximum Ratings" may cause permanent damage to the device. This is a stress rating only and functional operation of the device at these or any other conditions above those indicated in the operation sections of this specification is not implied. Exposure to absolute maximum ratining conditions for extended periods may affect device reliability.

D.C. CHARACTERISTICS (V_{CC} = 5V ±10%, T_A = −40°C to 85°C)

Symbol	Parameter	Min.	Max.	Unit	Test Conditions
V_C	Input Clamp Voltage		−1	V	I_C = −5 mA
I_{CC}	Power Supply Current		230	mA	
I_F	Forward Input Current		−0.7	mA	V_F = 0.45V
I_R	Reverse Input Current		50	μA	V_R = V_{CC}
V_{OL}	Output Low Voltage Command Outputs Control Outputs		 0.5 0.5	 V V	 I_{OL} = 20 mA I_O = 16MA
V_{OH}	Output High Voltage Command Outputs Control Outputs	 2.4 2.4		 V V	 I_{OH} = −5 mA I_{OH} = −1 mA
V_{IL}	Input Low Voltage		0.8	V	
V_{IH}	Input High Voltage	2.0		V	
I_{OFF}	Output Off Current		100	μA	V_{OFF} = 0.4 to 5.25V

A.C. CHARACTERISTICS (V_{CC} = 5V ±10%, T_A = −40°C to 85°C)

TIMING REQUIREMENTS

Symbol	Parameter	Min.	Max.	Unit	Test Conditions
TCLCL	CLK Cycle Period	125		ns	
TCLCH	CLK Low Time	66		ns	
TCHCL	CLK High Time	40		ns	
TSVCH	Status Active Setup Time	35		ns	
TCHSV	Status Active Hold Time	10		ns	
TSHCL	Status Inactive Setup Time	35		ns	
TCLSH	Status Inactive Hold Time	10		ns	
TILIH	Input Rise Time		20	ns	From 0.8V to 2.0V
TIHIL	Input Fall Time		12	ns	From 2.0V to 0.8V

A.C. CHARACTERISTICS (Continued)

TIMING RESPONSES

Symbol	Parameter	Min.	Max.	Unit	Test Conditions
TCVNV	Control Active Delay	5	45	ns	
TCVNX	Control Inactive Delay	10	50	ns	
TCLLH, TCLMCH	ALE MCE Active Delay (from CLK)		25	ns	
TSVLH, TSVMCH	ALE MCE Active Delay (from Status)		25	ns	MRDC, IORC, MWTC, IOWC, INTA, AMWC, AIOWC: I_{OL} = 20 mA, I_{OH} = +5 mA, C_L = 300 pF
TCHLL	ALE Inactive Delay	4	15	ns	
TCLML	Command Active Delay	10	35	ns	
TCLMH	Command Inactive Delay	10	35	ns	
TCHDTL	Direction Control Active Delay		50	ns	
TCHDTH	Direction Control Inactive Delay		30	ns	
TAELCH	Command Enable Time		40	ns	
TAEHCZ	Command Disable Time		40	ns	Other: I_{OL} = 16 mA, I_{OH} = −1 mA, C_L = 80 pF
TAELCV	Enable Delay Time	115	200	ns	
TAEVNV	AEN to DEN		20	ns	
TCEVNV	CEN to DEN, PDEN		25	ns	
TCELRH	CEN to Command		TCLML	ns	
TOLOH	Output Rise Time		20	ns	From 0.8V to 2.0V
TOHOL	Output Fall Time		12	ns	From 2.0V to 0.8V

A.C. TESTING INPUT, OUTPUT WAVEFORM

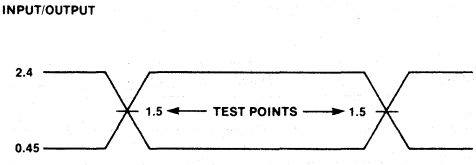

A.C. TESTING: INPUTS ARE DRIVEN AT 2.4V FOR A LOGIC "1" AND 0.45V FOR A LOGIC "0". TIMING MEASUREMENTS ARE MADE AT 1.5V FOR BOTH A LOGIC "1" AND "0."

TEST LOAD CIRCUITS—3-STATE COMMAND OUTPUT TEST LOAD

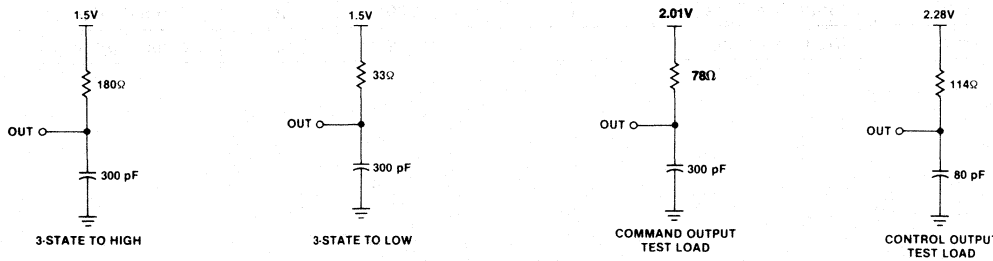

AFN-01400A

WAVEFORMS

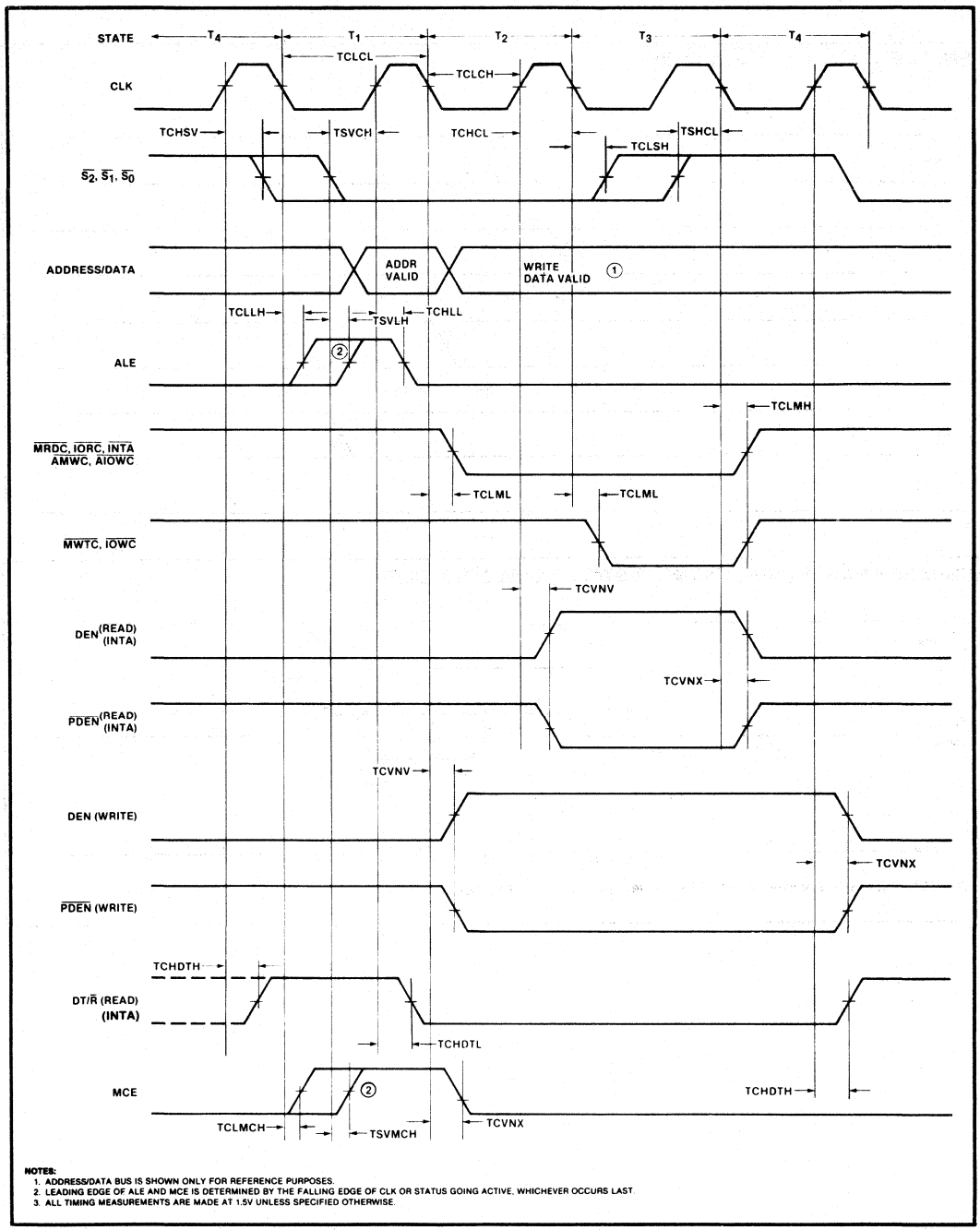

NOTES:
1. ADDRESS/DATA BUS IS SHOWN ONLY FOR REFERENCE PURPOSES.
2. LEADING EDGE OF ALE AND MCE IS DETERMINED BY THE FALLING EDGE OF CLK OR STATUS GOING ACTIVE, WHICHEVER OCCURS LAST.
3. ALL TIMING MEASUREMENTS ARE MADE AT 1.5V UNLESS SPECIFIED OTHERWISE.

WAVEFORMS (Continued)

DEN, PDEN QUALIFICATION TIMING

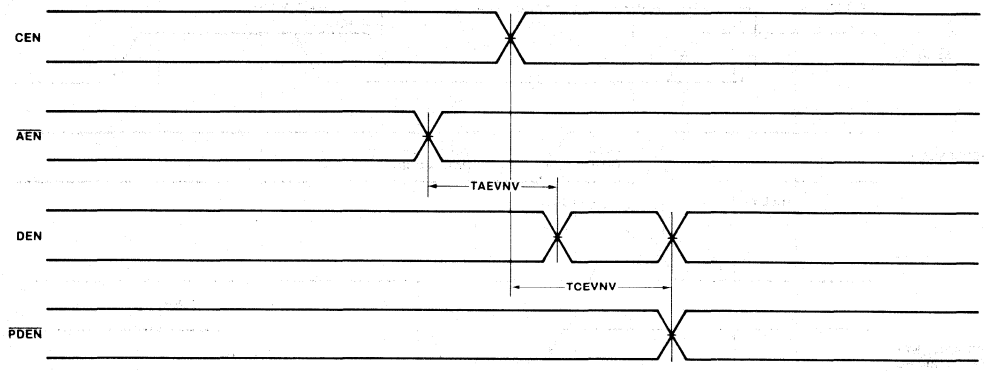

ADDRESS ENABLE (AEN) TIMING (3-STATE ENABLE/DISABLE)

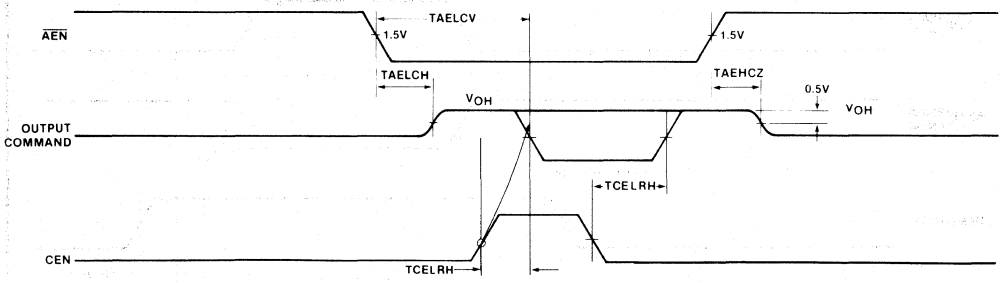

NOTE: CEN must be low or valid prior to T2 to prevent the command from being generated.

PRELIMINARY

I8289
BUS ARBITER

INDUSTRIAL

- **Provides Multi-Master System Bus Protocol**
- **Synchronizes iAPX 86, 88 Processors with Multi-Master Bus**
- **Provides Simple Interface with 8288 Bus Controller**
- **Four Operating Modes for Flexible System Configuration**
- **Compatible with Intel Bus Standard MULTIBUS™**
- **Provides System Bus Arbitration for 8089 IOP in Remote Mode**
- **Full Industrial Temperature Range −40°C to +85°C**

The Intel I8289 Bus Arbiter is a 20-pin, 5-volt-only bipolar component for use with medium to large iAPX 86, 88 multimaster/multiprocessing systems. The I8289 provides system bus arbitration for systems with multiple bus masters, such as an I8086 CPU with I8089 IOP in its REMOTE mode, while providing bipolar buffering and drive capability.

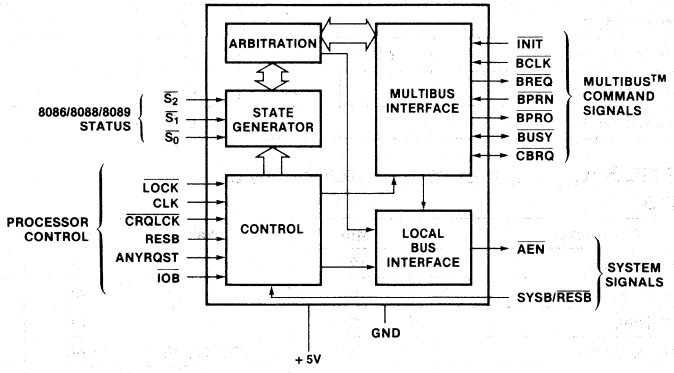

Figure 1. Block Diagram

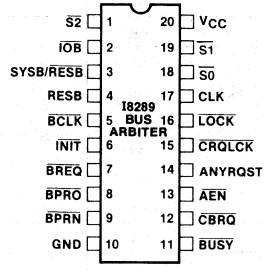

Figure 2. Pin Diagram

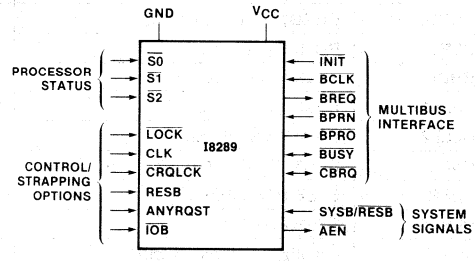

Figure 3. Functional Pinout

ABSOLUTE MAXIMUM RATINGS*

Temperature Under Bias . . . . . 0°C to 70°C
Storage Temperature . . . . . −65°C to +150°C
All Output and Supply Voltages . . . . . −0.5V to +7V
All Input Voltages . . . . . −1.0V to +5.5V
Power Dissipation . . . . . 1.5 Watt

NOTICE: Stresses above those listed under "Absolute Maximum Ratings" may cause permanent damage to the device. This is a stress rating only and functional operation of the device at these or any other conditions above those indicated in the operational sections of this specification is not implied. Exposure to absolute maximum rating conditions for extended periods may affect device reliability.

D.C. CHARACTERISTICS (T_A = −40°C to +85°C, V_{CC} = +5V ±10%)

Symbol	Parameter	Min.	Max.	Units	Test Condition
V_C	Input Clamp Voltage		−1.0	V	V_{CC} = 4.50V, I_C = −5 mA
I_F	Input Forward Current		−0.5	mA	V_{CC} = 5.50V, V_F = 0.45V
I_R	Reverse Input Leakage Current		60	μA	V_{CC} = 5.50, V_R = 5.50
V_{OL}	Output Low Voltage $\overline{BUSY}$, $\overline{CBRQ}$ $\overline{AEN}$ $\overline{BPRO}$, $\overline{BREQ}$		 0.45 0.45 0.45	 V V V	 I_{OL} = 20 mA I_{OL} = 16 mA I_{OL} = 10 mA
V_{OH}	Output High Voltage $\overline{BUSY}$, $\overline{CBRQ}$	Open Collector			
	All Other Outputs	2.4		V	I_{OH} = 400 μA
I_{CC}	Power Supply Current		165	mA	
V_{IL}	Input Low Voltage		.8	V	
V_{IH}	Input High Voltage	2.0		V	
Cin Status	Input Capacitance		25	pF	
Cin (Others)	Input Capacitance		12	pF	

A.C. CHARACTERISTICS (V_{CC} = +5V ±10%, T_A = −40°C to +85°C)

TIMING REQUIREMENTS

Symbol	Parameter	Min.	Max.	Unit	Test Condition
TCLCL	CLK Cycle Period	125		ns	
TCLCH	CLK Low Time	65		ns	
TCHCL	CLK High Time	35		ns	
TSVCH	Status Active Setup	65	TCLCL-10	ns	
TSHCL	Status Inactive Setup	50	TCLCL-10	ns	
THVCH	Status Active Hold	10		ns	
THVCL	Status Inactive Hold	10		ns	
TBYSBL	BUSY↑↓Setup to BCLK↓	20		ns	
TCBSBL	CBRQ↑↓Setup to BCLK↓	20		ns	
TBLBL	BCLK Cycle Time	100		ns	
TBHCL	BCLK High Time	30	.65[TBLBL]	ns	
TCLLL1	LOCK Inactive Hold	10		ns	
TCLLL2	LOCK Active Setup	40		ns	
TPNBL	BPRN↓↑to BCLK Setup Time	15		ns	
TCLSR1	SYSB/RESB Setup	0		ns	
TCLSR2	SYSB/RESB Hold	20		ns	
TIVIH	Initialization Pulse Width	3 TBLBL+ 3 TCLCL		ns	
TILIH	Input Rise Time		20	ns	From 0.8 to 2.0V
TIHIL	Input Fall Time		12	ns	From 2.0V to 0.8V

A.C. CHARACTERISTICS (Continued)

TIMING RESPONSES

Symbol	Parameter	Min.	Max.	Unit	Test Condition
TBLBRL	BCLK to BREQ Delay↓↑		35	ns	
TBLPOH	BCLK to BPRO↓↑ (See Note 1)		40	ns	
TPNPO	BPRN↓↑to BPRO↓↑Delay (See Note 1)		25	ns	
TBLBYL	BCLK to BUSY Low		60	ns	
TBLBYH	BCLK to BUSY Float (See Note 2)		35	ns	
TCLAEH	CLK to AEN High		65	ns	
TBLAEL	BCLK to AEN Low		40	ns	
TBLCBL	BCLK to CBRQ Low		60	ns	
TRLCRH	BCLK to CBRQ Float (See Note 2)		35	ns	
TOLOH	Output Rise Time		20	ns	From 0.8V to 2.0V
TOHOL	Output Fall Time		12	ns	From 2.0V to 0.8V

↓↑ Denotes that spec applies to both transitions of the signal.

NOTES:
1. BCLK generates the first BPRO wherein subsequent BPRO changes lower in the chain are generated through BPRON.
2. Measured at .5V above GND.

A.C. TESTING INPUT, OUTPUT WAVEFORM

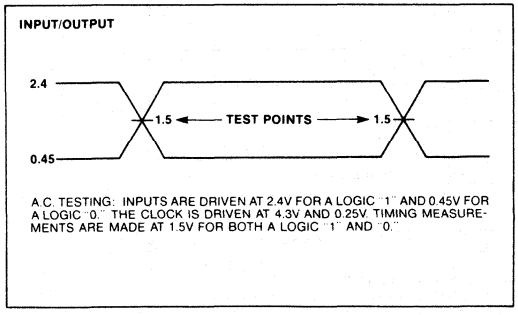

A.C. TESTING LOAD CIRCUIT

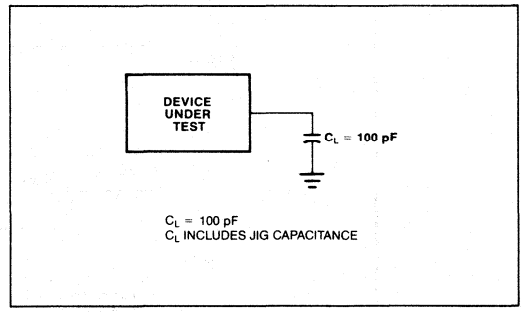

WAVEFORMS

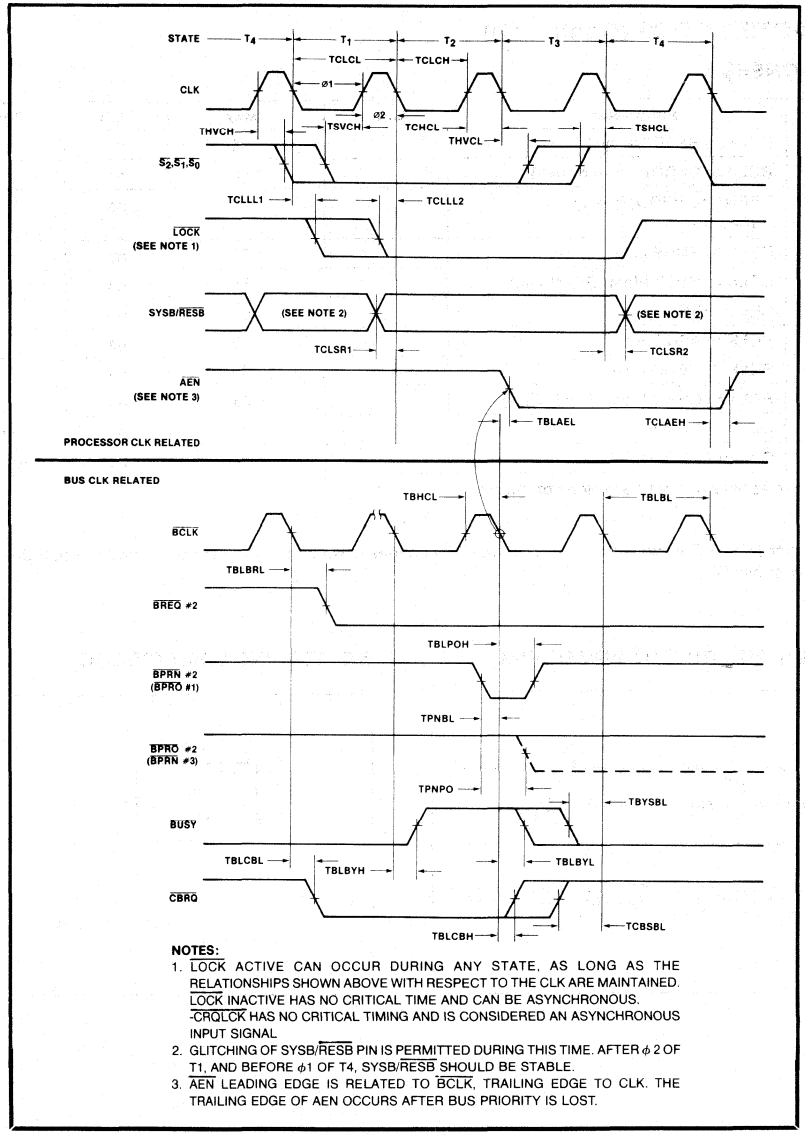

NOTES:

1. LOCK ACTIVE CAN OCCUR DURING ANY STATE, AS LONG AS THE RELATIONSHIPS SHOWN ABOVE WITH RESPECT TO THE CLK ARE MAINTAINED. LOCK INACTIVE HAS NO CRITICAL TIME AND CAN BE ASYNCHRONOUS. -CRQLCK HAS NO CRITICAL TIMING AND IS CONSIDERED AN ASYNCHRONOUS INPUT SIGNAL.
2. GLITCHING OF SYSB/RESB PIN IS PERMITTED DURING THIS TIME. AFTER ϕ 2 OF T1, AND BEFORE ϕ1 OF T4, SYSB/RESB SHOULD BE STABLE.
3. AEN LEADING EDGE IS RELATED TO BCLK, TRAILING EDGE TO CLK. THE TRAILING EDGE OF AEN OCCURS AFTER BUS PRIORITY IS LOST.

ADDITIONAL NOTES:

The signals related to CLK are typical processor signals, and do not relate to the depicted sequence of events of the signals referenced to BCLK. The signals shown related to the BCLK represent a hypothetical sequence of events for illustration. Assume 3 bus arbiters of priorities 1, 2 and 3 configured in serial priority resolving scheme as shown in Figure 6. Assume arbiter 1 has the bus and is holding busy low. Arbiter #2 detects its processor wants the bus and pulls low BREQ#2. If BPRN#2 is high (as shown), arbiter #2 will pull low CBRQ line. CBRQ signals to the higher priority arbiter #1 that a lower priority arbiter wants the bus. [A higher priority arbiter would be granted BPRN when it makes the bus request rather than having to wait for another arbiter to release the bus through CBRQ].** Arbiter #1 will relinquish the multi-master system bus when it enters a state not requiring it (see Table 1), by lowering its BPRO#1 (tied to BPRN#2) and releasing BUSY. Arbiter #2 now sees that it has priority from BPRN#2 being low and releases CBRQ. As soon as BUSY signifies the bus is available (high), arbiter #2 pulls BUSY low on next falling edge of BCLK. Note that if arbiter #2 didn't want the bus at the time it received priority, it would pass priority to the next lower priority arbiter by lowering its BPRO #2 [TPNPO].

**Note that even a higher priority arbiter which is acquiring the bus through BPRN will momentarily drop CBRQ until it has acquired the bus.

I8355*
16,384-BIT ROM WITH I/O

*Directly Compatible with I8085A CPU.

INDUSTRIAL

- **Industrial Temperature Range: −40°C to +85°C**
- **2048 Words × 8 Bits**
- **Single +5V Power Supply**
- **Internal Address Latch**
- **2 General Purpose 8-Bit I/O Ports**
- **Each I/O Port Line Individually Programmable as Input or Output**
- **Multiplexed Address and Data Bus**
- **40-Pin DIP**

The Intel® I8355 is a ROM and I/O chip to be used in the MCS-85® microcomputer system. The ROM portion is organized as 2048 words by 8 bits. It has a maximum access time of 400 ns to permit use with no wait states in the I8085A CPU.

The I/O portion consists of 2 general purpose I/O ports. Each I/O port has 8 port lines, and each I/O port line is individually programmable as input or output.

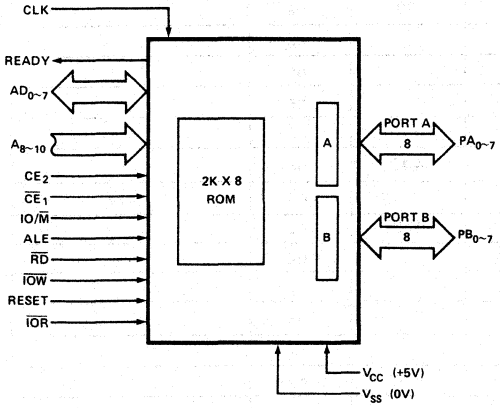

Figure 1. Block Diagram

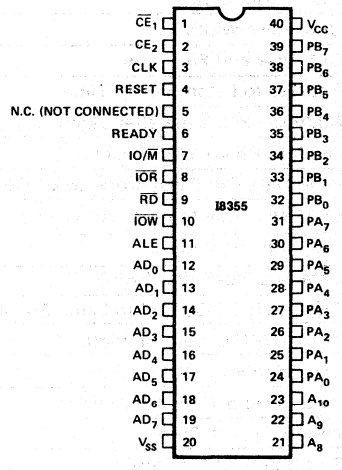

Figure 2. Pin Configuration

ABSOLUTE MAXIMUM RATINGS*

Temperature Under Bias ..... −40°C to 85°C
Storage Temperature ..... −65°C to +150°C
Voltage on Any Pin
With Respect to Ground ..... −0.5V to +7V
Power Dissipation 1.5W

**NOTICE: Stresses above those listed under "Absolute Maximum Ratings" may cause permanent damage to the device. This is a stress rating only and functional operation of the device at these or any other conditions above those indicated in the operational sections of this specification is not implied. Exposure to absolute maximum rating conditions for extended periods may affect device reliability.*

D.C. CHARACTERISTICS (T_A = -40°C to 85°C, V_{CC} = 5V ± 5%)

Symbol	Parameter	Min.	Max.	Units	Test Conditions
V_{IL}	Input Low Voltage	-0.5	0.8	V	V_{CC} = 5.0V
V_{IH}	Input High Voltage	2.0	V_{CC}+0.5	V	V_{CC} = 5.0V
V_{OL}	Output Low Voltage		0.45	V	I_{OL} = 1.6 mA
V_{OH}	Output High Voltage	2.4		V	I_{OH} = -400μA
I_{IL}	Input Leakage		10	μA	V_{IN} = V_{CC} to 0V
I_{LO}	Output Leakage Current		±10	μA	0.45V ≤V_{OUT} ≤V_{CC}
I_{CC}	V_{CC} Supply Current		180	mA	

A.C. CHARACTERISTICS (T_A = -40°C to 85°C; V_{CC} = 5V ± 5%)

Symbol	Parameter	Min.	Max.	Units	Test Conditions
t_{CYC}	Clock Cycle Time	320		ns	
T_1	CLK Pulse Width	80		ns	
T_2	CLK Pulse Width	120		ns	
t_f,t_r	CLK Rise and Fall Time		30	ns	
t_{AL}	Address to Latch Set Up Time	50		ns	
t_{LA}	Address Hold Time after Latch	80		ns	
t_{LC}	Latch to READ/WRITE Control	100		ns	
t_{RD}	Valid Data Out Delay from READ Control		170	ns	
t_{AD}	Address Stable to Data Out Valid		400	ns	
t_{LL}	Latch Enable Width	100		ns	
t_{RDF}	Data Bus Float after READ	0	100	ns	
t_{CL}	READ/WRITE Control to Latch Enable	20		ns	
t_{CC}	READ/WRITE Control Width	250		ns	
t_{DW}	Data In to Write Set Up Time	150		ns	
t_{WD}	Data In Hold Time After WRITE	10		ns	
t_{WP}	WRITE to Port Output		400	ns	
t_{PR}	Port Input Set-Up Time	50		ns	
t_{RP}	Port Input Hold Time	50		ns	
t_{RYH}	READY HOLD Time	0	160	ns	
t_{ARY}	ADDRESS (CE) to READY		160	ns	
t_{RV}	Recovery Time Between Controls	300		ns	
t_{RDE}	READ Control to Data Bus Enable	10		ns	

A.C. TESTING INPUT, OUTPUT WAVEFORM

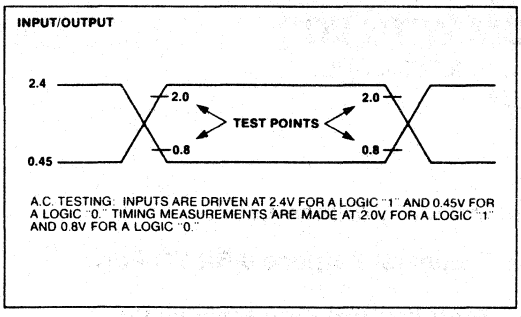

A.C. TESTING: INPUTS ARE DRIVEN AT 2.4V FOR A LOGIC "1" AND 0.45V FOR A LOGIC "0." TIMING MEASUREMENTS ARE MADE AT 2.0V FOR A LOGIC "1" AND 0.8V FOR A LOGIC "0."

A.C. TESTING LOAD CIRCUIT

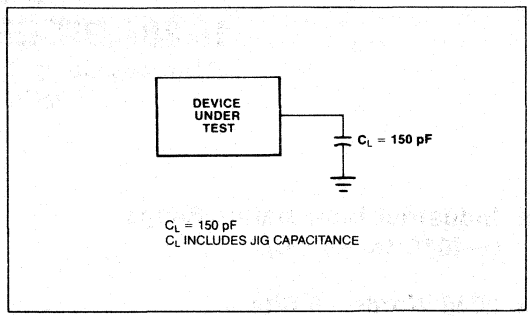

C_L = 150 pF
C_L INCLUDES JIG CAPACITANCE

I8755A
16,384-BIT EPROM WITH I/O

*Directly Compatible with I8085A CPU.

INDUSTRIAL

- **Industrial Temperature Range (−40°C to +85°C)**
- **2048 Words × 8 Bits**
- **Single +5V Power Supply (V_{CC})**
- **U.V. Erasable and Electrically Reprogrammable**
- **Internal Address Latch**
- **2 General Purpose 8-Bit I/O Ports**
- **Each I/O Port Line Individually Programmable as Input or Output**
- **Multiplexed Address and Data Bus**
- **40-Pin DIP**

The Intel® I8755A is an erasable and electrically reprogrammable ROM (EPROM) and I/O chip to be used in the MCS-85® microcomputer system. The EPROM portion is organized as 2048 words by 8 bits. It has a maximum access time of 750 ns to permit use with one wait state in a 3 MHz I8085A system.

The I/O portion consists of 2 general purpose I/O ports. Each I/O port has 8 port lines, and each I/O port line is individually programmable as input or output.

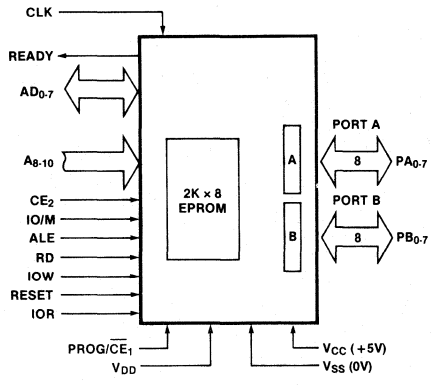

Figure 1. Block Diagram

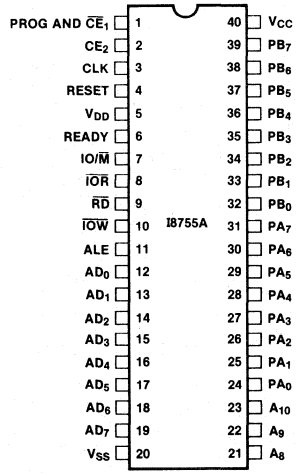

Figure 2. Pin Configuration

ABSOLUTE MAXIMUM RATINGS*

Temperature Under Bias ..... −40°C to +85°C
Storage Temperature ..... −65°C to +150°C
Voltage on Any Pin
With Respect to Ground ..... −0.5V to +7V
Power Dissipation 1.5W

*Except for programming voltage

**NOTICE: Stresses above those listed under "Absolute Maximum Ratings" may cause permanent damage to the device. This is a stress rating only and functional operation of the device at these or any other conditions above those indicated in the operational sections of this specification is not implied. Exposure to absolute maximum rating conditions for extended periods may affect device reliability.*

D.C. CHARACTERISTICS (T_A = −40°C to +85°C, V_{CC} = V_{DD} = ±10%)

Symbol	Parameter	Min.	Max.	Units	Test Conditions
V_{IL}	Input Low Voltage	−0.5	0.7	V	
V_{IH}	Input High Voltage	2.2	V_{CC} + 0.5	V	
V_{OL}	Output Low Voltage		0.45	V	I_{OL} = 1.6 mA
V_{OH}	Output High Voltage	2.4		V	I_{OH} = −400 μA
I_{IL}	Input Leakage		10	μA	$V_{SS} \leq V_{IN} \leq V_{CC}$
I_{LO}	Output Leakage Current		±10	μA	$0.45V \leq V_{OUT} \leq V_{CC}$
I_{CC}	V_{CC} Supply Current		180	mA	
I_{DD}	V_{DD} Supply Current		30	mA	$V_{DD} = V_{CC}$
C_{IN}	Input Capacitance		10	pF	f = 1 MHz
$C_{I/O}$	Input/Output Capacitance		15	pF	f = 1 MHz

A.C. CHARACTERISTICS (T_A = −40°C to +85°C, V_{CC} = V_{DD} = ±10%)

Symbol	Parameter	Min.	Max.	Units	Test Conditions
t_{CYC}	Clock Cycle Time	320		ns	
T_1	CLK Pulse Width	80		ns	C_{LOAD} = 150 pF
T_2	CLK Pulse Width	120		ns	
t_f, t_r	CLK Rise and Fall Time		30	ns	
t_{AL}	Address to Latch Set Up Time	60		ns	
t_{LA}	Address Hold Time after Latch	90		ns	
t_{LC}	Latch to READ/WRITE Control	110		ns	
t_{RD}	Valid Data Out Delay from READ Control*		180	ns	
t_{AD}	Address Stable to Data Out Valid**		470	ns	150 pF Load
t_{LL}	Latch Enable Width	120		ns	
t_{RDF}	Data Bus Float after READ	0	100	ns	
t_{CL}	READ/WRITE Control to Latch Enable	40		ns	
t_{CC}	READ/WRITE Control Width	270		ns	
t_{DW}	Data In to WRITE Set Up Time	170		ns	
t_{WD}	Data In Hold Time After WRITE	30		ns	
t_{WP}	WRITE to Port Output		400	ns	
t_{PR}	Port Input Set Up Time	60		ns	
t_{RP}	Port Input Hold Time	60		ns	
t_{RYH}	READY HOLD TIME	10	160	ns	
t_{ARY}	ADDRESS (CE) to READY)		220	ns	
t_{RV}	Recovery Time Between Controls	350		ns	
t_{RDE}	Data Out Delay from READ Control	20		ns	

*T_{AD} − (T_{AL} + T_{LC}), whichever is greater.

**Defines ALE to Data Out Valid in conjunction with T_{AL}.

A.C. TESTING INPUT, OUTPUT WAVEFORM

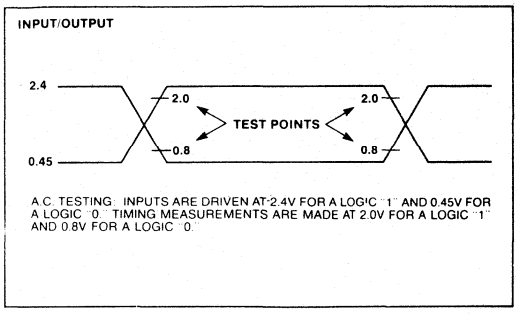

A.C. TESTING: INPUTS ARE DRIVEN AT 2.4V FOR A LOGIC "1" AND 0.45V FOR A LOGIC "0". TIMING MEASUREMENTS ARE MADE AT 2.0V FOR A LOGIC "1" AND 0.8V FOR A LOGIC "0".

A.C. TESTING LOAD CIRCUIT

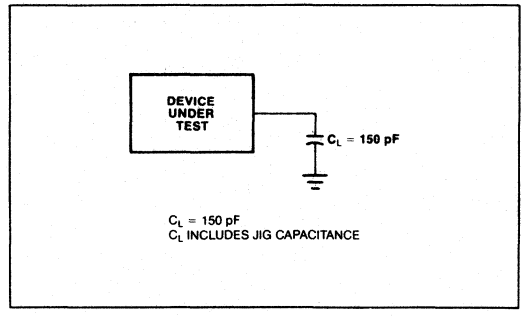

C_L = 150 pF
C_L INCLUDES JIG CAPACITANCE

Military Products 12

FOREWORD

A rapidly increasing number of military and hi-rel applications are turning toward microprocessor based architectures and high density memory components, taking advantage of the benefits of size, economy, performance and reliability. This demand for high technology LSI products with proven reliability is a natural extension of Intel's historic capabilities.

Intel offers a broad line of LSI components processed and tested to military standards. All standard products are screened to full Class B requirements of MIL-STD-883B, Method 5004. Additionally, complete quality conformance testing is available as a customer option in accordance with MIL-STD-883B, Method 5005.

Intel will continue to demonstrate its commitment to the military/hi-rel market by upgrading the latest breakthroughs in high performance LSI/VLSI technology to military standards. Also, as slash sheets are issued, Intel plans to support additional JAN qualifications.

In 1977, Intel qualified the first military microprocessor under MIL-M-38510. The JAN version of the industry standard 8080A is listed in Part I of the Qualified Products List (QPL-38510) as M38510/42001BQB. See Table I for other JAN qualified products.

Every effort is made to adopt the processing and performance standards set by official military specifications. Table I lists the available versions of each product:

MIL-M-38510: Products qualified to MIL-M-38510 and listed in QPL-38510.

Example:	**Part number**	**Marking**
	M38510/42001BQB	JM38510/42001BQB

883/CLASS B: Intel's standard military product with full Class B processing per MIL-STD-883B, Methods 5004 and 5005.

Example:	**Part number**	**Marking**
	MD2716/B	MD2716/B

DESC SPEC: Class B products screened to DESC Selected Item Drawing (issued by Defense Electronics Supply Center). DESC specs become obsolete when QPL source for JAN product becomes available.

Example:	**Part number**	**Marking**
	7802201JB	7802201JB MD2716/B

MIL TEMP ONLY (MTO): Standard commercial processing, guaranteed to meet Intel military data sheet electrical specifications across the rated temperature range. Must be special ordered.

Example:	**Part number**	**Marking**
	MD2716/S8311	MD2716 S8311

For additional technical information on Military Products, refer to the Military Products Data Catalog.

TABLE I

MILITARY PRODUCTS

Product	Mil Temp Only (S-spec No.)	883/ Class B	Desc Selected Item Drawing	JAN (MIL-M-38510/XXX)
M2114A-4	S8399	X		
M2114A-5	S8400	X		
M2114AL-3	S8401	X		
M2114AL-4	S8402	X		
M2118-4	S8403	X		
M2118-7	S8379	X		
M2147H	S8404	X		238
M2147H-3	S8405	X		238
M2148H	S8406	X		238*
M2167-10	S8510*	X		
M2716	S8311	X	78022	
M2732	S8376	X	80012	
M2732A*	S8511*	X		
M2764	S8513*	X		
M2816	S8440	X		
M3632	S8512*	X		
M3636*	S8375	X		210
M8048		X		490*
M8748	S8502	X		
M8035L	S8503	X		
M8080A	S8027	X		420
M8212	S8035	X		
M8214	S8036	X		
M8216	S8037	X		
M8224	S8028	X		
M8226	S8038	X		
M8228	S8029	X		
M8231A	S8509	X		
M8243	S8508	X		
M8085A	S8370	X	79010	
M8155	S8374	X		
M8755A		X		
M8086	S8368	X		530
M8282	S8375	X		
M8283		X		
M8284	S8372	X		
M8286	S8373	X		
M8287		X		
M8288	S8371	X		
M8251A	S8504	X		
M8253	S8505	X		
M8255A	S8032	X		
M8257		X		
M8259A	S8506	X		
M8741A	S8507	X		

*Pending—Call nearest Intel sales office for information.

MILITARY PRODUCT REQUIREMENTS

General Requirements	MIL-M-38510 Requirements	JAN (Class B)	883 (Class B)
CERTIFICATION			
A. Product Assurance Program Plan	Para. 3.4.1.2	X	MIL-STD-883 Requirements Apply
B. Manufacturer's Certification	Para. 3.4.1.2.1	X	
DEVICE QUALIFICATION	Para. 4.4	X	
TRACEABILITY	Para. 3.4.6	X	
COUNTRY OF MANUFACTURE	Para. 3.2.1	X	
Screening Test Requirements	**Screening Per Method 5004 of MIL-STD-883**		
INTERNAL VISUAL	2010, Cond. B	100%	100%
STABILIZATION BAKE	1008, Cond. C (24 Hrs. @ 150°C)	100%	100%
TEMPERATURE CYCLING	1010, Cond. C (10 cycles −65°C to +150°C)	100%	100%
CONSTANT ACCELERATION	2001, Cond. D or E As Applicable	100%	100%
SEAL (HERMETICITY)			
A. Fine	1014, Cond. B (5×10^{-8} atm-cc/sec)	100%	100%
B. Gross	Cond. C		
PRE BURN-IN ELECTRICAL	Per Applicable Device Specification	100%	100%
BURN-IN	1015, Cond. C or D (160 Hrs. @ 125°C)	100%	100%
FINAL ELECTRICAL TESTS			
A. Static (@ 25°C, Min and Max Rated Temp)	Per Applicable Device Specification	100%	100%
B. Functional and Switching (@25°C, Min and Max Rated Temp)	Per Applicable Device Specification	100%	100%
EXTERNAL VISUAL	2009	100%	100%
Quality Conformance Inspection Tests	**Per MIL-STD-883, Method 5005**	**JAN (Level B)**	**883 (Level B)**
GROUP A Electrical Tests	Per Applicable Device Specification. Table I, Subgroups as Required	Every Inspection Lot	Every Inspection Lot
GROUP B Package Function and Mechanical Tests	Per Table IIb, Subgroups 1-3	Every 6 Weeks	Available Option
GROUP C Die Related Tests	Per Table III, Subgroups 1 and 2	Every 12 Weeks	Available Option
GROUP D Package Related Tests	Per Table IV, Subgroups 1-5	Every 6 Months	Available Option

M2114A
1024 X 4 BIT STATIC RAM

MILITARY

	M2114AL-3	M2114AL-4	M2114A-4	M2114A-5
Max. Access Time (ns)	150	200	200	250
Max. Current (mA)	50	50	70	70

- **HMOS Technology**
- **Low Power, High Speed**
- **Identical Cycle and Access Times**
- **Single +5V Supply ±10%**
- **High Density 18 Pin Package**
- **Completely Static Memory - No Clock or Timing Strobe Required**
- **Directly TTL Compatible: All Inputs and Outputs**
- **Common Data Input and Output Using Three-State Outputs**
- **M2114 Upgrade**
- **Military Temperature Range -55°C to +125°C**

The Intel® M2114A is a 4096-bit static Random Access Memory organized as 1024 words by 4-bits using HMOS, a high performance MOS technology. It uses fully DC stable (static) circuitry throughout, in both the array and the decoding, therefore it requires no clocks or refreshing to operate. Data access is particularly simple since address setup times are not required. The data is read out nondestructively and has the same polarity as the input data. Common input/output pins are provided.

The M2114A is designed for memory applications where the high performance and high reliability of HMOS, low cost, large bit storage, and simple interfacing are important design objectives. The M2114A is placed in an 18-pin package for the highest possible density.

It is directly TTL compatible in all respects: inputs, outputs, and a single +5V supply. A separate Chip Select ($\overline{CS}$) lead allows easy selection of an individual package when outputs are or-tied.

PIN CONFIGURATION

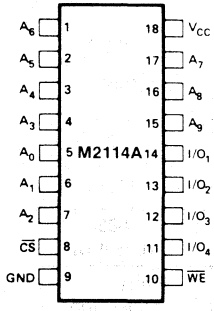

LOGIC SYMBOL

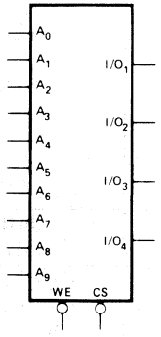

BLOCK DIAGRAM

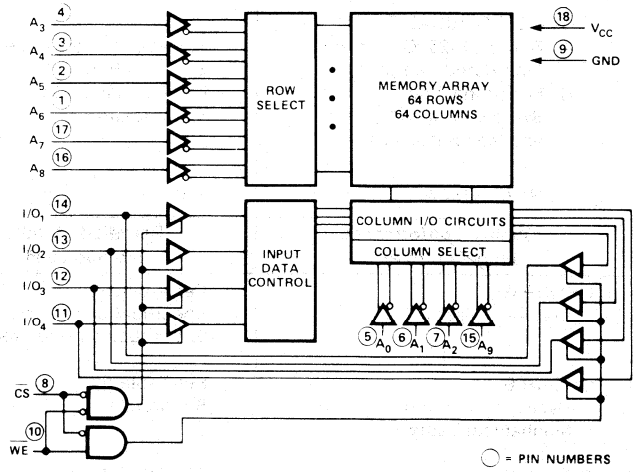

PIN NAMES

A_0–A_9	ADDRESS INPUTS	V_{CC} POWER (+5V)
$\overline{WE}$	WRITE ENABLE	GND GROUND
$\overline{CS}$	CHIP SELECT	
I/O_1–I/O_4	DATA INPUT/OUTPUT	

Intel Corporation assumes no responsibility for the use of any circuitry other than circuitry embodied in an Intel product. No other circuit patent licenses are implied.
INTEL CORPORATION, 1977, 1979, 1980

ABSOLUTE MAXIMUM RATINGS*

Temperature Under Bias ..... -65°C to 135°C
Storage Temperature..... -65°C to 150°C
Voltage on any Pin
With Respect to Ground..... -3.5V to +7V
Power Dissipation..... 1.0W
D.C. Output Current 5mA

*COMMENT: Stresses above those listed under "Absolute Maximum Ratings" may cause permanent damage to the device. This is a stress rating only and functional operation of the device at these or any other conditions above those indicated in the operational sections of this specification is not implied. Exposure is not implied. Exposure to absolute maximum rating conditions for extended periods may affect device reliability.

D.C. AND OPERATING CHARACTERISTICS

T_A = -55°C to +125°C, V_{CC} = 5V ±10%, unless otherwise noted.

SYMBOL	PARAMETER	M2114AL-3/L-4 Min.	Typ.(1)	Max.	M2114A-4/-5 Min.	Typ.(1)	Max.	UNIT	CONDITIONS
I_L	Input Load Current (All Input Pins)			10			10	μA	V_{IN} = 0 to 5.5V
I_{LO}	I/O Leakage Current			10			10	μA	$\overline{CS}$ = V_{IH} $V_{I/O}$ = GND to V_{CC}
I_{CC}	Power Supply Current		25	50		50	70	mA	V_{CC} = max, $I_{I/O}$ = 0 mA, T_A = -55°C
V_{IL}	Input Low Voltage	-3.0		0.8	-3.0		0.8	V	
V_{IH}	Input High Voltage	2.0		6.0	2.0		6.0	V	
I_{OL}	Output Low Current	2.1	9.0		2.1	9.0		mA	V_{OL} = 0.4V
I_{OH}	Output High Current	-1.0	-2.5		-1.0	-2.5		mA	V_{OH} = 2.4V
I_{OS}(2)	Output Short Circuit Current			40			40	mA	V_{OUT} = GND

NOTE: 1. Typical values are for T_A = 25°C and V_{CC} = 5.0V.
2. Duration not to exceed 30 seconds.

CAPACITANCE

T_A = 25°C, f = 1.0 MHz

SYMBOL	TEST	MAX	UNIT	CONDITIONS
$C_{I/O}$	Input/Output Capacitance	5	pF	$V_{I/O}$ = 0V
C_{IN}	Input Capacitance	5	pF	V_{IN} = 0V

NOTE: This parameter is periodically sampled and not 100% tested.

A.C. CONDITIONS OF TEST

Input Pulse Levels..... 0.8 Volt to 2.0 Volt
Input Rise and Fall Times..... 10 nsec
Input and Output Timing Levels..... 1.5 Volts
Output Load ..... 1 TTL Gate and C_L = 100 pF

TYPICAL D.C. AND A.C. CHARACTERISTICS

NORMALIZED ACCESS TIME VS. SUPPLY VOLTAGE

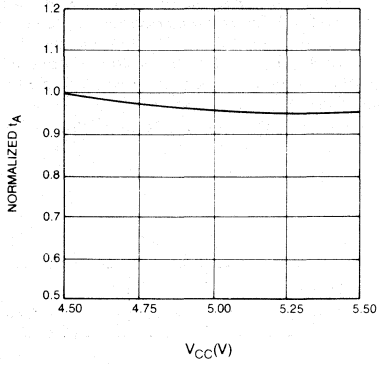

NORMALIZED ACCESS TIME VS. AMBIENT TEMPERATURE

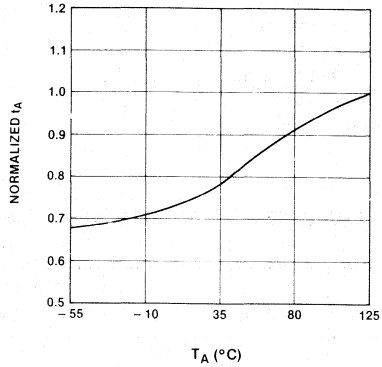

NORMALIZED ACCESS TIME VS. OUTPUT LOAD CAPACITANCE

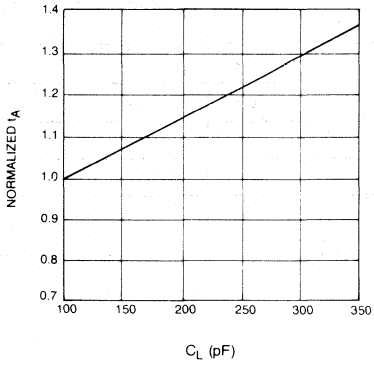

NORMALIZED POWER SUPPLY CURRENT VS. AMBIENT TEMPERATURE

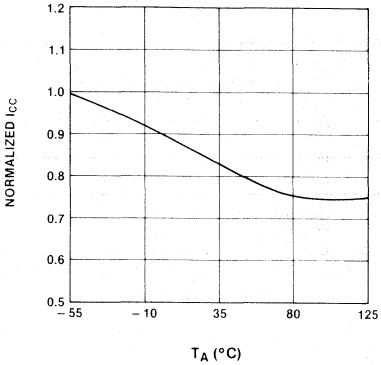

OUTPUT SOURCE CURRENT VS. OUTPUT VOLTAGE

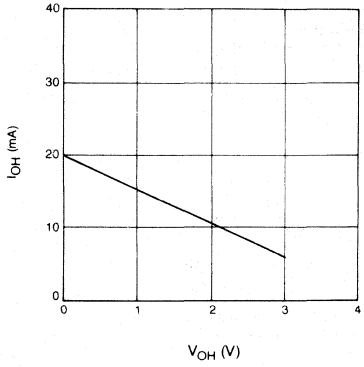

OUTPUT SINK CURRENT VS. OUTPUT VOLTAGE

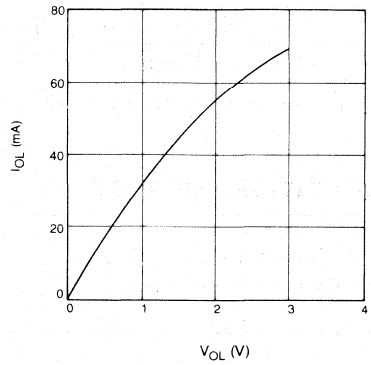

A.C. CHARACTERISTICS T_A = -55°C to +125°C, V_{CC} = 5V ±10%, unless otherwise noted.

READ CYCLE [1]

SYMBOL	PARAMETER	M2114AL-3 Min.	M2114AL-3 Max.	M2114A-4/L-4 Min.	M2114A-4/L-4 Max.	M2114A-5 Min.	M2114A-5 Max.	UNIT
t_{RC}	Read Cycle Time	150		200		250		ns
t_A	Access Time		150		200		250	ns
t_{CO}	Chip Selection to Output Valid		70		70		85	ns
t_{CX}	Chip Selection to Output Active	10		10		10		ns
t_{OTD}	Output 3-state from Deselection		40		50		60	ns
t_{OHA}	Output Hold from Address Change	15		15		15		ns

WRITE CYCLE [2]

SYMBOL	PARAMETER	M2114AL-3 Min.	M2114AL-3 Max.	M2114A-4/L-4 Min.	M2114A-4/L-4 Max.	M2114A-5 Min.	M2114A-5 Max.	UNIT
t_{WC}	Write Cycle Time	150		200		250		ns
t_W	Write Time	90		120		135		ns
t_{WR}	Write Release Time	0		0		0		ns
t_{OTW}	Output 3-state from Write		40		50		60	ns
t_{DW}	Data to Write Time Overlap	90		120		135		ns
t_{DH}	Data Hold from Write Time	0		0		0		ns

NOTES:
1. A Read occurs during the overlap of a low $\overline{CS}$ and a high $\overline{WE}$.
2. A Write occurs during the overlap of a low $\overline{CS}$ and a low $\overline{WE}$. t_W is measured from the latter of $\overline{CS}$ or $\overline{WE}$ going low to the earlier of $\overline{CS}$ or $\overline{WE}$ going high.

WAVEFORMS

READ CYCLE ③

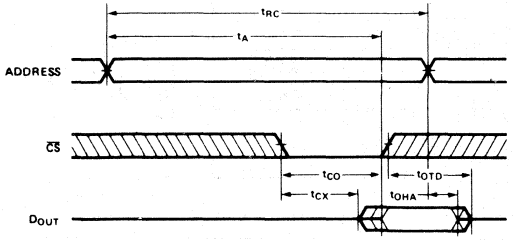

NOTES:
3. $\overline{WE}$ is high for a Read Cycle.
4. If the $\overline{CS}$ low transition occurs simultaneously with the $\overline{WE}$ low transition, the output buffers remain in a high impedance state.
5. $\overline{WE}$ must be high during all address transitions.

WRITE CYCLE

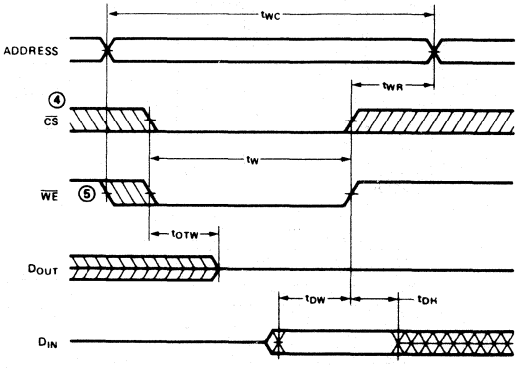

PRELIMINARY

M2118 FAMILY
16,384 x 1 BIT DYNAMIC RAM
MILITARY

	M2118-4	M2118-7
Maximum Access Time (ns)	120	150
Read, Write Cycle (ns)	270	320
Read-Modify Cycle (ns)	320	410

- **Single +5V Supply, ±10% Tolerance**
- **HMOS Technology**
- **Low Power: 150 mW Max. Operating**
  11 mW Max. Standby
- **Low V_{DD} Current Transients**
- **All Inputs, Including Clocks, TTL Compatible**
- **$\overline{CAS}$ Controlled Output is Three-State, TTL Compatible**
- **$\overline{RAS}$ Only Refresh**
- **128 Refresh Cycles Required Every 2ms**
- **Allows Negative Overshoot V_{IL} min = −2V**
- **Military Temperature Range −55° to +85°C**

The Intel® M2118 is a 16,384 word by 1-bit Dynamic MOS RAM designed to operate from a single +5V power supply. The M2118 is fabricated using HMOS—a production proven process for high performance, high reliability, and high storage density.

The M2118 uses a single transistor dynamic storage cell and advanced dynamic circuitry to achieve high speed with low power dissipation. The circuit design minimizes the current transients typical of dynamic RAM operation. These low current transients contribute to the high noise immunity of the M2118 in a system environment.

Multiplexing the 14 address bits into the 7 address input pins allows the M2118 to be packaged in the industry standard 16-pin DIP. The two 7-bit address words are latched into the M2118 by the two TTL clocks, Row Address Strobe ($\overline{RAS}$) and Column Address Strobe ($\overline{CAS}$). Non-critical timing requirements for $\overline{RAS}$ and $\overline{CAS}$ allow use of the address multiplexing technique while maintaining high performance.

The M2118 three-state output is controlled by $\overline{CAS}$, independent of $\overline{RAS}$. After a valid read or read-modify-write cycle, data is latched on the output by holding $\overline{CAS}$ low. The data out pin is returned to the high impedance state by returning $\overline{CAS}$ to a high state.

The single transistor storage cell requires refreshing for data retention. Refreshing is accomplished by performing $\overline{RAS}$-only refresh cycles, or normal read or write cycles on the 128 address combinations of A_0 through A_6 during a 2ms period. A write cycle will refresh stored data on all bits of the selected row except the bit which is addressed.

PIN CONFIGURATION

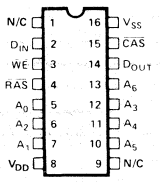

M2118

LOGIC SYMBOL

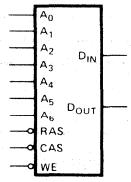

A_0-A_6	ADDRESS INPUTS
$\overline{CAS}$	COLUMN ADDRESS STROBE
D_{IN}	DATA IN
D_{OUT}	DATA OUT
$\overline{WE}$	WRITE ENABLE
$\overline{RAS}$	ROW ADDRESS STROBE
V_{DD}	POWER (+5V)
V_{SS}	GROUND

BLOCK DIAGRAM

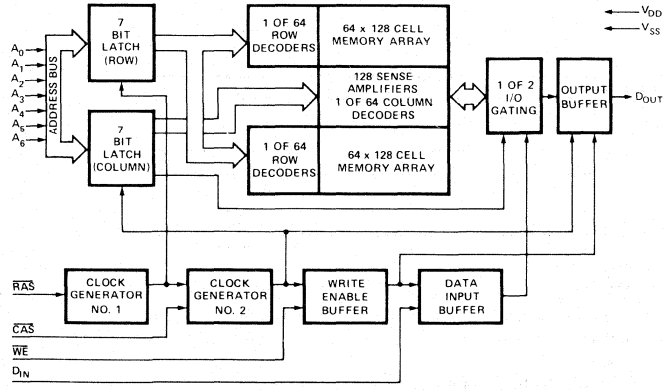

ABSOLUTE MAXIMUM RATINGS*

Ambient Temperature Under Bias .... −65°C to +95°C
Storage Temperature ..... −65°C to +150°C
Voltage on any Pin Relative to V_{SS} 7.5V
Data Out Current 50mA
Power Dissipation 1.0W

*COMMENT:
Stresses above those listed under "Absolute Maximum Rating" may cause permanent damage to the device. This is a stress rating only and functional operation of the device at these or at any other condition above those indicated in the operational sections of this specification is not implied. Exposure to absolute maximum rating conditions for extended periods may affect device reliability.

D.C. AND OPERATING CHARACTERISTICS [1]

T_A = −55°C to +85°C, V_{DD} = 5V ±10%, V_{SS} = 0V, unless otherwise noted.

Symbol	Parameter	Limits Min	Typ [2]	Max	Unit	Test Conditions	Notes
$\|I_{LI}\|$	Input Load Current (any input)		0.1	10	µA	V_{IN}=V_{SS} to V_{DD}	
$\|I_{LO}\|$	Output Leakage Current for High Impedance State		0.1	10	µA	Chip Deselected: $\overline{CAS}$ at V_{IH}, V_{OUT} = 0 to 5.5V	
I_{DD1}	V_{DD} Supply Current, Standby		1.2	2	mA	$\overline{CAS}$ and $\overline{RAS}$ at V_{IH}	
I_{DD2}	V_{DD} Supply Current, Operating		21	25	mA	M2118-4, t_{RC} = t_{RCMIN}	3
			19	23	mA	M2118-7, t_{RC} = t_{RCMIN}	3
I_{DD3}	V_{DD} Supply Current; $\overline{RAS}$-Only Cycle		14	16	mA	M2118-4, t_{RC} = t_{RCMIN}	3
			12	14	mA	M2118-7, t_{RC} = t_{RCMIN}	3
I_{DD5}	V_{DD} Supply Current, Standby, Output Enabled		2	4	mA	$\overline{CAS}$ at V_{IL}, $\overline{RAS}$ at V_{IH}	3
V_{IL}	Input Low Voltage (all inputs)	-2.0		0.8	V		
V_{IH}	Input High Voltage (all inputs)	2.4		7.0	V		
V_{OL}	Output Low Voltage			0.4	V	I_{OL} = 4.2mA	
V_{OH}	Output High Voltage	2.4			V	I_{OH} = -5mA	

NOTES:
1. All voltages referenced to V_{SS}.
2. Typical values are for T_A = 25°C and nominal supply voltages.
3. I_{DD} is dependent on output loading when the device output is selected. Specified $I_{DD\ MAX}$ is measured with the output open.

CAPACITANCE [1]

T_A = 25°C, V_{DD} = 5V ±10%, V_{SS} = 0V, unless otherwise noted.

Symbol	Parameter	Typ	Max	Unit
C_{I1}	Address, Data In	3	5	pF
C_{I2}	$\overline{RAS}$, $\overline{CAS}$, $\overline{WE}$, Data Out	4	7	pF

NOTES:
1. Capacitance measured with Boonton Meter or effective capacitance calculated from the equation:
$C = \frac{I\Delta t}{\Delta V}$ with ΔV equal to 3 volts and power supplies at nominal levels.

A.C. CHARACTERISTICS [1,2,3]

$T_A = -55°C$ to $+85°C$, $V_{DD} = 5V \pm 10\%$, $V_{SS} = 0V$, unless otherwise noted.

READ, WRITE, READ-MODIFY-WRITE AND REFRESH CYCLES

Symbol	Parameter	M2118-4 Min.	M2118-4 Max.	M2118-7 Min.	M2118-7 Max.	Unit	Notes
t_{RAC}	Access Time From $\overline{RAS}$		120		150	ns	4,5
t_{CAC}	Access Time From $\overline{CAS}$		65		80	ns	4,5,6
t_{REF}	Time Between Refresh		2		2	ms	
t_{RP}	$\overline{RAS}$ Precharge Time	120		135		ns	
t_{CPN}	$\overline{CAS}$ Precharge Time(non-page cycles)	55		70		ns	
t_{CRP}	$\overline{CAS}$ to $\overline{RAS}$ Precharge Time	0		0		ns	
t_{RCD}	$\overline{RAS}$ to $\overline{CAS}$ Delay Time	25	55	25	70	ns	7
t_{RSH}	$\overline{RAS}$ Hold Time	85		105		ns	
t_{CSH}	$\overline{CAS}$ Hold Time	120		165		ns	
t_{ASR}	Row Address Set-Up Time	0		0		ns	
t_{RAH}	Row Address Hold Time	15		15		ns	
t_{ASC}	Column Address Set-Up Time	0		0		ns	
t_{CAH}	Column Address Hold Time	15		20		ns	
t_{AR}	Column Address Hold Time, to $\overline{RAS}$	70		90		ns	
t_T	Transition Time (Rise and Fall)	3	50	3	50	ns	8
t_{OFF}	Output Buffer Turn Off Delay	0	50	0	60	ns	

READ AND REFRESH CYCLES

t_{RC}	Random Read Cycle Time	270		320		ns	
t_{RAS}	$\overline{RAS}$ Pulse Width	140	10000	175	10000	ns	
t_{CAS}	$\overline{CAS}$ Pulse Width	65	10000	95	10000	ns	
t_{RCS}	Read Command Set-Up Time	0		0		ns	
t_{RCH}	Read Command Hold Time	0		0		ns	

WRITE CYCLE

t_{RC}	Random Write Cycle Time	270		320		ns	
t_{RAS}	$\overline{RAS}$ Pulse Width	140	10000	175	10000	ns	
t_{CAS}	$\overline{CAS}$ Pulse Width	65	10000	95	10000	ns	
t_{WCS}	Write Command Set-Up Time	0		0		ns	9
t_{WCH}	Write Command Hold Time	30		45		ns	
t_{WCR}	Write Command Hold Time, to $\overline{RAS}$	85		115		ns	
t_{WP}	Write Command Pulse Width	30		50		ns	
t_{RWL}	Write Command to $\overline{RAS}$ Lead Time	65		110		ns	
t_{CWL}	Write Command to $\overline{CAS}$ Lead Time	50		100		ns	
t_{DS}	Data-In Set-Up Time	0		0		ns	
t_{DH}	Data-In Hold Time	30		45		ns	
t_{DHR}	Data-In Hold Time, to $\overline{RAS}$	85		115		ns	

READ-MODIFY-WRITE CYCLE

t_{RWC}	Read-Modify-Write Cycle Time	320		410		ns	
t_{RRW}	RMW Cycle $\overline{RAS}$ Pulse Width	190	10000	265	10000	ns	
t_{CRW}	RMW Cycle $\overline{CAS}$ Pulse Width	120	10000	185	10000	ns	
t_{RWD}	$\overline{RAS}$ to $\overline{WE}$ Delay	120		150		ns	9
t_{CWD}	$\overline{CAS}$ to $\overline{WE}$ Delay	65		80		ns	9

NOTES:
1. All voltages referenced to V_{SS}.
2. Eight cycles are required after power up or prolonged periods (greater than 2ms) of $\overline{RAS}$ inactivity before proper device operation is achieved. Any 8 cycles which perform refresh are adequate for this purpose.
3. A.C. Characteristics assume $t_T = 5ns$.
4. Assume that $t_{RCD} \leq t_{RCD}$(max). If t_{RCD} is greater than t_{RCD} (max.) then t_{RAC} will increase by the amount that t_{RCD} exceeds t_{RCD} (max.).
5. Load = 2 TTL loads and 100pF
6. Assumes $t_{RCD} \geq t_{RCD}$ (max.).
7. t_{RCD}(max.) is specified as a reference point only. If t_{RCD} is less than t_{RCD} (max.) access time is t_{RAC}. If t_{RCD} is greater than t_{RCD} (max.) access time is $t_{RCD} + t_{CAC}$.
8. t_T is measured between V_{IH} (min.) and V_{IL} (max.).
9. t_{WCS}, t_{CWD} and t_{RWD} are specified as reference points only. If $t_{WCS} \geq t_{WCS}$ (min.) the cycle is an early write cycle and the data out pin will remain high impedance throughout the entire cycle. If $t_{CWD} \geq t_{CWD}$ (min.) and $t_{RWD} \geq t_{RWD}$ (min.), the cycle is a read-modify-write cycle and the data out will contain the data read from the selected address. If neither of the above conditions is satisfied, the condition of the data out is indeterminate.

WAVEFORMS

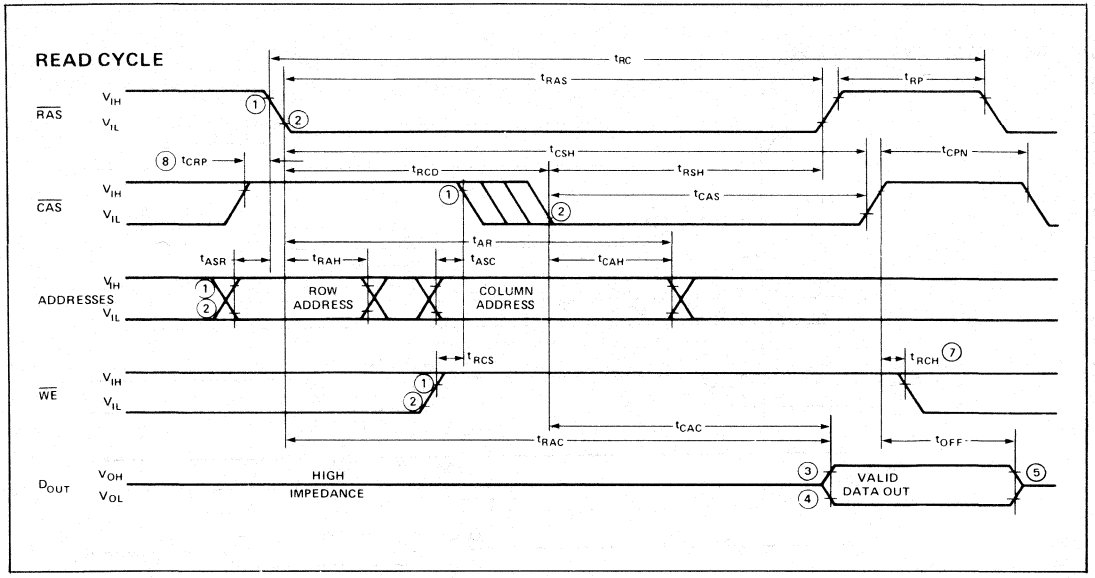

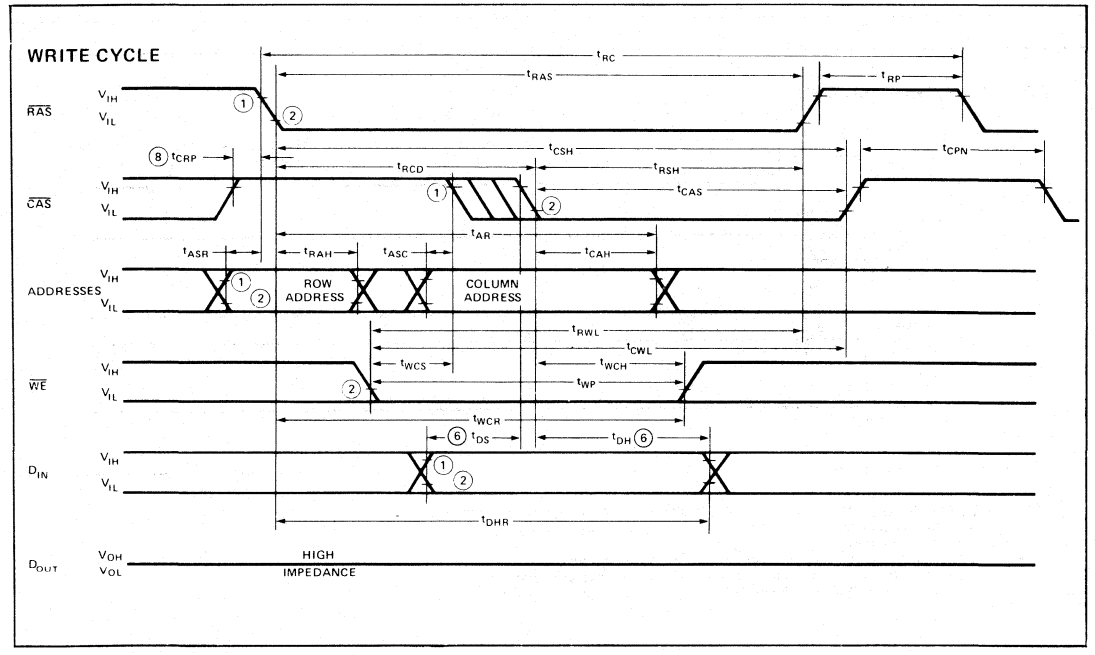

NOTES: 1,2. $V_{IH\ MIN}$ AND $V_{IL\ MAX}$ ARE REFERENCE LEVELS FOR MEASURING TIMING OF INPUT SIGNALS.
3,4. $V_{OH\ MIN}$ AND $V_{OL\ MAX}$ ARE REFERENCE LEVELS FOR MEASURING TIMING OF D_{OUT}.
5. t_{OFF} IS MEASURED TO $I_{OUT} \leq |I_{LO}|$.
6. t_{DS} AND t_{DH} ARE REFERENCED TO $\overline{CAS}$ OR $\overline{WE}$, WHICHEVER OCCURS LAST.
7. t_{RCH} IS REFERENCED TO THE TRAILING EDGE OF $\overline{CAS}$ OR $\overline{RAS}$, WHICHEVER OCCURS FIRST.
8. t_{CRP} REQUIREMENT IS ONLY APPLICABLE FOR $\overline{RAS}$/$\overline{CAS}$ CYCLES PRECEEDED BY A $\overline{CAS}$-ONLY CYCLE (i.e., FOR SYSTEMS WHERE $\overline{CAS}$ HAS NOT BEEN DECODED WITH $\overline{RAS}$).

WAVEFORMS

READ-MODIFY-WRITE CYCLE

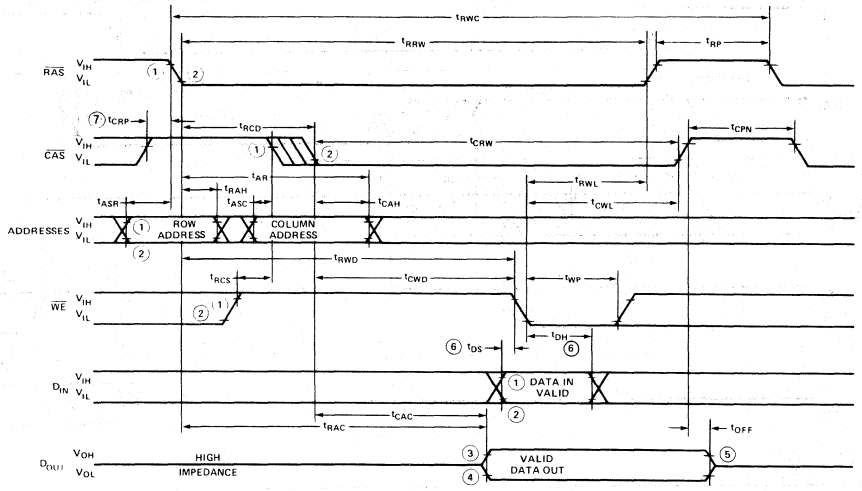

RAS-ONLY REFRESH CYCLE

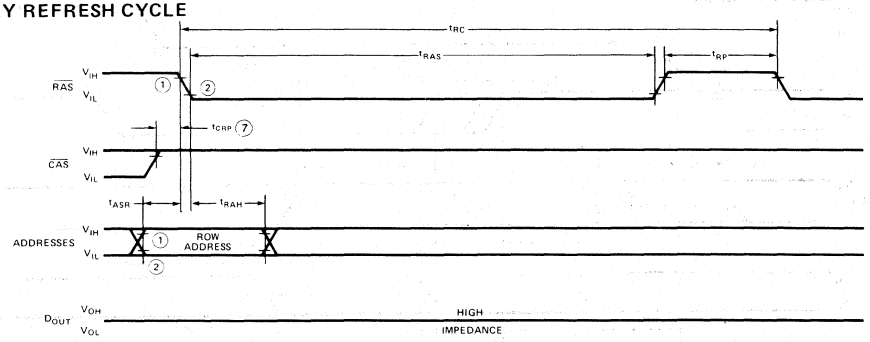

NOTES:
1,2. $V_{IH\ MIN}$ AND $V_{IL\ MAX}$ ARE REFERENCE LEVELS FOR MEASURING TIMING OF INPUT SIGNALS.
3,4. $V_{OH\ MIN}$ AND $V_{OL\ MAX}$ ARE REFERENCE LEVELS FOR MEASURING TIMING OF D_{OUT}.
5. t_{OFF} IS MEASURED TO $I_{OUT} \leq |I_{LO}|$.
6. t_{DS} AND t_{DH} ARE REFERENCED TO $\overline{CAS}$ OR $\overline{WE}$, WHICHEVER OCCURS LAST.
7. t_{CRP} REQUIREMENT IS ONLY APPLICABLE FOR $\overline{RAS}/\overline{CAS}$ CYCLES PRECEEDED BY A $\overline{CAS}$-ONLY CYCLE (i.e., FOR SYSTEMS WHERE $\overline{CAS}$ HAS NOT BEEN DECODED WITH $\overline{RAS}$).

PRELIMINARY

M2147H
HIGH SPEED 4096 x 1 BIT STATIC RAM
MILITARY

	M2147H-3	M2147H
Max. Access Time (ns)	55	70
Max. Active Current (mA)	180	180
Max. Standby Current (mA)	30	30

- **Pinout, Function, and Power Compatible to Industry Standard M2147**
- **HMOS II Technology**
- **Completely Static Memory—No Clock or Timing Strobe Required**
- **Equal Access and Cycle Times**
- **Single +5V Supply**
- **Direct Performance Upgrade for M2147**
- **Automatic Power-Down**
- **High Density 18-Pin Package**
- **Separate Data Input and Output**
- **Three-State Output**
- **Full Military Temperature Range −55°C to +125°C**

The Intel® M2147H is a 4096-bit static Random Access Memory organized as 4096 words by 1-bit using HMOS II, Intel's next generation high-performance MOS technology. It uses a uniquely innovative design approach which provides the ease-of-use features associated with non-clocked static memories and the reduced standby power dissipation associated with clocked static memories. To the user this means low standby power dissipation without the need for clocks, address setup and hold times, nor reduced data rates due to cycle times that are longer than access times.

$\overline{CS}$ controls the power-down feature. In less than a cycle time after $\overline{CS}$ goes high—deselecting the M2147H—the part automatically reduces its power requirements and remains in this low power standby mode as long as $\overline{CS}$ remains high. This device feature results in system power savings as great as 85% in larger systems, where the majority of devices are deselected.

The M2147H is placed in an 18-pin package configured with the industry standard pinout. It is directly TTL compatible in all respects: inputs, output, and a single +5V supply. The data is read out nondestructively and has the same polarity as the input data. A data input and a separate three-state output are used.

PIN CONFIGURATION

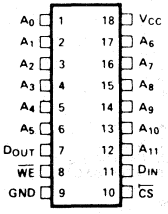

M2147H

LOGIC SYMBOL

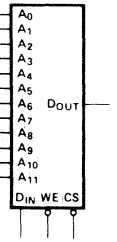

PIN NAMES

A_0–A_{11}	ADDRESS INPUTS	V_{CC}	POWER (+5V)
$\overline{WE}$	WRITE ENABLE	GND	GROUND
$\overline{CS}$	CHIP SELECT		
D_{IN}	DATA INPUT		
D_{OUT}	DATA OUTPUT		

TRUTH TABLE

$\overline{CS}$	$\overline{WE}$	MODE	OUTPUT	POWER
H	X	NOT SELECTED	HIGH Z	STANDBY
L	L	WRITE	HIGH Z	ACTIVE
L	H	READ	D_{OUT}	ACTIVE

BLOCK DIAGRAM

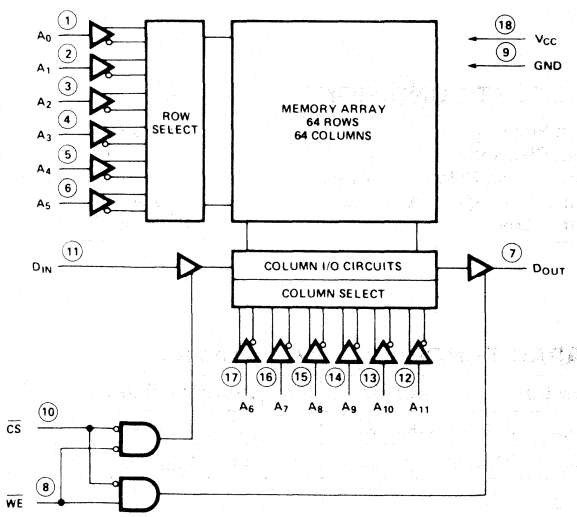

Intel Corporation assumes no responsibility for the use of any circuitry other than circuitry embodied in an Intel product. No other circuit patent licenses are implied.
© Intel Corporation, 1980

ABSOLUTE MAXIMUM RATINGS*

Temperature Under Bias ..... −65°C to +135°C
Storage Temperature ..... −65°C to +150°C
Voltage on Any Pin
With Respect to Ground ..... −3.5V to +7V
Power Dissipation 1.2W
D.C. Output Current ..... 20 mA

**COMMENT: Stresses above those listed under "Absolute Maximum Ratings" may cause permanent damage to the device. This is a stress rating only and functional operation of the device at these or any other conditions above those indicated in the operational sections of this specification is not implied. Exposure to absolute maximum rating conditions for extended periods may affect device reliability.*

D.C. AND OPERATING CHARACTERISTICS[1]

(T_A = −55°C to +125°C, V_{CC} = +5V ±10%, unless otherwise noted.)

Symbol	Parameter	M2147H-3, M2147H Min	Typ [2]	Max	Unit	Test Conditions
I_{LI}	Input Load Current (All Input Pins)		0.01	10	µA	V_{CC} = Max., V_{IN} = GND to V_{CC}
$\|I_{LO}\|$	Output Leakage Current		0.1	50	µA	$\overline{CS}$ = V_{IH}, V_{CC} = Max., V_{OUT} = GND to 4.5V
I_{CC}	Operating Current		120	170	mA	T_A = 25°C; V_{CC} = Max., $\overline{CS}$ = V_{IL}, Outputs Open
				180	mA	T_A = −55°C; V_{CC} = Max., $\overline{CS}$ = V_{IL}, Outputs Open
I_{SB}	Standby Current		18	30	mA	V_{CC} = Min. to Max., $\overline{CS}$ = V_{IH}
I_{PO}[3]	Peak Power-On Current		35	70	mA	V_{CC} = GND to V_{CC} Min. $\overline{CS}$ = Lower of V_{CC} or V_{IH} Min.
V_{IL}	Input Low Voltage	−3.0		0.8	V	
V_{IH}	Input High Voltage	2.0		6.0	V	
V_{OL}	Output Low Voltage			0.4	V	I_{OL} = 8 mA
V_{OH}	Output High Voltage	2.4			V	I_{OH} = −4.0 mA
I_{OS}	Output Short Circuit Current	−200		+200	mA	V_{OUT} = GND to V_{CC}, T_A = −55°C

NOTES:
1. The operating ambient temperature range is guaranteed with transverse air flow exceeding 400 linear feet per minute.
2. Typical limits are at V_{CC} = 5V, T_A = +25°C, and Load A.
3. A pull-up resistor to V_{CC} on the $\overline{CS}$ input is required to keep the device deselected; otherwise, power-on current approaches I_{CC} active.

A.C. TEST CONDITIONS

Input Pulse Levels	GND to 3.0V
Input Rise and Fall Times	5 ns
Input Timing Reference Levels	1.5V
Output Timing Reference Levels	0.8-2.0V
Output Load	See Load A

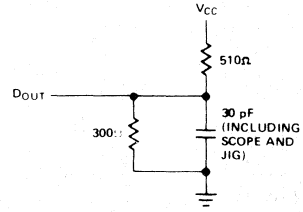

Load A

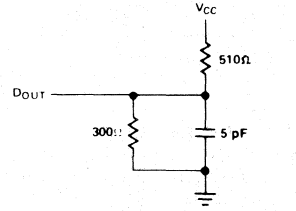

Load B

CAPACITANCE[4] (T_A = 25°C, f = 1.0 MHz)

Symbol	Parameter	Max	Unit	Conditions
C_{IN}	Input Capacitance	5	pF	V_{IN} = 0V
C_{OUT}	Output Capacitance	6	pF	V_{OUT} = 0V

NOTE:
4. This parameter is sampled and not 100% tested.

A.C. CHARACTERISTICS ($T_A = -55°C$ to $+125°C$, $V_{CC} = +5V \pm 10\%$, unless otherwise noted.)

Read Cycle

Symbol	Parameter	M2147H-3 Min	M2147H-3 Max	M2147H Min	M2147H Max	Unit	Test Conditions
t_{RC}[1]	Read Cycle Time	55		70		ns	
t_{AA}	Address Access Time		55		70	ns	
t_{ACS1}	Chip Select Access Time		55		70	ns	Note 8
t_{ACS2}	Chip Select Access Time		65		80	ns	Note 9
t_{OH}	Output Hold from Address Change	5		5		ns	
t_{LZ}[2,7]	Chip Selection to Output in Low Z	10		10		ns	Note 3
t_{HZ}[2,7]	Chip Deselection to Output in High Z	0	30	0	40	ns	Note 3
t_{PU}	Chip Selection to Power Up Time	0		0		ns	
t_{PD}	Chip Deselection to Power Down Time		20		30	ns	

WAVEFORMS

Read Cycle No. 1[4,5]

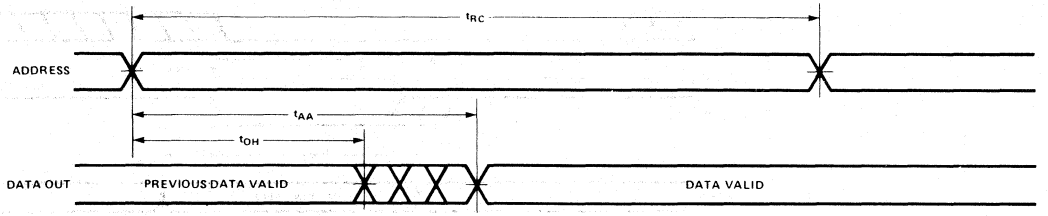

Read Cycle No. 2[4,6]

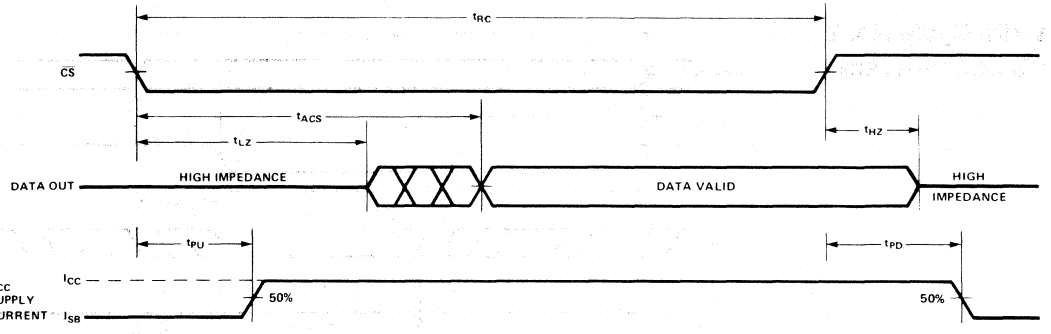

NOTES:
1. All Read Cycle timings are referenced from the last valid address to the first transitioning address.
2. At any given temperature and voltage condition, t_{HZ} max. is less than t_{LZ} min. both for a given device and from device to device.
3. Transition is measured ±500 mV from steady state voltage with Load B.
4. $\overline{WE}$ is high for Read Cycles.
5. Device is continuously selected, $\overline{CS} = V_{IL}$.
6. Addresses valid prior to or coincident with $\overline{CS}$ transition low.
7. This parameter is sampled and not 100% tested.
8. Chip deselected for greater than 55 ns prior to selection.
9. Chip deselected for a finite time that is less than 55 ns prior to selection. (If the deselect time is 0 ns, the chip is by definition selected and access occurs according to Read Cycle No. 1)

A.C. CHARACTERISTICS (Continued)
Write Cycle

Symbol	Parameter	M2147H-3 Min	M2147H-3 Max	M2147H Min	M2147H Max	Unit	Test Conditions
t_{WC}[2]	Write Cycle Time	55		70		ns	
t_{CW}	Chip Selection to End of Write	45		55		ns	
t_{AW}	Address Valid to End of Write	45		55		ns	
t_{AS}	Address Setup Time	0		0		ns	
t_{WP}	Write Pulse Width	25		40		ns	
t_{WR}	Write Recovery Time	10		15		ns	
t_{DW}	Data Valid to End of Write	25		30		ns	
t_{DH}	Data Hold Time	10		10		ns	
t_{WZ}	Write Enabled to Output in High Z	0	25	0	35	ns	Note 3
t_{OW}	Output Active from End of Write	0		0		ns	Note 3

WAVEFORMS
Write Cycle No. 1
($\overline{WE}$ CONTROLLED)[4]

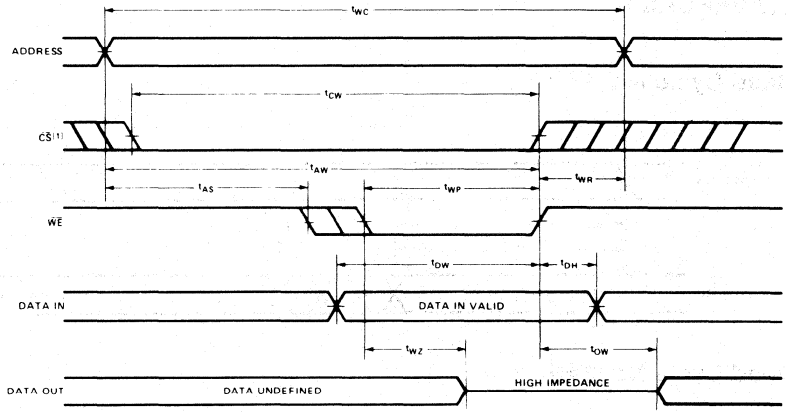

Write Cycle No. 2
($\overline{CS}$ CONTROLLED)[4]

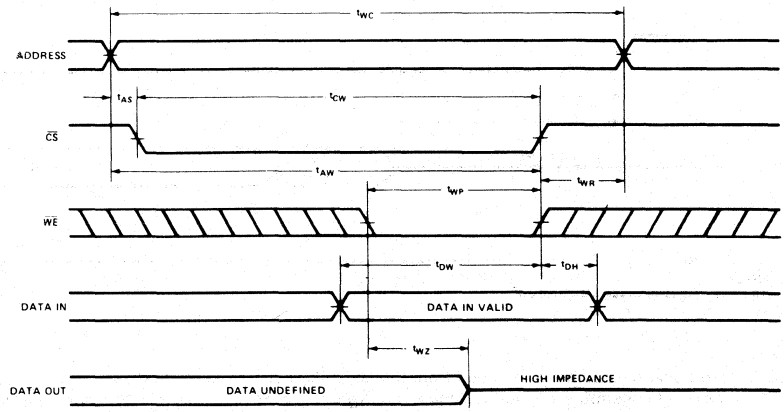

NOTES:
1. If $\overline{CS}$ goes high simultaneously with $\overline{WE}$ high, the output remains in a high impedance state.
2. All Write Cycle timings are referenced from the last valid address to the first transitioning address.
3. Transition is measured ±500 mV from steady state voltage with Load B.
4. $\overline{CS}$ or $\overline{WE}$ must be high during address transitions.

PRELIMINARY

M2148H
HIGH SPEED 1024 x 4 BIT STATIC RAM

MILITARY

	M2148H
Max. Access Time (ns)	70
Max. Active Current (mA)	180
Max. Standby Current (mA)	30

- HMOS II Technology
- Completely Static Memory—No Clock or Timing Strobe Required
- Equal Access and Cycle Times
- Single +5V Supply
- Automatic Power-Down
- High Density 18-Pin Package
- Industry Standard M2114A Pinout
- Common Data Input and Output
- Three-State Output
- Full Military Temperature Range −55°C to +125°C

The Intel® M2148H is a 4096-bit static Random Access Memory organized as 1024 words by 4 bits using HMOS II, a high-performance MOS technology. It uses a uniquely innovative design approach which provides the ease-of-use features associated with non-clocked static memories and the reduced standby power dissipation associated with clocked static memories. To the user this means low standby power dissipation without the need for clocks, address setup and hold times, nor reduced data rates due to cycle times that are longer than access times.

$\overline{CS}$ controls the power-down feature. In less than a cycle time after $\overline{CS}$ goes high—disabling the M2148H—the part automatically reduces its power requirements and remains in this low power standby mode as long as $\overline{CS}$ remains high. This device feature results in system power savings as great as 85% in larger systems, where the majority of devices are disabled.

The M2148H is placed in an 18-pin package configured with the industry standard 1K x 4 pinout. It is directly TTL compatible in all respects: inputs, outputs, and a single +5V supply. The data is read out nondestructively and has the same polarity as the input data.

PIN CONFIGURATION

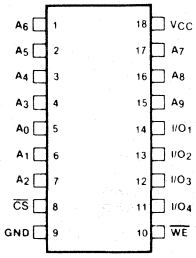

M2148H

LOGIC SYMBOL

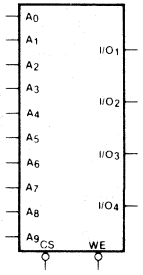

PIN NAMES

A_0-A_9	ADDRESS INPUTS
$\overline{WE}$	WRITE ENABLE
$\overline{CS}$	CHIP SELECT
I/O_1-I/O_4	DATA INPUT/OUTPUT
V_{CC}	POWER (+5V)
GND	GROUND

TRUTH TABLE

$\overline{CS}$	$\overline{WE}$	MODE	I/O	POWER
H	X	NOT SELECTED	HIGH-Z	STANDBY
L	L	WRITE	D_{IN}	ACTIVE
L	H	READ	D_{OUT}	ACTIVE

BLOCK DIAGRAM

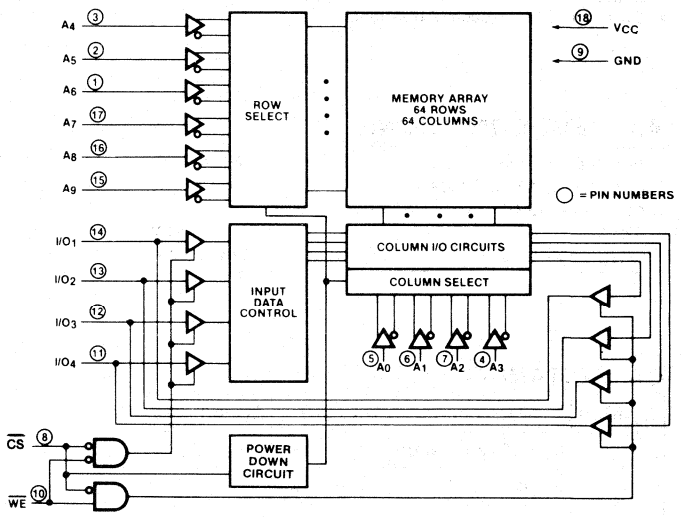

Intel Corporation assumes no responsibility for the use of any circuitry other than circuitry embodied in an Intel product. No other circuit patent licenses are implied.
© Intel Corporation, 1980

ABSOLUTE MAXIMUM RATINGS*

Temperature Under Bias ..... −65°C to +135°C
Storage Temperature ..... −65°C to +150°C
Voltage on Any Pin
With Respect to Ground ..... −3.5V to +7V
Power Dissipation 1.2W
D.C. Output Current ..... 20 mA

**COMMENT: Stresses above those listed under "Absolute Maximum Ratings" may cause permanent damage to the device. This is a stress rating only and functional operation of the device at these or any other conditions above those indicated in the operational sections of this specification is not implied. Exposure to absolute maximum rating conditions for extended periods may affect device reliability.*

D.C. AND OPERATING CHARACTERISTICS[1]

($T_A = -55°C$ to $+125°C$, $V_{CC} = +5V \pm 10\%$, unless otherwise noted.)

Symbol	Parameter	M2148H Min	M2148H Typ [2]	M2148H Max	Unit	Test Conditions
I_{LI}	Input Load Current (All Input Pins)		0.01	10	μA	V_{CC} = Max., V_{IN} = GND to V_{CC}
$\|I_{LO}\|$	Output Leakage Current		0.1	50	μA	$\overline{CS} = V_H$, V_{CC} = Max., V_{OUT} = GND to 4.5V
I_{CC}	Operating Current		120	180	mA	$T_A = -55°C$; V_{CC} = Max., $\overline{CS} = V_{IL}$, Outputs Open
I_{SB}	Standby Current		15	30	mA	V_{CC} = Min. to Max., $\overline{CS} = V_{IH}$
I_{PO}[3]	Peak Power-On Current		25	50	mA	V_{CC} = GND to V_{CC} Min. $\overline{CS}$ = Lower of V_{CC} or V_{IH} Min.
V_{IL}	Input Low Voltage	−3.0		0.8	V	
V_{IH}	Input High Voltage	2.1		6.0	V	
V_{OL}	Output Low Voltage			0.4	V	I_{OL} = 8 mA
V_{OH}	Output High Voltage	2.4			V	I_{OH} = −4.0 mA
I_{OS}[4]	Output Short Circuit Current		±200		mA	V_{OUT} = GND to V_{CC}

NOTES:
1. The operating ambient temperature range is guaranteed with transverse air flow exceeding 400 linear feet per minute.
2. Typical limits are at $V_{CC} = 5V$, $T_A = +25°C$, and Load A.
3. A pull-up resistor to V_{CC} on the $\overline{CS}$ input is required to keep the device deselected; otherwise, power-on current approaches I_{CC} active.
4. Duration not to exceed one second.

A.C. TEST CONDITIONS

Input Pulse Levels	GND to 3.0V
Input Rise and Fall Times	5 ns
Input and Output Timing Reference Levels	1.5V
Output Load	See Load A

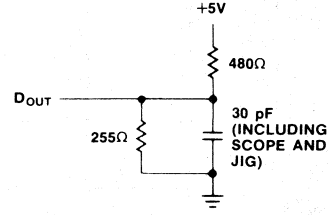

Load A

CAPACITANCE[4] ($T_A = 25°C$, f = 1.0 MHz)

Symbol	Parameter	Max.	Unit	Conditions
C_{IN}	Input Capacitance	5	pF	V_{IN} = 0V
$C_{I/O}$	Input/Output Capacitance	7	pF	$V_{I/O}$ = 0V

NOTE:
4. This parameter is sampled and not 100% tested.

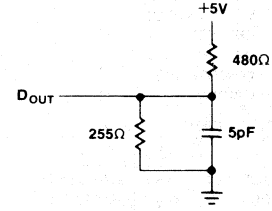

Load B

A.C. CHARACTERISTICS ($T_A = -55°C$ to $+125°C$, $V_{CC} = +5V \pm 10\%$ unless otherwise noted.)

Read Cycle

Symbol	Parameter	M2148H Min	M2148H Max	Unit	Test Conditions
t_{RC}	Read Cycle Time	70		ns	
t_{AA}	Address Access Time		70	ns	
t_{ACS1}	Chip Select Access Time		70	ns	Note 1
t_{ACS2}	Chip Select Access Time		80	ns	Note 2
t_{OH}	Output Hold from Address Change	5		ns	
t_{LZ}	Chip Selection Output in Low Z	20		ns	Note 6
t_{HZ}	Chip Deselection to Output in High Z	0	20	ns	Note 6
t_{PU}	Chip Selection to Power Up Time	0		ns	
t_{PD}	Chip Deselection to Power Down Time		30	ns	

WAVEFORMS

Read Cycle No. 1[3,4]

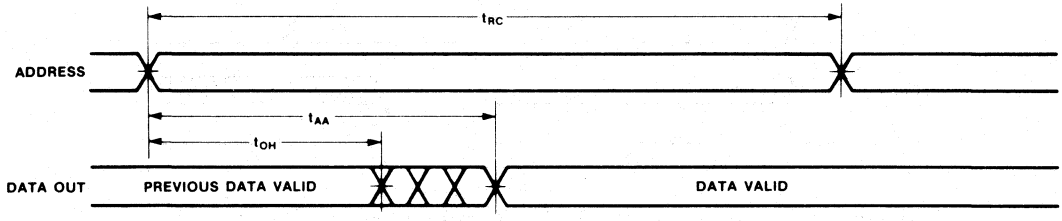

Read Cycle No. 2[3,5]

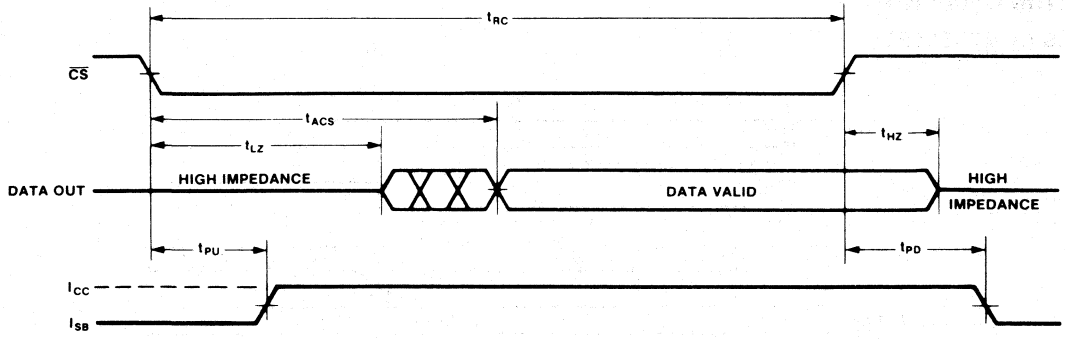

NOTES:

1. Chip deselected for greater than 55 ns prior to $\overline{CS}$ transition low.
2. Chip deselected for a finite time that is less than 55 ns prior to $\overline{CS}$ transition low. (If the deselect time is 0 ns, the chip is by definition selected and access occurs according to Read Cycle No. 1.)
3. $\overline{WE}$ is high for Read Cycles.
4. Device is continuously selected, $\overline{CS} = V_{IL}$.
5. Address valid prior to or coincident with $\overline{CS}$ transition low.
6. Transition is measured ±500 mV from high impedance voltage with Load B. This parameter is sampled and not 100% tested.

A.C. CHARACTERISTICS (Continued)

Write Cycle

Symbol	Parameter	M2148H Min	M2148H Max	Unit	Test Conditions
t_{WC}	Write Cycle Time	70		ns	
t_{CW}	Chip Selection to End of Write	65		ns	
t_{AW}	Address Valid to End of Write	65		ns	
t_{AS}	Address Setup Time	0		ns	
t_{WP}	Write Pulse Width	50		ns	
t_{WR}	Write Recovery Time	5		ns	
t_{DW}	Data Valid to End of Write	25		ns	
t_{DH}	Data Hold Time	0		ns	
t_{WZ}	Write Enabled to Output in High Z	0	25	ns	Note 2
t_{OW}	Output Active from End of Write	0		ns	Note 2

WAVEFORMS

Write Cycle No. 1

($\overline{WE}$ CONTROLLED)

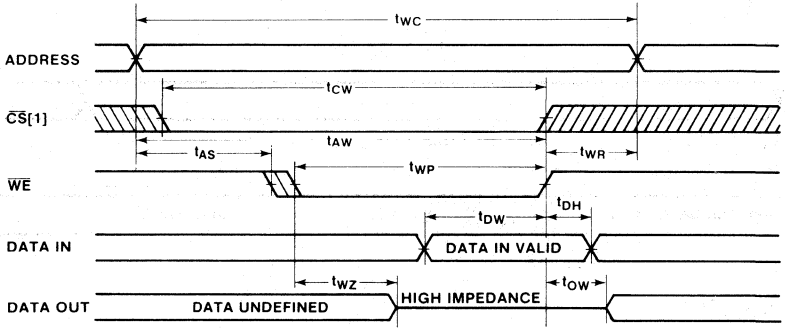

Write Cycle No. 2

($\overline{CS}$ CONTROLLED)

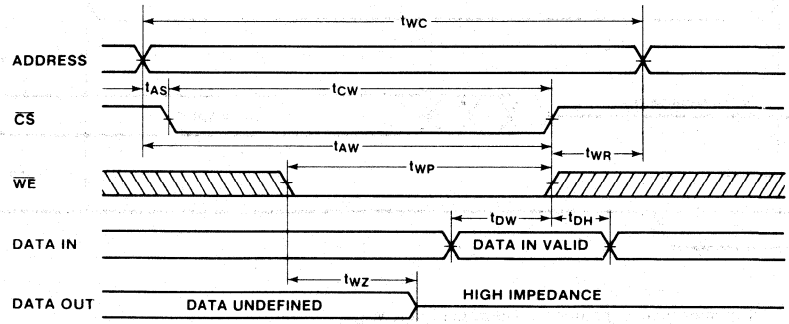

NOTES:
1. If $\overline{CS}$ goes high simultaneously with $\overline{WE}$ high, the output remains in a high impedance state.
2. Transition is measured ± 500 mV from high impedance voltage with Load B. This parameter is sampled and not 100% tested.

PRELIMINARY

M2167-10
HIGH SPEED 16,384 x 1 BIT STATIC RAM

MILITARY

Max Access Time (ns)	**100**
Max Active Current (mA)	**150**
Max Standby Current (mA)	**75**

- **M2147H Upgrade**
- **Double Poly HMOS II Technology**
- **Equal Access and Cycle Times**
- **Single +5V Supply**
- **Automatic Power Down**
- **Military Temperature Range: -55°C to +125°C**
- **0.8-2.0V Output Timing Reference Levels**
- **High Density 20-Pin Package**
- **Completely Static Memory—No Clock or Timing Strobe Required**
- **Separate Data Input and Output**
- **Three-State Output**

The Intel M2167 is a 16,384-bit static Random Access Memory organized as 16,384 words by 1 bit. This memory is fabricated using Intel's high-density, high-performance technology—Double Poly HMOS II. This state of the art technology brings high-density to high-performance static RAMs. The design of the M2167 offers a 4x density improvement over the industry standard M2147H with compatible performance. The M2167 offers the automatic power-down feature pioneered by the Intel M2147H.

$\overline{CS}$ controls the power-down feature. In less than a cycle time after $\overline{CS}$ goes high (deselecting the M2167), the part automatically reduces its power requirements and remains in this low power standby mode as long as $\overline{CS}$ remains high. This device feature results in system power savings as great as 50% in larger systems where the majority of devices are deselected.

The M2167 is placed in a 20-pin package configured with the industry standard 16K x 1 pinout, offering the industry's highest density 16K static RAM. It is directly TTL compatible in all respects: inputs, output, and a single +5V supply. The data is read out nondestructively and has the same polarity as the input data. A data input and a separate three-state output are used.

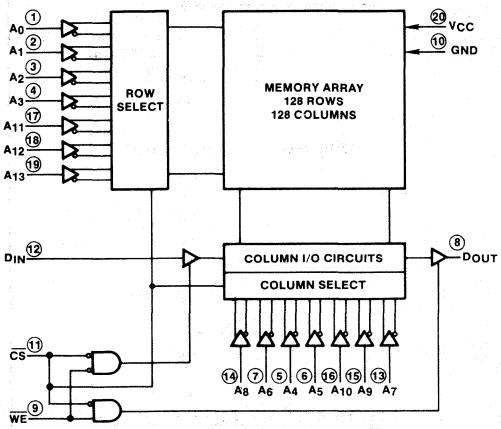

Figure 1. M2167-10 Block Diagram

PIN NAMES

A_0–A_{13}	ADDRESS INPUTS	V_{CC} POWER (+5V)
$\overline{WE}$	WRITE ENABLE	GND GROUND
$\overline{CS}$	CHIP SELECT	
D_{IN}	DATA INPUT	
D_{OUT}	DATA OUTPUT	

TRUTH TABLE

$\overline{CS}$	$\overline{WE}$	MODE	OUTPUT	POWER
H	X	NOT SELECTED	HIGH Z	STANDBY
L	L	WRITE	HIGH Z	ACTIVE
L	H	READ	D_{OUT}	ACTIVE

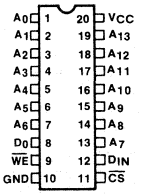

Figure 2. M2167-10 Pin Configuration

PIN	ADDRESS	FUNCTION
17	A_{11}	X_0
18	A_{12}	X_1
19	A_{13}	X_2
1	A_0	X_3
2	A_1	X_4
3	A_2	X_5
4	A_3	X_6
13	A_7	Y_0
7	A_6	Y_1
15	A_9	Y_2
6	A_5	Y_3
16	A_{10}	Y_4
5	A_4	Y_5
14	A_8	Y_6

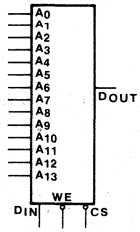

Figure 3. M2167-10 Logic Symbol

ABSOLUTE MAXIMUM RATINGS*

Temperature Under Bias ..... -65°C to 135°C
Storage Temperature ..... -65°C to +165°C
Voltage on Any Pin with Respect to Ground ..... -3.5V to +7V
Power Dissipation ..... 1.2 Watt
D.C. Output Current ..... 20 mA

**NOTICE: Stresses above those listed under "Absolute Maximum Ratings" may cause permanent damage to the device. This is a stress rating only and functional operation of the device at these or any other conditions above those indicated in the operational sections of this specification is not implied. Exposure to absolute maximum rating conditions for extended periods may affect device reliability.*

D.C. CHARACTERISTICS[1] (T_A = -55°C to +125°C; V_{CC} = +5V ± 10%, unless otherwise noted)

Symbol	Parameter	M2167-10 Min	M2167-10 Typ[2]	M2167-10 Max	Unit	Test Conditions
I_{LI}	Input Load Current (All Input Pins)		0.01	10	µA	V_{CC} = Max, V_{IN} = GND to V_{CC}
$\|I_{LO}\|$	Output Leakage Current		0.1	50	µA	$\overline{CS}$ = V_{IH}, V_{CC} = Max, V_{OUT} = GND to 4.5V
I_{CC}	Operating Current			150	mA	T_A = -55°C, V_{CC} = Max, $\overline{CS}$ = V_{IL}, Outputs Open
I_{SB}	Standby Current		60	75	mA	V_{CC} = Min. to Max, $\overline{CS}$ = V_{IH}
I_{PO}[3]	Peak Power-On Current		70	90	mA	V_{CC} = GND to V_{CC} Min., $\overline{CS}$ = Lower of V_{CC} or V_{IH} Min.
V_{IL}	Input Low Voltage	-3.0		0.8	V	
V_{IH}	Input High Voltage	2.0		6.0	V	
V_{OL}	Output Low Voltage			0.4	V	I_{OL} = 8 mA
V_{OH}	Output High Voltage	2.4			V	I_{OH} = -4.0 mA

Notes:
1. The operating ambient temperature is guaranteed with transverse air flow exceeding 400 linear feet per minute.
2. Typical limits are at V_{CC} = 5V, T_A = +25°C, and specified loading.
3. A pull-up resistor to V_{CC} on the $\overline{CS}$ input is required to keep the device deselected; otherwise, power-on current approaches I_{CC} active.

A.C. TEST CONDITIONS

Input Pulse Levels	GND to 3.0V
Input Rise and Fall Times	5 ns
Input Timing Reference Level	1.5V
Output Timing Reference Levels	0.8-2.0V
Output Load	See Figure 4

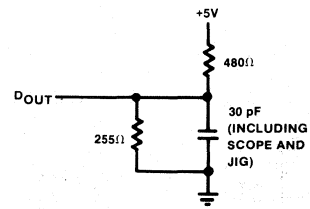

Figure 4. Output Load

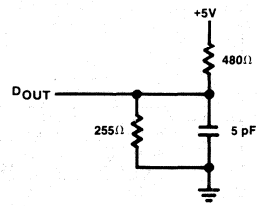

Figure 5. Output Load for t_{HZ}, t_{LZ}, t_{WZ}, t_{OW}

CAPACITANCE*

T_A = 25°C, f = 1.0 MHz

Symbol	Parameter	Max	Unit	Conditions
C_{IN}	Input Capacitance	7	pF	V_{IN} = 0V
C_{OUT}	Output Capacitance	6	pF	V_{OUT} = 0V

*This parameter is sampled and not 100% tested

A.C. CHARACTERISTICS (T_A = -55°C to 125°C, V_{CC} = 5V ± 10%, unless otherwise noted)

READ CYCLE

Symbol	Parameter	M2167-10 Min	M2167-10 Max	Unit
t_{RC}[1]	Read Cycle Time	100		ns
t_{AA}	Address Access Time		100	ns
t_{ACS}	Chip Select Access Time		100	ns
t_{OH}	Output Hold from Access Change	5		ns
t_{LZ}[2,3]	Chip Selection to Output in Low Z	10		ns
t_{HZ}[2,3]	Chip Deselection to Output in High Z	0	40	ns
t_{PU}	Chip Selection to Power-Up Time	55		ns
t_{PD}	Chip Deselection to Power-Down Time		80	ns

WAvEFORMS

READ CYCLE NO. 1[4,5]

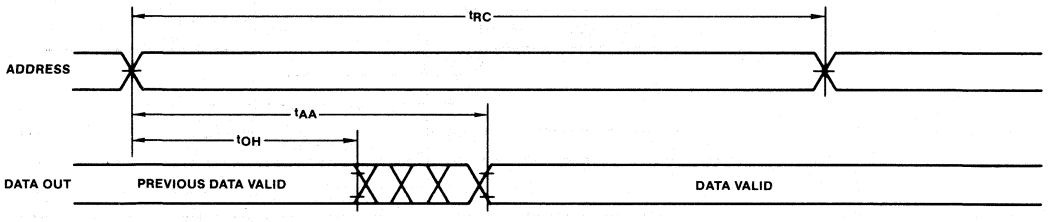

READ CYCLE NO. 2[4,6]

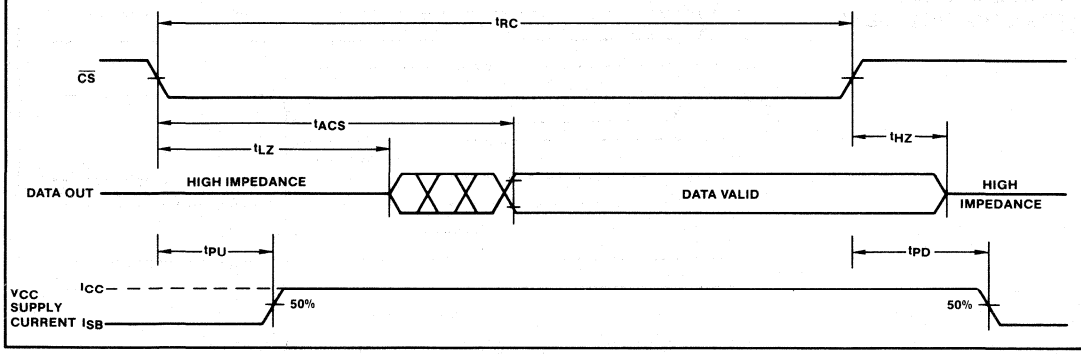

Notes:
1. All Read Cycle timings are referenced from the last valid address to the first transitioning address.
2. At any given temperature and voltage condition, t_{HZ} max is less than t_{LZ} min both for a given device and from device to device.
3. Transition is measured ± 500 mV from steady state voltage with specified loading in Figure 5. This parameter is sampled and not 100% tested.
4. $\overline{WE}$ is high for Read Cycles.
5. Device is continuously selected, $\overline{CS}$ = V_{IL}.
6. Addresses valid prior to or coincident with $\overline{CS}$ transition low.

A.C. CHARACTERISTICS (Continued)

WRITE CYCLE

Symbol	Parameter	M2167-10 Min	M2167-10 Max	Unit
t_{WC}[1]	Write Cycle Time	100		ns
t_{CW}	Chip Selection to End of Write	95		ns
t_{AW}	Address Valid to End of Write	95		ns
t_{AS}	Address Setup Time	0		ns
t_{WP}	Write Pulse Width	60		ns
t_{WR}	Write Recovery Time	5		ns
t_{DW}	Data Valid to End of Write	50		ns
t_{DH}	Data Hold Time	5		ns
t_{WZ}[2]	Write Enabled to Output in High Z	0	40	ns
T_{OW}	Output Active from End of Write	0		ns

WAVEFORMS

WRITE CYCLE #1 ($\overline{WE}$ CONTROLLED)[3]

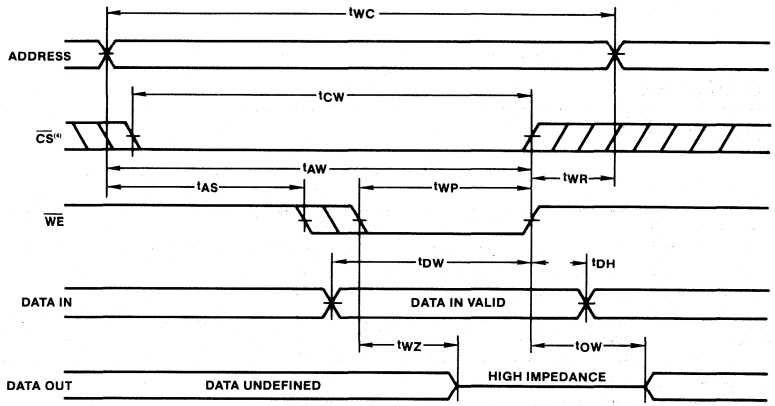

WRITE CYCLE #2 ($\overline{CS}$ CONTROLLED)[3]

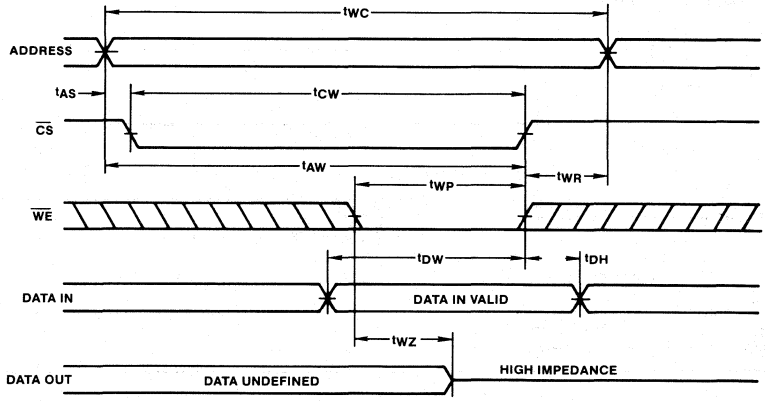

Notes:
1. All Write Cycle timings are referenced from the last valid address to the first transitioning address.
2. Transition is measured ± 500 mV from steady state voltage with specified loading in Figure 5. This parameter is sampled and not 100% tested.
3. $\overline{CS}$ or $\overline{WE}$ must be high during address transitions.
4. If $\overline{CS}$ goes high simultaneously with $\overline{WE}$ high, the output remains in a high impedance state.

M2716/M2716M
16K (2K x 8) UV ERASABLE PROM
MILITARY

- **Military Temperature Range**
  M2716M: −55°C to 125°C
  M2716: −55°C to 100°C
- **5V ±10% V_{CC}**
- **Pin Compatible to Intel's M2732 32K EPROM**
- **Fast Access Time; 450 ns maximum**
- **Static Standby Mode**
- **Low Power Dissipation of 165 mW maximum standby power**
- **Inputs and Outputs TTL Compatible during Read and Program**

The Intel® M2716M and M2716 are 16 384-bit ultraviolet erasable and electrically programmable read only memories (EPROMs) specified over the military and extended temperature range respectively. They operate from a single +5V power supply, have a static power-down mode, and feature fast, single-address location programming. It makes designing with EPROMs faster, easier and more economical. Both products are manufactured from the same dice. Except for the operating temperature range, both products have the same electrical and programming specifications.

The M2716/M2716M has a static standby mode which reduces the power dissipation without increasing access time. The active power dissipation is reduced by over 60% in the standby power mode. Both are pin compatible to Intel's 32K military EPROM, the M2732.

The M2716/M2716M has the simplest and fastest method devised yet for programming EPROMs—single pulse TTL level programming. No need for high voltage pulsing because all programming controls are handled by TTL signals. Program any location at any time—either individually, sequentially or at random, with the M2716's single-address location programming. Total programming time for all 16,384 bits is only 100 seconds.

PIN CONFIGURATIONS

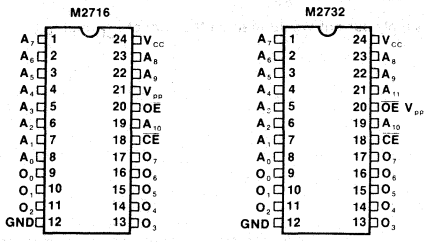

PIN NAMES

A_0–A_{10}	ADDRESSES
$\overline{CE}$/PGM	CHIP ENABLE/PROGRAM
$\overline{OE}$	OUTPUT ENABLE
O_0–O_7	OUTPUTS

MODE SELECTION

MODE \ PINS	$\overline{CE}$/PGM (18)	$\overline{OE}$ (20)	V_{PP} (21)	V_{CC} (24)	OUTPUTS (9-11, 13-17)
Read	V_{IL}	V_{IL}	+5	+5	D_{OUT}
Standby	V_{IH}	Don't Care	+5	+5	High Z
Program	Pulsed V_{IL} to V_{IH}	V_{IH}	+25	+5	D_{IN}
Program Verify	V_{IL}	V_{IL}	+25	+5	D_{OUT}
Program Inhibit	V_{IL}	V_{IH}	+25	+5	High Z

BLOCK DIAGRAM

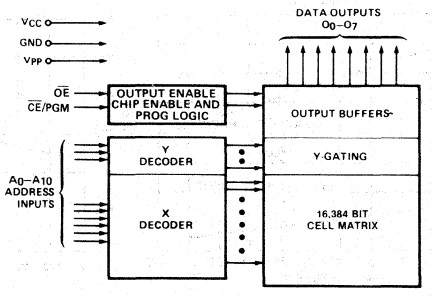

AFN-00846B
SEPTEMBER 1981

PROGRAMMING

The programming specifications are described in the Data Catalog PROM/ROM Programming Instructions Section

Absolute Maximum Ratings*

Temperature Under Bias ..... −65°C to + 135°C
Storage Temperature ..... −65°C to + 150°C
All Input or Output Voltages with Respect to Ground ..... + 6V to − 0.3V
V_{PP} Supply Voltage with Respect to Ground During Program ..... + 26.5V to − 0.3V

**Notice:*
Stresses above those listed under "Absolute Maximum Ratings" may cause permanent damage to the device. This is a stress rating only and functional operation of the device at these or any other conditions above those indicated in the operational sections of this specification is not implied. Exposure to absolute maximum rating conditions for extended periods may affect device reliability.

D.C. AND A.C. READ OPERATING CONDITIONS

	Temperature Range	V_{CC}	V_{PP}
M2716M	−55°C to + 125°C	5V ± 10%	V_{CC}
M2716	−55°C to + 100°C	5V ± 10%	V_{CC}

D.C. Characteristics

Symbol	Parameter	Limits			Unit	Conditions
		Min.	Typ[3]	Max.		
I_{LI}	Input Load Current			10	μA	V_{IN} = 5.5V
I_{LO}	Output Leakage Current			10	μA	V_{OUT} = 5.5V
I_{PP1}[2]	V_{PP} Current			5	mA	V_{PP} = 5.5V
I_{CC1}[2]	V_{CC} Current (Standby)		10	30	mA	$\overline{CE} = V_{IH}$, $\overline{OE} = V_{IL}$
I_{CC2}[2]	V_{CC} Current (Active)		57	115	mA	$\overline{OE} = \overline{CE} = V_{IL}$
V_{IL}	Input Low Voltage	−0.1		0.8	V	
V_{IH}	Input High Voltage	2.0		V_{CC} + 1	V	
V_{OL}	Output Low Voltage			0.45	V	I_{OL} = 2.1 mA
V_{OH}	Output High Voltage	2.4			V	I_{OH} = − 400 μA

NOTES: 1. V_{CC} must be applied simultaneously or before V_{PP} and removed simultaneously or after V_{PP}.

2. V_{PP} may be connected directly to V_{CC} except during programming. The supply current would then be the sum of I_{CC} and I_{PP1}.

3. Typical values are for T_A = 25°C and nominal supply voltages.

4. This parameter is only sampled and is not 100% tested.

Typical Characteristics

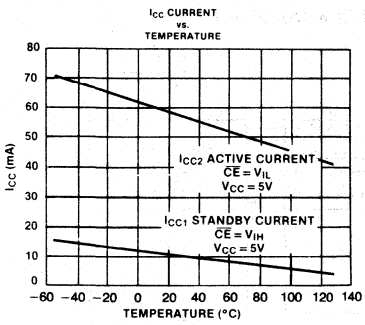

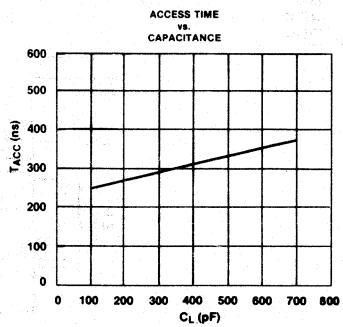

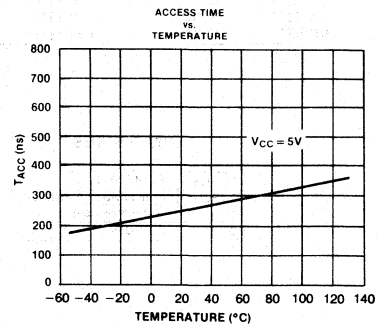

A.C. Characteristics

Symbol	Parameter	Limits			Unit	Test Conditions
		Min.	Typ.	Max.		
t_{ACC}	Address to Output Delay			450	ns	$\overline{CE} = \overline{OE} = V_{IL}$
t_{CE}	$\overline{CE}$ to Output Delay			450	ns	$\overline{OE} = V_{IL}$
t_{OE}	Output Enable to Output Delay			150	ns	$\overline{CE} = V_{IL}$
t_{DF}	Output Enable High to Output Float	0		130	ns	$\overline{CE} = V_{IL}$
t_{OH}	Output Hold From Addresses, $\overline{CE}$ or $\overline{OE}$ Whichever Occurred First	0			ns	$\overline{CE} = \overline{OE} = V_{IL}$

Capacitance[4] $T_A = 25°C$, f = 1 MHz

Symbol	Parameter	Typ.	Max.	Unit	Conditions
C_{IN}	Input Capacitance	4	6	pF	$V_{IN} = 0V$
C_{OUT}	Output Capacitance	8	12	pF	$V_{OUT} = 0V$

A.C. Test Conditions:

Output Load: 1 TTL gate and $C_L = 100$ pF
Input Rise and Fall Times: ≤20 ns
Input Pulse Levels: 0.8V to 2.2V
Timing Measurement Reference Level:
Inputs 1V and 2V
Outputs 0.8V and 2V

A.C. Waveforms[5]

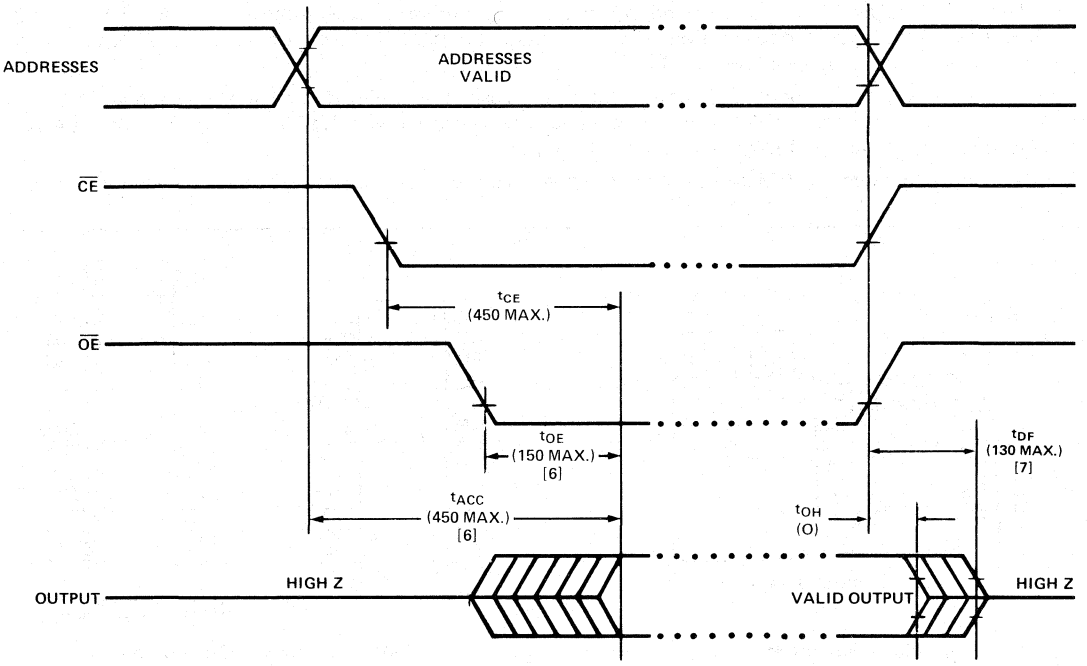

NOTES:
1. V_{CC} must be applied simultaneously or before V_{PP} and removed simultaneously or after V_{PP}.
2. V_{PP} may be connected directly to V_{CC} except during programming. The supply current would then be the sum of I_{CC} and I_{PP1}.
3. Typical values are for $T_A = 25°C$ and nominal supply voltages.
4. This parameter is only sampled and is not 100% tested.
5. All times shown in parentheses are minimum and are nsec unless otherwise specified.
6. $\overline{OE}$ may be delayed up to $t_{ACC} - t_{OE}$ after the falling edge of $\overline{CE}$ without impact on t_{ACC}.
7. t_{DF} is specified from $\overline{OE}$ or $\overline{CE}$, whichever occurs first.

M2732A
32K (4K x 8) UV ERASABLE PROM
MILITARY

- **450 ns Maximum Access Time...HMOS* -E Technology**
- **Compatible to High Speed 5MHz MiAPX 86/10 MPU ... Zero WAIT State**
- **Two Line Control**
- **Military Temperature Range: -55°C to +125°C**
- **Pin Compatible to M2764 EPROM**
- **Industry Standard Pinout...JEDEC Approved**
- **Low Standby Current...45 mA Max.**

The Intel M2732A is a 5V only, 32,768 bit ultraviolet erasable and electrically programmable read-only memory (EPROM). It is pin compatible to Intel's 450 ns M2732. The standard M2732A's access time is 450 ns. The access time is compatible to high performance microprocessors, such as the 5MHz MiAPX 86/10. In these systems, the M2732A allows the microprocessor to operate without the addition of WAIT states.

An important M2732A feature is the separate output control, Output Enable ($\overline{OE}$), from the Chip Enable control ($\overline{CE}$). The $\overline{OE}$ control eliminates bus contention in multiple bus microprocessor systems. Intel's Application Note AP-72 describes the microprocessor system implementation of the $\overline{OE}$ and $\overline{CE}$ controls on Intel's EPROMs. AP-72 is available from Intel's Literature Department.

The M2732A has a standby mode which reduces the power dissipation without increasing access time. The maximum active current is 150mA, while the maximum standby current is only 45mA, a 70% saving. The standby mode is achieved by applying a TTL-high signal to the $\overline{CE}$ input.

The M2732A is fabricated with HMOS-E technology, Intel's high speed N-channel MOS Silicon Gate Technology.

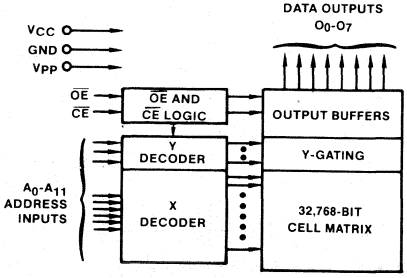

Figure 1. Block Diagram

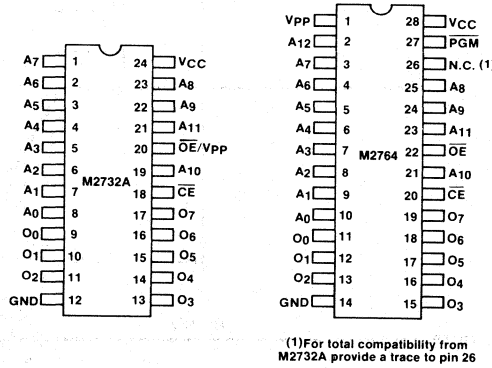

Figure 2. Pin Configurations

Mode Selection

MODE \ PINS	CE (18)	$\overline{OE}$/VPP (20)	VCC (24)	OUTPUTS (9-11, 13-17)
Read	VIL	VIL	+5	DOUT
Standby	VIH	Don't Care	+5	High Z
Program	VIL	VPP	+5	DIN
Program Verify	VIL	VIL	+5	DOUT
Program Inhibit	VIH	VPP	+5	High Z

Pin Names

A0-A11	ADDRESSES
$\overline{CE}$	CHIP ENABLE
$\overline{OE}$	OUTPUT ENABLE
O0-O7	OUTPUTS

M2764
64K (8K x 8) UV ERASABLE PROM
MILITARY

- **Military Temperature Range... -55° C to +125° C**
- **250 ns (M2764/S8462) Maximum Access Time... HMOS*-E Technology**
- **Compatible with 5MHz MiAPX 86/10 MPU... Zero WAIT State**
- **Two Line Control**
- **Pin Compatible with M2732 EPROM**
- **Industry Standard Pinout... JEDEC Approved**
- **Low Active Current... 100mA Max.**
- **± 10% V_{CC} Tolerance**

The Intel® M2764 is a 5V only, 65,536-bit ultraviolet erasable and electrically programmable read-only memory (EPROM). The M2764/S8463 access time is 450ns with speed selection available at 250ns for the M2764/S8462. The access time is compatible to high performance microprocessors, such as Intel's 5MHz MiAPX 86/10. In these systems, the M2764/S8462 allows the microprocessor to operate without the addition of WAIT states.

An important M2764 feature is the separate output control, Output Enable ($\overline{OE}$) from the Chip Enable control ($\overline{CE}$). The $\overline{OE}$ control eliminates bus contention in multiple bus microprocessor systems. Intel's Application Note AP-72 describes the microprocessor system implementation of the $\overline{OE}$ and $\overline{CE}$ controls on Intel's EPROMs. AP-72 is available from Intel's Literature Department. M2764/S8462 and M2764/S8463 require that activation of $\overline{OE}$ be delayed at least 100ns from the activation of $\overline{CE}$ or stable addresses, whichever occurs last, to permit operation over the entire Military temperature range.

The M2764 has a standby mode which reduces the power dissipation without increasing access time. The active current is 100mA, while the standby current is only 50mA. The standby mode is achieved by applying a TTL-high signal to the $\overline{CE}$ input.

The M2764 is fabricated with HMOS*-E technology, Intel's high-speed N-channel MOS Silicon Gate Technology.

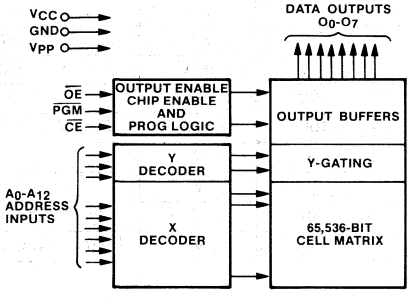

Figure 1. Block Diagram

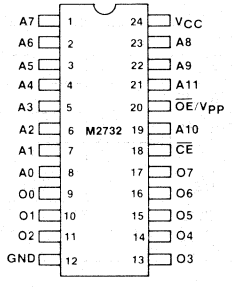

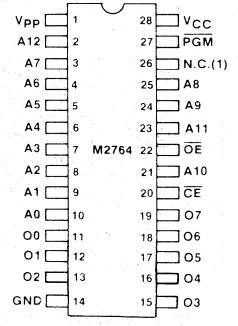

[1] For upgradability to JEDEC approved 128K EPROMs, provide an address line to pin 26. For compatability with the M2732 and 32K ROMs, provide a trace from V_{CC} to pin 26.

Figure 2. M2732 and M2764 Pin Configuration

MODE SELECTION

Mode \ Pins	CE (20)	OE (22)	PGM (27)	V_{PP} (1)	V_{CC} (28)	Outputs (11-13, 15-19)
Read	V_{IL}	V_{IL}	V_{IH}	V_{CC}	V_{CC}	D_{OUT}
Standby	V_{IH}	X	X	V_{CC}	V_{CC}	High Z
Program	V_{IL}	X	V_{IL}	V_{PP}	V_{CC}	D_{IN}
Program Verify	V_{IL}	V_{IL}	V_{IH}	V_{PP}	V_{CC}	D_{OUT}
Program Inhibit	V_{IH}	X	X	V_{PP}	V_{CC}	High Z

x can be either V_{IL} or V_{IH}

PIN NAMES

A_0-A_{12}	Addresses
$\overline{CE}$	Chip Enable
$\overline{OE}$	Output Enable
O_0-O_7	Outputs
$\overline{PGM}$	Program
N.C.	No Connect

*HMOS is a patented process of Intel Corporation.

The following are trademarks of Intel Corporation and its affiliates and may be used only to identify Intel products: i, Int$_e$l, INTEL, INTELLEC, MCS, ^{l}m, iCS, ICE, UPI, BXP, iSBC, iSBX, Insite, iRMX, System 2000, CREDIT, iRMX/80, MULTIBUS, PROMPT, Promware, Megachassis, Library Manager, MAIN MULTIMODULE, and the combination of MCS, ICE, iSBC, iRMX or iCS and a numerical suffix. © INTEL CORPORATION, 1981.

AUGUST 1981
AFN-01996A

The programming specifications are described in the Intel Component Data Catalog in the PROM/ROM programming instruction section.

ABSOLUTE MAXIMUM RATINGS*

Temperature Under Bias ..... -65°C to +135°C
Storage Temperature ..... -65°C to +150°C
All Input or Output Voltages with
Respect to Ground ..... +6V to -0.6V
V_{PP} Supply Voltage With Respect to Ground
During Programming ..... +22V to -0.6V

**NOTICE: Stresses above those listed under "Absolute Maximum Ratings" may cause permanent damage to the device. This is a stress rating only and functional operation of the device at these or any other conditions above those indicated in the operational sections of this specification is not implied. Exposure to absolute maximum rating conditions for extended periods may affect device reliability.*

D.C. AND A.C. OPERATING CONDITIONS DURING READ

	M2764/S8462	M2764/S8463
Operating Temperature Range	-55°C to +125°C	-55°C to +125°C
V_{CC} Power Supply[1,2]	5V ± 10%	5V ± 10%
V_{PP} Voltage[2]	$V_{PP} = V_{CC}$	$V_{PP} = V_{CC}$

Read Operation

D.C. CHARACTERISTICS

Symbol	Parameter	Limits			Unit	Conditions
		Min	Typ[3]	Max		
I_{LI}	Input Load Current			10	μA	$V_{IN} = 5.5V$
I_{LO}	Output Leakage Current			10	μA	$V_{OUT} = 5.5V$
I_{PP1}[2]	V_{PP} Current Read			5	mA	$V_{PP} = 5.5V$
I_{CC1}[2]	V_{CC} Current Standby			50	mA	$CE = V_{IH}$
I_{CC2}[2]	V_{CC} Current Active		70	100	mA	$CE = OE = V_{IL}$
V_{IL}	Input Low Voltage	-.1		+.6	V	
V_{IH}	Input High Voltage	2.0		$V_{CC} + 1$	V	
V_{OL}	Output Low Voltage			.45	V	$I_{OL} = 2.1$ mA
V_{OH}	Output High Voltage	2.4			V	$I_{OH} = -400$ μA

A.C. CHARACTERISTICS

Symbol	Parameter	M2764/S8462 Limits		M2764/S8463 Limits		Unit	Test Conditions
		Min	Max	Min	Max		
t_{ACC}	Address to Output Delay		250		450	ns	$CE = OE = V_{IL}$
t_{CE}	CE to Output Delay		250		450	ns	$OE = V_{IL}$
t_{OE}	OE to Output Delay		100		150	ns	$CE = V_{IL}$
t_{DF}[4]	OE High to Output Float	0	85	0	130	ns	$CE = V_{IL}$
t_{OH}	Output Hold from Addresses, CE or OE Whichever Occurred First	0		0		ns	$CE = OE = V_{IL}$

See Notes on Page 4.

SYSTEM TIMING REQUIREMENTS

Symbol	Parameter	M2764/S8462		M2764/S8463		Unit	Test Conditions
		Min	Max	Min	Max		
t_{AO}	Address to OE	100		100		ns	CE = V_{IL}
t_{CO}	CE to OE	100		100		ns	

CAPACITANCE T_A = 25°C, f = 1MHz

Symbol	Parameter	Typ[3]	Max.	Unit	Conditions
C_{IN}[4]	Input Capacitance	4	6	pF	V_{IN} = 0V
C_{OUT}	Output Capacitance	8	12	pF	V_{OUT} = 0V

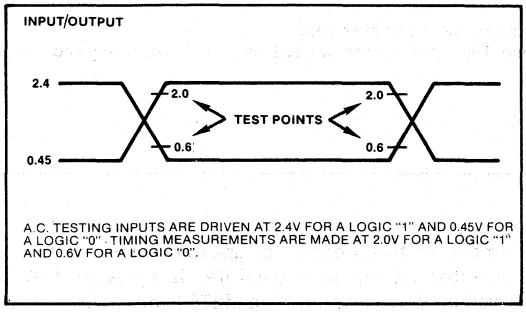

Figure 3. A.C. Testing Input, Output Waveform

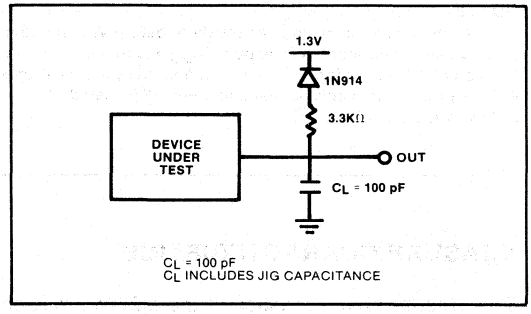

Figure 4. A.C. Testing Load Circuit

See Notes on Page 4.

A.C. WAVEFORMS

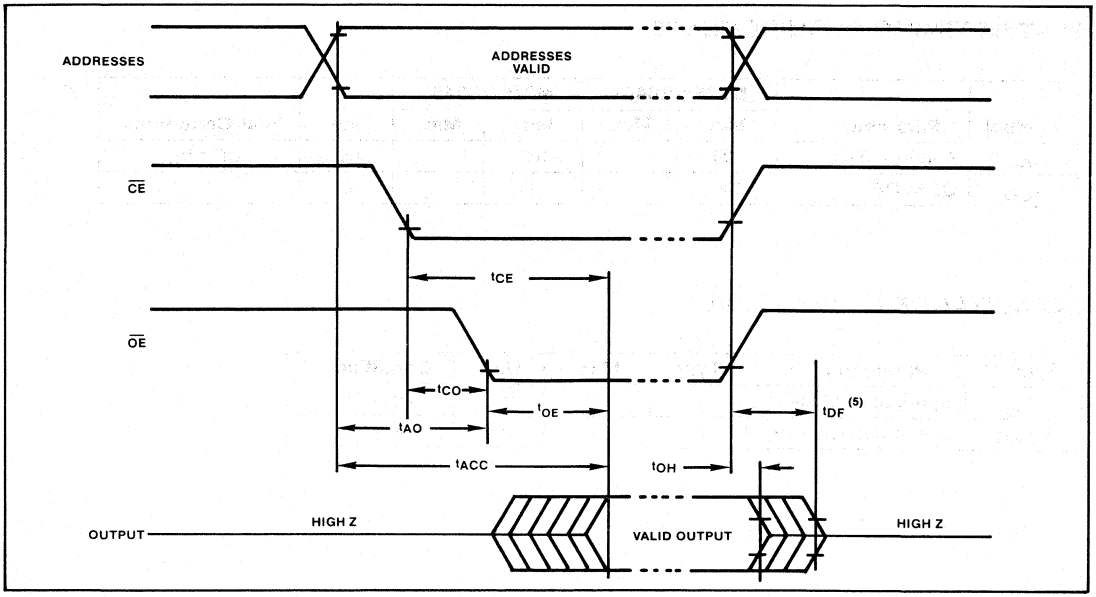

NOTES:
1. V_{CC} must be applied simultaneously or before V_{PP} and removed simultaneously or after V_{PP}.
2. V_{PP} may be connected directly to V_{CC} except during programming. The supply current would then be the sum of I_{CC} and I_{PP1}.
3. Typical values are for t_A = 25°C and nominal supply voltages.
4. This parameter is only sampled and not 100% tested.
5. t_{DF} is specified from $\overline{OE}$.

ERASURE CHARACTERISTICS

The erasure characteristics of the M2764 are such that erasure begins to occur when exposed to light with wavelengths shorter than approximately 4000 Angstroms (Å). It should be noted that sunlight and certain types of fluorescent lamps have wavelengths in the 3000-4000 Å range. Data show that constant exposure to room level fluorescent lighting could erase the typical M2764 in approximately 3 years, while it would take approximately 1 week to cause erasure when exposed to direct sunlight. If the M2764 is to be exposed to these types of lighting conditions for extended periods of time, opaque labels are available from Intel which should be placed over the M2764 window to prevent unintentional erasure.

The recommended erasure procedure for the M2764 is exposure to shortwave ultraviolet light which has a wavelength of 2537 Angstroms (Å). The integrated dose (i.e., UV intensity X exposure time) for erasure should be a minimum of 15 W-sec/cm^2. The erasure time with this dosage is approximately 15 to 20 minutes using an ultraviolet lamp with 12000 μW/cm^2 power rating. The M2764 should be placed within 1 inch of the lamp tubes during erasure. Some lamps have a filter on their tubes which should be removed before erasure.

DEVICE OPERATION

The five modes of operation of the M2764 are listed in Table 1. A single 5V power supply is required in the read mode. All inputs are TTL levels except for V_{PP}.

Table 1. Mode Selection

Mode \ Pins	$\overline{CE}$ (20)	$\overline{OE}$ (22)	$\overline{PGM}$ (27)	V_{PP} (1)	V_{CC} (28)	Outputs (11-13, 15-19)
Read	V_{IL}	V_{IL}	V_{IH}	V_{CC}	V_{CC}	D_{OUT}
Standby	V_{IH}	X	X	V_{CC}	V_{CC}	High Z
Program	V_{IL}	X	V_{IL}	V_{PP}	V_{CC}	D_{IN}
Program Verify	V_{IL}	V_{IL}	V_{IH}	V_{PP}	V_{CC}	D_{OUT}
Program Inhibit	V_{IH}	X	X	V_{PP}	V_{CC}	High Z

x can be either V_{IL} or V_{IH}

M2816
16K (2K x 8) ELECTRICALLY ERASABLE PROM

MILITARY

- **Full Military Temperature Range: −55°C to +125°C**
- **HMOS*-E FLOTOX Cell Design**
- **Reliable Floating Gate Technology**
- **Very Fast Access Time**
  —M2816, 350 ns Max.
  —M2816-4, 450 ns Max.
- **Single Byte Erase/Write Capability**
- **Fast Byte Erase/Write Time**
  —M2816, 50 ms Minimum
- **Conforms to JEDEC Byte-Wide Family Standard**
- **Microprocessor Compatible Architecture**
- **Low Current**
  —Active Current, 140 mA Max.
  —Standby Current, 60 mA Max.
- **Erase/Write Specifications Guaranteed−55°C to +125°C**

The Intel® M2816 is a 16,384 bit electrically eraseable programmable read-only memory (E^2PROM). The M2816 can be easily erased and reprogrammed on a byte basis. A chip erase function is also provided. The device operates from a 5-volt power supply in the read mode; writing and erasing are accomplished by providing a single 21-volt pulse.

The M2816, with its very fast read access speed, is compatible with high performance microprocessors such as the MiAPX 86/10. Using the fast access speed allows zero wait operation in large system configurations.

The electrical erase/write capability of the M2816 makes it ideal for a wide variety of applications requiring in-system, non-volatile erase and write. Never before has in-system alterability been possible with this combination of density, performance and flexibility. Any byte can be erased or written in 50 ms without affecting the data in any other byte. Alternatively, the entire memory can be erased in 50 ms allowing the total time to rewrite all 2K bytes to be cut by 50%. The M2816 provides a significant increase in flexibility allowing new applications (dynamic reconfiguration, continuous calibration) never before possible.

The M2816 E^2PROM possesses Intel's 2-line control architecture to eliminate bus contention in a system environment. A power down mode is also featured; in the standby mode power consumption is reduced by over 55% without increasing access time. The standby mode is achieved by applying a TTL-high signal to the CE input.

Byte erase and write are controlled entirely by TTL signal levels, yet require no control signals beyond CE and OE. For byte write a selected chip (CE = TTL low) senses the 21V V_{PP} pulse and automatically goes into write mode. Byte erase mode is identical to byte write except that data-in must be all logic ones (TTL-high). Never before has an in-system alteration of non-volatile information been implemented with such simple control.

*HMOS-E is a patented process of Intel Corporation.

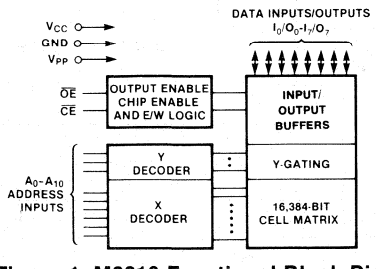

Figure 1. M2816 Functional Block Diagram

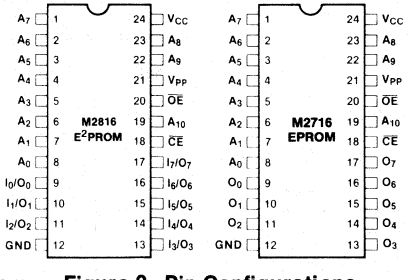

Figure 2. Pin Configurations

PIN NAMES

A_0-A_{10}	ADDRESSES
$\overline{CE}$	CHIP ENABLE
$\overline{OE}$	OUTPUT ENABLE
O_0-O_7	DATA OUTPUTS
I_0-I_7	DATA INPUTS
V_{PP}	PROGRAM VOLTAGE

Intel Corporation Assumes No Responsibilty for the Use of Any Circuitry Other Than Circuitry Embodied in an Intel Product. No Other Circuit Patent Licenses are Implied.
© INTEL CORPORATION, 1981.

ABSOLUTE MAXIMUM RATINGS*

Temperature Under Bias ..... −65°C to +135°C
Storage Temperature ..... −65°C to +150°C
All Input or Output Voltages with Respect to Ground ..... +6V to −0.3V
V_{PP} Supply Voltage with Respect to Ground During Write/Erase ..... +22.5V to −0.1V
Maximum Duration of V_{PP} Supply at 22V During E/W Inhibit ..... 24 Hrs.
Maximum Duration of V_{PP} Supply at 22V During Write/Erase ..... 100 ms[8]

NOTICE: Stresses above those listed under "Absolute Maximum Ratings" may cause permanent damage to the device. This is a stress rating only and functional operation of the device at these or any other conditions above those indicated in the operational sections of this specification is not implied. Exposure to absolute maximum rating conditions for extended periods may affect device reliability.

D.C. AND A.C. OPERATING CONDITIONS DURING READ AND WRITE

	M2816/S8442	M2816-4/S8442
Temperature Range	−55°C to +125°C	−55°C to +125°C
V_{CC} Power Supply[9]	5V ±10%	5V ± 10%

D.C. CHARACTERISTICS

READ

Symbol	Parameter	Limits			Units	Test Conditions
		Min	Typ [1]	Max		
I_{LI}	Input Leakage Current			10	μA	V_{IN} = 5.5V
I_{LO}	Output Leakage Current			10	μA	V_{OUT} = 5.5V
I_{CC2}	V_{CC} Current (Active)		90	140	mA	$\overline{OE}$ = $\overline{CE}$ = V_{IL}
I_{CC1}	V_{CC} Current (Standby)		35	60	mA	$\overline{CE}$ = V_{IH}
$I_{PP(R)}$	V_{PP} Current (Read)			5	mA	$\overline{CE}$ = V_{IL}, V_{PP} = 4 to 6
V_{IL}	Input Low Voltage	−0.1		.8	V	
V_{IH}	Input High Voltage	2.2		V_{CC}+1	V	
V_{OL}	Output Low Voltage			.45	V	I_{OL} = 2.1 mA
V_{OH}	Output High Voltage	2.4			V	I_{OH} = −400μA
V_{PP}	Read Voltage	4		6	V	

WRITE

Symbol	Parameter	Limits			Units	Test Conditions
		Min	Typ [1]	Max		
V_{PP}	Write/Erase Voltage	21		22	V	
$I_{PP(W)}$	V_{PP} Current (Byte Erase/Write)			15	mA	$\overline{CE}$ = V_{IL}
V_{OE}	$\overline{OE}$ Voltage (Chip Erase)	9		15	V	$I_{\overline{OE}}$ = 10μA
$I_{PP(I)}$	V_{PP} Current Inhibit			5	mA	V_{PP} = 22, CE = VIH
$I_{PP(C)}$	V_{PP} Current (Chip Erase)		3	5	mA	$\overline{CE}$ = V_{IL}

For footnotes see page 13.

CAPACITANCE[1] (T_A = 25°C, f = 1 MHz)

Symbol	Parameter	Typ	Max	Unit	Conditions
C_{IN}	Input Capacitance	5	10	pF	V_{IN}=0V
C_{OUT}	Output Capacitance		10	pF	V_{OUT}=0V
C_{VCC}	V_{CC} Capacitance		500	pF	CE=OE=V_{IH}
C_{VPP}	V_{PP} Capacitance		50	pF	CE=OE=V_{IH}

A.C. TEST CONDITIONS

Output Load: 1 TTL gate and C_L=100 pF
Input Pulse Levels: 0.45 to 2.4V
Timing Measurement Reference Level:
Input 1V and 2V
Output .8V and 2V

A.C. CHARACTERISTICS

READ

Symbol	Parameter	M2816			M2816-4			Unit	Test Conditions
		Min	Typ [1]	Max	Min	Typ [1]	Max		
t_{ACC}	Address to Output Delay		250	350		350	450	ns	$\overline{CE}$=$\overline{OE}$=V_{IL}
t_{CE}	$\overline{CE}$ to Output Delay		250	350		350	450	ns	$\overline{OE}$=V_{IL}
t_{OE}	Output Enable to Output Delay	10		120	10		140	ns	$\overline{CE}$=V_{IL}
t_{DF}	Output Enable High to Output Float	0		100	0		100	ns	$\overline{CE}$=V_{IL}
t_{OH}	Output Hold from Addresses, $\overline{CE}$ or $\overline{OE}$ Whichever Occurred First	0			0			ns	

WRITE

Symbol	Parameter	Limits			Units	Test Conditions
		Min	Typ [1]	Max		
t_{AS}	Add to V_{PP} Set-Up Time	150			ns	
t_{CS}	CE to V_{PP} Set-Up Time	150			ns	
t_{DS}[10]	Data to V_{PP} Set-Up Time	0			ns	
t_{DH}[10]	Data Hold Time	50			ns	V_{PP}=6V
t_{WP}[9]	Write Pulse Width/M2816	50		70	ms	
t_{WR}	Write Recovery Time	50			ns	V_{PP}=6V
t_{OS}	Chip Erase Set-Up Time	0			ns	V_{PP}=6V V_{OE}=9V
t_{OH}	Chip Erase Hold Time	0			ns	V_{PP}=6V V_{OE}=9V
t_{BOS}	Byte Erase/Write Set-Up Time	0			ns	V_{PP}=6V
t_{BOH}	Byte Erase/Write Set-Up Time	0			ns	V_{PP}=6V
t_{PRC}	V_{PP} RC Time Constant	450	600	750	μs	
t_{PFT}[7]	V_{PP} Fall Time			100	μs	V_{PP}=6V

For footnotes see page 13.

WAVEFORMS

READ

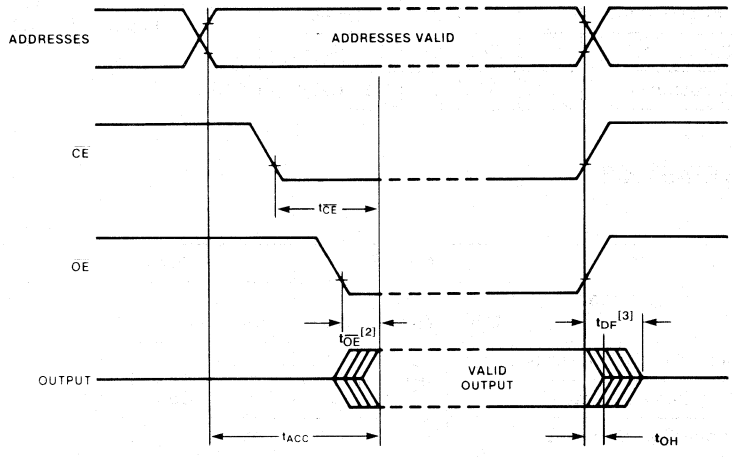

BYTE ERASE[5] OR WRITE

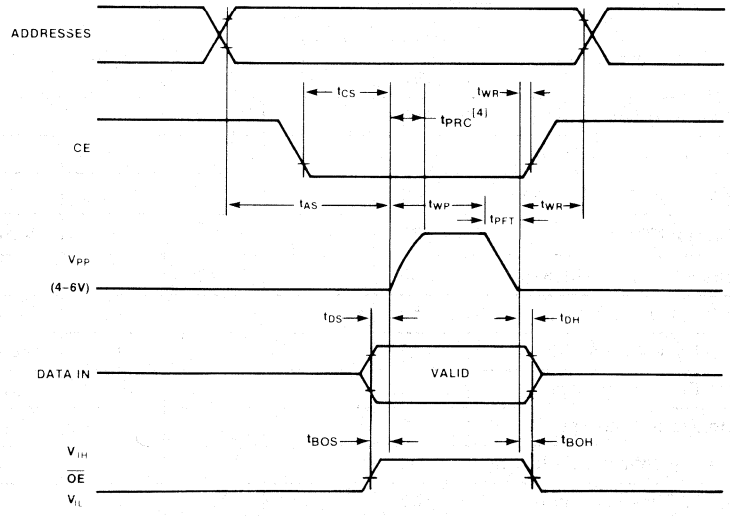

For footnotes see page 13.

WAVEFORMS (Continued)

CHIP ERASE[6]

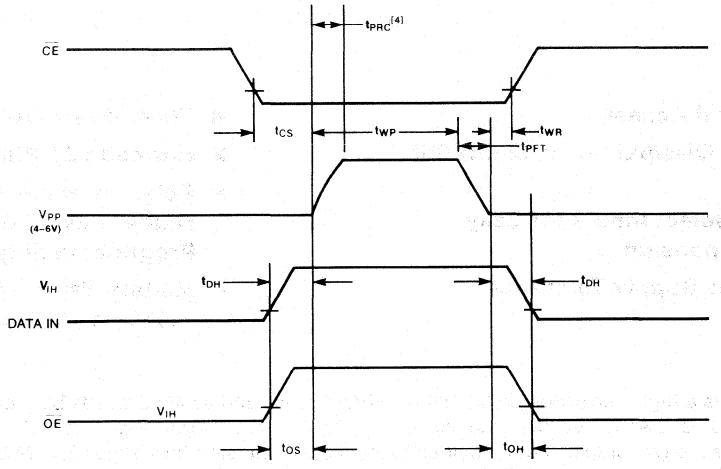

NOTES

1. This parameter is only sampled and not 100% tested.
2. OE may be delayed up to 230 ns after falling edge of CE without impact on T_{ACC} for M2816.
3. t_{DF} is specified from OE or CE whichever occurs first.
4. The rising edge of V_{PP} must follow an exponential waveform. That waveform's time constant is specified as t_{PRC}. See Intel's AP-102 for details.
5. Prior to a data write, an erase operation must be performed. For erase, data in = V_{IH}.
6. In the chip erase mode $D_{IN} = V_{IH}$.
7. To allow immediate read verify capability, V_{PP} can be driven low in less than 50 ns. See AP-101 for more information.
8. Adherence to t_{WP} specification is important to device reliability.
9. To prevent spurious device erasure or write, V_{CC} must be applied simultaneously or before 21 volt application of V_{PP}. V_{PP} cannot be driven to 21 volts without previously applying V_{CC}.
10. The data in set up and hold times for chip erase are identical to those specified for byte erase.
11. This switch includes automatic voltage shutdown on power fail.

M3632
32K (4K x 8) BIPOLAR PROM

MILITARY

- **35 ns Typical Access**
- **Low Power Dissipation: 0.02 mW/Bit Typically**
- **Two Chip Select Inputs for Easy Memory Expansion**
- **±10% Power Supply Tolerance**
- **Three-State Outputs**
- **Hermetic 24-Pin DIP**
- **Polycrystalline Silicon Fuses for Higher Fuse Reliability/Higher Programmability**
- **Military Temperature Range: -55° C to +125° C**

The Intel M3632 is a high performance 32,768-bit PROM organized as 4096 words by 8 bits. The worst case access time of 50 ns is specified over the -55°C to +125°C temperature range and 10% V_{CC} power supply tolerances. There are two chip selects provided to facilitate expansion into larger PROM arrays. The PROMs use the Schottky clamped TTL technology with polycrystalline silicon fuses. All outputs are initially high and logic low levels can be electrically programmed in selected bit locations.

The M3632 allows present 4K, 8K and 16K PROM users to significantly increase density without sacrificing performance. The M3632 is packaged in a hermetic 24 pin dual in-line package. The 32,768-bit PROM uses the most advanced technology available. As a result, the M3632 combines high performance, high density and lower power per bit than previous Bipolar PROM designs.

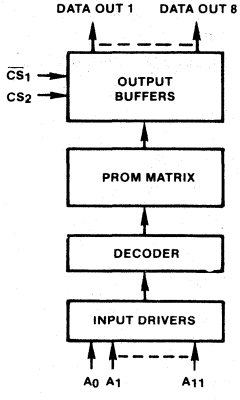

Figure 1. M3632 Block Diagram

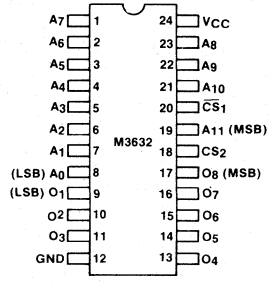

Pin Names

A0-A11	ADDRESS INPUTS
$\overline{CS}_1$, CS2	CHIP SELECT INPUTS(1)
O1-O8	DATA OUTPUTS

(1) To select the PROM $\overline{CS}_1 = V_{IL}$ and $CS_2 = V_{IH}$

Figure 2. M3632 Pin Configuration

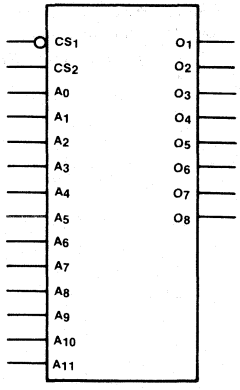

Figure 3. M3632 Logic Symbol

M3636
16K (2K x 8) BIPOLAR PROM

- −55°C to +125°C Operation
- Fast Access Time: 80ns Maximum
- Low Power Dissipation: 0.05mW/Bit Typically
- Three Chip Select Inputs for Easy Memory Expansion
- Pin Compatible to 8K PROMs
- Three-State Outputs
- Hermetic 24-Pin DIP
- Polycrystalline Silicon Fuses for Higher Fuse Reliability/Higher Programmability

The Intel® M3636 is a fully decoded 16,384 bit PROM organized as 2048 words by 8 bits. The worst case access time of 80 ns is specified over the −55°C to +125°C temperature range and 5% V_{CC} power supply tolerances. There are three chip selects provided to facilitate expansion into larger PROM arrays. The PROMs use the Schottky clamped TTL technology with polycrystalline silicon fuses. All outputs are initially high and logic low levels can be electrically programmed in selected bit locations.

Prior to the 16,384 bit M3636, the highest density bipolar PROM available was 8196 bits. The high density of the M3636 now easily doubles the capacity without an increase in area on existing designs currently using 1024 by 8-bit PROMs. There is also little, if any, penalty in power since the power/bit is approximately one-half that of 8K PROMs. The M3636 is packaged in a hermetic 24-pin dual in-line package.

PIN CONFIGURATION

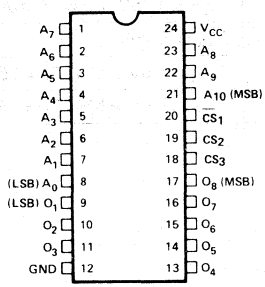

BLOCK DIAGRAM

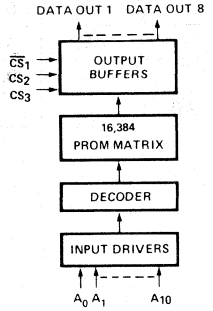

LOGIC SYMBOL

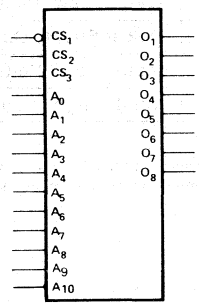

PIN NAMES

$A_0 - A_{10}$	ADDRESS INPUTS
$\overline{CS_1}$, CS_2, CS_3	CHIP SELECT INPUTS[1]
$O_1 - O_8$	DATA OUTPUTS

[1] To select the PROM $\overline{CS_1} = V_{IL}$ and $CS_2 = CS_3 = V_{IH}$

PROGRAMMING

The programming specifications are described in the PROM/ROM Programming section of the Data Catalog.

Absolute Maximum Ratings*

Temperature Under Bias ..... −65°C to +125°C
Storage Temperature ..... −65°C to +160°C
Output or Supply Voltages ..... −0.5V to 7 Volts
All Input Voltages ..... −1.5V to 5.5V
Output Currents 100mA

*COMMENT: Stresses above those listed under "Absolute Maximum Ratings" may cause permanent damage to the device. This is a stress rating only and functional operation of the device at these or any other conditions above those indicated in the operational sections of this specification is not implied. Exposure to absolute maximum rating conditions for extended periods may affect device reliability.

D.C. CHARACTERISTICS

All Limits Apply for $V_{CC} = +5.0V \pm 5\%$, $T_A = -55°C$ to $125°C$ unless otherwise specified

Symbol	Parameter	Limits				Test Conditions
		Min	Typ [1]	Max	Unit	
I_{FA}	Address Input Load Current		−0.05	−0.25	mA	$V_{CC} = 5.25V$, $V_A = 0.45V$
I_{FS}	Chip Select Input Load Current		−0.05	−0.25	mA	$V_{CC} = 5.25V$, $V_S = 0.45V$
I_{RA}	Address Input Leakage Current			40	μA	$V_{CC} = 5.25V$, $V_A = 5.25V$
I_{RS}	Chip Select Input Leakage Current			40	μA	$V_{CC} = 5.25V$, $V_S = 5.25V$
$\|I_O\|$	Output Leakage for High Impedance State			60	μA	$V_O = 5.25V$ or 0.45V, $V_{CC} = 5.25V$, $CS_1 = 2.4V$
I_{SC} [2]	Output Short Circuit Current	−20	−35	−100	mA	$V_O = 0V$
V_{CA}	Address Input Clamp Voltage		−0.9	−1.5	V	$V_{CC} = 4.75V$, $I_A = -10$ mA
V_{CS}	Chip Select Input Clamp Voltage		−0.9	−1.5	V	$V_{CC} = 4.75V$, $I_S = -10$ mA
V_{OH}	Output High Voltage	2.4	3.2V		V	$I_{OH} = -2.4$ mA, $V_{CC} = 4.75V$
V_{OL}	Output Low Voltage		0.3	0.45	V	$V_{CC} = 4.75V$, $I_{OL} = 10$ mA
I_{CC}	Power Supply Current		150	185	mA	$V_{CC} = 5.25V$
V_{IL}	Input "Low" Voltage			0.85	V	$V_{CC} = 5.0V \pm 5\%$, $T_A = 25°C$
V_{IH}	Input "High" Voltage	2.0			V	$V_{CC} = 5.0V \pm 5\%$, $T_A = 25°C$

Notes:
1. Typical values are for $T_A = 25°C$ and nominal supply voltages.
2. Unmeasured outputs are open during this test.

A.C. CHARACTERISTICS $V_{CC} = +5V \pm 5\%$, $T_A = -55°C$ to $125°C$

SYMBOL	PARAMETER	MAX. LIMITS	UNIT	CONDITIONS
T_A	Address to Output Delay	80	ns	$\overline{CS}_1 = V_{IL}$ and $CS_2 = CS_3 = V_{IH}$ to select the PROM.
t_{EN}	Output Enable Time	50	ns	
t_{DIS}	Output Disable Time	50	ns	

CAPACITANCE[1] $T_A = 25°C$, f = 1 MHz

SYMBOL	PARAMETER	TYP. LIMITS		UNIT	TEST CONDITIONS	
		TYP.	MAX.			
C_{INA}	Address Input Capacitance	4	10	pF	$V_{CC} = 5V$	$V_{IN} = 2.5V$
C_{INS}	Chip-Select Input Capacitance	6	10	pF	$V_{CC} = 5V$	$V_{IN} = 2.5V$
C_{OUT}	Output Capacitance	7	12	pF	$V_{CC} = 5V$	$V_{OUT} = 2.5V$

NOTE 1: This parameter is only periodically sampled and is not 100% tested.

SWITCHING CHARACTERISTICS

Conditions of Test:
Input pulse amplitudes 2.5V
Input pulse rise and fall times of
5 nanoseconds between 1 volt and 2 volts
Speed measurements are made at 1.5 volt levels
Output loading is 10 mA and 30 pF
Frequency of test – 2.5 MHz

10 mA TEST LOAD

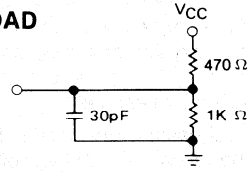

WAVEFORMS

ADDRESS TO OUTPUT DELAY

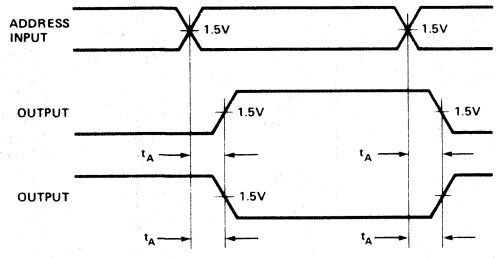

CHIP SELECT TO OUTPUT DELAY

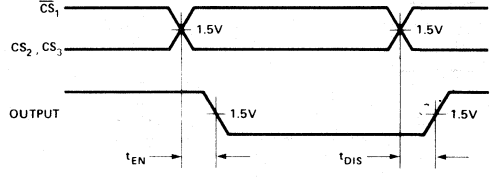

M8048/M8748/M8035L
SINGLE COMPONENT 8-BIT MICROCOMPUTER

MILITARY

- **8048 Mask Programmable ROM**
- **8748 User Programmable/Erasable EPROM**
- **8035L Requires External ROM or EPROM**

- **-55°C to +125°C 6 MHz Operation (M8048/M8035L)**
- **-55°C to +125°C 3.6 MHz Operation (M8748)**
- **8-Bit CPU, ROM, RAM, I/O in Single Package**
- **Interchangeable ROM and EPROM Versions**
- **Single 5V Supply**
- **2.5 μsec and 5.0 μsec Cycle Versions All Instructions 1 or 2 Cycles.**
- **Over 90 Instructions: 70% Single Byte**
- **1K x 8 ROM/EPROM 64 x 8 RAM 27 I/O Lines**
- **Interval Timer/Event Counter**
- **Easily Expandable Memory and I/O**
- **Compatible with 8080/8085 Series Peripherals**
- **Single Level Interrupt**
- **Screened to MIL-STD-883B**

The Intel M8048/M8748/M8035L are totally self-sufficient 8-bit parallel computers fabricated on single silicon chips using Intel's N-Channel silicon gate MOS process.

The M8048 contains an 8-bit CPU, a 1K × 8 program memory, a 64 × 8 RAM data memory, 27 I/O lines, and an 8-bit timer/counter in addition to on-board oscillator and clock circuits. For systems that require extra capability, the M8048 can be expanded using standard memories and MCS-80®/MCS-85® peripherals. The M8035L is the equivalent of an M8048 without program memory, and has the RAM power down mode of the M8048. To reduce development problems to a minimum and provide maximum flexibility, three interchangeable pin-compatible* versions of this single component micro-computer exist: the M8748 with user-programmable and erasable EPROM program memory for prototype and preproduction systems, the M8048 with factory-programmed mask ROM program memory for low cost, high volume production, and the M8035L without program memory for use with external program memories.

This microprocessor is designed to be an efficient controller as well as an arithmetic processor. The M8048 has extensive bit handling capability as well as facilities for both binary and BCD arithmetic. Efficient use of program memory results from an instruction set consisting mostly of single byte instructions and no instructions over 2 bytes in length.

*V_{DD} is used to program the M8748 and used for low power standby on the M8048/8035L.

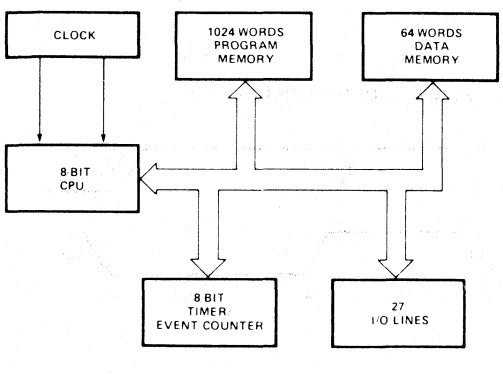

Figure 1. Block Diagram

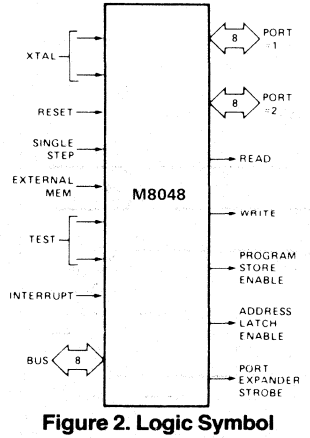

Figure 2. Logic Symbol

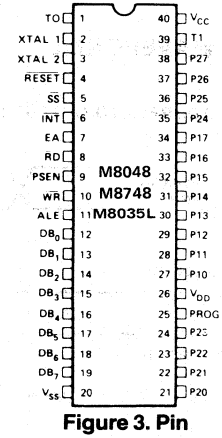

Figure 3. Pin Configuration

Intel Corporation Assumes No Responsibilty for the Use of Any Circuitry Other Than Circuitry Embodied in an Intel Product. No Other Circuit Patent Licenses are Implied.
©INTEL CORPORATION, 1980

AFN-00780A-01

WAVEFORMS

COMBINATION PROGRAM/VERIFY MODE (EPROM'S ONLY)

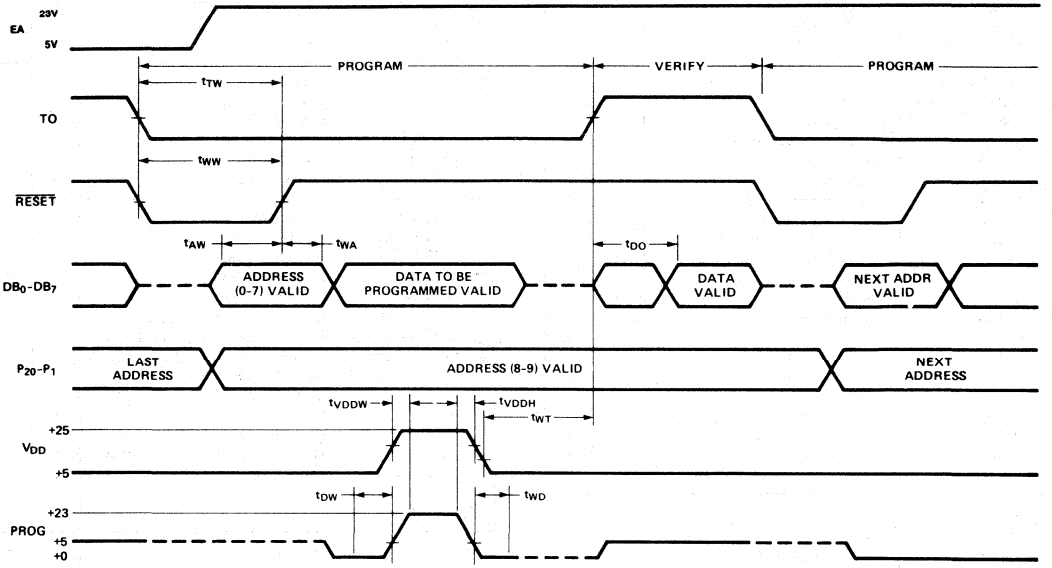

VERIFY MODE (ROM/EPROM)

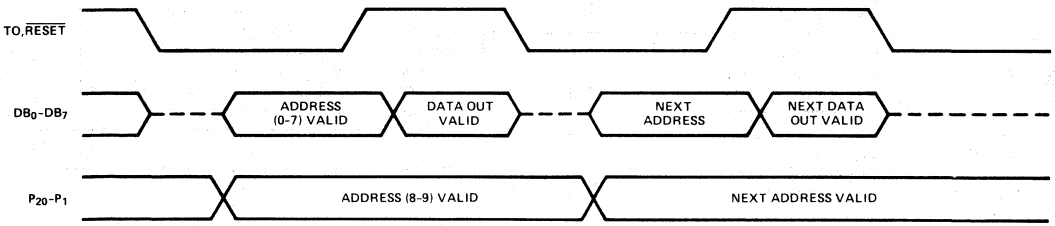

NOTES:
1. PROG MUST FLOAT IF EA IS LOW (i.e., ≠23V), OR IF T0 = 5V FOR THE 8748. FOR THE 8048 PROG MUST ALWAYS FLOAT.
2. X_1 AND X_2 DRIVEN BY 3 MHz CLOCK WILL GIVE 5μsec t_{CY}. THIS IS ACCEPTABLE FOR ALL PARTS.

The 8748 EPROM can be programmed by either of two Intel products:

1. PROMPT-48 Microcomputer Design Aid, or
2. Universal PROM Programmer (UPP Series) peripheral of the Intellec® Development System with a UPP-848 Personality Card.

Table 1. Instruction Set Summary

	Mnemonic	Description	Bytes	Cycle
Accumulator	ADD A, R	Add register to A	1	1
	ADD A, @R	Add data memory to A	1	1
	ADD A, #data	Add immediate to A	2	2
	ADDC A, R	Add register with carry	1	1
	ADDC A, @R	Add data memory with carry	1	1
	ADDC A, #data	Add immediate with carry	2	2
	ANL A, R	And register to A	1	1
	ANL A, @R	And data memory to A	1	1
	ANL A, #data	And immediate to A	2	2
	ORL A, R	Or register to A	1	1
	ORL A, @R	Or data memory to A	1	1
	ORL A, #data	Or immediate to A	2	2
	XRL A, R	Exclusive or register to A	1	1
	XRL A, @R	Exclusive or data memory to A	1	1
	XRL A, #data	Exclusive or immediate to A	2	2
	INC A	Increment A	1	1
	DEC A	Decrement A	1	1
	CLR A	Clear A	1	1
	CPL A	Complement A	1	1
	DA A	Decimal adjust A	1	1
	SWAP A	Swap nibbles of A	1	1
	RL A	Rotate A left	1	1
	RLC A	Rotate A left through carry	1	1
	RR A	Rotate A right	1	1
	RRC A	Rotate A right through carry	1	1
Input/Output	IN A, P	Input port to A	1	2
	OUTL P, A	Output A to port	1	2
	ANL P, #data	And immediate to port	2	2
	ORL P, #data	Or immediate to port	2	2
	INS A, BUS	Input BUS to A	1	2
	OUTL BUS, A	Output A to BUS	1	2
	ANL BUS, #data	And immediate to BUS	2	2
	ORL BUS, #data	Or immediate to BUS	2	2
	MOVD A, P	Input expander port to A	1	2
	MOVD P, A	Output A to expander port	1	2
	ANLD P, A	And A to expander port	1	2
	ORLD P, A	Or A to expander port	1	2
Registers	INC R	Increment register	1	1
	INC @R	Increment data memory	1	1
	DEC R	Decrement register	1	1
Branch	JMP addr	Jump unconditional	2	2
	JMPP @A	Jump indirect	1	2
	DJNZ R, addr	Decrement register and skip	2	2
	JC addr	Jump on carry = 1	2	2
	JNC addr	Jump on carry = 0	2	2
	JZ addr	Jump on A zero	2	2
	JNZ addr	Jump on A not zero	2	2
	JT0 addr	Jump on T0 = 1	2	2
	JNT0 addr	Jump on T0 = 0	2	2
	JT1 addr	Jump on T1 = 1	2	2
	JNT1 addr	Jump on T1 = 0	2	2
	JF0 addr	Jump on F0 = 1	2	2
	JF1 addr	Jump on F1 = 1	2	2
	JTF addr	Jump on timer flag	2	2
	JNI addr	Jump on $\overline{INT}$ = 0	2	2
	JBb addr	Jump on accumulator bit	2	2

	Mnemonic	Description	Bytes	Cycles
Subroutine	CALL addr	Jump to subroutine	2	2
	RET	Return	1	2
	RETR	Return and restore status	1	2
Flags	CLR C	Clear carry	1	1
	CPL C	Complement carry	1	1
	CLR F0	Clear flag 0	1	1
	CPL F0	Complement flag 0	1	1
	CLR F1	Clear flag 1	1	1
	CPL F1	Complement flag 1	1	1
Data Moves	MOV A, R	Move register to A	1	1
	MOV A, @R	Move data memory to a	1	1
	MOV A, #data	Move immediate to A	2	2
	MOV R, A	Move A to register	1	1
	MOV @R, A	Move A to data memory	1	1
	MOV R, #data	Move immediate to register	2	2
	MOV @R, #data	Move immediate to data memory	2	2
	MOV A, PSW	Move PSW to A	1	1
	MOV PSW, A	Move A to PSW	1	1
	XCH A, R	Exchange A and register	1	1
	XCHA, @R	Exchange A and data memory	1	1
	XCHD A, @R	Exchange nibble of A and register	1	1
	MOVX A, @R	Move external data memory to A	1	2
	MOVX @R, A	Move A to external data memory	1	2
	MOVP A, @A	Move to A from current page	1	2
	MOVP3 A, @A	Move to A from page 3	1	2
Timer/Counter	MOV A, T	Read timer/counter	1	1
	MOV T, A	Load timer/counter	1	1
	STRT T	Start timer	1	1
	STRT CNT	Start counter	1	1
	STOP TCNT	Stop timer/counter	1	1
	EN TCNTI	Enable timer/counter interrupt	1	1
	DIS TCNTI	Disable timer/counter interrupt	1	1
Control	EN I	Enable external interrupt	1	1
	DIS I	Disable external interrupt	1	1
	SEL RB0	Select register bank 0	1	1
	SEL RB1	Select register bank 1	1	1
	SEL MB0	Select memory bank 0	1	1
	SEL MB1	Select memory bank 1	1	1
	ENT0 CLK	Enable clock output on T0	1	1
	NOP	No operation	1	1

Mnemonics copyright Intel Corporation 1978

Table 2. Pin Description

Symbol	Pin No.	Function
V_{SS}	20	Circuit GND potential
V_{DD}	26	Programming power supply; +25V during program, +5V during operation for both ROM and PROM. Low power standby pin in 8048 and 8035L.
V_{CC}	40	Main power supply; +5V during operation and programming.
PROG	25	Program pulse (+23V) input pin during 8748 programming.
		Output strobe for 8243 I/O expander.
P10-P17 Port 1	27-34	8-bit quasi-bidirectional port.
P20-P27 Port 2	21-24 35-38	8-bit quasi-bidirectional port. P20-P23 contain the four high order program counter bits during an external program memory fetch and serve as a 4-bit I/O expander bus for 8243.
DB_0-DB_7 BUS	12-19	True bidirectional port which can be written or read synchronously using the RD, WR strobes. The port can also be statically latched.
		Contains the 8 low order program counter bits during an external program memory fetch, and receives the addressed instruction under the control of PSEN. Also contains the address and data during an external RAM data store instruction, under control of ALE, RD, and WR.
T0	1	Input pin testable using the conditional transfer instructions JT0 and JNT0. T0 can be designated as a clock output using ENT0 CLK instruction. T0 is also used during programming.
T1	39	Input pin testable using the JT1, and JNT1 instructions. Can be designated the timer/counter input using the STRT CNT instruction.

Symbol	Pin No.	Function
$\overline{INT}$	6	Interrupt input. Initiates an interrupt if interrupt is enabled. Interrupt is disabled after a reset. Also testable with conditional jump instruction. (Active low)
$\overline{RD}$	8	Output strobe activated during a BUS read. Can be used to enable data onto the bus from an external device.
		Used as a read strobe to external data memory. (Active low)
$\overline{RESET}$	4	Input which is used to initialize the processor. Also used during PROM programming verification, and power down. (Active low) (Non TTL V_{IH})
$\overline{WR}$	10	Output strobe during a bus write. (Active low)
		Used as write strobe to external data memory.
ALE	11	Address latch enable. This signal occurs once during each cycle and is useful as a clock output.
		The negative edge of ALE strobes address into external data and program memory.
$\overline{PSEN}$	9	Program store enable. This output occurs only during a fetch to external program memory. (Active low)
$\overline{SS}$	5	Single step input can be used in junction with ALE to "single step" the processor through each instruction. (Active low)
EA	7	External access input which forces all program memory fetches to reference external memory. Useful for emulation and debug, and essential for testing and program verification. (Active high)
XTAL1	2	One side of crystal input for internal oscillator. Also input for external source. (Non TTL V_{IH})
XTAL2	3	Other side of crystal input.

WAVEFORMS

Instruction Fetch From External Program Memory

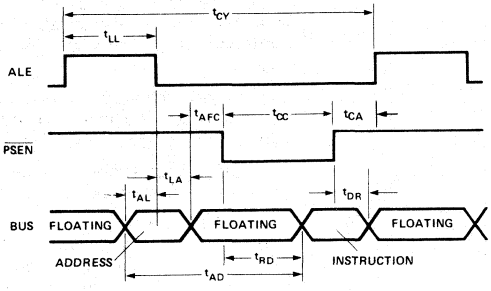

Read From External Data Memory

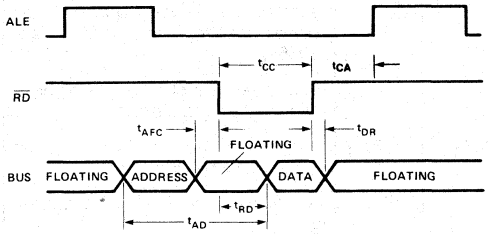

Write to External Data Memory

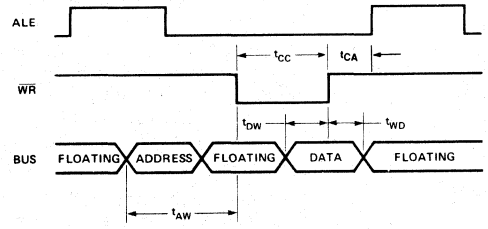

Input and Output Waveforms for A.C. Tests

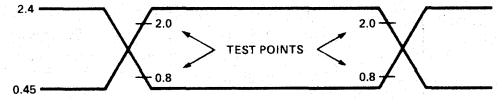

A.C. CHARACTERISTICS T_A = -55°C to 125°C, $V_{CC} = V_{DD}$ = +5V ± 10%, V_{SS} = 0V

Symbol	Parameter	M8048 M8035L		M8748		Unit	Conditions (Note 1)
		Min.	Max.	Min.	Max.		
t_{LL}	ALE Pulse Width	200		300		ns	
t_{AL}	Address Setup to ALE	120		120		ns	
t_{LA}	Address Hold from ALE	80		80		ns	
t_{CC}	Control Pulse Width ($\overline{PSEN}$, $\overline{RD}$, $\overline{WR}$)	400		600		ns	
t_{DW}	Data Setup before $\overline{WR}$	420		600		ns	
t_{WD}	Data Hold After $\overline{WR}$	80		120		ns	C_L = 20pF
t_{CY}	Cycle Time	2.5	15.0	4.17	15.0	μs	(3.6 MHz XTAL 8748)
t_{DR}	Data Hold	0	200	0	200	ns	
t_{RD}	$\overline{PSEN}$, $\overline{RD}$ to Data In		400		600	ns	
t_{AW}	Address Setup to $\overline{WR}$	230		260		ns	
t_{AD}	Address Setup to Data In		600		900	ns	
t_{AFC}	Address Float to $\overline{RD}$, $\overline{PSEN}$	-40		-60		ns	
t_{CA}	Control Pulse to ALE	10		10		ns	

Note 1: Control outputs: C_L = 80 pF t_{CY} = 2.5 μs for 8048/8035L
BUS Outputs: C_L = 150 pF 4.17 μs for 8748

ABSOLUTE MAXIMUM RATINGS*

Ambient Temperature Under Bias
8748 ..... −55°C to +125°C
8048/8035L ..... −55°C to +125°C
Storage Temperature ..... −65°C to +125°C
Voltage On Any Pin With Respect to Ground ..... −0.5 to +7V
Power Dissipation ..... 1.5 Watt

*NOTICE: Stresses above those listed under "Absolute Maximum Ratings" may cause permanent damage to the device. This is a stress rating only and functional operation of the device at these or any other conditions above those indicated in the operational sections of this specification is not implied.

D.C. CHARACTERISTICS $T_A = -55°C$ to $125°C$, $V_{CC} = V_{DD} = +5V \pm 10\%$, $V_{SS} = 0V$

Symbol	Parameter	Limits			Unit	Test Conditions
		Min.	Typ.	Max.		
V_{IL}	Input Low Voltage (All Except $\overline{RESET}$, X1, X2)	−.5		.7	V	
V_{IL1}	Input Low Voltage ($\overline{RESET}$, X1, X2)	−.5		.5	V	
V_{IH}	Input High Voltage (All Except XTAL1, XTAL2, $\overline{RESET}$)	2.3		V_{CC}	V	
V_{IH1}	Input High Voltage ($\overline{RESET}$, X1, X2)	3.8		V_{CC}	V	
V_{OL}	Output Low Voltage (BUS, $\overline{RD}$, $\overline{WR}$, $\overline{PSEN}$, ALE)			.45	V	$I_{OL} = 1.2mA$
V_{OL1}	Output Low Voltage (All Other Outputs)			.45	V	$I_{OL} = 0.8mA$
V_{OH}	Output High Voltage (BUS)	2.4			V	$I_{OH} = -240\mu A$
V_{OH1}	Output High Voltage ($\overline{RD}$, $\overline{WR}$, $\overline{PSEN}$, ALE)	2.4			V	$I_{OH} = -50\mu A$
V_{OH2}	Output High Voltage (All Other Outputs)	2.4			V	$I_{OH} = -30\mu A$
I_{LI}	Input Leakage Current (T1, $\overline{INT}$)			±10	μA	$V_{SS} \le V_{IN} \le V_{CC}$
I_{LI1}	Input Leakage Current (P10-P17, P20-P27, EA, $\overline{SS}$)			−700	μA	$V_{SS} + .45 \le V_{IN} \le V_{CC}$
I_{LO}	Output Leakage Current (BUS, TO) (High Impedance State)			±10	μA	$V_{SS} + .45 \le V_{IN} \le V_{CC}$
I_{DD}	V_{DD} Supply Current		10	25	mA	
$I_{DD} + I_{CC}$	Total Supply Current		80	155	mA	

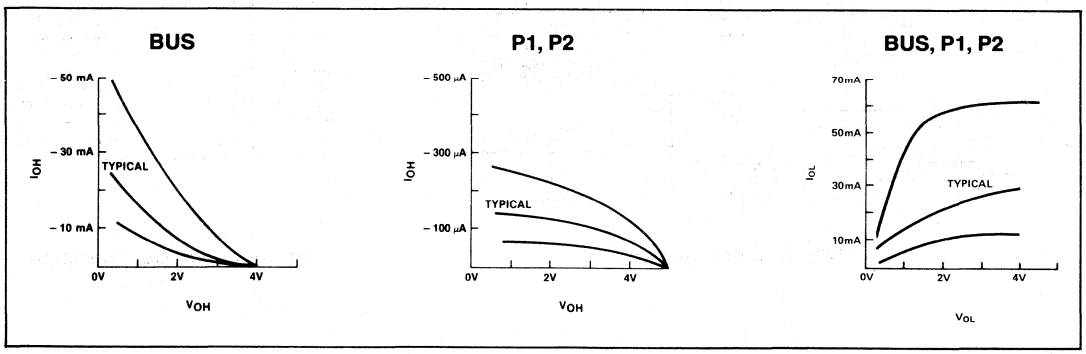

M8080A
8-BIT N-CHANNEL MICROPROCESSOR

The M8080A is functionally compatible with the Intel® 8080.

- **Military Temperature Range: −55°C to +125°C**
- **± 10% Power Supply Tolerance**
- **2 μs Instruction Cycle**
- **Powerful Problem-Solving Instruction Set**
- **6 General-Purpose Registers and an Accumulator**
- **16-Bit Program Counter for Directly Addressing Up to 64K Bytes of Memory**
- **16-Bit Stack Pointer and Stack Manipulation Instructions for Rapid Switching of the Program Environment**
- **Decimal, Binary, and Double Precision Arithmetic**
- **Ability to Provide Priority Vectored Interrupts**
- **512 Directly Addressed I/O Ports**

The Intel® M8080A is a complete 8-bit parallel central processing unit (CPU). It is fabricated on a single LSI chip using Intel's n-channel silicon gate MOS process—a high performance solution to control and processing applications.

The M8080A contains 6 8-bit general-purpose working registers and an accumulator. The 6 general-purpose registers may be addressed individually or in pairs providing single and double precision operators. Arithmetic and logical instructions set or reset 4 testable flags. A fifth flag provides decimal arithmetic operation.

The M8080A features an external stack. Any portion of memory may be used as a last in/first out stack to store/retrieve the contents of the accumulator, flags, program counter and all 6 general-purpose registers. The 16-bit stack pointer controls addressing of this external stack. This stack enables the M8080A to handle multiple-level priority interrupts by rapidly storing and restoring processor status. It also provides almost unlimited subroutine nesting.

This microprocessor simplifies systems design. Separate 16-line address and 8-line bidirectional data busses facilitate interface to memory and I/O. Signals to control the interface to memory and I/O are provided directly by the M8080A. Ultimate control of the address and data busses resides with the hold signal, which can suspend processor operation and force the address and data busses into a high impedance state. This permits OR-typing these busses with other controlling devices for (DMA) direct memory access or multiprocessor operation.

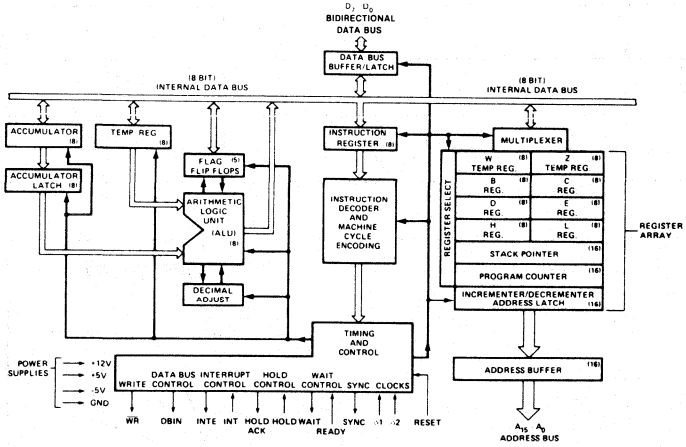

Figure 1. Block Diagram

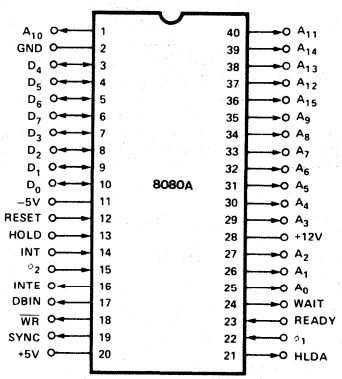

Figure 2. Pin Configuration

ABSOLUTE MAXIMUM RATINGS*

Temperature Under Bias	-55°C to +125°C
Storage Temperature	-65°C to +150°C
All Input or Output Voltages With Respect to V_{BB}	-0.3V to +20V
V_{CC}, V_{DD} and V_{SS} With Respect to V_{BB}	-0.3V to +20V
Power Dissipation	1.7W

**NOTICE: Stresses above those listed under "Absolute Maximum Ratings" may cause permanent damage to the device. This is a stress rating only and functional operation of the device at these or any other conditions above those indicated in the operational sections of this specification is not implied. Exposure to absolute maximum rating conditions for extended periods may affect device reliability.*

D.C. CHARACTERISTICS

(T_A = −55°C to +125°C, V_{DD} = +12V ±10%, V_{CC} = +5V ±10%, V_{BB} = −5V ±10%, V_{SS} = 0V; unless otherwise noted)

Symbol	Parameter	Min.	Typ.	Max.	Unit	Test Condition
V_{ILC}	Clock Input Low Voltage	V_{SS}−1		V_{SS}+0.8	V	
V_{IHC}	Clock Input High Voltage	8.5		V_{DD}+1	V	
V_{IL}	Input Low Voltage	V_{SS}−1		V_{SS}+0.8	V	
V_{IH}	Input High Voltage	3.0		V_{CC}+1	V	
V_{OL}	Output Low Voltage			0.45	V	I_{OL} = 1.9mA on all outputs, I_{OH} = 150μA.
V_{OH}	Output High Voltage	3.7			V	
$I_{DD\,(AV)}$	Avg. Power Supply Current (V_{DD})		50	80	mA	Operation T_{CY} = .48 μsec
$I_{CC\,(AV)}$	Avg. Power Supply Current (V_{CC})		60	100	mA	
$I_{BB\,(AV)}$	Avg. Power Supply Current (V_{BB})		.01	1	mA	
I_{IL}	Input Leakage			±10	μA	$V_{SS} \leq V_{IN} \leq V_{CC}$
I_{CL}	Clock Leakage			±10	μA	$V_{SS} \leq V_{CLOCK} \leq V_{DD}$
I_{DL} [2]	Data Bus Leakage in Input Mode			-100 -2.0	μA mA	$V_{SS} \leq V_{IN} \leq V_{SS}$ +0.8V V_{SS} +0.8V $\leq V_{IN} \leq V_{CC}$
I_{FL}	Address and Data Bus Leakage During HOLD			+10 -100	μA	$V_{ADDR/DATA} = V_{CC}$ $V_{ADDR/DATA} = V_{SS}$ + 0.45V

CAPACITANCE

(T_A = 25°C, V_{CC} = V_{DD} = V_{SS} = 0V, V_{BB} = −5V)

Symbol	Parameter	Typ.	Max.	Unit	Test Condition
C_ϕ	Clock Capacitance	17	25	pf	f_c = 1 MHz
C_{IN}	Input Capacitance	6	10	pf	Unmeasured Pins
C_{OUT}	Output Capacitance	10	20	pf	Returned to V_{SS}

A.C. CHARACTERISTICS

(T_A = −55°C to +125°C, V_{DD} = +12V ±10%, V_{CC} = +5V ±10%, V_{BB} = −5V ±10%, V_{SS} = 0V; unless otherwise noted)

Symbol	Parameter	Min.	Max.	Unit	Test Condition
t_{CY}[3]	Clock Period	0.48	2.0	μsec	
t_r, t_f	Clock Rise and Fall Time	0	50	nsec	
$t_{\phi 1}$	ϕ_1 Pulse Width	60		nsec	
$t_{\phi 2}$	ϕ_2 Pulse Width	220		nsec	
t_{D1}	Delay ϕ_1 to ϕ_2	0		nsec	
t_{D2}	Delay ϕ_2 to ϕ_1	80		nsec	
t_{D3}	Delay ϕ_1 to ϕ_2 Leading Edges	80		nsec	
t_{DA}[2]	Address Output Delay From ϕ_2		200	nsec	C_L = 50pf
t_{DD}[2]	Data Output Delay From ϕ_2		220	nsec	
t_{DC}[2]	Signal Output Delay From ϕ_1, or ϕ_2 (SYNC, $\overline{WR}$,WAIT,HLDA)		140	nsec	
t_{DF}[2]	DBIN Delay From ϕ_2	25	150	nsec	
t_{DI}[1]	Delay for Input Bus to Enter Input Mode		t_{DF}	nsec	
t_{DS1}	Data Setup Time During ϕ_1 and DBIN	30		nsec	
t_{DS2}	Data Setup Time to ϕ_2 During DBIN	130		nsec	
t_{DH}[1]	Data Hold Time From ϕ_2 During DBIN	[1]		nsec	
t_{IE}[2]	INTE Output Delay From ϕ_2		200	nsec	C_L = 50pf
t_{RS}	READY Setup Time During ϕ_2	120		nsec	
t_{HS}	HOLD Setup Time to ϕ_2	140		nsec	
t_{IS}	INT Setup Time During ϕ_2	120		nsec	
t_H	Hold Time From ϕ_2 (READY, INT, HOLD)	0		nsec	
t_{FD}	Delay to Float During Hold (Address and Data Bus)		130	nsec	
t_{AW}[2]	Address Stable Prior to $\overline{WR}$	[5]		nsec	C_L=50pf
t_{DW}[2]	Output Data Stable Prior to $\overline{WR}$	[6]		nsec	
t_{WD}[2]	Output Data Stable From $\overline{WR}$	[7]		nsec	
t_{WA}[2]	Address Stable From $\overline{WR}$	[7]		nsec	
t_{HF}[2]	HLDA to Float Delay	[8]		nsec	
t_{WF}[2]	$\overline{WR}$ to Float Delay	[9]		nsec	
t_{AH}[2]	Address Hold Time After DBIN During HLDA	-20		nsec	

NOTES:

1. The RESET signal must be active for a minimum of 3 clock cycles.
2. When DBIN is high and $V_{IN} > V_{IH}$ an internal active pull up will be switched onto the Data Bus.
3. ΔI supply / ΔT_A = -0.45%/°C.

A.C. TESTING LOAD CIRCUIT

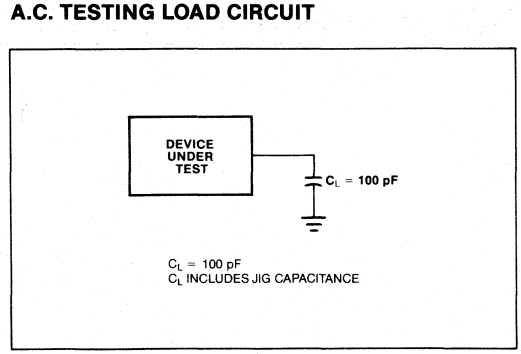

WAVEFORMS

NOTE:
Timing measurements are made at the following reference voltages: CLOCK "1" = 7.0V, "0" = 1.0V; INPUTS "1" = 3.0V, "0" = 0.8V; OUTPUTS "1" = 2.0V, "0" = 0.8V.

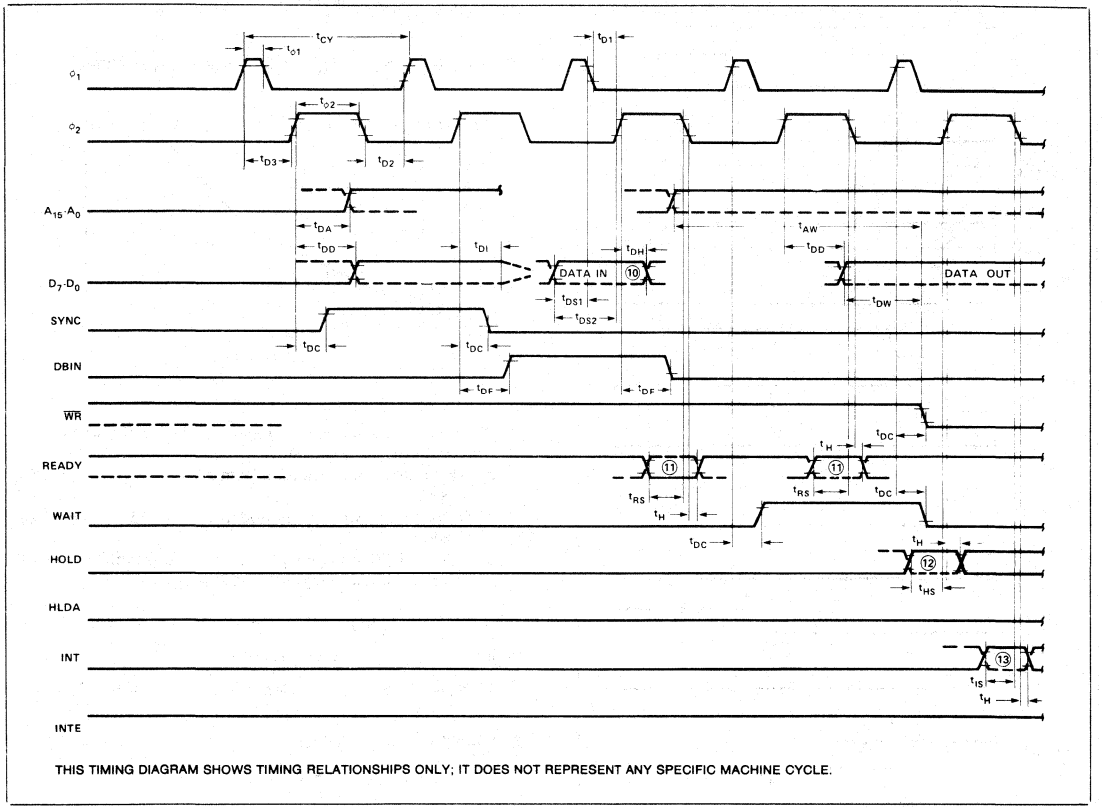

WAVEFORMS (Continued)

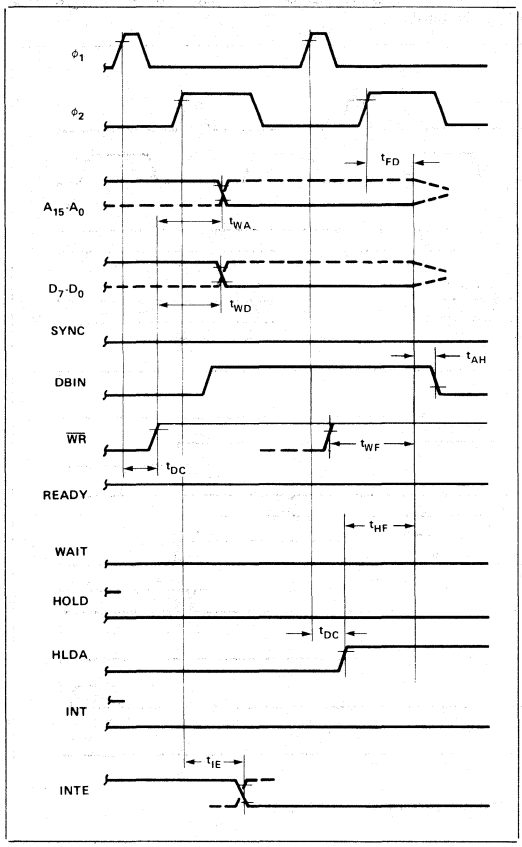

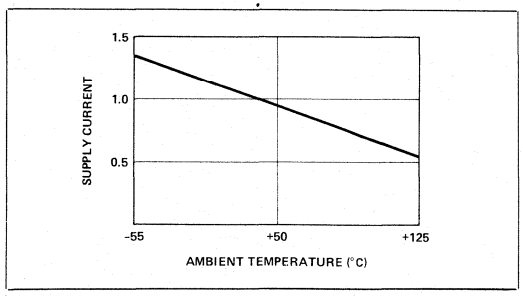

Typical Supply Current versus Temperature, Normalized

NOTES:

1. Data input should be enabled with DBIN status. No bus conflict can then occur and data hold time is assured. t_{DH} = 50 ns or t_{DF}, whichever is less.

2. $t_{CY} = t_{D3} + t_{r\phi2} + t_{\phi2} + t_{f\phi2} + t_{D2} + t_{r\phi1} \geq 480ns$.

TYPICAL Δ OUTPUT DELAY VS. Δ CAPACITANCE

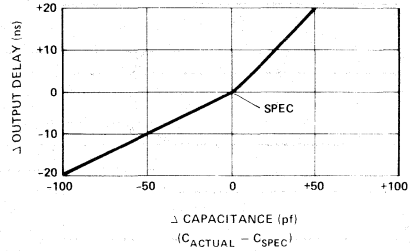

3. The following are relevant when interfacing the M8080A to devices having V_{IH} = 3.3V:
   a) Maximum output rise time from .8V to 3.3V = 100ns @ C_L = SPEC.
   b) Output delay when measured to 3.0V = SPEC +60ns @ C_L = SPEC.
   c) If C_L = SPEC, add .6ns/pF if $C_L > C_{SPEC}$, subtract .3ns/pF (from modified delay) if $C_L < C_{SPEC}$.

4. $t_{AW} = 2\,t_{CY} - t_{D3} - t_{r\phi2} - 140nsec$.

5. $t_{DW} = t_{CY} - t_{D3} - t_{r\phi2} - 170nsec$.

6. If not HLDA, $t_{WD} = t_{WA} = t_{D3} + t_{r\phi2} + 10ns$. If HLDA, $t_{WD} = t_{WA} = t_{WF}$.

7. $t_{HF} = t_{D3} + t_{r\phi2} - 50ns$.

8. $t_{WF} = t_{D3} + t_{r\phi2} - 10ns$.

9. Data in must be stable for this period during DBIN · T_3. Both t_{DS1} and t_{DS2} must be satisfied.

10. Ready signal must be stable for this period during T_2 or T_W. (Must be externally synchronized.)

11. Hold signal must be stable for this period during T_2 or T_W when entering hold mode, and during T_3, T_4, T_5 and T_{WH} when in hold mode. (External synchronization is not required.)

12. Interrupt signal must be stable during this period of the last clock cycle of any instruction in order to be recogized on the following instruction. (External synchronization is not required.)

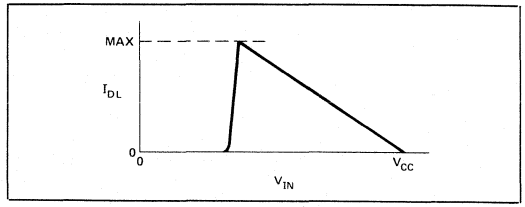

Data Bus Characteristics During DBIN

M8085AH
8-BIT HMOS MICROPROCESSOR

MILITARY

- **Single +5V Power Supply with 10% Voltage Margins**
- **Full Military Temperature Range: -55° C to +125° C**
- **1.3 μs Instruction Cycle (8085AH)**
- **100% Compatible with M8085A**
- **100% Software Compatible with M8080A**
- **On-Chip Clock Generator (with External Crystal, LC or RC Network)**
- **On-Chip System Controller; Advanced Cycle Status Information Available for Large System Control**
- **Four Vectored Interrupt Inputs (One is Non-Maskable) Plus an M8080A-Compatible Interrupt**
- **Serial In/Serial Out Port**
- **Decimal, Binary and Double Precision Arithmetic**
- **Direct Addressing Capability to 64K Bytes of Memory**

The Intel M8085AH is a complete 8 bit parallel Central Processing Unit (CPU) implemented in N-channel, depletion load, silicon gate technology (HMOS). Its instruction set is 100% software compatible with the M8080A microprocessor, and it is designed to improve the present M8080A's performance by higher system speed. Its high level of system integration allows a minimum system of three IC's [M8085AH (CPU), M8185H (RAM/IO) and M8755A (PROM/IO)] while maintaining total system expandability.

The M8085AH incorporates all of the features that the M8224 (clock generator) and M8228 (system controller) provided for the M8080A, thereby offering a high level of system integration.

The M8085AH uses a multiplexed data bus. The address is split between the 8 bit address bus and the 8 bit data bus. The on-chip address latches of M8155H/M8755A memory products allow a direct interface with the M8085AH.

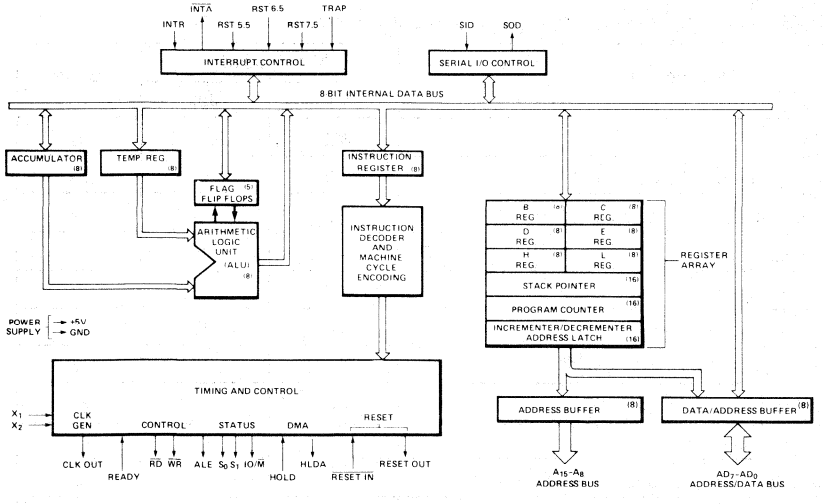

Figure 1. M8085AH CPU Functional Block Diagram

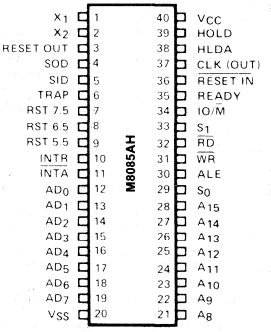

Figure 2. M8085AH Pin Configuration

The following are trademarks of Intel Corporation and its affiliates and may be used only to identify Intel products: i, Intel, INTELLEC, MCS, Im, iCS, ICE, UPI, BXP, iSBC, iSBX, Insite, iRMX, System 2000, CREDIT, iRMX/80, MULTIBUS, PROMPT, Promware, Megachassis, Library Manager, MAIN MULTIMODULE, and the combination of MCS, ICE, iSBC, iRMX or iCS and a numerical suffix. © INTEL CORPORATION, 1981.

OCTOBER 1981
AFN-02033A

ABSOLUTE MAXIMUM RATINGS*

Ambient Temperature Under Bias ..... -55°C to +125°C
Storage Temperature ..... -65°C to +150°C
Voltage on Any Pin with
Respect to Ground ..... -0.5V to +7V
Power Dissipation ..... 1.5 Watt

**NOTICE: Stresses above those listed under "Absolute Maximum Ratings" may cause permanent damage to the device. This is a stress rating only and functional operation of the device at these or any other conditions above those indicated in the operational sections of this specification is not implied. Exposure to absolute maximum rating conditions for extended periods may affect device reliability.*

D.C. CHARACTERISTICS (T_A = -55°C to +125°C, V_{CC} = 5V ±10%, V_{SS} = 0V; unless otherwise specified)

Symbol	Parameter	Min	Max	Units	Test Conditions
V_{IL}	Input Low Voltage	-0.5	+0.8	V	
V_{IH}	Input High Voltage	2.2	V_{CC} +0.5	V	
V_{OL}	Output Low Voltage		0.45	V	I_{OL} = 2mA
V_{OH}	Output High Voltage	2.4		V	I_{OH} = -400μA
I_{CC}	Power Supply Current		200	mA	
I_{IL}	Input Leakage		±10	μA	$0 \leq V_{IN} \leq V_{CC}$
I_{LO}	Output Leakage		±10	μA	$0.45 \leq V_{OUT} \leq V_{CC}$
V_{ILR}	Input Low Level, RESET	-0.5	+0.8	V	
V_{IHR}	Input High Level, RESET	2.4	V_{CC} +0.5	V	
V_{HY}	Hysteresis, RESET	0.25		V	

A.C. CHARACTERISTICS (T_A = -55°C to +125°C, V_{CC} = 5V ±10%, V_{SS} = 0V)

Symbol	Parameter	M8085AH[2]		Units
		Min	Max	
t_{CYC}	CLK Cycle Period	320	2000	ns
t_1	CLK Low Time (Standard CLK Loading)	80		ns
t_2	CLK High Time (Standard CLK Loading)	120		ns
t_r, t_f	CLK Rise and Fall Time		30	ns
t_{XKR}	X_1 Rising to CLK Rising	20	120	ns
t_{XKF}	X_1 Rising to CLK Falling	20	150	ns
t_{AC}	A_{8-15} Valid to Leading Edge of Control[1]	270		ns
t_{ACL}	A_{0-7} Valid to Leading Edge of Control	240		ns
t_{AD}	A_{0-15} Valid to Valid Data In		575	ns
t_{AFR}	Address Float After Leading Edge of $\overline{READ}$ ($\overline{INTA}$)		0	ns
t_{AL}	A_{8-15} Valid Before Trailing Edge of ALE[1]	90		ns
t_{ALL}	A_{0-7} Valid Before Trailing Edge of ALE	70		ns

A.C. CHARACTERISTICS (Continued)

Symbol	Parameter	M8085AH[2]		Units
		Min	Max	
t_{ARY}	READY Valid from Address Valid		220	ns
t_{CA}	Address (A_{8-15}) Valid After Control	120		ns
t_{CC}	Width of Control Low ($\overline{RD}$, $\overline{WR}$, $\overline{INTA}$) Edge of ALE	400		ns
t_{CL}	Trailing Edge of Control to Leading Edge of ALE	50		ns
t_{DW}	Data Valid to Trailing Edge of $\overline{WRITE}$	420		ns
t_{HABE}	HLDA to Bus Enable		210	ns
t_{HABF}	Bus Float After HLDA		210	ns
t_{HACK}	HLDA Valid to Trailing Edge of CLK	110		ns
t_{HDH}	HOLD Hold Time	0		ns
t_{HDS}	HOLD Setup Time to Trailing Edge of CLK	170		ns
t_{INH}	INTR Hold Time	0		ns
t_{INS}	INTR, RST, and TRAP Setup Time to Falling Edge of CLK	160		ns
t_{LA}	Address Hold Time After ALE	100		ns
t_{LC}	Trailing Edge of ALE to Leading Edge of Control	130		ns
t_{LCK}	ALE Low During CLK High	100		ns
t_{LDR}	ALE to Valid Data During Read		460	ns
t_{LDW}	ALE to Valid Data During Write		200	ns
t_{LL}	ALE Width	140		ns
t_{LRY}	ALE to READY Stable		110	ns
t_{RAE}	Trailing Edge of $\overline{READ}$ to Re-Enabling of Address	150		ns
t_{RD}	$\overline{READ}$ (or $\overline{INTA}$) to Valid Data		300	ns
t_{RV}	Control Trailing Edge to Leading Edge of Next Control	400		ns
t_{RDH}	Data Hold Time After $\overline{READ}$ $\overline{INTA}$	0		ns
t_{RYH}	READY Hold Time	0		ns
t_{RYS}	READY Setup Time to Leading Edge of CLK	110		ns
t_{WD}	Data Valid After Trailing Edge of $\overline{WRITE}$	100		ns
t_{WDL}	LEADING Edge of $\overline{WRITE}$ to Data Valid		40	ns

NOTES:

1. A_8-A_{15} address Specs apply IO/$\overline{M}$, S_0, and S_1 except A_8-A_{15} are undefined during T_4-T_6 of OF cycle whereas IO/$\overline{M}$, S_0, and S_1 are stable.
2. *Test Conditions:* t_{CYC} = 320 ns (M8085AH); C_L = 150 pF.
3. For all output timing where $C_L \neq 150$ pF use the following correction factors:
   $25\ pF \leq C_L < 150\ pF$: -0.10 ns/pF
   $150\ pF < C_L \leq 300\ pF$: +0.30 ns/pF
4. Output timings are measured with purely capacitive load.
5. To calculate timing specifications at other values of t_{CYC} use Table 5.

WAVEFORMS

CLOCK

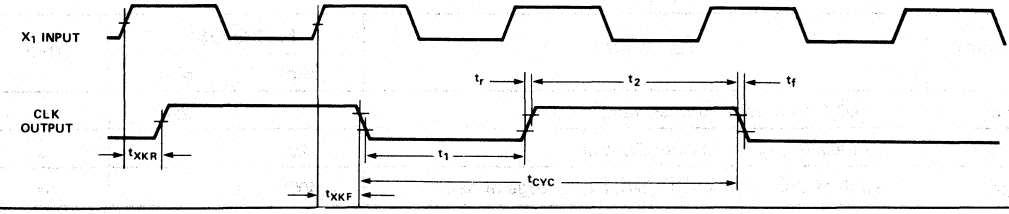

READ

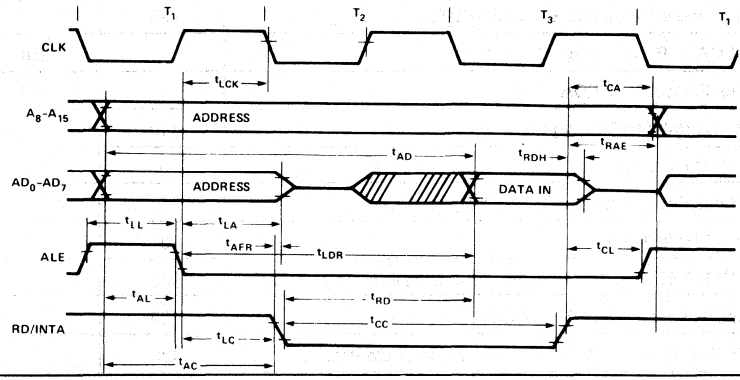

WRITE

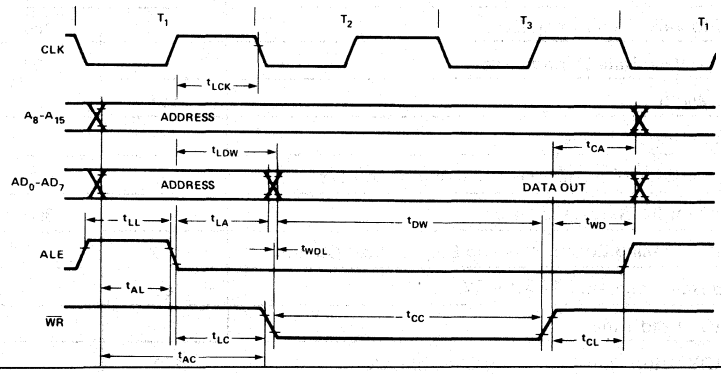

HOLD

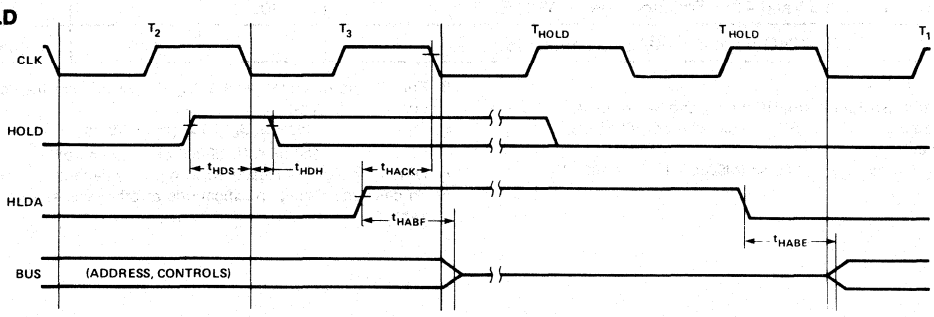

WAVEFORMS (Continued)

READ OPERATION WITH WAIT CYCLE (TYPICAL) — SAME READY TIMING APPLIES TO WRITE

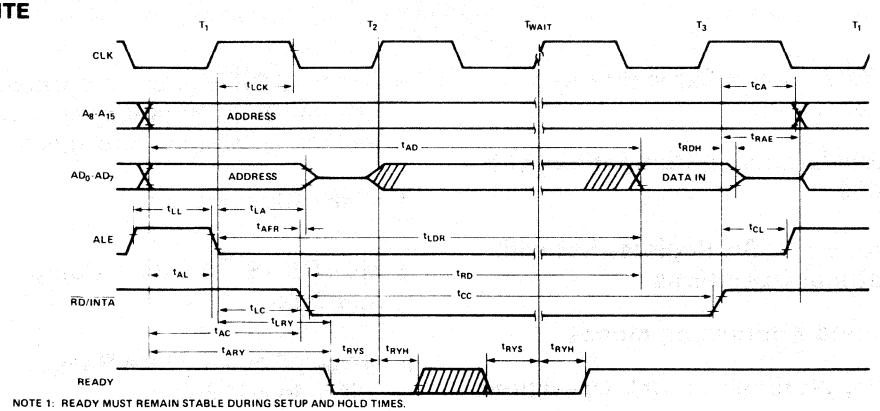

NOTE 1: READY MUST REMAIN STABLE DURING SETUP AND HOLD TIMES.

INTERRUPT AND HOLD

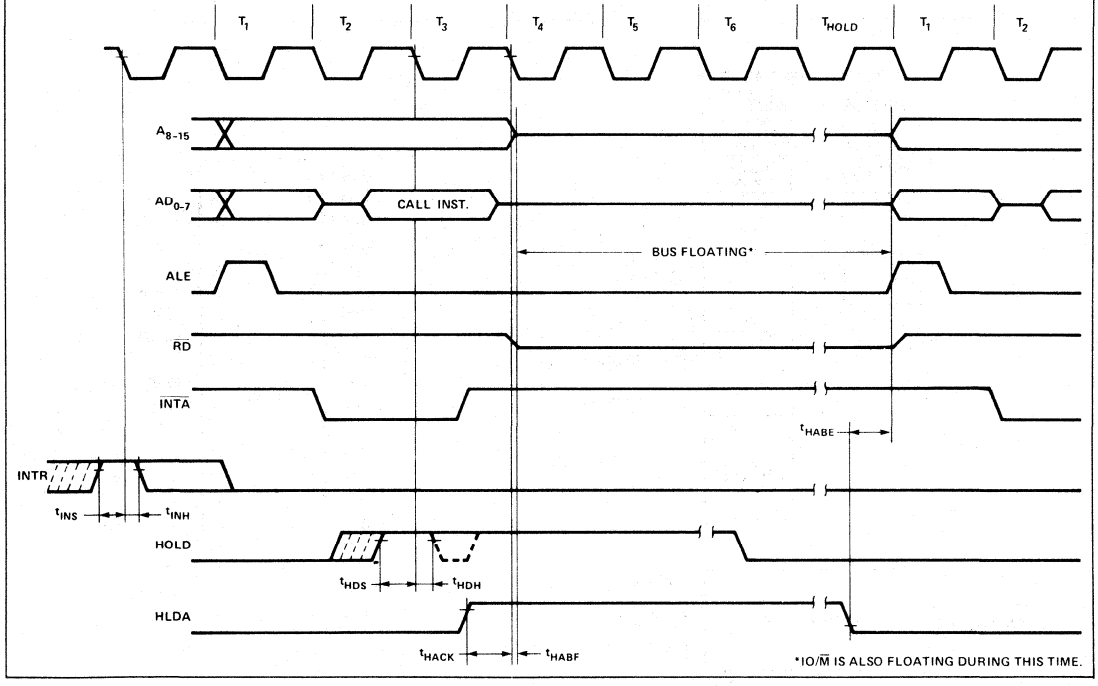

*IO/M IS ALSO FLOATING DURING THIS TIME.

MILITARY iAPX 86/10
16-BIT HMOS MICROPROCESSOR

(M8086)
MILITARY

- **Direct Addressing Capability to 1 MByte of Memory**
- **Assembly Language Compatible with 8080/8085**
- **14 Word, By 16-Bit Register Set with Symmetrical Operations**
- **24 Operand Addressing Modes**
- **Bit, Byte, Word, and Block Operations**
- **8-and 16-Bit Signed and Unsigned Arithmetic in Binary or Decimal Including Multiply and Divide**
- **5 MHz Clock Rate**
- **MULTIBUS™ System Compatible Interface**
- **Military Temperature Range: −55°C to +125°C**

The Intel® Military iAPX 86/10 is a new generation, high performance 16-bit microprocessor implemented in N-channel, depletion load, silicon gate technology (HMOS), and packaged in a 40-pin CerDIP package. The processor has attributes of both 8- and 16-bit microprocessors. It addresses memory as a sequence of 8-bit bytes, but has a 16-bit wide physical path to memory for high performance.

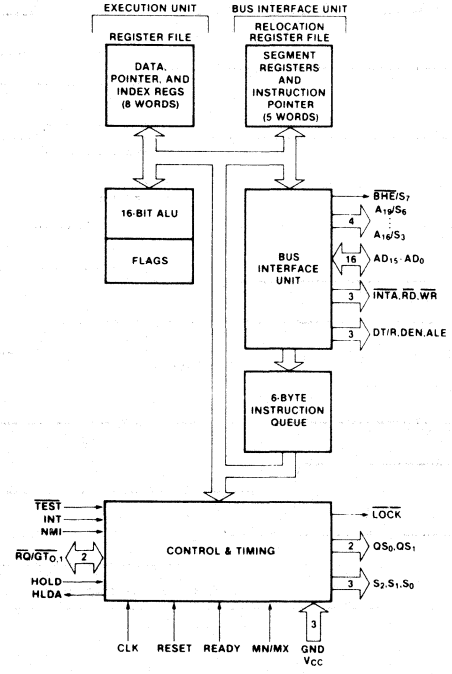

Figure 1. Functional Block Diagram

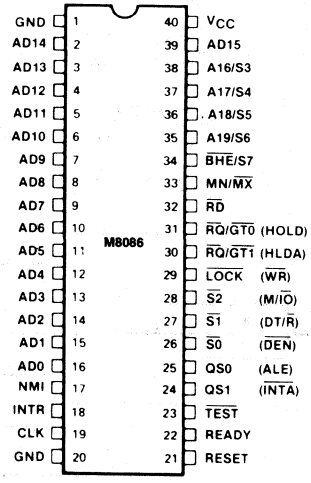

Figure 2. Pin Configuration

ABSOLUTE MAXIMUM RATINGS*

Ambient Temperature Under Bias . . . . −55°C to +125°C
Storage Temperature . . . . . −65°C to +150°C
Voltage on Any Pin with
Respect to Ground . . . . . −1.0 to +7V
Power Dissipation . . . . . 2.5 Watt

**NOTICE: Stresses above those listed under "Absolute Maximum Ratings" may cause permanent damage to the device. This is a stress rating only and functional operation of the device at these or any other conditions above those indicated in the operational sections of this specification is not implied. Exposure to absolute maximum rating conditions for extended periods may affect device reliability.*

D.C. CHARACTERISTICS (T_A = −55°C to +125°C, V_{CC} = 5V ±10%)

Symbol	Parameter	Min.	Max.	Unit	Test Conditions
V_{IL}	Input Low Voltage	−0.5	+0.8	V	
V_{IH}	Input High Voltage	2.0	V_{CC}+0.5	V	
V_{OL}	Output Low Voltage		0.45	V	I_{OL}=2.0 mA
V_{OH}	Output High Voltage	2.4		V	I_{OH}=−400 μA
I_{CC}	Power Supply Current		340	mA	T_A=25°C
I_{LI}	Input Leakage Current		±10	μA	$0V < V_{IN} < V_{CC}$
I_{LO}	Output Leakage Current		±10	μA	$0.45V \leq V_{OUT} \leq V_{CC}$
V_{CL}	Clock Input Low Voltage	−0.5	+0.6	V	
V_{CH}	Clock Input High Voltage	3.9	V_{CC}+1.0	V	
C_{IN}	Capacitance of Input Buffer (All input except AD_0-AD_{15}, $\overline{RQ}/\overline{GT}$)		15	pF	fc=1 MHz
C_{IO}	Capacitance of I/O Buffer (AD_0-AD_{15}, $\overline{RQ}/\overline{GT}$)		15	pF	fc=1 MHz

A.C. CHARACTERISTICS (T_A = −55°C to +125°C, V_{CC} = 5V ±10%)

MINIMUM COMPLEXITY SYSTEM TIMING REQUIREMENTS

Symbol	Parameter	iAPX 86		Units	Test Conditions
		Min	Max		
TCLCL	CLK Cycle Period — 8086	200	500	ns	
TCLCH	CLK Low Time	(⅔ TCLCL)-15		ns	
TCHCL	CLK High Time	(⅓ TCLCL) + 2		ns	
TCH1CH2	CLK Rise Time		10	ns	From 1.0V to 35.V
TCL2CL1	CLK Fall Time		10	ns	From 3.5V to 1.0V
TDVCL	Data in Setup Time	30		ns	
TCLDX	Data In Hold Time	10		ns	
TR1VCL	RDY Setup Time into 8284 (See Notes 1, 2)	35		ns	
TCLR1X	RDY Hold Time into 8284 (See Notes, 1, 2)	0		ns	
TRYHCH	READY Setup Time Into 8086	(⅔ TCLCL)-15		ns	
TCHRYX	READY Hold Time Into 8086	30		ns	
TRYLCL	READY Inactive to CLK (See Note 3)	-8		ns	
THVCH	HOLD Setup Time	35		ns	
TINVCH	INTR, NMI, $\overline{TEST}$ Setup Time (See Note 2)	30		ns	
TILIH	Input Rise Time (Except CLK)		20	ns	From 0.8V to 2.0V
TIHIL	Input Fall Time (Except CLK)		12	ns	From 2.0V to 0.8V

TIMING RESPONSES

Symbol	Parameter	iAPX 86		Units	Test Conditions
		Min	Max		
TCLAV	Address Valid Delay	10	110	ns	
TCLAX	Address Hold Time	10		ns	
TCLAZ	Address Float Delay	TCLAX	80	ns	
TLHLL	ALE Width	TCLCH-20		ns	
TCLLH	ALE Active Delay		80	ns	
TCHLL	ALE Inactive Delay		85	ns	
TLLAX	Address Hold Time to ALE Inactive	TCHCL-10		ns	
TCLDV	Data Valid Delay	10	110	ns	C_L = 20-100 pF for all 8086 Outputs (In addition to 8086 self-load)
TCHDX	Data Hold Time	10		ns	
TWHDX	Data Hold Time After WR	TCLCH-30		ns	
TCVCTV	Control Active Delay 1	10	110	ns	
TCHCTV	Control Active Delay 2	10	110	ns	
TCVCTX	Control Inactive Delay	10	110	ns	
TAZRL	Address Float to READ Active	0		ns	
TCLRL	$\overline{RD}$ Active Delay	10	165	ns	
TCLRH	$\overline{RD}$ Inactive Delay	10	150	ns	
TRHAV	$\overline{RD}$ Inactive to Next Address Active	TCLCL-45		ns	
TCLHAV	HLDA Valid Delay	10	160	ns	
TRLRH	$\overline{RD}$ Width	2TCLCL-75		ns	
TWLWH	$\overline{WR}$ Width	2TCLCL-60		ns	
TAVAL	Address Valid to ALE Low	TCLCH-60		ns	
TOLOH	Output Rise Time		20	ns	From 0.8V to 2.0V
TOHOL	Output Fall Time		12	ns	From 2.0V to 0.8V

NOTES:

1. Signal at 8284 shown for reference only.
2. Setup requirement for asynchronous signal only to guarantee recognition at next CLK.
3. Applies only to T2 state (8 ns into T3).

A.C. TESTING INPUT, OUTPUT WAVEFORM

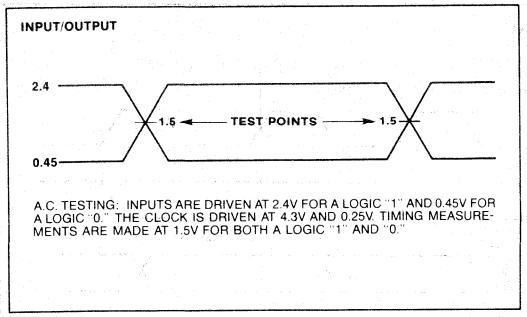

A.C. TESTING: INPUTS ARE DRIVEN AT 2.4V FOR A LOGIC "1" AND 0.45V FOR A LOGIC "0." THE CLOCK IS DRIVEN AT 4.3V AND 0.25V. TIMING MEASUREMENTS ARE MADE AT 1.5V FOR BOTH A LOGIC "1" AND "0."

A.C. TESTING LOAD CIRCUIT

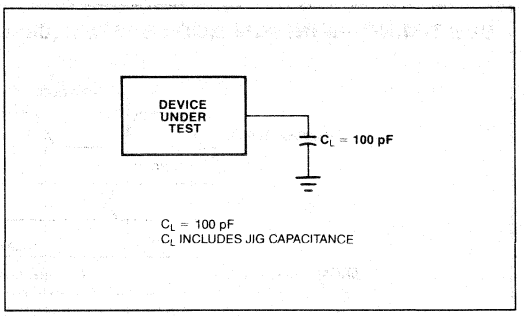

C_L = 100 pF
C_L INCLUDES JIG CAPACITANCE

WAVEFORMS

BUS TIMING—MINIMUM MODE SYSTEM

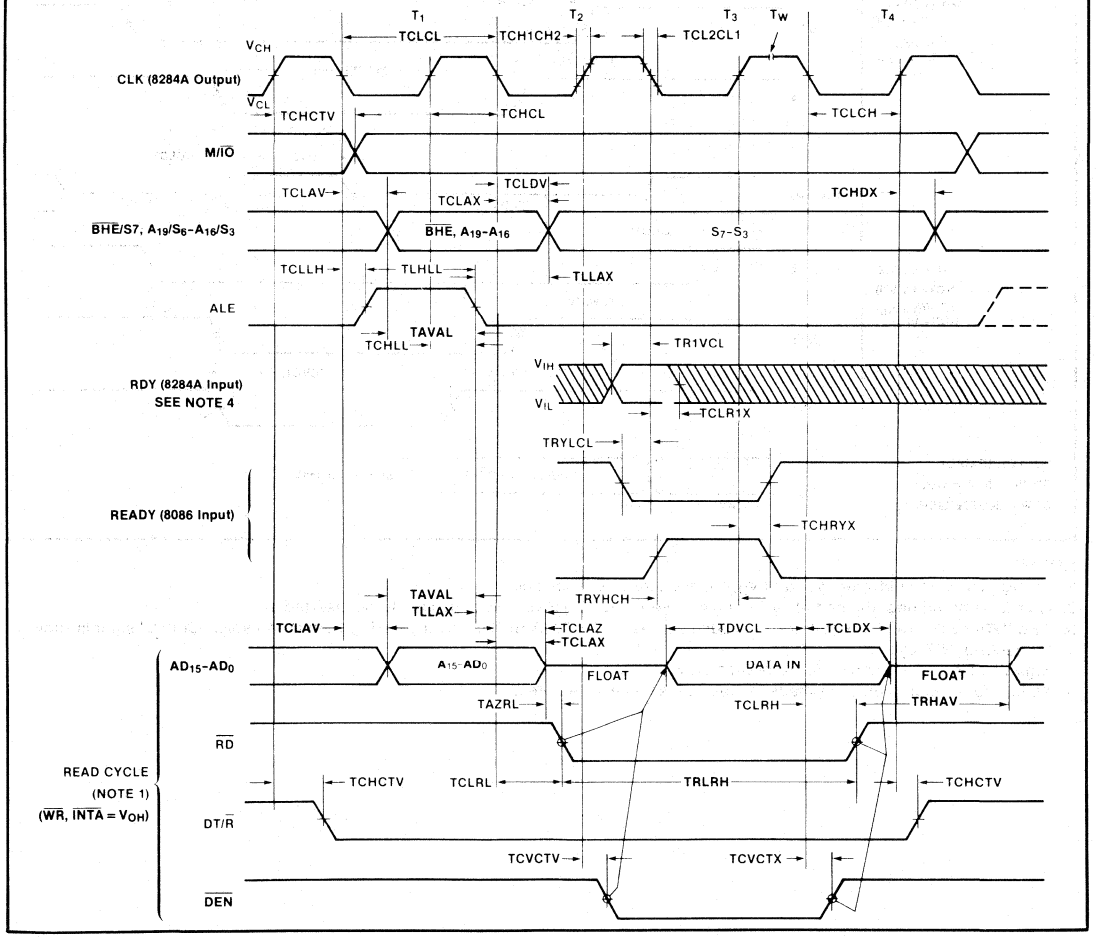

AFN-01237B

WAVEFORMS (Continued)

BUS TIMING—MINIMUM MODE SYSTEM (Continued)

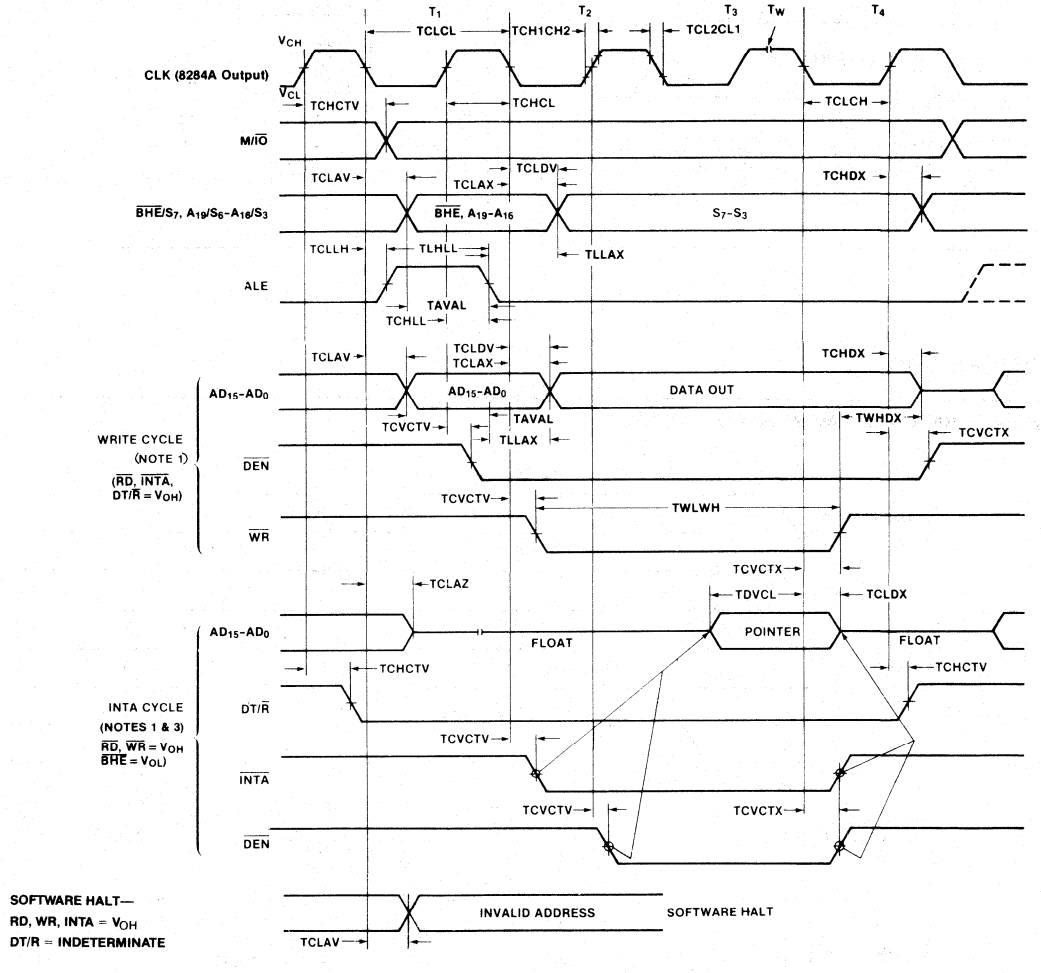

NOTES:

1. All signals switch between V_{OH} and V_{OL} unless otherwise specified.
2. RDY is sampled near the end of T_2, T_3, T_W to determine if T_W machines states are to be inserted.
3. Two INTA cycles run back-to-back. The 8086 LOCAL ADDR/DATA BUS is floating during both INTA cycles. Control signals shown for second INTA cycle.
4. Signals at 8284A are shown for reference only.
5. All timing measurements are made at 1.5V unless otherwise noted.

A.C. CHARACTERISTICS

MAX MODE SYSTEM (USING 8288 BUS CONTROLLER) TIMING REQUIREMENTS

Symbol	Parameter	8086		Units	Test Conditions
		Min	Max		
TCLCL	CLK Cycle Period — 8086	200	500	ns	
TCLCH	CLK Low Time	(⅔ TCLCL) − 15		ns	
TCHCL	CLK High Time	(⅓ TCLCL) + 2		ns	
TCH1CH2	CLK Rise Time		10	ns	From 1.0V to 3.5V
TCL2CL1	CLK Fall Time		10	ns	From 3.5V to 1.0V
TDVCL	Data in Setup Time	30		ns	
TCLDX	Data in Hold Time	10		ns	
TR1VCL	RDY Setup Time into 8284 (See Notes 1, 2)	35		ns	
TCLR1X	RDY Hold Time into 8284 (See Notes 1, 2)	0		ns	
TRYHCH	Ready Setup Time into 8086	(⅔ TCLCL) − 15		ns	
TCHRYX	Ready Hold Time into 8086	30		ns	
TRYLCL	READY Inactive to CLK (See Note 4)	−8		ns	
TINVCH	Setup Time for Recognition (INTR, NMI, TEST) (See Note 2)	30		ns	
TGVCH	RQ/GT Setup Time	30		ns	
TCHGX	RQ Hold Time into 8086	40		ns	
TILIH	Input Rise Time (Except CLK)		20	ns	From 0.8V to 2.0V
TIHIL	Input Fall Time (Except CLK)		12	ns	From 2.0V to 0.8V

TIMING RESPONSES

Symbol	Parameter	8086		Units	Test Conditions
		Min	Max		
TCLML	Command Active Delay (See Note 1)	10	35	ns	C_L = 20–100 pF for all 8086 Outputs (In addition to 8086 self-load)
TCLMH	Command Inactive Delay (See Note 1)	10	35	ns	
TRYHSH	READY Active to Status Passive (See Note 3)		110	ns	
TCHSV	Status Active Delay	10	110	ns	
TCLSH	Status Inactive Delay	10	130	ns	
TCLAV	Address Valid Delay	10	110	ns	
TCLAX	Address Hold Time	10		ns	
TCLAZ	Address Float Delay	TCLAX	80	ns	
TSVLH	Status Valid to ALE High (See Note 1)		15	ns	
TSVMCH	Status Valid to MCE High (See Note 1)		15	ns	
TCLLH	CLK Low to ALE Valid (See Note 1)		15	ns	
TCLMCH	CLK Low to MCE High (See Note 1)		15	ns	
TCHLL	ALE Inactive Delay (See Note 1)		15	ns	
TCLMCL	MCE Inactive Delay (See Note 1)		15	ns	
TCLDV	Data Valid Delay	10	110	ns	
TCHDX	Data Hold Time	10		ns	
TCVNV	Control Active Delay (See Note 1)	5	45	ns	
TCVNX	Control Inactive Delay (See Note 1)	10	45	ns	
TAZRL	Address Float to Read Active	0		ns	
TCLRL	RD Active Delay	10	165	ns	

A.C. CHARACTERISTICS (Continued)

Symbol	Parameter	8086/8086-4		Units	Test Conditions
		Min.	Max.		
TCLRH	RD Inactive Delay	10	150	ns	
TRHAV	RD Inactive to Next Address Active	TCLCL-45		ns	
TCHDTL	Direction Control Active Delay (See Note 1)		50	ns	
TCHDTH	Direction Control Inactive Delay (See Note 1)		30	ns	
TCLGL	GT Active Delay	0	85	ns	
TCLGH	GT Inactive Delay	0	85	ns	
TRLRH	RD Width	2TCLCL-75		ns	
TOLOH	Output Rise Time		20	ns	From 0.8V to 2.0V
TOHOL	Output Fall Time		12	ns	From 2.0V to 0.8V

NOTES:
1. Signal at 8284 or 8288 shown for reference only.
2. Setup requirement for asynchronous signal only to guarantee recognition at next CLK.
3. Applies only to T3 and wait states.
4. Applies only to T2 state (8 ns into T3).

WAVEFORMS

BUS TIMING—MAXIMUM MODE SYSTEM (USING 8288)

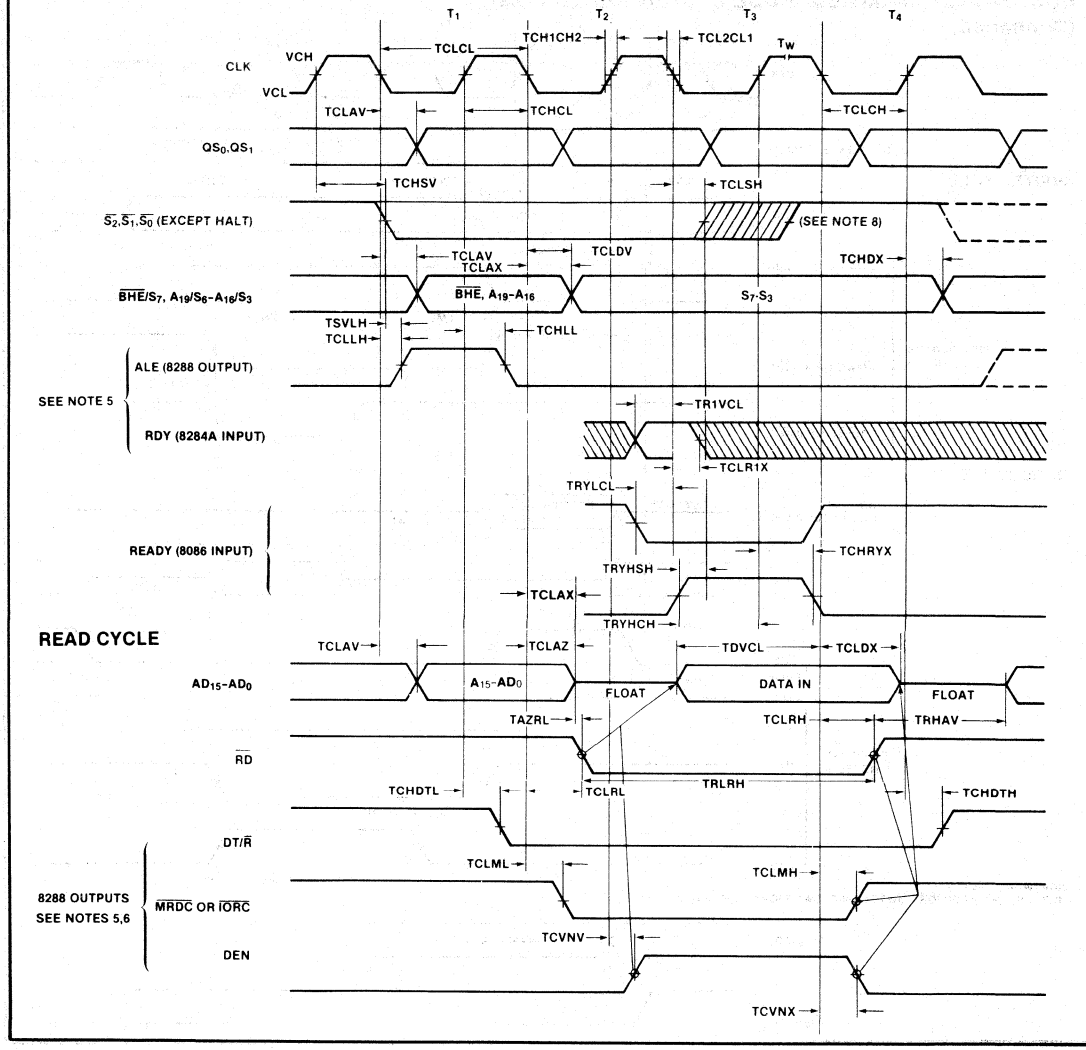

WAVEFORMS (Continued)

BUS TIMING—MAXIMUM MODE SYSTEM (USING 8288) (Continued)

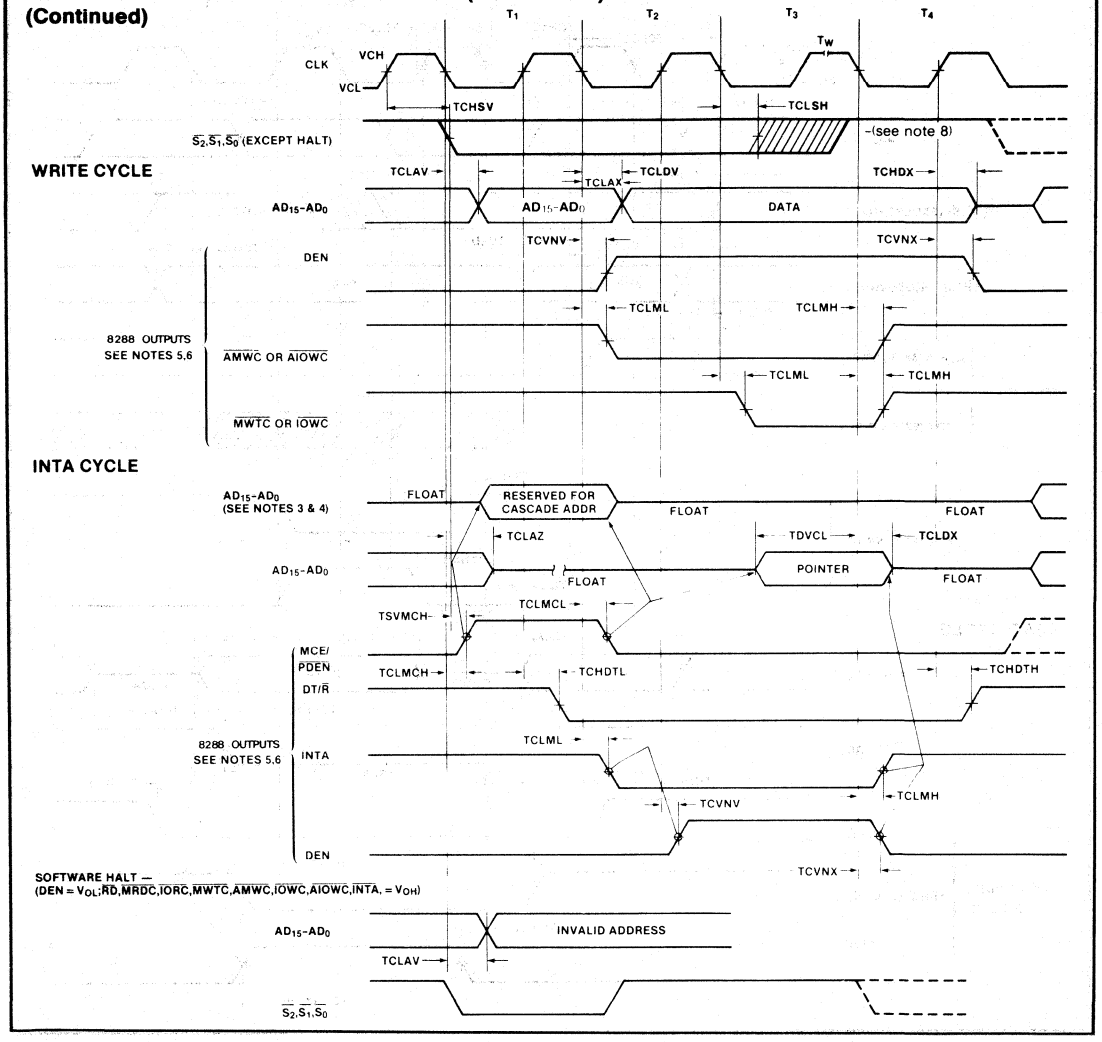

NOTES:

1. All signals switch between V_{OH} and V_{OL} unless otherwise specified.
2. RDY is sampled near the end of T_2, T_3, T_W to determine if T_W machines states are to be inserted.
3. Cascade address is valid between first and second INTA cycle.
4. Two INTA cycles run back-to-back. The 8086 LOCAL ADDR/DATA BUS is floating during both INTA cycles. Control for pointer address is shown for second INTA cycle.
5. Signals at 8284A or 8288 are shown for reference only.
6. The issuance of the 8288 command and control signals ($\overline{MRDC}$, $\overline{MWTC}$, $\overline{AMWC}$, $\overline{IORC}$, $\overline{IOWC}$, $\overline{AIOWC}$, $\overline{INTA}$ and DEN) lags the active high 8288 CEN.
7. All timing measurements are made at 1.5V unless otherwise noted.
8. Status inactive in state just prior to T_4.

M8155H
2048-BIT STATIC HMOS RAM WITH I/O PORTS AND TIMER

MILITARY

- **Full Military Temperature Range: -55° C to +125° C**
- **30% Lower Power Consumption than the M8155**
- **100% Compatible with M8155**
- **256 Word x 8 Bits**
- **Completely Static Operation**
- **Internal Address Latch**
- **2 Programmable 8-Bit I/O Ports**
- **1 Programmable 6-Bit I/O Port**
- **Programmable 14-Bit Binary Counter/ Timer**
- **Compatible with M8085AH**
- **Multiplexed Address and Data Bus**
- **Single +5V Power Supply with 10% Voltage Margins**

The Intel M8155H is a RAM and I/O chip implemented in N-Channel, depletion load, silicon gate technology (HMOS) to be used in the M8085AH microprocessor system. The RAM portion is designed with 2048 static cells organized as 256 x 8. They have a maximum access time of 400 ns to permit use with no wait states in an M8085AH CPU.

The I/O portion consists of three general-purpose I/O ports. One of the three ports can be programmed to be status pins, thus allowing the other two ports to operate in handshake mode.

A 14-bit programmable counter/timer is also included on-chip to provide either a square wave or terminal count pulse for the CPU system, depending on timer mode.

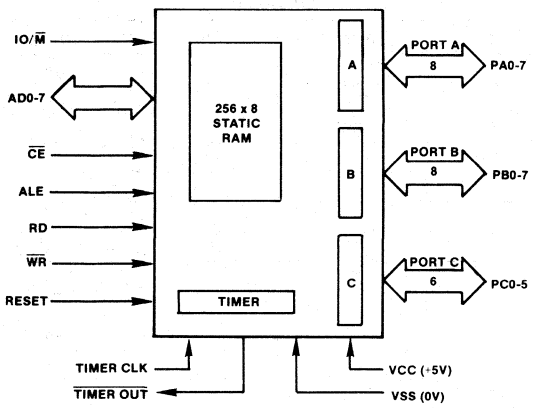

Figure 1. M8155H Block Diagram

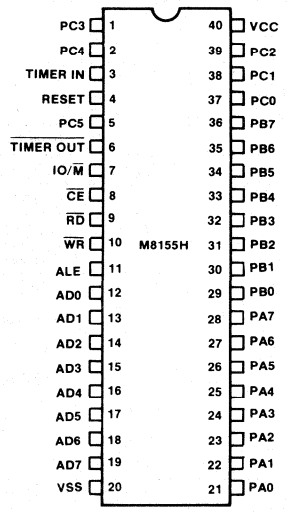

Figure 2. M8155H Pin Configuration

ABSOLUTE MAXIMUM RATINGS*

Temperature Under Bias ..... -55°C to +125°C
Storage Temperature ..... -65°C to +150°C
Voltage on Any Pin
With Respect to Ground ..... -0.5V to +7V
Power Dissipation 1.5W

**NOTICE: Stresses above those listed under "Absolute Maximum Ratings" may cause permanent damage to the device. This is a stress rating only and functional operation of the device at these or any other conditions above those indicated in the operational sections of this specification is not implied. Exposure to absolute maximum rating conditions for extended periods may affect device reliability.*

D.C. CHARACTERISTICS (T_A = -55°C to +125°C; V_{CC} = 5V ±10%)

Symbol	Parameter	Min	Max	Units	Test Conditions
V_{IL}	Input Low Voltage	-0.5	0.8	V	
V_{IH}	Input High Voltage	2.0	V_{CC}+0.5	V	
V_{OL}	Output Low Voltage		0.45	V	I_{OL} = 2mA
V_{OH}	Output High Voltage	2.4		V	I_{OH} = -400μA
I_{IL}	Input Leakage		±10	μA	$0V \leqslant V_{IN} \leqslant V_{CC}$
I_{LO}	Output Leakage Current		±10	μA	$0.45V \leqslant V_{OUT} \leqslant V_{CC}$
I_{CC}	V_{CC} Supply Current		125	mA	
$I_{IL(\overline{CE})}$	Chip Enable Leakage M8155H		+100	μA	$0V \leqslant V_{IN} \leqslant V_{CC}$

A.C. CHARACTERISTICS (T_A = -55°C to +125°C; V_{CC} = 5V ±10%)

		M8155H		
Symbol	Parameter	Min	Max	Units
t_{AL}	Address to Latch Set Up Time	50		ns
t_{LA}	Address Hold Time after Latch	80		ns
t_{LC}	Latch to READ/WRITE Control	100		ns
t_{RD}	Valid Data Out Delay from READ Control		170	ns
t_{AD}	Address Stable to Data Out Valid		400	ns
t_{LL}	Latch Enable Width	100		ns
t_{RDF}	Data Bus Float After READ	0	100	ns
t_{CL}	READ/WRITE Control to Latch Enable	20		ns
t_{CC}	READ/WRITE Control Width	250		ns
t_{DW}	Data In to WRITE Set Up Time	150		ns
t_{WD}	Data In Hold Time After WRITE	0		ns
t_{RV}	Recovery Time Between Controls	300		ns
t_{WP}	WRITE to Port Output		400	ns
t_{PR}	Port Input Setup Time	70		ns
t_{RP}	Port Input Hold Time	50		ns
t_{SBF}	Strobe to Buffer Full		400	ns
t_{SS}	Strobe Width	200		ns
t_{RBE}	READ to Buffer Empty		400	ns
t_{SI}	Strobe to INTR On		400	ns

A.C. CHARACTERISTICS (Continued) (T_A = -55°C to +125°C; V_{CC} = 5V ±10%)

		M8155H		
Symbol	**Parameter**	**Min**	**Max**	**Units**
t_{RDI}	READ to INTR Off		400	ns
t_{PSS}	Port Setup Time to Strobe Strobe	50		ns
t_{PHS}	Port Hold Time After Strobe	120		ns
t_{SBE}	Strobe to Buffer Empty		400	ns
t_{WBF}	WRITE to Buffer Full		400	ns
t_{WI}	WRITE to INTR Off		400	ns
t_{TL}	TIMER-IN to $\overline{\text{TIMER-OUT}}$ Low		400	ns
t_{TH}	TIMER-IN to $\overline{\text{TIMER-OUT}}$ High		400	ns
t_{RDE}	Data Bus Enable from READ Control	10		ns
t_1	TIMER-IN Low Time	80		ns
t_2	TIMER-IN High Time	120		ns

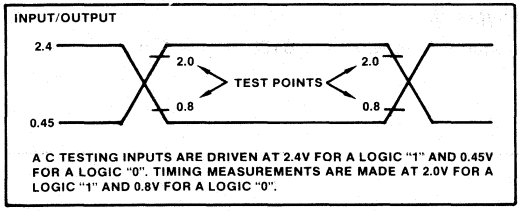

Figure 4. A.C. Testing Input, Output Waveform

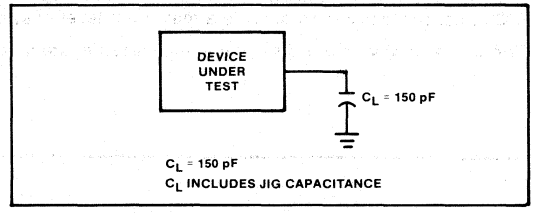

Figure 5. A.C. Testing Load Circuit

WAVEFORMS

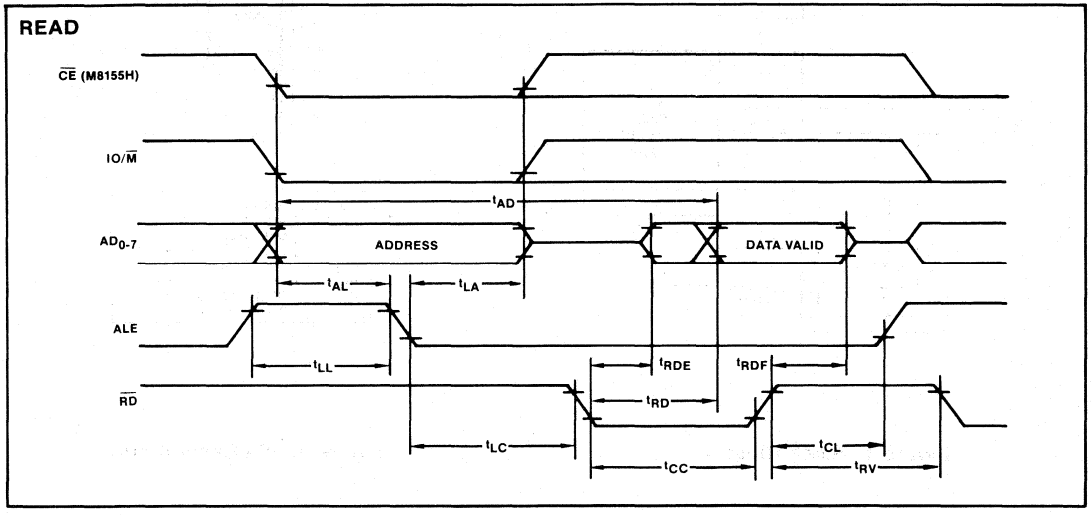

AFN-02056A

M8185*
1024 x 8-BIT STATIC RAM FOR MCS-85®

*Compatible with 8085A.
MILITARY

- **Multiplexed Address and Data Bus**
- **Directly Compatible with 8085A and 8088 Microprocessors**
- **Low Operating Power Dissipation**
- **Low Standby Power Dissipation**
- **Single +5V Supply**
- **High Density 18-Pin Package**
- **Military Temperature Range: −55° C to +125° C**

The Intel® M8185 is an 8192-bit static random access memory (RAM) organized as 1024 words by 8-bits using N-channel Silicon-Gate MOS technology. The multiplexed address and data bus allows the 8185 to interface directly to the 8085A and 8088 microprocessors to provide a maximum level of system integration.

The low standby power dissipation minimizes system power requirements when the 8185 is disabled.

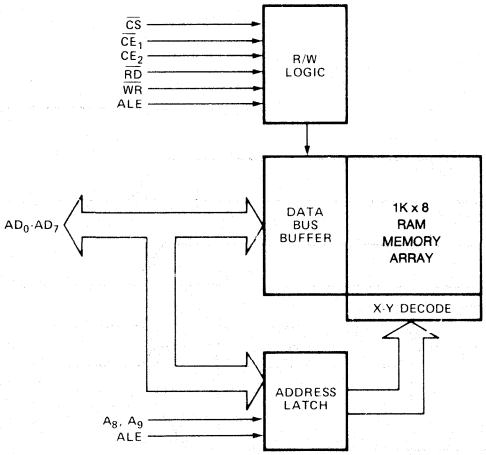

Figure 1. Block Diagram

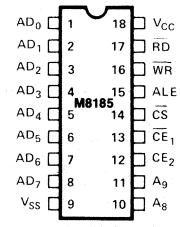

AD_0-AD_7	ADDRESS/DATA LINES
A_8, A_9	ADDRESS LINES
$\overline{CS}$	CHIP SELECT
$\overline{CE}_1$	CHIP ENABLE (IO/$\overline{M}$)
CE_2	CHIP ENABLE
ALE	ADDRESS LATCH ENABLE
$\overline{RD}$	READ ENABLE
$\overline{WR}$	WRITE ENABLE

Figure 2. Pin Configuration

ABSOLUTE MAXIMUM RATINGS*

Temperature Under Bias ..... -55°C to +125°C
Storage Temperature ..... -65°C to +150°C
Voltage on Any Pin
with Respect to Ground ..... -0.5V to +7V
Power Dissipation 1.5W

NOTICE: Stresses above those listed under "Absolute Maximum Ratings" may cause permanent damage to the device. This is a stress rating only and functional operation of the device at these or any other conditions above those indicated in the operational sections of this specification is not implied. Exposure to absolute maximum rating conditions for extended periods may affect device reliability.

D.C. CHARACTERISTICS (T_A = −55°C to +125°C, V_{CC}=5V ±10%)

Symbol	Parameter	Min.	Max.	Units	Test Conditions
V_{IL}	Input Low Voltage	-0.5	0.8	V	
V_{IH}	Input High Voltage	2.2	V_{CC}+0.5	V	
V_{OL}	Output Low Voltage		0.45	V	I_{OL}= 1.6 mA
V_{OH}	Output High Voltage	2.4			I_{OH} = −400μA
I_{IL}	Input Leakage		±10	μA	$V_{IN} = V_{CC}$
I_{LO}	Output Leakage Current		±10	μA	0.45V ≤ V_{OUT} ≤ V_{CC}
I_{CC}	V_{CC} Supply Current Powered Up		150	mA	
	Powered Down		50	mA	

A.C. CHARACTERISTICS (T_A = −55°C to +125°C, V_{CC}=5V ±10%)

Symbol	Parameter[1]	8185 Preliminary		Units
		Min.	Max.	
t_{AL}	Address to Latch Set Up Time	50		ns
t_{LA}	Address Hold Time after Latch	80		ns
t_{LC}	Latch to READ/WRITE Control	100		ns
t_{RD}	Valid Data Out Delay from READ Control		170	ns
t_{LD}	ALE to Data Out Valid		300	ns
t_{LL}	Latch Enable Width	100		ns
t_{RDF}	Data Bus Float after READ	0	100	ns
t_{CL}	READ/WRITE Control to Latch Enable	20		ns
t_{CC}	READ/WRITE Control Width	250		ns
t_{DW}	Data In to Write Set Up Time	150		ns
t_{WD}	Data In Hold Time after WRITE	20		ns
t_{SC}	Chip Select Set Up to Control Line	10		ns
t_{CS}	Chip Select Hold Time after Control	10		ns
t_{ALCE}	Chip Enable Set Up to ALE Falling	30		ns
t_{LACE}	Chip Enable Hold Time after ALE	50		ns

NOTES:
1. All A.C. parameters are referenced at
   a) 2.4V and .45V for inputs
   b) 2.0V and .8V for outputs.

M8212
8-BIT INPUT/OUTPUT PORT

MILITARY

- **Fully Parallel 8-Bit Data Register and Buffer**
- **Service Request Flip-Flop for Interrupt Generation**
- **Low Input Load Current 0.25mA Max**
- **3-State Outputs**
- **Military Temperature Range -55°C to +125°C**
- **3.4V Output High Voltage for Direct Interface to M8080A CPU**
- **Asynchronous Register Clear**
- **Replaces Buffers, Latches, and Multiplexers in Microcomputer Systems**
- **Reduces System Package Count**
- **±10% Power Supply Tolerance**
- **24-Pin Dual In-Line Package**

The Intel® M8212/M3212 input/output port consists of an 8-bit latch with 3-state output buffers along with control and device selection logic. Also included is a service request flip-flop for the generation and control of interrupts to the microprocessor.

The device is multimode in nature. It can be used to implement latches, gated buffers or multiplexers. Thus, all of the principal peripheral and input/output functions of a microcomputer system can be implemented with this device.

*Note: The specifications for the M3212 are identical with those for the M8212.

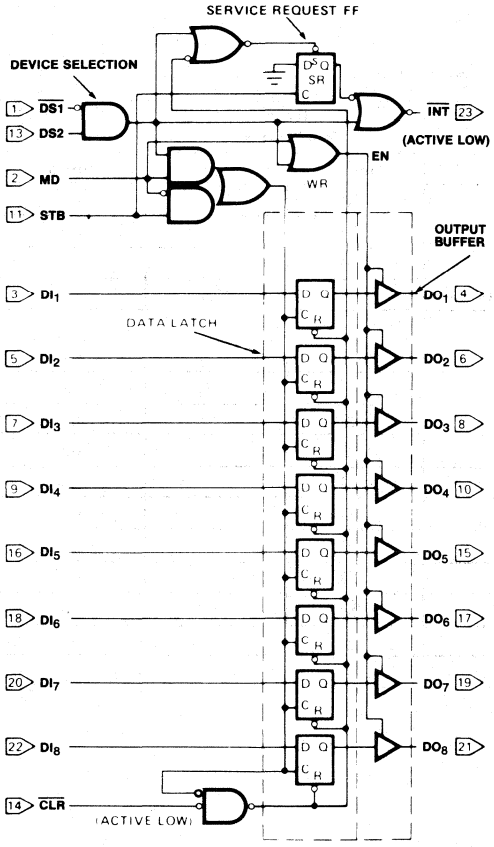

Figure 1. Logic Diagram

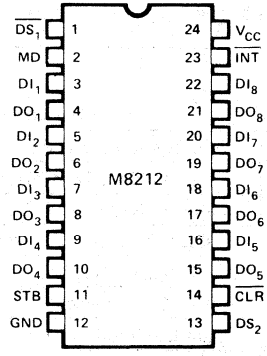

DI_1 DI_8	DATA IN
DO_1 DO_8	DATA OUT
$\overline{DS_1}$ DS_2	DEVICE SELECT
MD	MODE
STB	STROBE
$\overline{INT}$	INTERRUPT (ACTIVE LOW)
$\overline{CLR}$	CLEAR (ACTIVE LOW)

Figure 2. Pin Configuration

ABSOLUTE MAXIMUM RATINGS*

Temperature Under Bias . . . . . −55°C to +125°C
Storage Temperature . . . . . −65°C to +160°C
All Output or Supply Voltages . . . . −0.5 to +7 Volts
All Input Voltages . . . . . −1.0 to 5.5 Volts
Output Currents . . . . . 100 mA

NOTICE: Stresses above those listed under "Absolute Maximum Ratings" may cause permanent damage to the device. This is a stess rating only and functional operation of the device at these or any other conditions above those indicated in the operational sections of this specification is not implied. Exposure to absolute maximum rating conditions for extended periods may affect device reliability.

D.C. CHARACTERISTICS (T_A = −55°C to +125°C, V_{CC} = +5V ±10%)

Symbol	Parameter	Limits			Unit	Test Conditions
		Min.	Typ.	Max.		
I_F	Input Load Current STB, DS_2, CR, DI_1-DI_8 Inputs			−.25	mA	V_F = .45V
I_F	Input Load Current MD Input			−.75	mA	V_F = .45V
I_F	Input Load Current DS_1 Input			−1.0	mA	V_F = .45V
I_R	Input Leakage Current STB, DS, CR, DI_1-DI_8 Inputs			10	μA	V_R = V_{CC}
I_R	Input Leakage Current MD Input			30	μA	V_R = V_{CC}
I_R	Input Leakage Current DS_1 Input			40	μA	V_R = V_{CC}
V_C	Input Forward Voltage Clamp			−1.2	V	I_C = −5 mA
V_{IL}	Input "Low" Voltage			.80	V	
V_{IH}	Input "High" Voltage	2.0			V	
V_{OL}	Output "Low" Voltage			.45	V	I_{OL} = 10mA
V_{OH}	Output "High" Voltage	3.5	4.0		V	I_{OH} = -.5mA
I_{OS}	Short Circuit Output Current	-15		-75	mA	V_{CC} = 5.0V
$\|I_O\|$	Output Leakage Current High Impedance State			20	μA	V_O = .45V to V_{CC}
I_{CC}	Power Supply Current		90	145	mA	

CAPACITANCE (F = 1 MHz, V_{BIAS} = 2.5V, V_{CC} = + 5V, T_A = 25°C)

Symbol	Test	LIMITS	
		Typ.	Max.
C_{IN}	$\overline{DS_1}$ MD Input Capacitance	9 pF	15 pF
C_{IN}	DS_2, $\overline{CLR}$, STB, DI_1-DI_8 Input Capacitance	5 pF	10 pF
C_{OUT}	DO -DO_8 Output Capacitance	8 pF	15 pF

Conditions of Test
Input Pulse Amplitude = 2.5V
Input Rise and Fall Times: 5 ns between 1V and 2V
Measurements made at 1.5V

A.C. CHARACTERISTICS (T_A = −55°C to +125°C, V_{CC} = +5V ±10%)

Symbol	Parameter	Limits		Unit	Test Conditions
		Min.	Max.		
t_{PW}	Pulse Width	40		ns	
t_{PD}	Data To Output Delay		30	ns	NOTE 1
t_{WE}	Write Enable To Output Delay		50	ns	NOTE 1
t_{SET}	Data Setup Time	20		ns	
t_H	Data Hold Time	30		ns	
t_R	Reset To Output Delay		55	ns	NOTE 1
t_S	Set To Output Delay		35	ns	NOTE 1
t_E	Output Enable/Disable Time		50	ns	NOTE 1 C_L = 30 pF
t_C	Clear To Output Delay		55	ns	NOTE 1

NOTE 1:

TEST	C_L	R_1	R_2
t_{PD}, t_{WE}, t_R, t_S, t_C	30pF	300Ω	600Ω
t_E, ENABLE↑	30pF	10KΩ	1KΩ
t_E, ENABLE↓	30pF	300Ω	600Ω
t_E, DISABLE↑	5pF	300Ω	600Ω
t_E, DISABLE↓	5pF	10KΩ	1KΩ

A.C. TESTING LOAD CIRCUIT

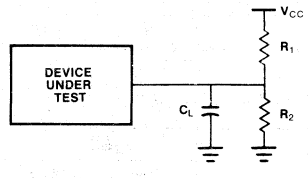

WAVEFORMS

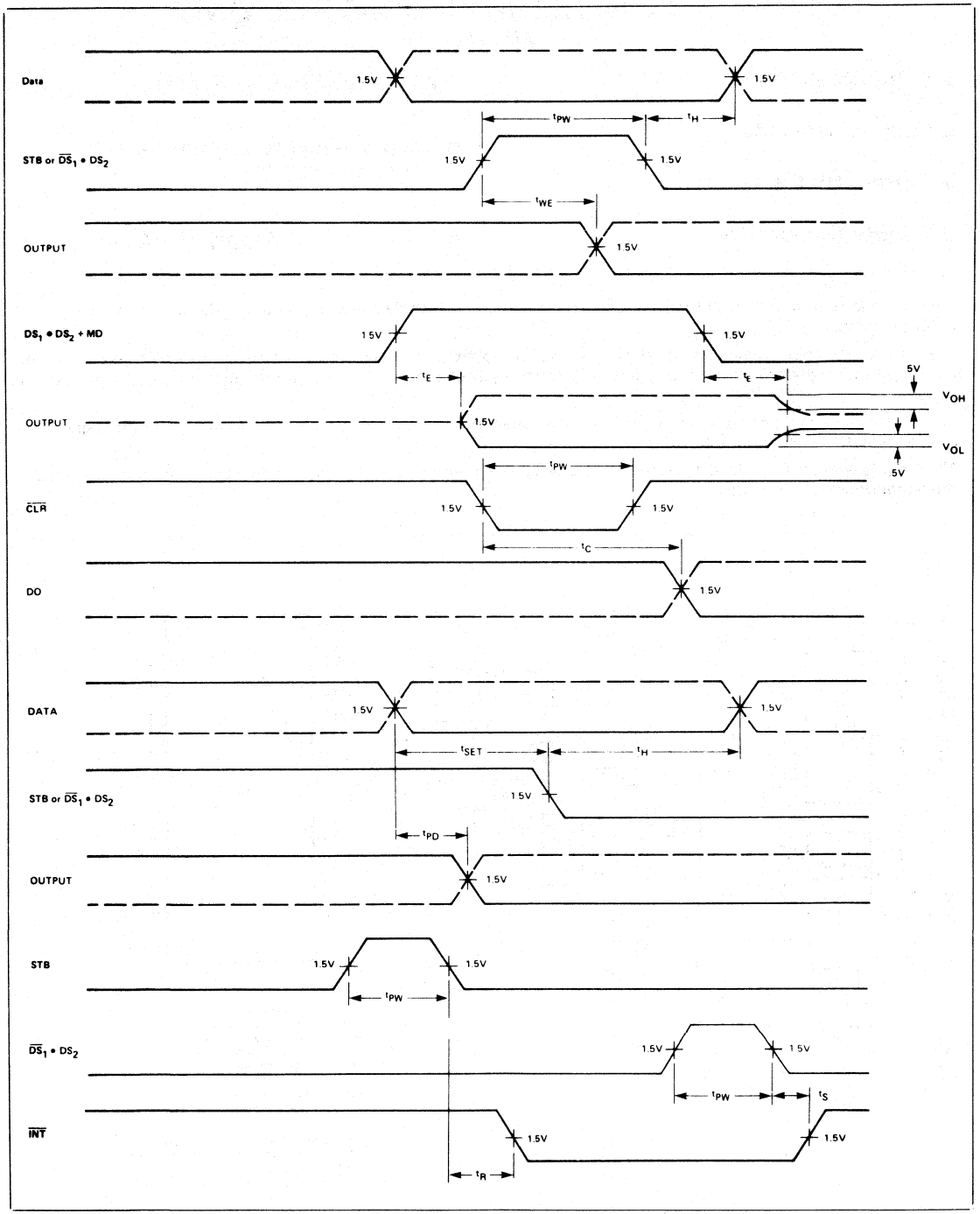
Data
1.5V
1.5V
tPW
tH
STB or $\overline{DS_1} \cdot DS_2$
1.5V
1.5V
tWE
OUTPUT
1.5V
$DS_1 \cdot DS_2 + MD$
1.5V
1.5V
tE
tE
5V
VOH
OUTPUT
1.5V
VOL
5V
tPW
$\overline{CLR}$
1.5V
1.5V
tC
DO
1.5V
DATA
1.5V
1.5V
tSET
tH
STB or $\overline{DS_1} \cdot DS_2$
1.5V
tPD
OUTPUT
1.5V
STB
1.5V
1.5V
tPW
$\overline{DS_1} \cdot DS_2$
1.5V
1.5V
tPW
tS
$\overline{INT}$
1.5V
1.5V
tR

M8214
PRIORITY INTERRUPT CONTROL UNIT
MILITARY

- **8 Priority Levels**
- **Fully Expandable**
- **Current Status Register**
- **Priority Comparator**
- **24-Pin Dual In-Line Package**
- **Military Temperature Range: −55°C to +125°C**
- **+10% Power Supply Tolerance**

The Intel® M8214 is an 8-level priority interrupt control unit (PICU) designed to simplify interrupt-driven microcomputer systems.

The PICU can accept 8 requesting levels; determine the highest priority, compare this priority to a software controlled current status register and issue and interrupt to the system along with vector information to identify the service routine.

The M8214 is fully expandable by the use of open collector interrupt output vector information. Control signals are also provided to simplify this function.

The PICU is designed to support a wide variety of vectored interrupt structures and reduce package count in interrupt-driven microcomputer systems.

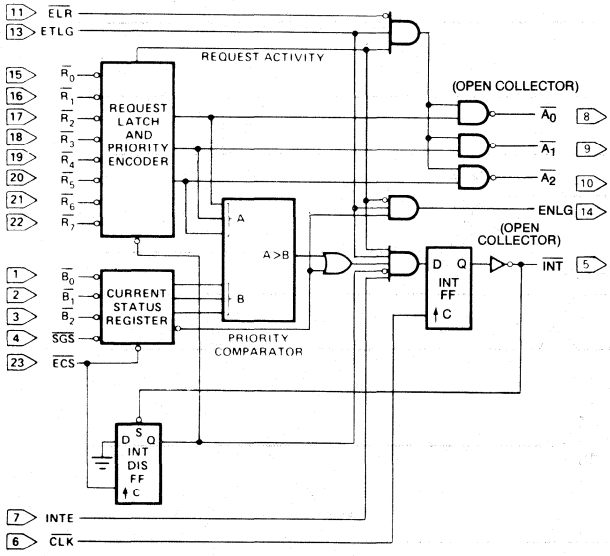

Figure 1. Logic Diagram

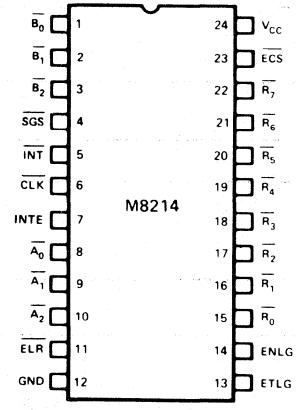

INPUTS	
$\overline{R_0}$-$\overline{R_7}$	REQUEST LEVELS (R_7 HIGHEST PRIORITY)
$\overline{B_0}$-$\overline{B_2}$	CURRENT STATUS
$\overline{SGS}$	STATUS GROUP SELECT
$\overline{ECS}$	ENABLE CURRENT STATUS
INTE	INTERRUPT ENABLE
$\overline{CLK}$	CLOCK (INT F.F)
$\overline{ELR}$	ENABLE LEVEL READ
ETLG	ENABLE THIS LEVEL GROUP
OUTPUTS	
$\overline{A_0}$-$\overline{A_2}$	REQUEST LEVELS (OPEN COLLECTOR)
$\overline{INT}$	INTERRUPT (ACT LOW) (OPEN COLLECTOR)
ENLG	ENABLE NEXT LEVEL GROUP

Figure 2. Pin Configuration

Intel Corporation Assumes No Responsibilty for the Use of Any Circuitry Other Than Circuitry Embodied in an Intel Product. No Other Circuit Patent Licenses are Implied.
© INTEL CORPORATION, 1980

ABSOLUTE MAXIMUM RATINGS*

Temperature Under Bias . . . . . −55°C to +125°C
Storage Temperature . . . . . −65°C to +160°C
All Output and Supply Voltages . . . . . −0.5V to +7V
All Input Voltages . . . . . −1.0V to +5.5V
Output Currents . . . . . 100 mA

NOTICE: Stresses above those listed under "Absolute Maximum Ratings" may cause permanent damage to the device. This is a stress rating only and functional operation of the device at these or any other conditions above those indicated in the operational sections of this specification is not implied. Exposure to absolute maximum rating conditions for extended periods may affect device reliability.

D.C. CHARACTERISTICS (T_A = 55°C to 125°C, V_{CC} = 5V ±10%)

Symbol	Parameter	Limits			Unit	Conditions
		Min.	Typ.[1]	Max.		
V_C	Input Clamp Voltage (all inputs)			-1.2	V	I_C=-5mA
I_F	Input Forward Current: ETLG input all other inputs		-.15 -.08	-0.5 -0.25	mA mA	V_F=0.45V
I_R	Input Reverse Current: ETLG input all other inputs			80 40	μA μA	V_R=5.5V
V_{IL}	Input LOW Voltage: all inputs			0.8	V	V_{CC}=5.0V
V_{IH}	Input HIGH Voltage: all inputs	2.0			V	V_{CC}=5.0V
I_{CC}	Power Supply Current		90	130	mA	See Note 2.
V_{OL}	Output LOW Voltage: all outputs		.3	.45	V	I_{OL}=10mA
V_{OH}	Output HIGH Voltage: ENLG output	2.4	3.0		V	I_{OH}=-1mA
I_{OS}	Short Circuit Output Current: ENLG output	-15	-35	-55	mA	V_{CC}=5.0V
I_{CEX}	Output Leakage Current: $\overline{INT}$, $\overline{A_0}$, $\overline{A_1}$, $\overline{A_2}$			100	μA	V_{CEX}=5.5V

CAPACITANCE (V_{BIAS} = 2.5V, V_{CC} = 5V, T_A = 25°C, f = 1 MHz)

Symbol	Parameter	Limits			Unit
		Min.	Typ.[1]	Max	
C_{IN}	Input Capacitance		5	10	pF
C_{OUT}	Output Capacitance Except ENLG (Pin 14)		7	12	pF

A.C. CHARACTERISTICS (T_A = −55°C to +125°C, V_{CC} = +5V ±10%)

Symbol	Parameter	Limits			Unit
		Min.	Typ.[1]	Max.	
t_{CY}	$\overline{CLK}$ Cycle Time	85			ns
t_{PW}	$\overline{CLK}$, $\overline{ECS}$, $\overline{INT}$ Pulse Width	25	15		ns
t_{ISS}	INTE Setup Time to $\overline{CLK}$	16	12		ns
t_{ISH}	INTE Hold Time after $\overline{CLK}$	20	10		ns
t_{ETCS}[2]	ETLG Setup Time to $\overline{CLK}$	25	12		ns
t_{ETCH}[2]	ETLG Hold Time After $\overline{CLK}$	20	10		ns
t_{ECCS}[2]	$\overline{ECS}$ Setup Time to $\overline{CLK}$	85	25		ns
t_{ECCH}	$\overline{ECS}$ Hold Time After $\overline{CLK}$	0			ns
t_{ECRS}	$\overline{ECS}$ Setup Time to $\overline{CLK}$	110	70		ns
t_{ECRH}	$\overline{ECS}$ Hold Time After $\overline{CLK}$	0			
t_{ECSS}[2]	$\overline{ECS}$ Setup Time to $\overline{CLK}$	85	70		ns
t_{ECSH}[2]	$\overline{ECS}$ Hold Time After $\overline{CLK}$	0			ns
t_{DCS}[2]	$\overline{SGS}$ and $\overline{B_0}$-$\overline{B_2}$ Setup Time to $\overline{CLK}$	90	50		ns
t_{DCH}[2]	$\overline{SGS}$ and $\overline{B_0}$-$\overline{B_2}$ Hold Time After $\overline{CLK}$	0			ns
t_{RCS}	$\overline{R_0}$-$\overline{R_7}$ Setup Time to $\overline{CLK}$	100	55		ns
t_{RCH}	$\overline{R_0}$-$\overline{R_7}$ Hold Time After $\overline{CLK}$	0			ns
t_{ICS}	$\overline{INT}$ Setup Time to $\overline{CLK}$	55	35		ns
t_{CI}	$\overline{CLK}$ to $\overline{INT}$ Propagation Delay		15	30	ns
t_{RIS}	$\overline{R_0}$-$\overline{R_7}$ Setup Time to $\overline{INT}$	10	0		ns
t_{RIH}	$\overline{R_0}$-$\overline{R_7}$ Hold Time After $\overline{INT}$	35	20		ns
t_{RA}	$\overline{R_0}$-$\overline{R_7}$ to $\overline{A_0}$-$\overline{A_2}$ Propagation Delay		80	100	ns
t_{ELA}	$\overline{ELR}$ to $\overline{A_0}$-$\overline{A_2}$ Propagation Delay		40	55	ns
t_{ECA}	$\overline{ECS}$ to $\overline{A_0}$-$\overline{A_2}$ Propagation Delay		100	130	ns
t_{ETA}	ETLG to $\overline{A_0}$-$\overline{A_2}$ Propagation Delay		35	70	ns
t_{DECS}	$\overline{SGS}$ and $\overline{B_0}$-$\overline{B_2}$ Setup Time to $\overline{ECS}$	20	10		ns
t_{DECH}	$\overline{SGS}$ and $\overline{B_0}$-$\overline{B_2}$ Hold Time After $\overline{ECS}$	20	10		ns
t_{REN}	$\overline{R_0}$-$\overline{R_7}$ to ENLG Propagation Delay		45	70	ns
t_{ETEN}	ETLG to ENLG Propagation Delay		20	30	ns
t_{ECRN}	$\overline{ECS}$ to ENLG Propagation Delay		85	110	ns
t_{ECSN}	$\overline{ECS}$ to ENLG Propagation Delay		35	55	ns

NOTES:
1. Typical values are for T_A = 25° C, V_{CC} = 5.0V.
2. B_0-B_2, $\overline{SGS}$, CLK, $\overline{R_0}$-$\overline{R_4}$ grounded, all other inputs and all outputs open.

M8216/M8226
4-BIT PARALLEL BIDIRECTIONAL BUS DRIVER

MILITARY

- **Data Bus Buffer Driver for 8080 CPU**
- **Low Input Load Current: 0.25mA Maximum**
- **High Output Drive Capability for Driving System Data Bus**
- **16-Pin Dual In-Line Package**
- **3.40V Output High Voltage for Direct Interface to 8080 CPU**
- **3-State Outputs**
- **Military Temperature Range: −55°C to +125°C**
- **±10% Power Supply Tolerance**

The M8216/M8226 is a 4-bit bidirectional bus driver/receiver. All inputs are low power TTL compatible. For driving MOS, the DO outputs provide a high 3.40V V_{OH}, and for high capacitance terminated bus structures, the DB outputs provide a high 50 mA I_{OL} capability. A non-inverting (M8216) and an inverting (M8226) are available to meet a wide variety of applications for buffering in microcomputer systems.

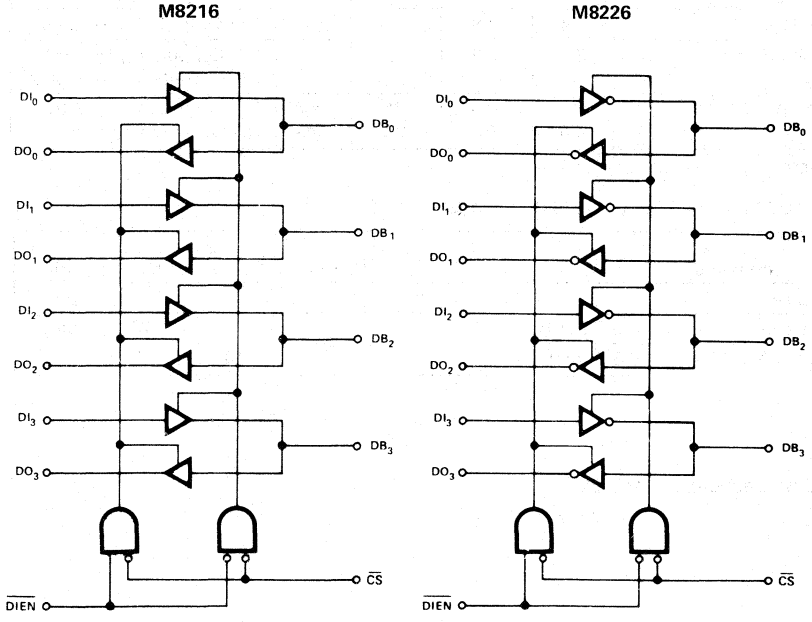

Figure 1. Logic Diagrams

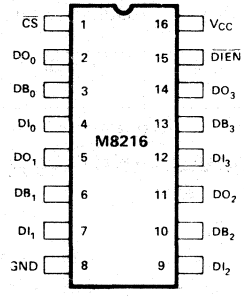

DB_0-DB_3	DATA BUS BI-DIRECTIONAL
DI_0-DI_3	DATA INPUT
DO_0-DO_3	DATA OUTPUT
$\overline{DIEN}$	DATA IN ENABLE DIRECTION CONTROL
$\overline{CS}$	CHIP SELECT

Figure 2. Pin Configuration

ABSOLUTE MAXIMUM RATINGS*

Temperature Under Bias . . . . . −55°C to +125°C
Storage Temperature . . . . . −65°C to +160°C
All Output and Supply Voltages . . . . . −0.5V to +7V
All Input Voltages . . . . . −1.0V to +5.5V
Output Currents . . . . . 125 mA

NOTICE: Stresses above those listed under "Absolute Maximum Ratings" may cause permanent damage to the device. This is a stress rating only and functional operation of the device at these or any other conditions above those indicated in the operational sections of this specification is not implied. Exposure to absolute maximum rating conditions for extended periods may affect device reliability.

D.C. CHARACTERISTICS (T_A = −55°C to +125°C, V_{CC} = +5V ±10%)

Symbol	Parameter	Limits Min.	Typ.	Max.	Unit	Conditions
I_{F1}	Input Load Current $\overline{DIEN}$, $\overline{CS}$		-0.15	-.5	mA	V_F = 0.45
I_{F2}	Input Load Current All Other Inputs		-0.08	-.25	mA	V_F = 0.45
I_{R1}	Input Leakage Current $\overline{DIEN}$, $\overline{CS}$			20	μA	V_R = 5.5V
I_{R2}	Input Leakage Current DI Inputs			10	μA	V_R = 5.5V
V_C	Input Forward Voltage Clamp			-1.2	V	I_C = -5mA
V_{IL}	Input "Low" Voltage M8216			.95	V	V_{CC} = 5V
V_{IL}	Input "Low" Voltage M8226			.90	V	V_{CC} = 5V
V_{IH}	Input "High" Voltage	2.0			V	V_{CC} = 5V
$\|I_O\|$	Output Leakage Current (3-State) DO DB			20 100	μA	V_O = .45V to V_{CC}
I_{CC}	Power Supply Current M8216		95	130	mA	
I_{CC}	Power Supply Current M8226		85	120	mA	
V_{OL1}	Output "Low" Voltage		0.3	.45	V	DO Outputs I_{OL} = 15mA DB Outputs I_{OL} = 25mA
V_{OL2}	Output "Low" Voltage		0.5	.6	V	DB Outputs I_{OL} = 45mA
V_{OH}	Output "High" Voltage	3.4	3.8		V	DO Outputs I_{OH} = -.5mA
V_{OH2}	Output "High" Voltage	2.4	3.0		V	DO Outputs I_{OH} = -2mA DB Outputs I_{OH} = -5.0mA
I_{OS}	Output Short Circuit Current	-15 -30	-35 -75	-65 -120	mA mA	DO Outputs V_{CC} = 5.0V DB Outputs V_{CC} = 5.0V

NOTE: Typical values are for T_A = 25°C, V_{CC} = 5.0V.

CAPACITANCE (V_{BIAS} = 2.5V, V_{CC} = 5.0V, T_A = 25°C, f = 1 MHz)

Symbol	Parameter		Limits Min.	Typ.[1]	Max.	Unit
C_{IN}	Input Capacitance			4	6	pF
C_{OUT1}	Output Capacitance	DO Outputs		6	10	pF
C_{OUT2}	Output Capacitance	DB Outputs		13	18	pF

Conditions of Test
Input Pulse Amplitude = 2.5V
Input Rise and Fall Times: 5 ns between 1V and 2V
Measurements made at 1.5V

A.C. CHARACTERISTICS (T_A = −55°C to +125°C, V_{CC} = +5V ±10%)

Symbol	Parameter	Limits			Unit	Conditions
		Min.	Typ.[1]	Max.		
T_{PD1}	Input to Output Delay DO Outputs		15	25	ns	(NOTE 2)
T_{PD2}	Input to Output Delay DB Outputs M8216		19	33	ns	(NOTE 2)
T_{PD2}	Input to Output Delay DB Outputs M8226		16	25	ns	(NOTE 2)
T_E	Output Enable Time M8216		42	75	ns	(NOTE 2)
T_E	Output Enable Time M8226		36	62	ns	(NOTE 2)
T_D	Output Disable Time M8216		16	40	ns	(NOTE 2)
T_D	Output Disable Time M8226		16	38	ns	(NOTE 2)

NOTES:

1. Typical values are for T_A = 25°C, V_{CC} = 5.0V.
2.

TEST	C_L	R_1	R_2
T_{PD1}	30pF	300Ω	600Ω
T_{PD2}	300pF	90Ω	180Ω
T_E, (DO, ENABLE↑)	30pF	10KΩ	1KΩ
T_E, (DO, ENABLE↓)	30pF	300Ω	600Ω
T_E, (DB, ENABLE↑)	300pF	10KΩ	1KΩ
T_E, (DB, ENABLE↓)	300pF	90Ω	180Ω
T_D, (DO, DISABLE↑)	5pF	300Ω	600Ω
T_D, (DO, DISABLE↓)	5pF	10KΩ	1KΩ
T_D, (DB, DISABLE↑)	5pF	90Ω	180Ω
T_D, (DB, DISABLE↓)	5pF	10KΩ	1KΩ

A.C. TESTING LOAD CIRCUIT

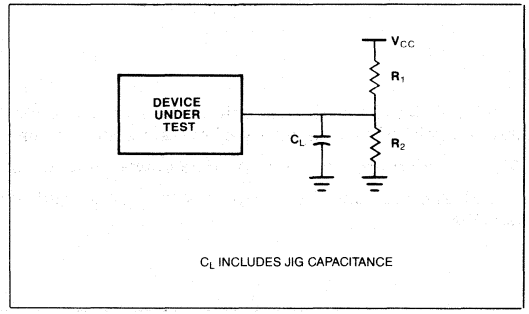

WAVEFORMS

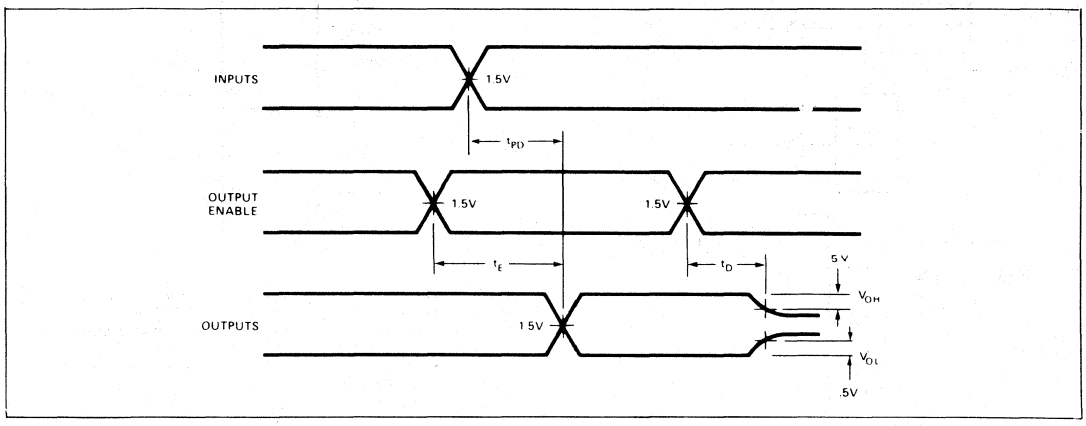

M8224
CLOCK GENERATOR AND DRIVER

For 8080A CPU

MILITARY

- **Single Chip Clock Generator/Driver for M8080A CPU**
- **Power-Up Reset for CPU**
- **Ready Synchronizing Flip-Flop**
- **Advanced Status Strobe**
- **Military Temperature Range: −55°C to +100°C**
- **Oscillator Output for External System Timing**
- **Crystal Controlled for Stable System Operation**
- **Reduces System Package Count**
- **±10% Power Supply Tolerance**

The Intel® M8224 is a single chip clock generator/driver for the M8080A CPU. It is controlled by a crystal, selected by the designer to meet a variety of system speed requirements.

Also included are circuits to provide power-up reset, advance status trobe, and synchronization of ready.

The M8224 provides the designer with a significant reduction of packages used to generate clocks and timing for M8080A.

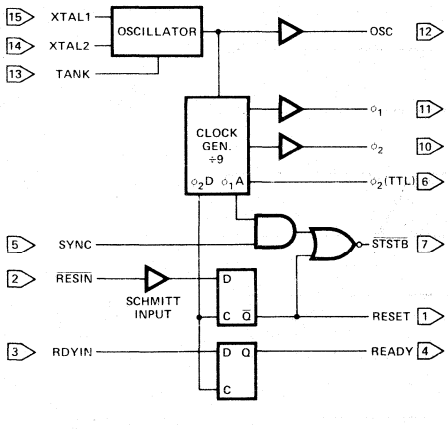

Figure 1. Block Diagram

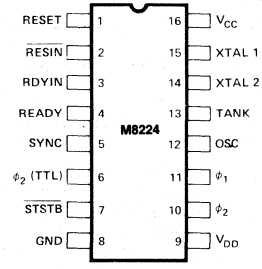

RESIN	RESET INPUT
RESET	RESET OUTPUT
RDYIN	READY INPUT
READY	READY OUTPUT
SYNC	SYNC INPUT
STSTB	STATUS STB (ACTIVE LOW)
ϕ_1	8080 CLOCKS
ϕ_2	8080 CLOCKS

XTAL 1	CONNECTIONS FOR CRYSTAL
XTAL 2	CONNECTIONS FOR CRYSTAL
TANK	USED WITH OVERTONE XTAL
OSC	OSCILLATOR OUTPUT
ϕ_2 (TTL)	ϕ_2 CLK (TTL LEVEL)
V_{CC}	+5V
V_{DD}	+12V
GND	0V

Figure 2. Pin Configuration

ABSOLUTE MAXIMUM RATINGS*

Temperature Under Bias	-55°C to 125°C
Storage Temperature	-65°C to 150°C
Supply Voltage, V_{CC}	-0.5V to +7V
Supply Voltage, V_{DD}	-0.5V to +13.5V
Input Voltage	-1.0V to +7V
Output Current	100mA

**NOTICE: Stresses above those listed under "Absolute Maximum Ratings" may cause permanent damage to the device. This is a stress rating only and functional operation of the device at these or any other conditions above those indicated in the operational sections of this specification is not implied. Exposure to absolute maximum rating conditions for extended periods may affect device reliability.*

D.C. CHARACTERISTICS (T_A = −55°C to 125°C, V_{CC} = +5.0V ±10%, V_{DD} = +12V ±10%)

Symbol	Parameter	Limits Min.	Limits Typ.	Limits Max.	Units	Test Conditions
I_F	Input Current Loading			-.25	mA	V_F = .45V
I_R	Input Leakage Current			10	μA	V_R = 5.5V
V_C	Input Forward Clamp Voltage			−1.2	V	I_C = -5mA
V_{IL}	Input "Low" Voltage			.8	V	V_{CC} = 5.0V
V_{IH}	Input "High" Voltage $\overline{RESIN}$ All Other Inputs	2.6 2.0			V	
V_{IH}-V_{IL}	$\overline{RESIN}$ Input Hysteresis	.25			V	V_{CC} = 5.0V
V_{OL}	Output "Low" Voltage OSC, φ2 (TTL)			.45	V	I_{OL} = 10mA
	All Other Outputs			.45	V	I_{OL} = 2.5mA
V_{OH}	Output "High" Voltage					
	ϕ_1 , ϕ_2	9.0			V	I_{OH} = -100μA
	READY, RESET	3.3			V	I_{OH} = -100μA
	OSC, φ2 (TTL), $\overline{STSTB}$	2.4			V	I_{OH} = -1mA
I_{OS}[1]	Output Short Circuit Current (All Low Voltage Outputs Only)	-10		-60	mA	V_O = 0V V_{CC} = 5.0V
I_{CC}	Power Supply Current			115	mA	
I_{DD}	Power Supply Current			12	mA	

Note: 1. Caution, ϕ_1 and ϕ_2 output drivers do not have short circuit protection

Crystal Requirements

Tolerance: .005% at -55°C to 125°C
Resonance: Series (Fundamental)*
Load Capacitance: 20-35pF
Equivalent Resistance: 75-20 ohms
Power Dissipation (Min): 4mW

*With tank circuit use 3rd overtone mode.

A.C. CHARACTERISTICS (V_{CC} = +5.0 ±10%, V_{DD} = +12.0V ±10%, T_A = −55°C to +125°C)

Symbol	Parameter	Limits			Units	Test Conditions
		Min.	Typ.	Max.		
$t_{\phi 1}$	ϕ_1 Pulse Width	$\frac{2tcy}{9} - 20ns$			ns	C_L = 20pF to 50pF
$t_{\phi 2}$	ϕ_2 Pulse Width	$\frac{5tcy}{9} - 45ns$				
t_{D1}	ϕ_1 to ϕ_2 Delay	0				
t_{D2}	ϕ_2 to ϕ_1 Delay	$\frac{2tcy}{9} - 25ns$				
t_{D3}	ϕ_1 to ϕ_2 Delay	$\frac{2tcy}{9}$		$\frac{2tcy}{9} + 40ns$		
t_R	ϕ_1 and ϕ_2 Rise Time			25		
t_F	ϕ_1 and ϕ_2 Fall Time			25		
$t_{D\phi 2}$	ϕ_2 to ϕ_2 (TTL) Delay	-5		+15	ns	ϕ_2TTL,CL=30pF R_1=300Ω R_2=600Ω
t_{DSS}	ϕ_2 to $\overline{STSTB}$ Delay	$\frac{6tcy}{9} - 30ns$		$\frac{6tcy}{9}$		$\overline{STSTB}$, CL=15pF R_1 = 2K R_2 = 4K
t_{PW}	$\overline{STSTB}$ Pulse Width	$\frac{tcy}{9} - 23ns$				
t_{DRS}	RDYIN Setup Time to Status Strobe	$50ns - \frac{4tcy}{9}$				
t_{DRH}	RDYIN Hold Time After $\overline{STSTB}$	$\frac{4tcy}{9}$				
t_{DR}	READY or RESET to ϕ_2 Delay	$\frac{4tcy}{9} - 25ns$				CL=10pF R_1=2K R_2=4K
t_{CLK}	CLK Period		$\frac{tcy}{9}$			
f_{max}	Maximum Oscillating Frequency	27			MHz	
C_{in}	Input Capacitance			8	pF	V_{CC}=+5.0V V_{DD}=+12V V_{BIAS}=2.5V f=1MHz

Example:

A.C. CHARACTERISTICS (For t_{CY} = 488.28 ns)

(T_A = −55°C to 125°C, V_{CC} = +5.0V ±10%, V_{DD} = +12V ±10%)

Symbol	Parameter	Limits Min.	Typ.	Max.	Units	Test Conditions
$t_{\phi 1}$	ϕ_1 Pulse Width	89			ns	t_{CY}=488.28ns
$t_{\phi 2}$	ϕ_2 Pulse Width	226			ns	
t_{D1}	Delay ϕ_1 to ϕ_2	0			ns	
t_{D2}	Delay ϕ_2 to ϕ_1	84			ns	ϕ_1 & ϕ_2 Loaded to C_L = 20 to 50pF
t_{D3}	Delay ϕ_1 to ϕ_2 Leading Edges	109		149	ns	
t_r	Output Rise Time			25	ns	
t_f	Output Fall Time			25	ns	
t_{DSS}	ϕ_2 to $\overline{STSTB}$ Delay	296		326	ns	
$t_{D\phi 2}$	ϕ_2 to ϕ_2 (TTL) Delay	-5		+15	ns	
t_{PW}	Status Strobe Pulse Width	31			ns	Ready & Reset Loaded to 2mA/10pF
t_{DRS}	RDYIN Setup Time to $\overline{STSTB}$	-167			ns	All measurements referenced to 1.5V unless specified otherwise.
t_{DRH}	RDYIN Hold Time after $\overline{STSTB}$	217			ns	
t_{DR}	READY or RESET to ϕ_2 Delay	192			ns	

A.C. TESTING LOAD CIRCUIT

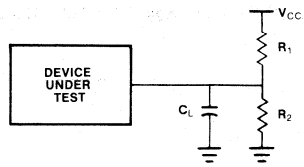

C_L INCLUDES JIG CAPACITANCE

WAVEFORMS

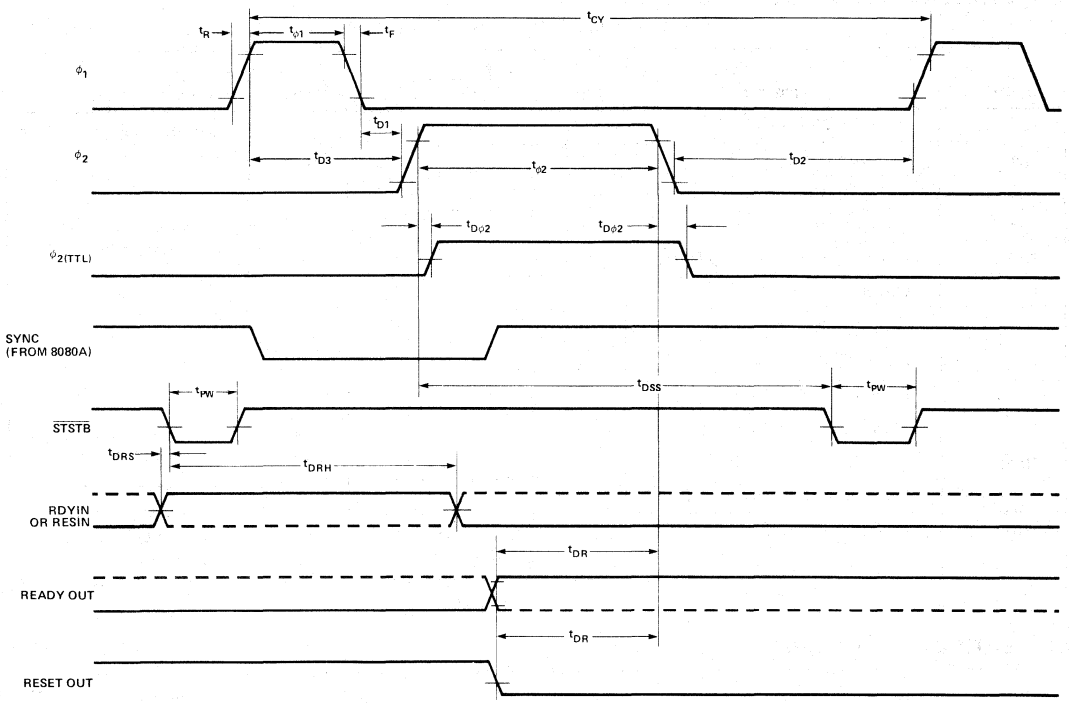

VOLTAGE MEASUREMENT POINTS: ϕ_1, ϕ_2 Logic "0" = 1.0V, Logic "1" = 7.0V. READY, RESET Logic "0" = 0.8V, Logic "1" = 3.0V. All other signals measured at 1.5V.

M8228
SYSTEM CONTROLLER AND BUS DRIVER FOR M8080A CPU

MILITARY

- **Single Chip System Control for MCS-80® Systems**
- **Built-In Bidirectional Bus Driver for Data Bus Isolation**
- **Allows the Use of Multiple Byte Instructions (e.g. CALL) for Interrupt Acknowledge**
- **User Selected Single Level Interrupt Vector (RST 7)**
- **28-Pin Dual In-Line Package**
- **Reduces System Package Count**
- **Military Temperature Range: −55°C to +125°C**
- **±10% Power Supply Tolerance**

The Intel® M8228 is a single chip system controller and bus driver for MCS-80®. It generates all signals required to directly interface MCS-80 family RAM, ROM, and I/O components.

A bidirectional bus driver is included to provide high system TTL fan-out. It also provides isolation of the 8080 data bus from memory and I/O. This allows for the optimization of control signals, enabling the systems designer to use slower memory and I/O. The isolation of the bus driver also provides for enhanced system noise immunity.

A user selected single level interrupt vector (RST 7) is provided to simplify real time, interrupt driven, small system requirements. The M8228 also generates the correct control signals to allow the use of multiple byte instructions (e.g., CALL) in response to an interrupt acknowledge by the M8080A. This feature permits large, interrupt driven systems to have an unlimited number of interrupt levels.

The M8228 is designed to support a wide variety of system bus structures and also reduce system package count for cost effective, reliable, design of the MCS-80 systems.

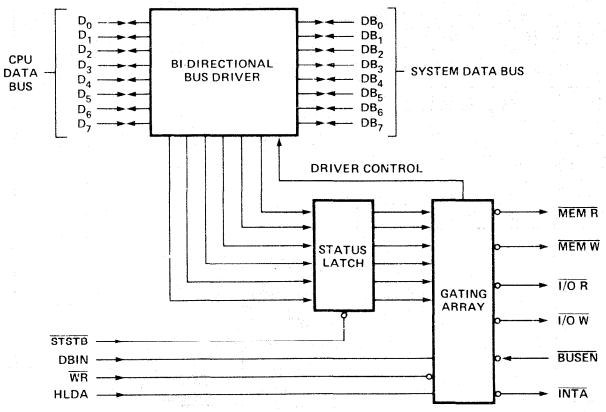

Figure 1. Block Diagram

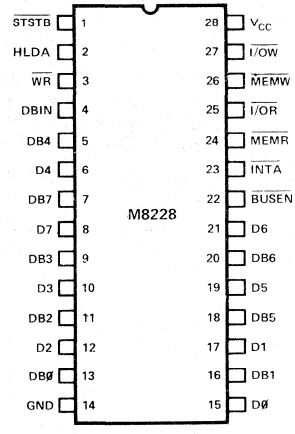

D7-D0	DATA BUS (8080 SIDE)
DB7-DB0	DATA BUS (SYSTEM SIDE)
I/OR	I/O READ
I/OW	I/O WRITE
MEMR	MEMORY READ
MEMW	MEMORY WRITE
DBIN	DBIN (FROM 8080)

INTA	INTERRUPT ACKNOWLEDGE
HLDA	HLDA (FROM 8080)
WR	WR (FROM 8080)
BUSEN	BUS ENABLE INPUT
STSTB	STATUS STROBE (FROM 8224)
VCC	+5V
GND	0 VOLTS

Figure 2. Pin Configuration

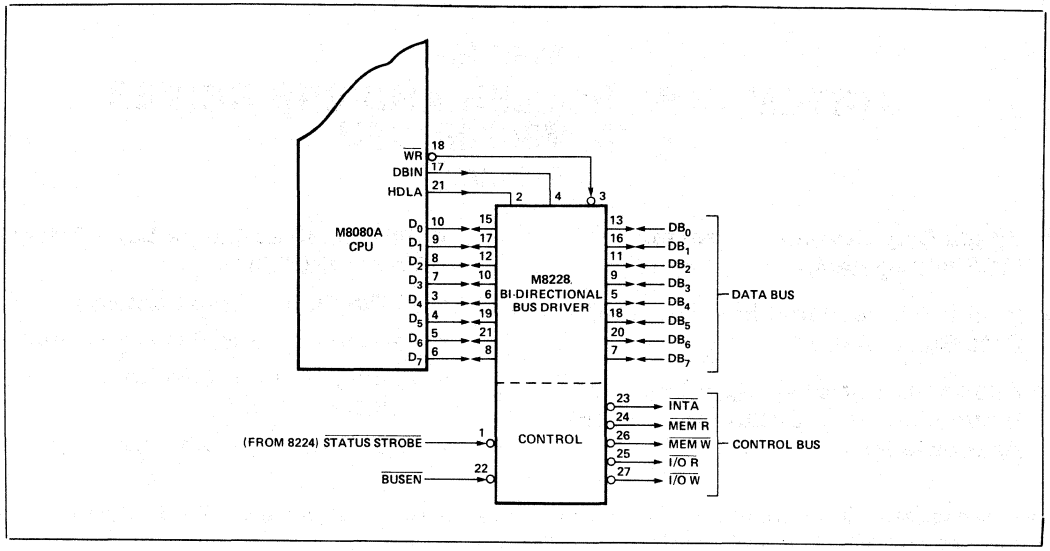

Figure 3. M8080A CPU Interface

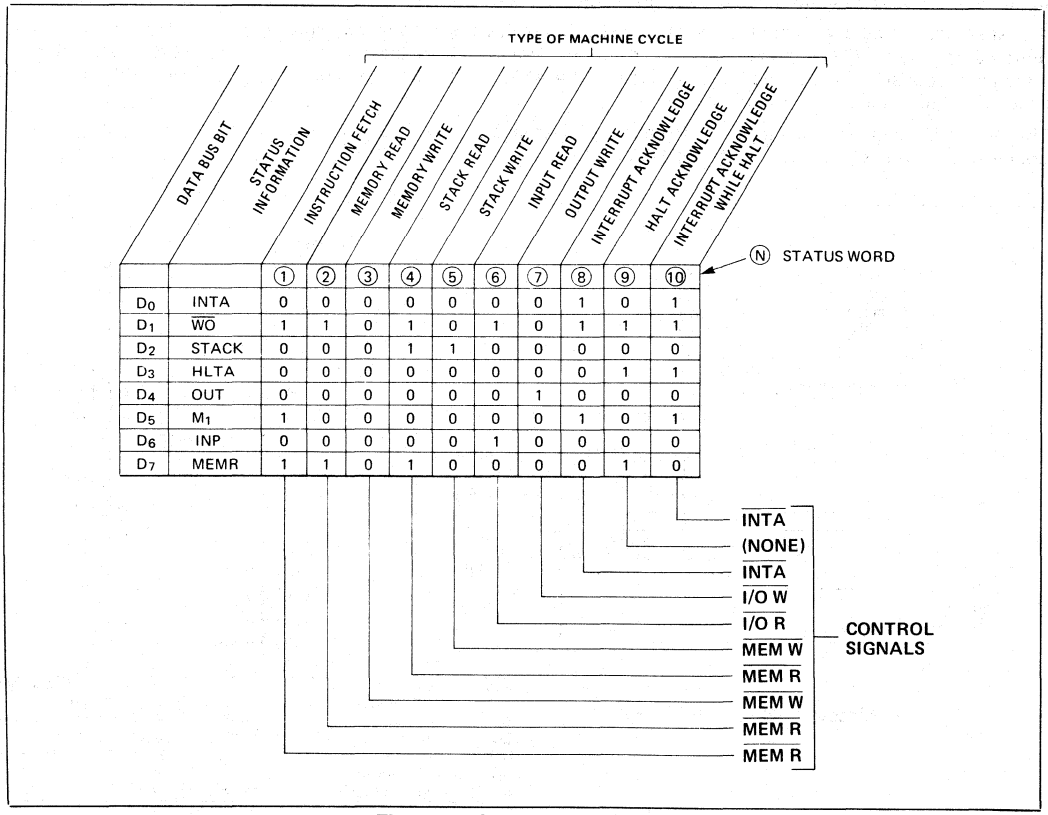

Figure 4. Status Word Chart

ABSOLUTE MAXIMUM RATINGS*

Temperature Under Bias . . . . . -55°C to 125°C
Storage Temperature . . . . . -65°C to 150°C
Supply Voltage, V_{CC} . . . . . -0.5V to +7V
Input Voltage . . . . . -1.0V to +7V
Output Current 100mA

**NOTICE: Stresses above those listed under "Absolute Maximum Ratings" may cause permanent damage to the device. This is a stress rating only and functional operation of the device at these or any other conditions above those indicated in the operational sections of this specification is not implied. Exposure to absolute maximum rating conditions for extended periods may affect device reliability.*

D.C. CHARACTERISTICS (T_A = −55°C to 125°C, V_{CC} = 5V ±10%)[1]

Symbol	Parameter	Limits Min.	Limits Max.	Unit	Test Conditions
V_C	Input Clamp Voltage, All Inputs		-1.2	V	I_C = -5mA
I_F	Input Load Current, $\overline{STSTB}$		500	μA	V_F = 0.4V
	D_2, D_6		750	μA	
	D_0, D_1, D_4, D_5, D_7		250	μA	
	All Other Inputs		250	μA	
I_R	Input Leakage Current DB_0 - D_7		20	μA	V_R = 5.5V
	All Other Inputs		100	μA	
V_{TH}	Input Threshold Voltage, All Inputs	0.8	2.0	V	V_{CC} = 5V
I_{CC}	Power Supply Current		210	mA	
V_{OL}	Output Low Voltage, D_0 - D_7		.5	V	I_{OL} = 2mA
	All Other Outputs		.5	V	I_{OL} = 10mA
V_{OH}	Output High Voltage, D_0 - D_7	3.3		V	I_{OH} = -10μA
	All Other Outputs	2.4		V	I_{OH} = -1mA
I_{OS}	Short Circuit Current, All Outputs	15	90	mA	V_{CC} = 5V
$I_{O\ (Off)}$	Off State Output Current, All Controls Outputs		100	μA	V_O = 5.5V
			-100	μA	V_O = .45V
I_{INT}	$\overline{INTA}$ Current		5	mA	(See Figure)

CAPACITANCE (V_{BIAS} = 2.5V, V_{CC} = 5.0V, T_A = 25°C, f = 1 MHz)

Symbol	Parameter	Limits			Unit
		Min.	Typ.[1]	Max.	
C_{IN}	Input Capacitance		8	12	pF
C_{OUT}	Output Capacitance Control Signals		7	15	pF
I/O	I/O Capacitance (D or DB)		8	15	pF

This parameter is periodically sampled and not 100% tested.

A.C. CHARACTERISTICS (T_A = −55°C to 125°C, V_{CC} = 5V ±10%)

Symbol	Parameter	Limits		Units	Condition
		Min.	Max.		
t_{PW}	Width of Status Strobe	25		ns	
t_{SS}	Setup Time, Status Inputs D_0-D_7	8		ns	
t_{SH}	Hold Time, Status Inputs D_0-D_7	5		ns	
t_{DC}	Delay from $\overline{STSTB}$ to any Control Signal	20	75	ns	C_L = 100pF
t_{RR}	Delay from DBIN to Control Outputs		30	ns	C_L = 100pF
t_{RE}	Delay from DBIN to Enable/Disable 8080 Bus		45	ns	C_L = 25pF
t_{RD}	Delay from System Bus to 8080 Bus during Read		45	ns	C_L = 25pF
t_{WR}	Delay from $\overline{WR}$ to Control Outputs	5	60	ns	C_L = 100pF
t_{WE}	Delay to Enable System Bus DB_0-DB_7 after $\overline{STSTB}$		30	ns	C_L = 100pF
t_{WD}	Delay from 8080 Bus D_0-D_7 to System Bus DB_0-DB_7 during Write	5	40	ns	C_L = 100pF
t_E	Delay from $\overline{System\ Bus\ Enable}$ to System Bus DB_0-DB_7		30	ns	C_L = 100pF
t_{HD}	HLDA to Read Status Outputs		25	ns	C_L = 100pF
t_{DS}	Setup Time, System Bus Inputs to HLDA	10		ns	
t_{DH}	Hold Time, System Bus Inputs to HLDA	20		ns	

NOTES:

1. Typical values are for T_A = 25°C and nominal supply voltages.
2. For D_0-D_7: R_1 = 4KΩ, R_2 = ∞Ω, C_L = 25 pF. For all other outputs: R_1 = 500Ω, R_2 = 1KΩ, C_L = 100 pF.

A.C. TESTING LOAD CIRCUIT

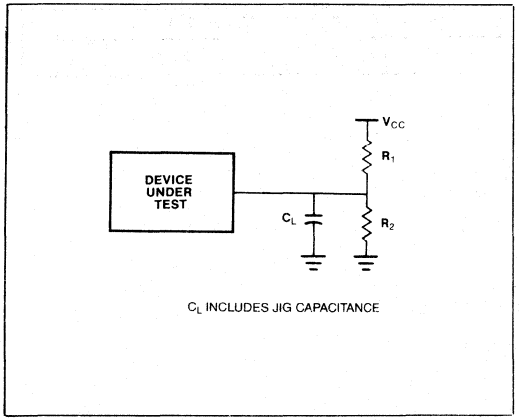

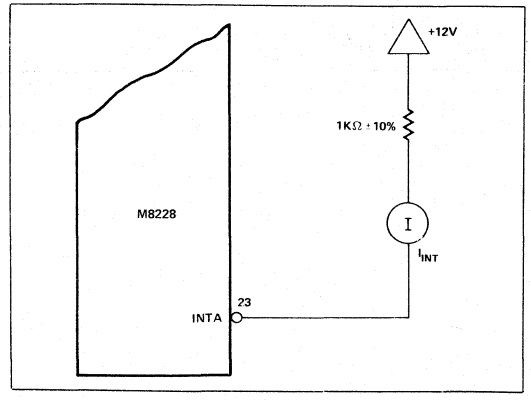

INTA Test Circuit (for RST 7)

WAVEFORMS

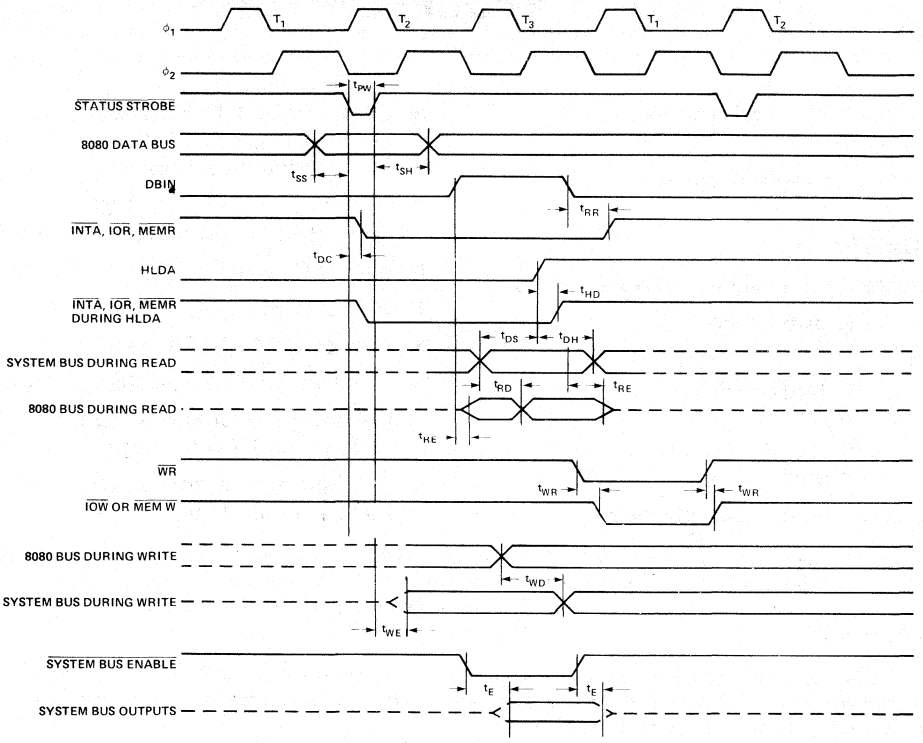

VOLTAGE MEASUREMENT POINTS: D_0-D_7 (when outputs) Logic "0" = 0.8V, Logic "1" = 3.0V. All other signals measured at 1.5V.

PRELIMINARY

M8231A
ARITHMETIC PROCESSING UNIT

Military

- **Fixed Point Single and Double Precision (16/32 Bit)**
- **Floating Point Single Precision (32 Bit)**
- **Binary Data Formats**
- **Add, Subtract, Multiply and Divide**
- **Trigonometric and Inverse Trigonometric Functions**
- **Square Roots, Logarithms, Exponentiation**
- **Float to Fixed and Fixed to Float Conversions**
- **Stack Oriented Operand Storage**
- **Compatible with MCS-80®, MCS-85® and iAPX 86 Microprocessor Families**
- **Direct Memory Access or Programmed I/O Data Transfers**
- **End of Execution Signal**
- **4 MHz Clock Rate**
- **Standard 24 Pin Package**
- **+12 Volt and +5 Volt Power Supplies**
- **Advanced N-Channel Silicon Gate HMOS Technology**
- **Full Military Temperature Range — -55° C to +125° C**

The Intel M8231A Arithmetic Processing Unit (APU) is a monolithic HMOS LSI device that provides high performance fixed and floating point arithmetic and floating point trigonometric operations. It may be used to enhance the mathematical capability of a wide variety of processor-oriented systems. Chebyshev polynomials are used in the implementation of the APU algorithms.

All transfers, including operand, result, status and command information, take place over an 8-bit bidirectional data bus. Operands are pushed onto an internal stack and commands are issued to perform operations on the data in the stack. Results are then available to be retrieved from the stack.

Transfers to and from the APU may be handled by the associated processor using conventional programmed I/O, or may be handled by a direct memory access controller for improved performance. Upon completion of each command, the APU issues an end of execution signal that may be used as an interrupt by the CPU to help coordinate program execution.

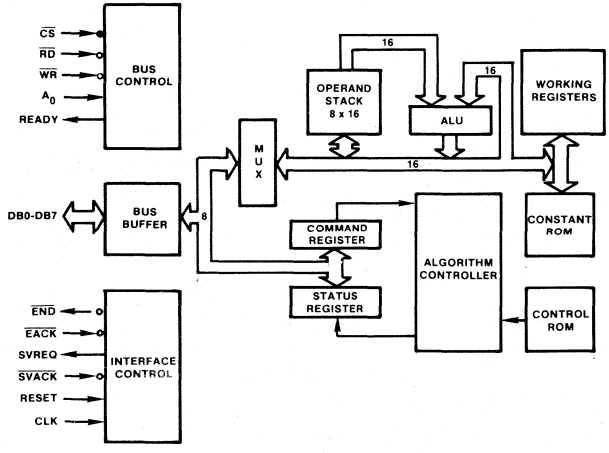

Figure 1. M8231A Block Diagram

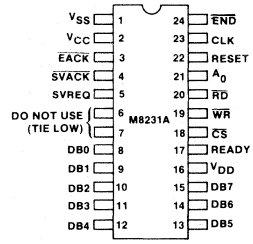

Figure 2. M8231A Pin Configuration

ABSOLUTE MAXIMUM RATINGS*

Storage Temperature . . . . . -65°C to +150°C
Ambient Temperature Under Bias . . . . -55°C to +125°C
V_{DD} with Respect to V_{SS} . . . . . -0.5V to +15.0V
V_{CC} with Respect to V_{SS} . . . . . -0.5V to +7.0V
All Signal Voltages with Respect to V_{SS} . . . . . -0.5V to +7.0V
Power Dissipation 2.0W

**NOTICE: Stresses above those listed under "Absolute Maximum Ratings" may cause permanent damage to the device. This is a stress rating only and functional operation of the device at these or any other conditions above those indicated in the operational sections of this specification is not implied. Exposure to absolute maximum rating conditions for extended periods may effect device reliability.*

D.C. CHARACTERISTICS (T_A = -55°C to +125°C, V_{SS} = 0V, V_{CC} = +5V ± 10%, V_{DD} = +12V ±10%)

Symbol	Parameter	Min	Typ	Max	Units	Test Conditions
V_{OH}	Output HIGH Voltage	3.7			Volts	I_{OH} = -200 μA
V_{OL}	Output LOW Voltage			0.4	Volts	I_{OL} = 3.2 mA
V_{IH}	Input HIGH Voltage	2.0		V_{CC}	Volts	
V_{IL}	Input LOW Voltage	-0.5		0.8	Volts	
I_{IL}	Input Load Current			±10	μA	$V_{SS} \leqslant V_{IN} \leqslant V_{CC}$
I_{OZ}	Data Bus Leakage			±10	μA	V_{SS} +0.4 $\leqslant V_{OUT} \leqslant V_{CC}$
I_{CC}	V_{CC} Supply Current		50	95	mA	
I_{DD}	V_{DD} Supply Current		50	95	mA	
C_O	Output Capacitance		8		pF	
C_I	Input Capacitance		5		pF	fc = 1.0 MHz, Inputs = 0V
C_{IO}	I/O Capacitance		10		pF	

A.C. TESTING INPUT, OUTPUT WAVEFORM

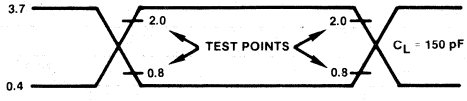

A.C. TESTING: INPUTS ARE DRIVEN AT 3.7V FOR A LOGIC "1" AND 0.4V FOR A LOGIC "0." TIMING MEASUREMENTS ARE MADE AT 2.0V FOR A LOGIC "1" AND 0.8V FOR A LOGIC "0."

A.C. CHARACTERISTICS (T_A = -55°C to +125°C, V_{SS} = 0V, V_{CC} = +5V ± 10%, V_{DD} = +12V ± 10%)

READ OPERATION

Symbol	Parameter		2 MHz Operation M8231A-8 Min	2 MHz Operation M8231A-8 Max	4 MHz Operation M8231A Min	4 MHz Operation M8231A Max	Units
t_{AR}	A_0, $\overline{CS}$ Setup to $\overline{RD}$		0		0		ns
t_{RA}	A_0, $\overline{CS}$ Hold from $\overline{RD}$		0		0		ns
t_{RY}	READY ↓ from $\overline{RD}$ ↓ Delay (Note 2)			150		100	ns
t_{YR}	READY ↑ to $\overline{RD}$ ↑		0		0		ns
t_{RRR}	READY Pulse Width (Note 3)	Data	3.5 t_{CY} +50		3.5 t_{CY} +50		ns
		Status	1.5 t_{CY} +50		1.5 t_{CY} +50		ns
t_{RDE}	Data Bus Enable from $\overline{RD}$ ↓		50		50		ns
t_{DRY}	Data Valid to READY ↑		0		0		ns
t_{DF}	Data Float after $\overline{RD}$ ↑		50	200	50	100	ns

WRITE OPERATION

Symbol	Parameter		2 MHz Operation M8231A-8 Min	2 MHz Operation M8231A-8 Max	4 MHz Operation M8231A Min	4 MHz Operation M8231A Max	Units
t_{AW}	A_0, $\overline{CS}$ Setup to $\overline{WR}$		0		0		ns
t_{WA}	A_0, $\overline{CS}$ Hold after $\overline{WR}$		60		25		ns
t_{WY}	READY ↓ from $\overline{WR}$ ↓ Delay (Note 2)			150		100	ns
t_{YW}	READY ↑ to $\overline{WR}$ ↑		0		0		ns
t_{RRW}	READY Pulse Width (Note 4)			50		50	ns
t_{WI}	Write Inactive Time (Note 4)	Command	4 t_{CY}		4 t_{CY}		ns
		Data	5 t_{CY}		5 t_{CY}		ns
t_{DW}	Data Setup to $\overline{WR}$		150		100		ns
t_{WD}	Data Hold after $\overline{WR}$		20		20		ns

OTHER TIMINGS

Symbol	Parameter	2 MHz Operation M8231A-8 Min	2 MHz Operation M8231A-8 Max	4 MHz Operation M8231A Min	4 MHz Operation M8231A Max	Units
t_{CY}	Clock Period	480	5000	250	2500	ns
t_{CPH}	Clock Pulse High Width	200		100		ns
t_{CPL}	Clock Pulse Low Width	240		120		ns
t_{EE}	$\overline{END}$ Pulse Width (Note 5)	400		200		ns
t_{EAE}	$\overline{EACK}$ ↓ to $\overline{END}$ ↑ Delay		200		150	ns
t_{AA}	$\overline{EACK}$ Pulse Width	100		50		ns
t_{SA}	$\overline{SVACK}$ ↓ to SVREQ ↓ Delay		300		150	ns
t_{SS}	$\overline{SVACK}$ Pulse Width	100		50		ns

NOTES:

1. Typical values are for T_A = 25°C, nominal supply voltages and nominal processing parameters.
2. READY is pulled low for both command and data operations.
3. Minimum values shown assume no previously entered command is being executed for the data access. If a previously entered command is being executed, READY low pulse width is the time to complete execution plus the time shown. Status may be read at any time without exceeding the time shown.
4. READY low pulse width is less than 50 ns when writing into the data port or the control port as long as the duty cycle requirement (t_{WI}) is observed and no previous command is being executed. t_{WI} may be safely violated as long as the extended t_{RRW} that results is observed. If a previously entered command is being executed, READY low pulse width is the time to complete execution plus the time shown. These timings refer specifically to the M8231A.
5. $\overline{END}$ low pulse width is specified for $\overline{EACK}$ tied to VSS. Otherwise t_{EAE} applies.

M8243
MCS-48® INPUT/OUTPUT EXPANDER
MILITARY

- **-55°C to +125°C Military Temp.**
- **Simple Interface to M8748/8048/ 8035L Microcomputers**
- **Four 4-Bit I/O Ports**
- **AND and OR Directly to Ports**
- **24-Pin DIP**
- **Single 5V Supply**
- **High Output Drive**
- **Direct Extension of Resident 8048 I/O Ports**

The Intel M8243 is an input/output expander designed specifically to provide a low cost means of I/O expansion for the MCS-48® family of single chip microcomputers. Fabricated in 5 volts NMOS, the M8243 combines low cost, single supply voltage and high drive current capability.

The M8243 consists of four 4-bit bidirectional static I/O ports and one 4-bit port which serves as an interface to the MCS-48 microcomputers. The 4-bit interface requires that only 4 I/O lines of the M8048 be used for I/O expansion, and also allows multiple M8243's to be added to the same bus.

The I/O ports of the M8243 serve as a direct extension of the resident I/O facilities of the MCS-48 microcomputers and are accessed by their own MOV, ANL, and ORL instructions.

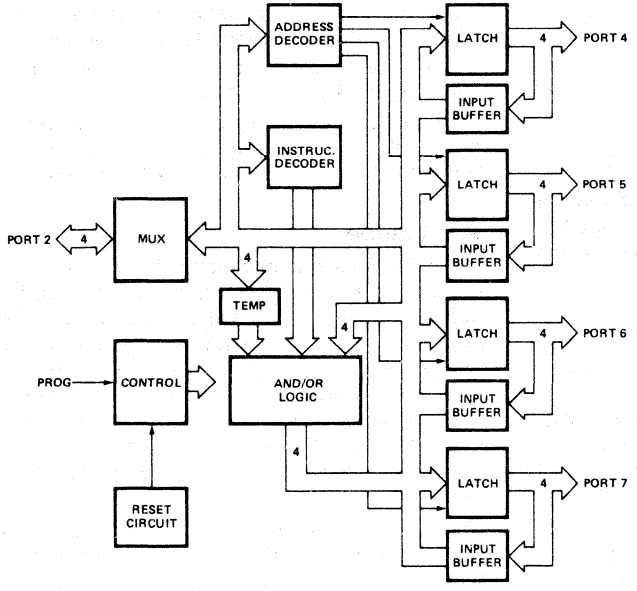

Figure 1. M8243 Block Diagram

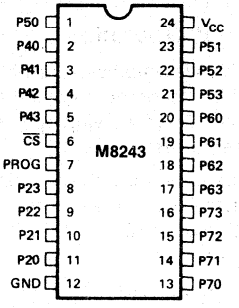

Figure 2. M8243 Pin Configuration

The following are trademarks of Intel Corporation and its affiliates and may be used only to identify Intel products: i, Intel, INTEL, INTELLEC, MCS, Im, iCS, ICE, UPI, BXP, iSBC, iSBX, Insite, iRMX, System 2000, CREDIT, iRMX/80, MULTIBUS, PROMPT, Promware, Megachassis, Library Manager, MAIN MULTIMODULE, and the combination of MCS, ICE, iSBC, iRMX or iCS and a numerical suffix. © INTEL CORPORATION, 1981.

AFN-02003A
AUGUST 1981

Table 1. Pin Description

Symbol	Pin No.	Function
PROG	7	Clock Input. A high to low transition on PROG signifies that address and control are available on P20-P23, and a low to high transition signifies that data is available on P20-P23.
$\overline{CS}$	6	Chip Select Input. A high on CS inhibits any change of output or internal status.
P20-P23	11-8	Four (4) bit bi-directional port contains the address and control bits on a high to low transition of PROG. During a low to high transition contains the data for a selected output port if a write operation, or the data from a selected port before the low to high transition if a read operation.
GND	12	0 volt supply.
P40-P43 P50-P53 P60-P63 P70-P73	2-5 1, 23-21 20-17 13-16	Four (4) bit bi-directional I/O ports. May be programmed to be input (during read), low impedance latched output (after write), or a tri-state (after read). Data on pins P20-P23 may be directly written, ANDed or ORed with previous data.
V_{CC}	24	+5 volt supply.

FUNCTIONAL DESCRIPTION

General Operation

The M8243 contains four 4-bit I/O ports which serve as an extension of the on-chip I/O and are addressed as ports 4-7. The following operations may be performed on these ports:

- Transfer Accumulator to Port
- Transfer Port to Accumulator
- AND Accumulator to Port
- OR Accumulator to Port

All communication between the M8048 and the M8243 occurs over Port 2 (P20-P23) with timing provided by an output pulse on the PROG pin of the processor. Each transfer consists of two 4-bit nibbles:

The first containing the "op code" and port address and the second containing the actual 4-bits of data. A high to low transition of the PROG line indicates that address is present while a low to high transition indicates the presence of data. Additional M8243's may be added to the 4-bit bus and chip selected using additional output lines from the M8048/8748/8035L.

Power On Initialization

Initial application of power to the device forces input/output ports 4, 5, 6, and 7 to the tri-state and port 2 to the input mode. The PROG pin may be either high or low when power is applied. The first high to low transition of PROG causes device to exit power on mode. The power on sequence is initiated if VCC drops below 1V.

P21	P20	Address Code	P23	P22	Instruction Code
0	0	Port 4	0	0	Read
0	1	Port 5	0	1	Write
1	0	Port 6	1	0	ORLD
1	1	Port 7	1	1	ANLD

Write Modes

The device has three write modes. MOVD Pi, A directly writes new data into the selected port and old data is lost. ORLD Pi, A takes new data, OR's it with the old data and then writes it to the port. ANLD Pi, A takes new data, AND's it with the old data and then writes it to the port. Operation code and port address are latched from the input port 2 on the high to low transition of the PROG pin. On the low to high transition of PROG data on port 2 is transferred to the logic block of the specified output port.

After the logic manipulation is performed, the data is latched and outputed. The old data remains latched until new valid outputs are entered.

Read Mode

The device has one read mode. The operation code and port address are latched from the input port 2 on the high to low transition of the PROG pin. As soon as the read operation and port address are decoded, the appropriate outputs are tri-stated, and the input buffers switched on. The read operation is terminated by a low to high transition of the PROG pin. The port (4, 5, 6 or 7) that was selected is switched to the tri-stated mode while port 2 is returned to the input mode.

Normally, a port will be in an output (write mode) or input (read mode). If modes are changed during operation, the first read following a write should be ignored; all following reads are valid. This is to allow the external driver on the port to settle after the first read instruction removes the low impedance drive from the M8243 output. A read of any port will leave that port in a high impedance state.

ABSOLUTE MAXIMUM RATINGS*

Ambient Temperature Under Bias ..... -55°C to 125°C
Storage Temperature ..... -65°C to +150°C
Voltage on Any Pin
With Respect to Ground ..... -0.5V to +7V
Power Dissipation ..... 1 Watt

NOTICE: Stresses above those listed under "Absolute Maximum Ratings" may cause permanent damage to the device. This is a stress rating only and functional operation of device at these or any other conditions above those indicated in the operational sections of this specification is not implied.

D.C. CHARACTERISTICS (T_A = -55°C to 125°C, V_{CC} = 5V± 10%)

Symbol	Parameter	Min	Typ	Max	Units	Test Conditions
V_{IL}	Input Low Voltage	-0.5		0.8	V	
V_{IH}	Input High Voltage	2.0		VCC+0.5	V	
V_{OL1}	Output Low Voltage Ports 4-7			0.45	V	I_{OL} = 4.5 mA*
V_{OL2}	Output Low Voltage Port 7			1	V	I_{OL} = 20 mA
V_{OH1}	Output High Voltage Ports 4-7	2.4			V	I_{OH} = 240μA
I_{IL1}	Input Leakage Ports 4-7	-10		20	μA	V_{in} = VCC to OV
I_{IL2}	Input Leakage Port 2, CS, PROG	-10		10	μA	V_{in} = VCC to OV
V_{OL3}	Output Low Voltage Port 2			45	V	I_{OL} = 0.6 mA
I_{CC}	VCC Supply Current		10	20	mA	
V_{OH2}	Output Voltage Port 2	2.4				I_{OH} = 100μA
I_{OL}	Sum of all I_{OL} from 16 Outputs			72	mA	4.5 mA Each Pin

*See following graph for additional sink current capability

A.C. CHARACTERISTICS (T_A = -55°C to 125°C, V_{CC} = 5V± 10%)

Symbol	Parameter	Min	Max	Units	Test Conditions
tA	Code Valid Before PROG	100		ns	80 pF Load
tB	Code Valid After PROG	60		ns	20 pF Load
tC	Data Valid Before PROG	200		ns	80 pF Load
tD	Data Valid After PROG	20		ns	20 pF Load
tH	Floating After PROG	0	150	ns	20 pF Load
tK	PROG Negative Pulse Width	920		ns	
tCS	CS Valid Before/After PROG	50		ns	
tPO	Ports 4-7 Valid After PROG		700	ns	100 pF Load
tLP1	Ports 4-7 Valid Before/After PROG	120		ns	
tACC	Port 2 Valid After PROG		700	ns	80 pF Load

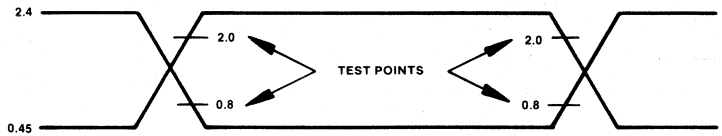

PRELIMINARY

M8251A
PROGRAMMABLE COMMUNICATION INTERFACE

MILITARY

- **Synchronous and Asynchronous Operation**
- **Synchronous 5-8 Bit Characters; Internal or External Character Synchronization; Automatic Sync Insertion**
- **Asynchronous 5-8 Bit Characters; Clock Rate—1, 16 or 64 Times Baud Rate; Break Character Generation; 1, 1½, or 2 Stop Bits; False Start Bit Detection; Automatic Break Detect and Handling**
- **Synchronous Baud Rate — DC to 64K Baud**
- **Military Temperature Range: −55°C to +125°C**
- **Asynchronous Baud Rate — DC to 19.2K Baud**
- **Full Duplex, Double Buffered, Transmitter and Receiver**
- **Error Detection — Parity, Overrun and Framing**
- **Fully Compatible with M8080/M8085 CPU**
- **28-Pin DIP Package**
- **All Inputs and Outputs are TTL Compatible**
- **Single +5V Supply**
- **Single TTL Clock**

The Intel® M8251A is the enhanced version of the industry standard, Intel® 8251 Universal Synchronous/Asynchronous Receiver/Transmitter (USART), designed for data communications with Intel's new high performance family of microprocessors such as the M8085. The M8251A is used as a peripheral device and is programmed by the CPU to operate using virtually any serial data transmission technique presently in use (including IBM "bi-sync"). The USART accepts data characters from the CPU in parallel format and then converts them into a continuous serial data stream for transmission. Simultaneously, it can receive serial data streams and convert them into parallel data characters for the CPU. The USART will signal the CPU whenever it can accept a new character for transmission or whenever it has received a character for the CPU. The CPU can read the complete status of the USART at any time. These include data transmission errors and control signals such as SYNDET, TxEMPTY. The chip is constructed using N-channel silicon gate technology.

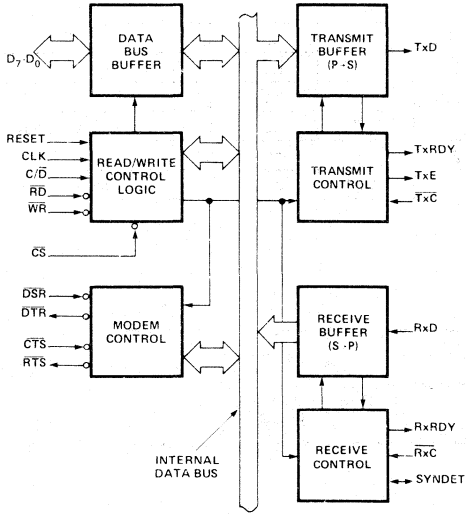

Figure 1. Block Diagram

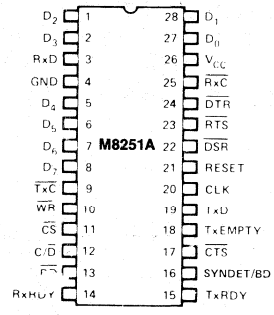

Figure 2. Pin Configuration

ABSOLUTE MAXIMUM RATINGS*

Ambient Temperature Under Bias. . . . . −55°C to +125°C
Storage Temperature . . . . . −65°C to +150°C
Voltage On Any Pin
With Respect to Ground . . . . . −0.5V to +7V
Power Dissipation . . . . . 1 Watt

NOTICE: Stresses above those listed under "Absolute Maximum Ratings" may cause permanent damage to the device. This is a stress rating only and functional operation of the device at these or any other conditions above those indicated in the operational sections of this specification is not implied. Exposure to absolute maximum rating conditions for extended periods may affect device reliability.

D.C. CHARACTERISTICS (T_A = −55°C to 125°C, V_{CC} = 5.0V ±5%, GND = 0V)

Symbol	Parameter	Min.	Max.	Unit	Test Conditions
V_{IL}	Input Low Voltage	−0.5	0.8	V	
V_{IH}	Input High Voltage	2.2	V_{CC}	V	
V_{OL}	Output Low Voltage		0.45	V	I_{OL} = 2.2 mA
V_{OH}	Output High Voltage	2.4		V	I_{OH} = −400 μA
I_{OFL}	Output Float Leakage		±10	μA	V_{OUT} = V_{CC} TO 0.45V
I_{IL}	Input Leakage		±10	μA	V_{IN} = V_{CC} TO 0.45V
I_{CC}	Power Supply Current		150	mA	All Outputs = High

CAPACITANCE (T_A = 25°C, V_{CC} = GND = 0V)

Symbol	Parameter	Min.	Max.	Unit	Test Conditions
C_{IN}	Input Capacitance		10	pF	fc = 1MHz
$C_{I/O}$	I/O Capacitance		20	pF	Unmeasured pins returned to GND

A.C. CHARACTERISTICS (T_A = −55°C to 125°C, V_{CC} = 5.0V ±5%, GND = 0V)

Bus Parameters[1]

READ CYCLE

Symbol	Parameter	Min.	Max.	Unit	Test Conditions
t_{AR}	Address Stable Before $\overline{READ}$ ($\overline{CS}$, C/$\overline{D}$)	−75		ns	Note 2
t_{RA}	Address Hold Time for $\overline{READ}$ ($\overline{CS}$, C/$\overline{D}$)	75		ns	Note 2
t_{RR}	$\overline{READ}$ Pulse Width	300		ns	
t_{RD}	Data Delay from $\overline{READ}$		280	ns	3, C_L = 150 pF
t_{DF}	$\overline{READ}$ to Data Floating	5	120	ns	

A.C. CHARACTERISTICS (Continued)

WRITE CYCLE

Symbol	Parameter	Min.	Max.	Unit	Test Conditions
t_{AW}	Address Stable Before $\overline{WRITE}$	75		ns	
t_{WA}	Address Hold Time for $\overline{WRITE}$	75		ns	
t_{WW}	$\overline{WRITE}$ Pulse Width	300		ns	
t_{DW}	Data Set Up Time for $\overline{WRITE}$	200		ns	
t_{WD}	Data Hold Time for $\overline{WRITE}$	80		ns	
t_{RV}	Recovery Time Between WRITES	6		t_{CY}	Note 4

OTHER TIMINGS

Symbol	Parameter	Min.	Max.	Unit	Test Conditions
t_{CY}	Clock Period	320	1350	ns	Notes 5, 6
t_{ϕ}	Clock High Pulse Width	150	$t_{CY}-100$	ns	
$t_{\overline{\phi}}$	Clock Low Pulse Width	100		ns	
t_R, t_F	Clock Rise and Fall Time		20	ns	
t_{DTx}	TxD Delay from Falling Edge of $\overline{TxC}$		1	μs	
f_{Tx}	Transmitter Input Clock Frequency				
	1x Baud Rate	DC	64	kHz	
	16x Baud Rate	DC	310	kHz	
	64x Baud Rate	DC	615	kHz	
t_{TPW}	Transmitter Input Clock Pulse Width				
	1x Baud Rate	12		t_{CY}	
	16x and 64x Baud Rate	1		t_{CY}	
t_{TPD}	Transmitter Input Clock Pulse Delay				
	1x Baud Rate	15		t_{CY}	
	16x and 64x Baud Rate	3		t_{CY}	
f_{Rx}	Receiver Input Clock Frequency				
	1x Baud Rate	DC	64	kHz	
	16x Baud Rate	DC	310	kHz	
	64x Baud Rate	DC	615	kHz	
t_{RPW}	Receiver Input Clock Pulse Width				
	1x Baud Rate	12		t_{CY}	
	16x and 64x Baud Rate	1		t_{CY}	
t_{RPD}	Receiver Input Clock Pulse Delay				
	1x Baud Rate	15		t_{CY}	
	16x and 64x Baud Rate	3		t_{CY}	
t_{TxRDY}	TxRDY Pin Delay from Center of last Bit		8	t_{CY}	Note 7
$t_{TxRDY\ CLEAR}$	TxRDY ↓ from Leading Edge of $\overline{WR}$		6	t_{CY}	Note 7
t_{RxRDY}	RxRDY Pin Delay from Center of last Bit		24	t_{CY}	Note 7
$t_{RxRDY\ CLEAR}$	RxRDY ↓ from Leading Edge of $\overline{RD}$		6	t_{CY}	Note 7
t_{IS}	Internal SYNDET Delay from Rising Edge of $\overline{RxC}$		24	t_{CY}	Note 7
t_{ES}	External SYNDET Set-Up Time Before Falling Edge of $\overline{RxC}$	16		t_{CY}	Note 7

A.C. CHARACTERISTICS (Continued)

Symbol	Parameter	Min.	Max.	Unit	Test Conditions
$t_{TxEMPTY}$	TxEMPTY Delay from Center of Last Bit	20		t_{CY}	Note 7
t_{WC}	Control Delay from Rising Edge of WRITE (TxEn, $\overline{DTR}$, $\overline{RTS}$)	8		t_{CY}	Note 7
t_{CR}	Control to READ Set-Up Time ($\overline{DSR}$, $\overline{CTS}$)	20		t_{CY}	Note 7

NOTES:

1. AC timings measured V_{OH} = 2.0, V_{OL} = 0.8, and with load circuit of Figure 1.
2. Chip Select ($\overline{CS}$) and Command/Data (C/$\overline{D}$) are considered as Addresses.
3. Assumes that Address is valid before $\overline{RD}\downarrow$.
4. This recovery time is for Mode Initialization only. Write Data is allowed only when TxRDY = 1.
   Recovery Time between Writes for Asynchronous Mode is 8 t_{CY} and for Synchronous Mode is 16 t_{CY}.
5. The TxC and RxC frequencies have the following limitations with respect to CLK.
   For 1x Baud Rate, f_{Tx} or $f_{Rx} \leq 1/(30\ t_{CY})$
   For 16x and 64x Baud Rate, f_{Tx} or $f_{Rx} \leq 1/(4.5\ t_{CY})$
6. Reset Pulse Width = 6 t_{CY} minimum; System Clock must be running during Reset.
7. Status update can have a maximum delay of 28 clock periods from the event affecting the status.

TYPICAL Δ OUTPUT DELAY VERSUS Δ CAPACITANCE (pF)

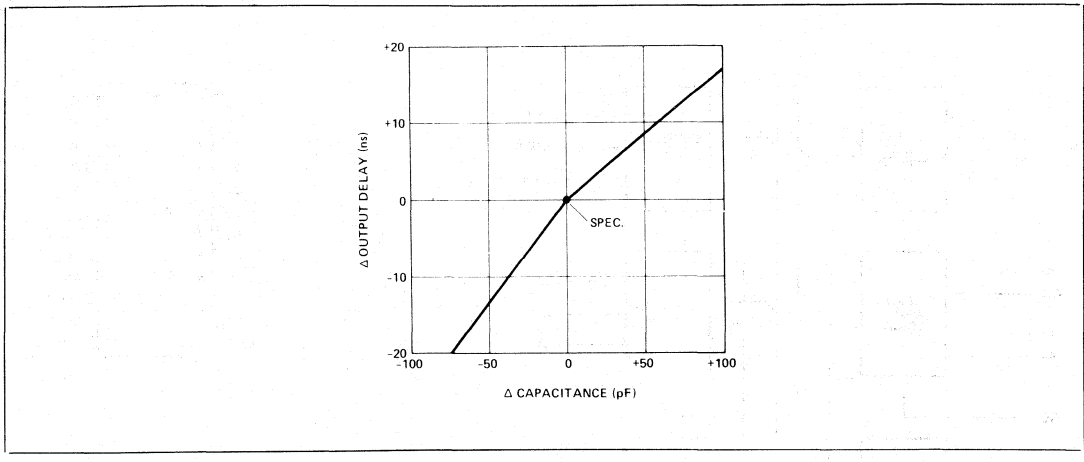

A.C. TESTING INPUT, OUTPUT WAVEFORM

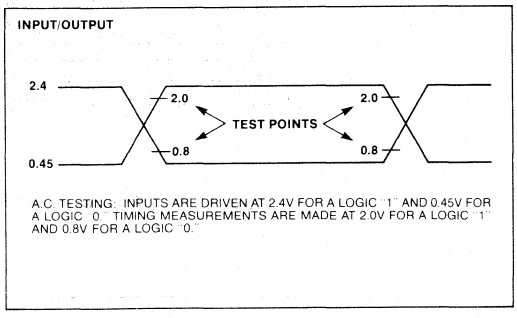

A.C. TESTING LOAD CIRCUIT

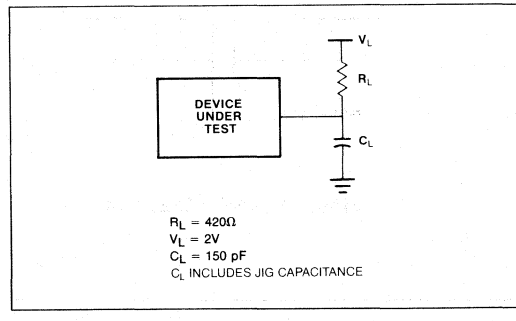

M8253
PROGRAMMABLE INTERVAL TIMER

MILITARY

- **3 Independent 16-Bit Counters**
- **Count Binary or BCD**
- **Military Temperature Range: −55°C to +125°C**
- **Single +5V Supply**
- **Programmable Counter Modes**
- **24-Pin Dual In-Line Package**

The Intel® M8253 is a programmable counter/timer chip designed for use as an Intel microcomputer peripheral. It uses nMOS technology with a single +5V supply and is packaged in a 24-pin DIP.

It is organized as 3 independent 16-bit counters, each with a count rate of up to 2 MHz. All modes of operation are software programmable.

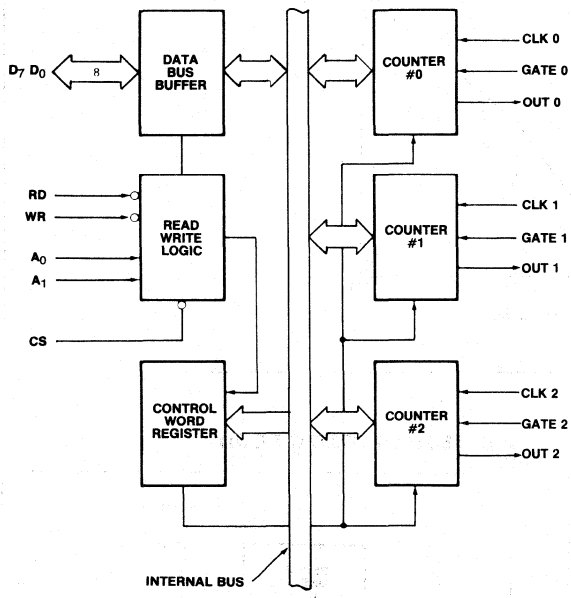

Figure 1. Block Diagram

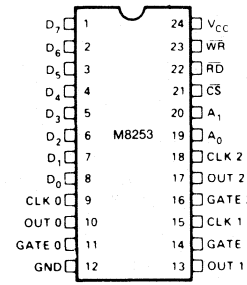

$D_7\ D_0$	DATA BUS (8 BIT)
CLK N	COUNTER CLOCK INPUTS
GATE N	COUNTER GATE INPUTS
OUT N	COUNTER OUTPUTS
$\overline{RD}$	READ COUNTER
WR	WRITE COMMAND OR DATA
CS	CHIP SELECT
$A_0\ A_1$	COUNTER SELECT
V_{CC}	+5 VOLTS
GND	GROUND

Figure 2. Pin Configuration

ABSOLUTE MAXIMUM RATINGS*

Ambient Temperature Under Bias	-55°C to +85°C
Storage Temperature	-65°C to +150°C
Voltage On Any Pin With Respect to Ground	-0.5 V to +7 V
Power Dissipation	1 Watt

**NOTICE: Stresses above those listed under "Absolute Maximum Ratings" may cause permanent damage to the device. This is a stress rating only and functional operation of the device at these or any other conditions above those indicated in the operational sections of this specification is not implied. Exposure to absolute maximum rating conditions for extended periods may affect device reliability.*

D.C. CHARACTERISTICS (T_A = −55°C to 125°C, V_{CC} = 5.0V ±10%)

Symbol	Parameter	Min.	Max.	Unit	Test Conditions
V_{IL}	Input Low Voltage	-0.5	0.8	V	
V_{IH}	Input High Voltage	2.4		V	
V_{OL}	Output Low Voltage		0.45	V	I_{OL} = 1.6 mA
V_{OH}	Output High Voltage	2.4		V	I_{OH} = −150 μA
I_{IL}	Input Load Current		±20	μA	V_{IN} = V_{CC} to 0V
I_{OFL}	Output Float Leakage		±20	μA	V_{OUT} = V_{CC} to 0V
I_{CC}	V_{CC} Supply Current		160	mA	

CAPACITANCE (T_A = 25°C, V_{CC} = GND = 0V)

Symbol	Parameter	Min.	Typ.	Max.	Unit	Test Conditions
C_{IN}	Input Capacitance			10	pF	fc = 1 MHz
$C_{I/O}$	I/O Capacitance			20	pF	Unmeasured pins returned to V_{SS}

A.C. CHARACTERISTICS (T_A = −55°C to 125°C, V_{CC} = +5V ±10%, GND = 0V)

Bus Parameters[1]

READ CYCLE

Symbol	Parameter	M8253		Unit
		Min.	Max.	
t_{AR}	Address Stable Before $\overline{READ}$	50		ns
t_{RA}	Address Hold Time for $\overline{READ}$	10		ns
t_{RR}	$\overline{READ}$ Pulse Width	400		ns
t_{RD}	DATA Delay from $\overline{READ}$[2]		300	ns
t_{DF}	$\overline{READ}$ to Data Floating	25	175	ns
t_{RV}	Recovery Time Between $\overline{READ}$ and Any Other Control Signal	1		μs

A.C. CHARACTERISTICS (Continued)

WRITE CYCLE

Symbol	Parameter	M8253		Unit
		Min.	Max.	
t_{AW}	Address Stable Before $\overline{WRITE}$	50		ns
t_{WA}	Address Hold Time for $\overline{WRITE}$	30		ns
t_{WW}	$\overline{WRITE}$ Pulse Width	400		ns
t_{DW}	Data Set Up Time for $\overline{WRITE}$	300		ns
t_{WD}	Data Hold Time for $\overline{WRITE}$	40		ns
t_{RV}	Recovery Time Between $\overline{WRITE}$ and Any Other Control Signal	1		μs

NOTES:
1. AC timings measured at V_{OH} = 2.2, V_{OL} = 0.8.

CLOCK AND GATE TIMING

Symbol	Parameter	M8253		Unit
		Min.	Max.	
t_{CLK}	Clock Period	400	dc	ns
t_{PWH}	High Pulse Width	250		ns
t_{PWL}	Low Pulse Width	150		ns
t_{GW}	Gate Width High	150		ns
t_{GL}	Gate Width Low	100		ns
t_{GS}	Gate Set Up Time to CLK↑	100		ns
t_{GH}	Gate Hold Time After CLK↑	100		ns
t_{OD}	Output Delay From CLK↓[1]		400	ns
t_{ODG}	Output Delay From Gate↓[1]		300	ns

NOTE 1:
Test Conditions: C_L = 100pF.

A.C. TESTING INPUT, OUTPUT WAVEFORM

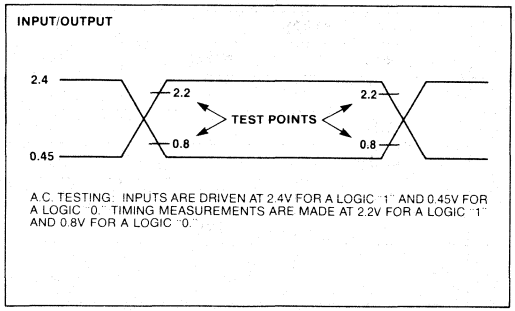

A.C. TESTING LOAD CIRCUIT

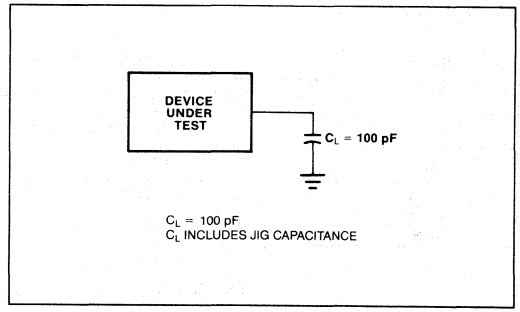

WAVEFORMS

WRITE

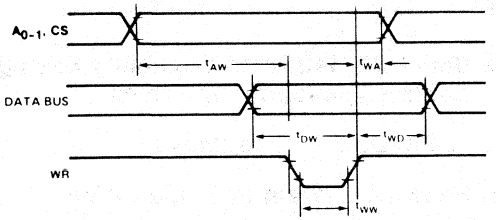

READ

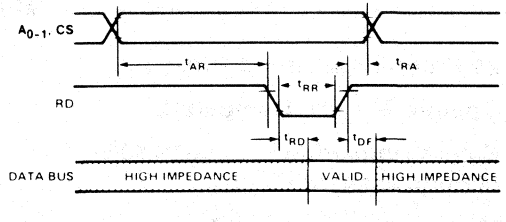

CLOCK AND GATE

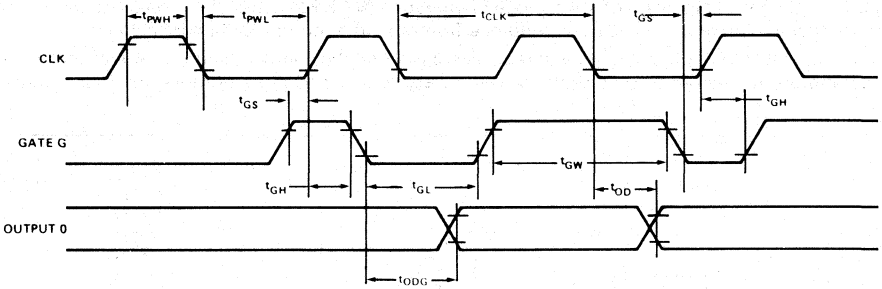

M8255A
PROGRAMMABLE PERIPHERAL INTERFACE

MILITARY

- **24 Programmable I/O Pins**
- **Completely TTL Compatible**
- **Fully Compatible with MCS-80® Microprocessor Family**
- **Military Temperature Range: −55°C to +125°C**
- **Direct Bit Set/Reset Capability Easing Control Application Interface**
- **40-Pin Dual In-Line Package**
- **Reduces System Package Count**
- **±10% Power Supply Tolerance**

The Intel® M8255A is a general purpose programmable I/O device designed for use with microprocessors. It has 24 I/O pins which may be individually programmed in 2 groups of 12 and used in 3 major modes of operation. In the first mode (MODE 0), each group of 12 I/O pins may be programmed in sets of 4 to be input or output. In MODE 1, the second mode, each group may be programmed to have 8 lines of input or output. Of the remaining 4 pins, 3 are used for handshaking and interrupt control signals. The third mode of operation (MODE 2) is a bidirectional bus mode which uses 8 lines for a bidirectional bus, and 5 lines, borrowing one from the other group, for handshaking.

Other features of the M8255A include bit set and reset capability and the ability to source 1 mA of current at 1.5 volts. This allows darlington transistors to be directly driven for applications such as printers and high voltage displays.

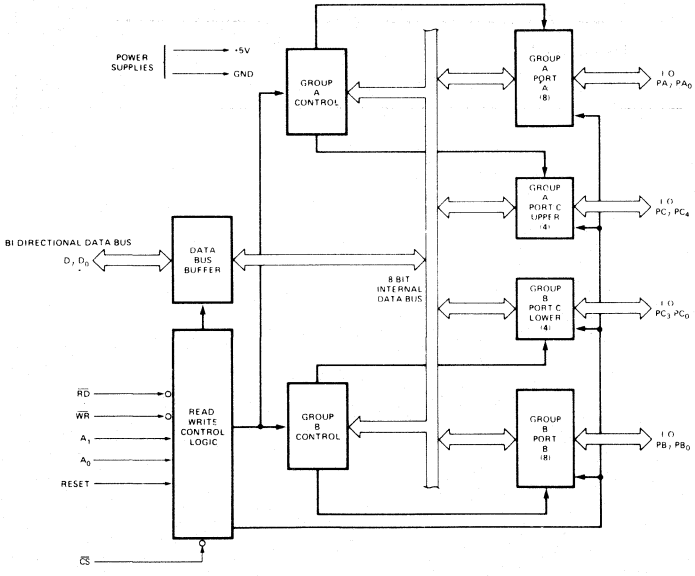

Figure 1. Block Diagram

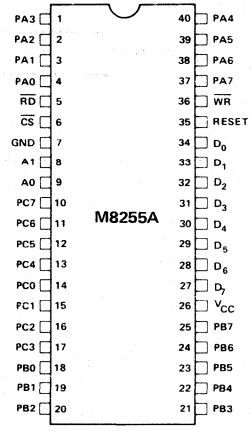

D_7–D_0	DATA BUS (BI-DIRECTIONAL)
RESET	RESET INPUT
$\overline{CS}$	CHIP SELECT
$\overline{RD}$	READ INPUT
$\overline{WR}$	WRITE INPUT
A0, A1	PORT ADDRESS
PA7-PA0	PORT A (BIT)
PB7-PB0	PORT B (BIT)
PC7-PC0	PORT C (BIT)
V_{CC}	+5 VOLTS
GND	Ø VOLTS

Figure 2. Pin Configuration

ABSOLUTE MAXIMUM RATINGS*

Ambient Temperature Under Bias . . . . . -55°C to +125°C
Storage Temperature . . . . . -65°C to +150°C
Voltage On Any Pin
With Respect to GND . . . . . -0.5V to +7V
Power Dissipation . . . . . 1 Watt

NOTICE: Stresses above those listed under "Absolute Maximum Ratings" may cause permanent damage to the device. This is a stress rating only and functional operation of the device at these or any other conditions above those indicated in the operational sections of this specification is not implied. Exposure to absolute maximum rating conditions for extended periods may affect device reliability.

D.C. CHARACTERISTICS (T_A = −55°C to 125°C, V_{CC} = +5V ±10%, GND = 0V)

Symbol	Parameter	Min.	Max.	Unit	Test Conditions
V_{IL}	Input Low Voltage	-0.5	0.8	V	
V_{IH}	Input High Voltage	2.2	V_{CC}	V	
V_{OL} (DB)	Output Low Voltage (Data Bus)		0.45	V	I_{OL} = 2.5mA
V_{OL}(PER)	Output Low Voltage (Peripheral Port)		0.45	V	I_{OL} = 1.7mA
V_{OH}(DB)	Output High Voltage (Data Bus)	2.4		V	I_{OH} = -400μA
V_{OH}(PER)	Output High Voltage (Peripheral Port)	2.4		V	I_{OH} = -200μA
I_{DAR}[1]	Darlington Drive Current	-1.0	-4.0	mA	
I_{CC}	Power Supply Current		120	mA	
I_{IL}	Input Load Current		±10	μA	V_{IN} = V_{CC} to 0V
I_{OFL}	Output Float Leakage		±10	μA	V_{OUT} = V_{CC} to 0V

NOTE 1: Available on any 8 pins from Port B and C.

A.C. CHARACTERISTICS (T_A = −55°C to +125°C, V_{CC} = 5.0V ±10%, GND = 0V)

Symbol	Parameter	8255A		Unit
		Min.	Max.	
t_{AR}	Address Stable Before READ	0		ns
t_{RA}	Address Stable After READ	0		ns
t_{RR}	READ Pulse Width	300		ns
t_{RD}	Data Valid From READ[1]		250	ns
t_{DF}	Data Float After READ	10	150	ns
t_{RV}	Time Between READs and/or WRITEs	850		ns
t_{AW}	Address Stable Before WRITE	0		ns
t_{WA}	Address Stable After WRITE	20		ns
t_{WW}	WRITE Pulse Width	400		ns
t_{DW}	Data Valid to WRITE (T.E.)	100		ns
t_{WD}	Data Valid After WRITE	30		ns
t_{WB}	WR = 1 to Output[1]		350	ns
t_{IR}	Peripheral Data Before RD	0		ns
t_{HR}	Peripheral Data After RD	0		ns
t_{AK}	ACK Pulse Width	300		ns
t_{ST}	STB Pulse Width	500		ns
t_{PS}	Per. Data Before T.E. of STB	0		ns

A.C. CHARACTERISTICS (Continued)

Symbol	Parameter	8255A		Unit
		Min.	Max.	
t_{PH}	Per. Data After T.E. of STB	180		ns
t_{AD}	ACK = 0 to Output[1]		300	ns
t_{KD}	ACK = 1 to Output Float	20	250	ns
t_{WOB}	WR = 1 to OBF = 0[1]		650	ns
t_{AOB}	ACK = 0 to OBF = 1[1]		350	ns
t_{SIB}	STB = 0 to IBF = 1[1]		300	ns
t_{RIB}	RD = 1 to IBF = 0[1]		300	ns
t_{RIT}	RD = 0 to INTR = 0[1]		400	ns
t_{SIT}	STB = 1 to INTR = 1[1]		300	ns
t_{AIT}	ACK = 1 to INTR = 1[1]		350	ns
t_{WIT}	WR = 0 to INTR = 0[1]		850	ns

NOTES:
1. Test condition: 8255A: C_L = 100pF
2. Period of Reset pulse must be at least 50μF during or after power on. Subsequent Reset pulse can be 500ns min.

CAPACITANCE (T_A = 25°C, V_{CC} = GND = 0V)

Symbol	Parameter	Min.	Typ.	Max.	Unit	Test Conditions
C_{IN}	Input Capacitance			10	pF	fc = 1MHz
$C_{I/O}$	I/O Capacitance			20	pF	Unmeasured pins returned to GND

A.C. TESTING INPUT, OUTPUT WAVEFORM

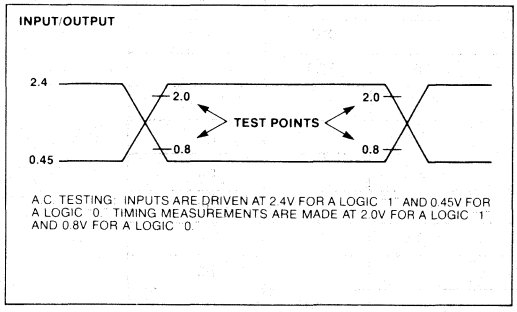

A.C. TESTING: INPUTS ARE DRIVEN AT 2.4V FOR A LOGIC "1" AND 0.45V FOR A LOGIC "0". TIMING MEASUREMENTS ARE MADE AT 2.0V FOR A LOGIC "1" AND 0.8V FOR A LOGIC "0".

A.C. TESTING LOAD CIRCUIT

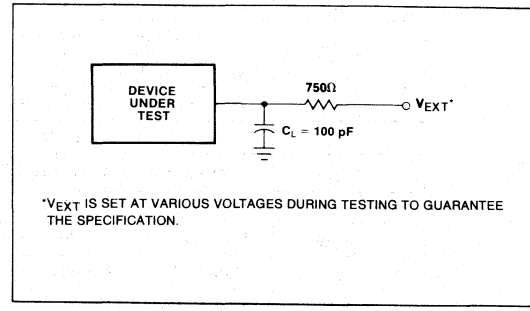

*V_{EXT} IS SET AT VARIOUS VOLTAGES DURING TESTING TO GUARANTEE THE SPECIFICATION.

WAVEFORMS

MODE 0 (INPUT)

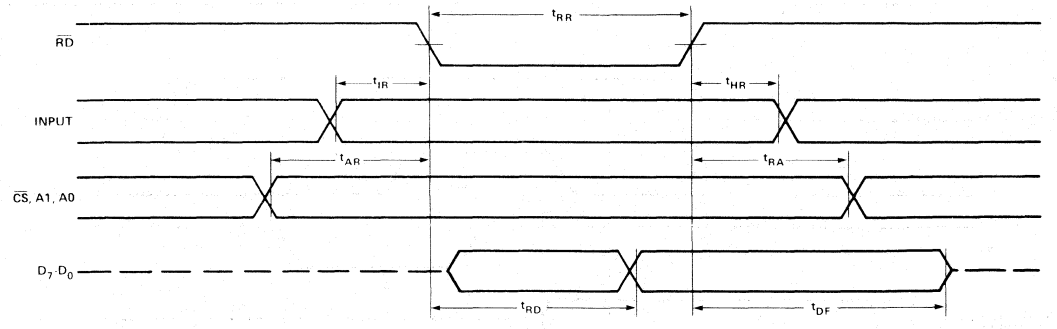

MODE 0 (OUTPUT)

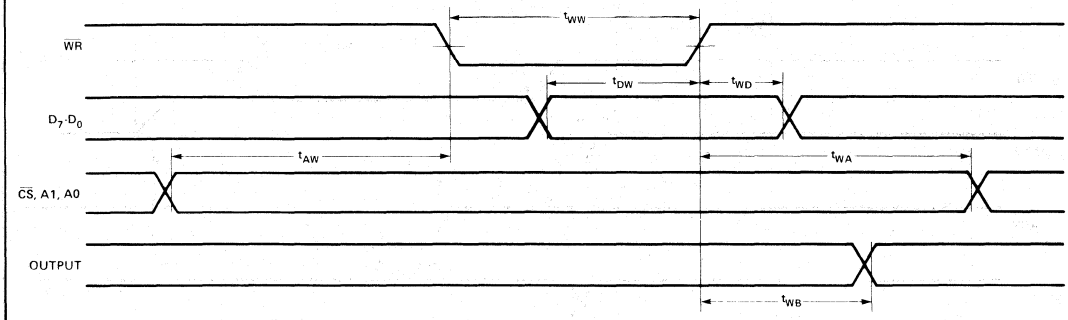

WAVEFORMS (Continued)

MODE 1 (STROBED INPUT)

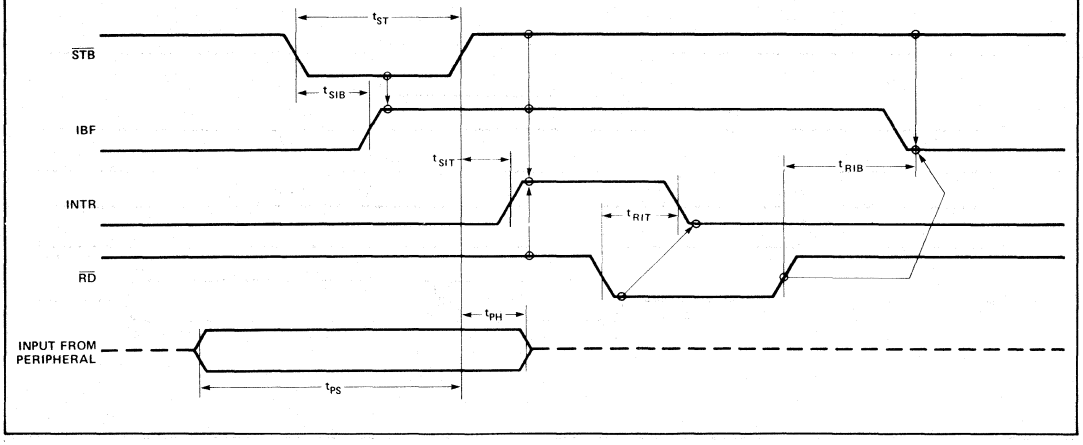

MODE 1 (STROBED OUTPUT)

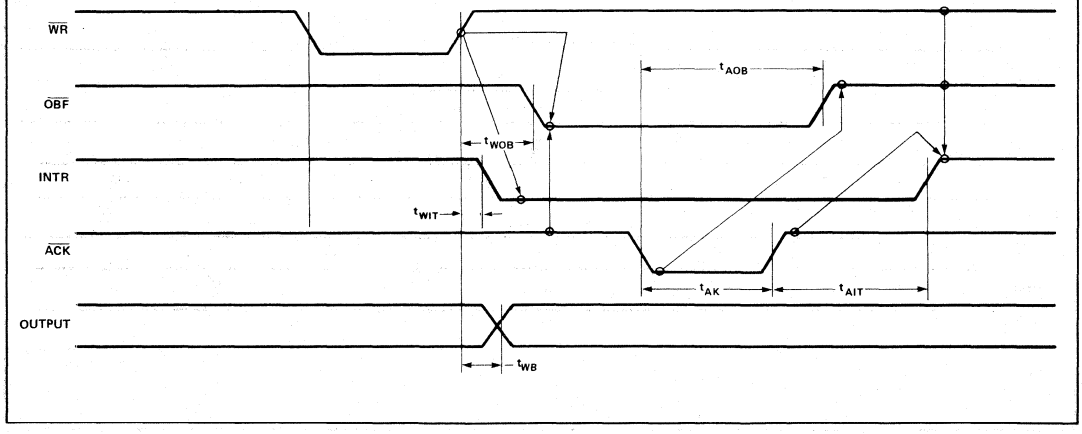

WAVEFORMS (Continued)

MODE 2 (BIDIRECTIONAL)

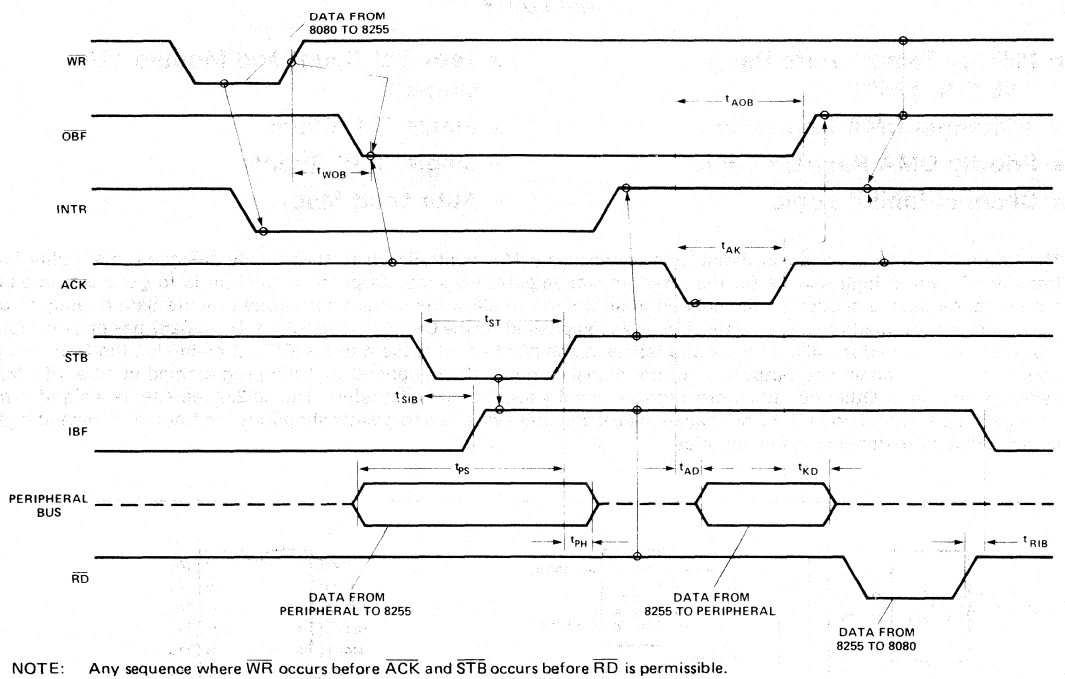

NOTE: Any sequence where $\overline{WR}$ occurs before $\overline{ACK}$ and $\overline{STB}$ occurs before $\overline{RD}$ is permissible.
($INTR = IBF \cdot \overline{MASK} \cdot \overline{STB} \cdot \overline{RD} + \overline{OBF} \cdot \overline{MASK} \cdot \overline{ACK} \cdot \overline{WR}$)

WRITE

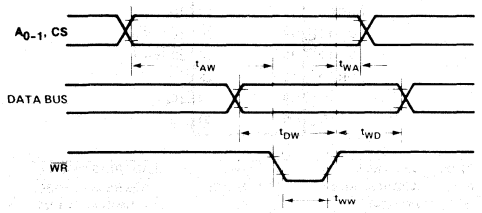

READ

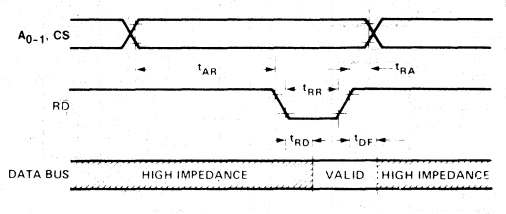

PRELIMINARY

M8257
PROGRAMMABLE DMA CONTROLLER

MILITARY

- **Military Temperature Range: −55°C to 125°C**
- **4-Channel DMA Controller**
- **Priority DMA Request Logic**
- **Channel Inhibit Logic**
- **Terminal Count and Modulo 128 Outputs**
- **Single TTL Clock**
- **Single +5V Supply**
- **Auto Load Mode**

The Intel® M8257 is a 4-channel direct memory access (DMA) controller. It is specifically designed to simplify the transfer of data at high speeds for the Intel® microcomputer systems. Its primary function is to generate, upon a peripheral request, a sequential memory address which will allow the peripheral to read or write data directly to or from memory. Acquisition of the system bus in accomplished via the CPU's hold function. The M8257 has priority logic that resolves the peripherals requests and issues a composite hold request to the CPU. It maintains the DMA cycle count for each channel and outputs a control signal to notify the peripheral that the programmed number of DMA cycles is complete. Other output control signals simplify sectored data transfers. The M8257 represents a significant savings in component count for DMA-based microcomputer systems and greatly simplifies the transfer of data at high speed between peripherals and memories.

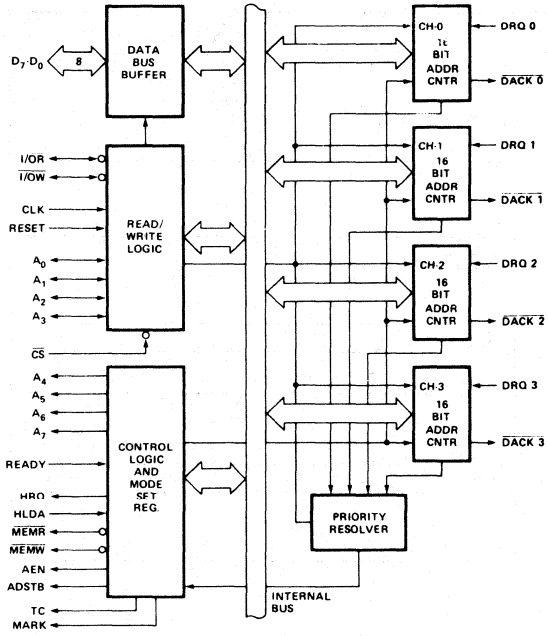

Figure 1. Block Diagram

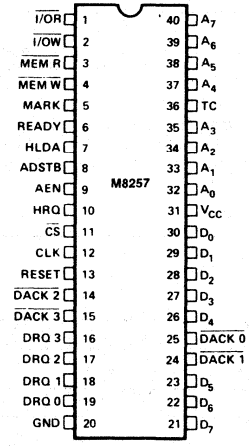

D_7-D_0	DATA BUS
A_7-A_0	ADDRESS BUS
$\overline{I/OR}$	I/O READ
$\overline{I/OW}$	I/O WRITE
$\overline{MEMR}$	MEMORY READ
$\overline{MEMW}$	MEMORY WRITE
CLK	CLOCK INPUT
RESET	RESET INPUT
READY	READY
HRQ	HOLD REQUEST (TO 8080A)
HLDA	HOLD ACKNOWLEDGE (FROM 8080A)

AEN	ADDRESS ENABLE
ADSTB	ADDRESS STROBE
TC	TERMINAL COUNT
MARK	MODULO 128 MARK
DRQ_3-DRQ_0	DMA REQUEST INPUT
$\overline{DACK_3}$-$\overline{DACK_0}$	DMA ACKNOWLEDGE OUT
$\overline{CS}$	CHIP SELECT
V_{CC}	+5 VOLTS
GND	GROUND

Figure 2. Pin Configuration

ABSOLUTE MAXIMUM RATINGS*

Ambient Temperature Under Bias . . . . . – 55°C to 125°C
Storage Temperature . . . . . – 65°C to + 150°C
Voltage on Any Pin
With Respect to Ground . . . . . –0.5V to +7V
Power Dissipation . . . . . 1 Watt

NOTICE: Stresses above those listed under "Absolute Maximum Ratings" may cause permanent damage to the device. This is a stress rating only and functional operation of the device at these or any other conditions above those indicated in the operational sections of this specification is not implied. Exposure to absolute maximum rating conditions for extended periods may affect device reliability.

D.C. CHARACTERISTICS (T_A = −55°C to 125°C, V_{CC} = +5V ±10%, GND = 0V)

Symbol	Parameter	Min.	Max.	Unit	Test Conditions
V_{IL}	Input Low Voltage	-0.5	0.8	Volts	
V_{IH}	Input High Voltage	2.2	V_{CC}+.5	Volts	
V_{OL}	Output Low Voltage		0.45	Volts	I_{OL} = 1.6 mA
V_{OH}	Output High Voltage	2.4	V_{CC}	Volts	I_{OH}=-150μA for AB, DB and AEN I_{OH}=-80μA for others
V_{HH}	HRQ Output High Voltage	3.3	V_{CC}	Volts	I_{OH} = -80μA
I_{CC}	V_{CC} Current Drain		150	mA	
I_{IL}	Input Leakage		±10	μA	$V_{SS} \leq V_{IN} \leq V_{CC}$
I_{OFL}	Output Leakage During Float		±10	μA	V_{SS} + 0.45 $\leq V_{OUT} \leq V_{CC}$

CAPACITANCE (T_A = 25°C, V_{CC} = GND = 0V)

Symbol	Parameter	Min.	Typ.	Max.	Unit	Test Conditions
C_{IN}	Input Capacitance			10	pF	fc = 1MHz
$C_{I/O}$	I/O Capacitance			20	pF	Unmeasured pins returned to GND

A.C. CHARACTERISTICS—DMA (MASTER) MODE (T_A = −55°C to 125°C, V_{CC} = +5V ±10%, GND = 0V)

TIMING REQUIREMENTS

Symbol	Parameter	Min.	Max.	Unit
T_{CY}	Cycle Time (Period)	0.320	4	μs
T_θ	Clock Active (High)	120	.8T_{CY}	ns
T_{QS}	DRQ↑ Setup to θ↓ (SI, S4)	120		ns
T_{QH}	DRQ↓ Hold from HLDA↑[4]	0		ns
T_{HS}	HLDA↑ or ↓Setup to θ↓ (SI, S4)	100		ns
T_{RS}	READY Setup Time to θ↑ (S3, Sw)	30		ns
T_{RH}	READY Hold Time from θ↑ (S3, Sw)	20		ns

A.C. CHARACTERISTICS—DMA (MASTER) MODE (T_A = −55°C to 125°C, V_{CC} = +5V ±10%, GND = 0V)

TIMING RESPONSES

Symbol	Parameter	Min.	Max.	Unit
T_{DQ}	HRQ↑ or ↓Delay from θ↑(SI,S4) (measured at 2.0V)[1]		180	ns
T_{DQ1}	HRQ↑ or ↓Delay from θ↑(SI,S4) (measured at 3.3V)[3]		270	ns
T_{AEL}	AEN↑ Delay from θ↓(S1)[1]		300	ns
T_{AET}	AEN↓ Delay from θ↑(SI)[1]		200	ns
T_{AEA}	Adr(AB)(Active) Delay from AEN↑(S1)[4]	20		ns
T_{FAAB}	Adr(AB)(Active) Delay from θ↑(S1)[2]		270	ns
T_{AFAB}	Adr(AB)(Float) Delay from θ↑(SI)[2]		200	ns
T_{ASM}	Adr(AB)(Stable) Delay from θ↑(S1)[2]		250	ns
T_{AH}	Adr(AB)(Stable) Hold from θ↑(S1)[2]	T_{ASM} − 50		ns
T_{AHR}	Adr(AB)(Valid) Hold from $\overline{Rd}$↑(S1, SI)[4]	60		ns
T_{AHW}	Adr(AB)(Valid) Hold from $\overline{Wr}$↑(S1, SI)[4]	300		ns
T_{FADB}	Adr(DB)(Active) Delay from θ↑(S1)[2]		300	ns
T_{AFDB}	Adr(DB)(Float) Delay from θ↑(S2)[2]	T_{STT} + 20	250	ns
T_{ASS}	Adr(DB) Setup to AdrStb↓(S1-S2)[4]	100		ns
T_{AHS}	Adr(DB)(Valid) Hold from AdrStb↓(S2)[4]	50		ns
T_{STL}	AdrStb↑ Delay from θ↑(S1)[1]		200	ns
T_{STT}	AdrStb↓ Delay from θ↑(S2)[1]		160	ns
T_{SW}	AdrStb Width (S1-S2)[4]	T_{CY} − 100		ns
T_{ASC}	$\overline{Rd}$↓ or $\overline{Wr}$(Ext)↓ Delay from AdrStb↓(S2)[4]	70		ns
T_{DBC}	$\overline{Rd}$↓ or $\overline{Wr}$(Ext)↓ Delay from Adr(DB) (Float)(S2)[4]	20		ns
T_{AK}	DACK↑ or ↓Delay from θ↓(S2, S1) and TC/Mark↑ Delay from θ↑(S3) and TC/Mark↓ Delay from θ↑(S4)[1,5]		270	ns
T_{DCL}	$\overline{Rd}$↓ or $\overline{Wr}$(Ext)↓ Delay from θ↑(S2) and $\overline{Wr}$↓ Delay from θ↑(S3)[2,6]		250	ns
T_{DCT}	$\overline{Rd}$↑ Delay from θ↓(S1, SI) and $\overline{Wr}$↑ Delay from θ↑(S4)[2,7]		200	ns
T_{FAC}	$\overline{Rd}$ or $\overline{Wr}$(Active) from θ↑(S1)[2]		300	ns
T_{AFC}	$\overline{Rd}$ or $\overline{Wr}$(Float) from θ↑(SI)[2]		170	ns
T_{RWM}	$\overline{Rd}$ Width (S2-S1 or SI)[4]	$2T_{CY} + T_\theta - 50$		ns
T_{WWM}	$\overline{Wr}$ Width (S3-S4)[4]	T_{CY} − 50		ns
T_{WWME}	$\overline{Wr}$(Ext) Width (S2-S4)[4]	$2T_{CY}$ − 50		ns

NOTES:

1. Load = 1 TTL. 2. Load = 1 TTL + 50 pF. 3. Load = 1 TTL + (R_L = 3.3K), V_{OH} = 3.3V. 4. Tracking Parameter.
5. $\Delta T_{AK} < 50$ ns. 6. $\Delta T_{DCL} < 50$ ns. 7. $\Delta T_{DCT} < 50$ ns.

A.C. CHARACTERISTICS—PERIPHERAL (SLAVE) MODE [T_A = −55°C to 125°C, V_{CC} = 5.0V ±10%, GND = 0V (Note 1)]

8080 Bus Parameters

READ CYCLE

Symbol	Parameter	Min.	Max.	Unit	Test Conditions
T_{AR}	Adr or $\overline{CS}$↓ Setup to $\overline{RD}$↓	0		ns	
T_{RA}	Adr or $\overline{CS}$↑ Hold from $\overline{RD}$↑	0		ns	
T_{RD}	Data Access from $\overline{RD}$↓	0	300	ns	(Note 2)
T_{DF}	DB→Float Delay from $\overline{RD}$↑	20	150	ns	
T_{RR}	$\overline{RD}$ Width	250		ns	

WRITE CYCLE

Symbol	Parameter	Min.	Max.	Unit	Test Conditions
T_{AW}	Adr Setup to $\overline{WR}$↓	20		ns	
T_{WA}	Adr Hold from $\overline{WR}$↑	35		ns	
T_{DW}	Data Setup to $\overline{WR}$↑	200		ns	
T_{WD}	Data Hold from $\overline{WR}$↑	0		ns	
T_{WW}	$\overline{WR}$ Width	175		ns	

OTHER TIMING

Symbol	Parameter	Min.	Max.	Unit	Test Conditions
T_{RSTW}	Reset Pulse Width	300		ns	
T_{RSTD}	Power Supply↑ (V_{CC}) Setup to Reset↓	500		μs	
T_r	Signal Rise Time		20	ns	
T_f	Signal Fall Time		20	ns	
T_{RSTS}	Reset to First $\overline{I/OWR}$	2		t_{CY}	

NOTES:

1. All timing measurements are made at the following reference voltages unless specified otherwise: Input "1" at 2.0V, "0" at 0.8V
   Output "1" at 2.0V, "0" at 0.8V
2. M8257: C_L = 100 pF, 8257-5: C_L = 150 pF.

Tracking Parameters

Signals labeled as Tracking Parameters (footnotes 4-7 under A.C. Specifications) are signals that follow similar paths through the silicon die. The propagation speed of these signals varies in the manufacturing process but the relationship between all these parameters is constant. The variation is less than or equal to 50 ns.

Suppose the following timing equation is being evaluated,

$$T_{A(MIN)} + T_{B(MAX)} \leq 150 \text{ ns}$$

and only minimum specifications exist for T_A and T_B. If $T_{A(MIN)}$ is used, and if T_A and T_B are tracking parameters, $T_{B(MAX)}$ can be taken as $T_{B(MIN)}$ + 50 ns.

$$T_{A(MIN)} + (T_{B(MIN)}^* + 50 \text{ ns}) \leq 150 \text{ ns}$$

*if T_A and T_B are tracking parameters

PRELIMINARY

M8259A
PROGRAMMABLE INTERRUPT CONTROLLER

MILITARY

- **iAPX 86, 88 Compatible**
- **MCS-80®, MCS-85® Compatible**
- **Eight-Level Priority Controller**
- **Expandable to 64 Levels**
- **Programmable Interrupt Modes**
- **Individual Request Mask Capability**
- **Single +5V Supply (No Clocks)**
- **Military Temperature Range: −55°C to +125°C**

The Intel® M8259A Programmable Interrupt Controller handles up to eight vectored priority interrupts for the CPU. It is cascadable for up to 64 vectored priority interrupts without additional circuitry. It is packaged in a 28-pin DIP, uses NMOS technology and requires a single +5V supply. Circuitry is static, requiring no clock input.

The M8259A is designed to minimize the software and real time overhead in handling multi-level priority interrupts. It has several modes, permitting optimization for a variety of system requirements.

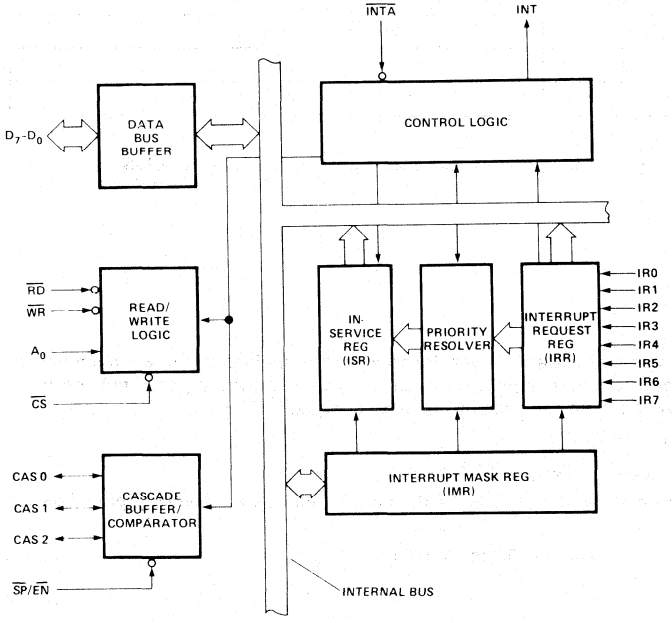

Figure 1. Block Diagram

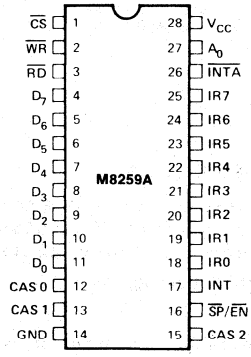

Figure 2. Pin Configuration

ABSOLUTE MAXIMUM RATINGS*

Ambient Temperature Under Bias . . . . . −55°C to 125°C
Storage Temperature . . . . . −65°C to +150°C
Voltage On Any Pin
With Respect to Ground . . . . . −0.5V to +7V
Power Dissipation . . . . . 1 Watt

**NOTICE: Stresses above those listed under "Absolute Maximum Ratings" may cause permanent damage to the device. This is a stress rating only and functional operation of the device at these or any other conditions above those indicated in the operational sections of this specification is not implied.*

D.C. CHARACTERISTICS (T_A = −55°C to 125°C, V_{CC} = 5V ±10%)

Symbol	Parameter	Min.	Max.	Units	Test Conditions
V_{IL}	Input Low Voltage	−.5	.8	V	
V_{IH}	Input High Voltage	2.3	V_{CC} + .5V	V	
V_{OL}	Output Low Voltage		.45	V	I_{OL} = 2.2 mA
V_{OH}	Output High Voltage	2.4		V	I_{OH} = −400 μA
$V_{OH(INT)}$	Interrupt Output High Voltage	3.5 2.4		V V	I_{OH} = −100 μA I_{OH} = −400 μA
I_{LI}	Input Load Current	−10	+10	μA	V_{IN} = V_{CC} to 0V
I_{LOL}	Output Leakage Current	−10	+10	μA	V_{OUT} = 0.45V to V_{CC}
I_{LOH}	Output Leakage Current		10	μA	V_{OUT} = V_{CC}
I_{CC}	V_{CC} Supply Current		85	mA	

CAPACITANCE (T_A = 25°C, V_{CC} = GND = 0V)

Symbol	Parameter	Min.	Typ.	Max.	Unit	Test Conditions
C_{IN}	Input Capacitance			10	pF	fc = 1 MHz
$C_{I/O}$	I/O Capacitance			20	pF	Unmeasured pins returned to V_{SS}

A.C. CHARACTERISTICS (T_A = −55°C to +125°C, V_{CC} = 5V ±10%)

TIMING REQUIREMENTS

Symbol	Parameter	Min.	Max.	Units	Test Conditions
TAHRL	A0/$\overline{CS}$ Setup to $\overline{RD}$/$\overline{INTA}$↓	0		ns	
TRHAX	A0/$\overline{CS}$ Hold after $\overline{RD}$/$\overline{INTA}$↑	0		ns	
TRLRH	$\overline{RD}$ Pulse Width	235		ns	
TAHWL	A0/$\overline{CS}$ Setup to $\overline{WR}$↓	0		ns	
TWHAX	A0/$\overline{CS}$ Hold after $\overline{WR}$↑	0		ns	
TWLWH	$\overline{WR}$ Pulse Width	290		ns	
TDVWH	Data Setup to $\overline{WR}$↑	240		ns	
TWHDX	Data Hold after $\overline{WR}$↑	0		ns	
TJLJH	Interrupt Request Width (Low)	100		ns	See Note 1
TCVIAL	Cascade Setup to Second or Third $\overline{INTA}$↓ (Slave Only)	55		ns	
TRHRL	End of $\overline{RD}$ to Next Command	300		ns	
TWHRL	End of $\overline{WR}$ to Next Command	370		ns	

A.C. CHARACTERISTICS (Continued)

TIMING RESPONSES

Symbol	Parameter	Min.	Max.	Units	Test Conditions
TRLDV	Data Valid from $\overline{RD}/\overline{INTA}\downarrow$		200	ns	C of Data Bus Max. test C = 100 pF Min. test C = 15 pF C_{INT} = 100 pF C_{ENABLE} = 15 pF
TRHDZ	Data Float after $\overline{RD}/\overline{INTA}\uparrow$	10	100	ns	
TJHIH	Interrupt Output Delay		350	ns	
TIALCV	Cascade Valid from First $\overline{INTA}\downarrow$ (Master Only)		565	ns	
TRLEL	Enable Active from $\overline{RD}\downarrow$ or $\overline{INTA}\downarrow$		125	ns	
TRHEH	Enable Inactive from $\overline{RD}\uparrow$ or $\overline{INTA}\uparrow$		150	ns	
TAHDV	Data Valid from Stable Address		200	ns	
TCVDV	Cascade Valid to Valid Data		300	ns	

NOTE:
1. This is the low time required to clear the input latch in the edge triggered mode.

A.C. TESTING INPUT, OUTPUT WAVEFORM

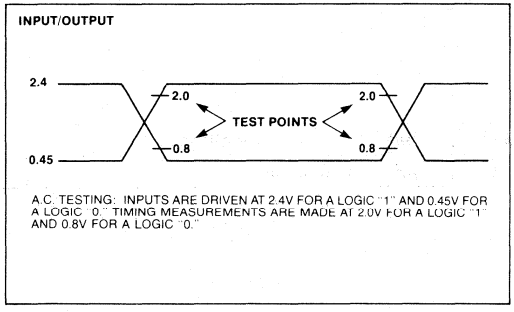

A.C. TESTING LOAD CIRCUIT

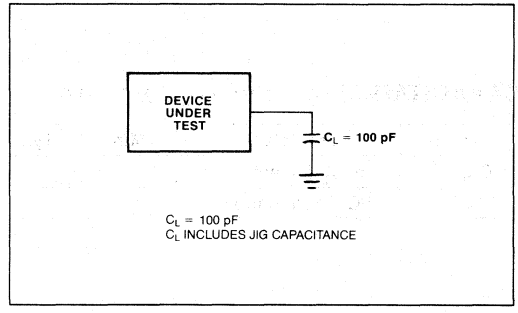

WAVEFORMS

WRITE

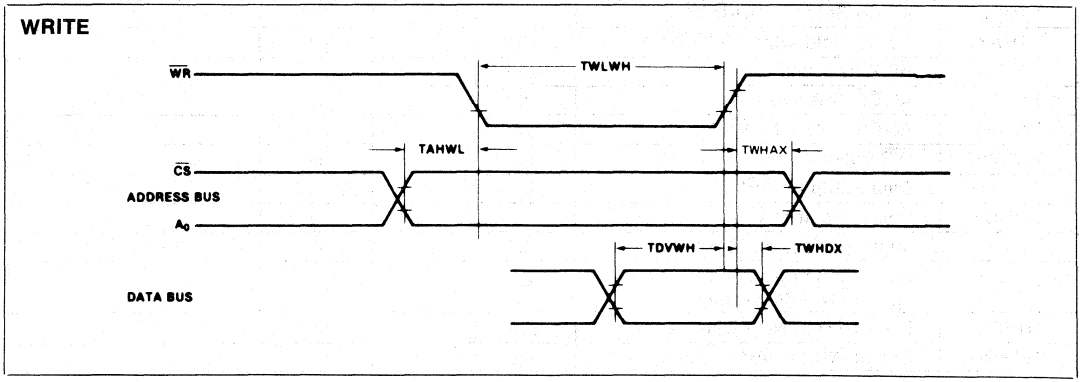

M8282/8283
OCTAL LATCH
MILITARY

- **Fully Parallel 8-Bit Data Register and Buffer**
- **Transparent during Active Strobe**
- **Supports M8080, M8085A, M8048, and Military iAPX 86 Systems**
- **High Output Drive Capability for Driving System Data Bus**
- **3-State Outputs**
- **20-Pin Package with 0.3" Center**
- **No Output Low Noise when Entering or Leaving High Impedance State**
- **Military Temperature Range: −55°C to +125°C**

The M8282 and M8283 are 8-bit bipolar latches with 3-state output buffers. They can be used to implement latches, buffers, or multiplexers. The M8283 inverts the input data at its outputs while the M8282 does not. Thus, all of the principal peripheral and input/output functions of a microcomputer system can be implemented with these devices.

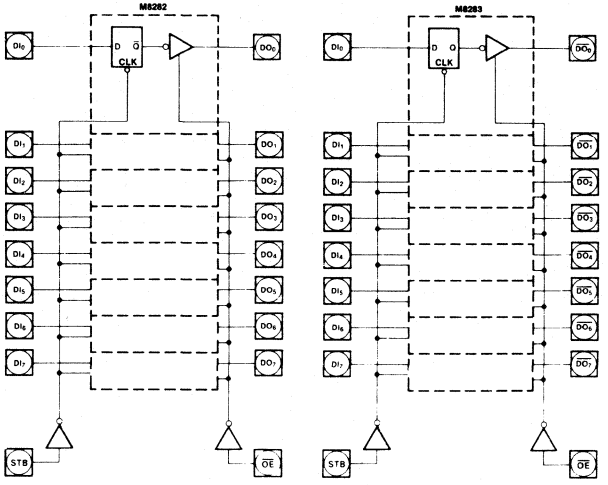

Figure 1. Logic Diagrams

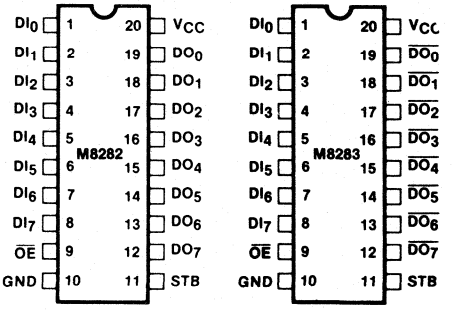

Figure 2. Pin Configurations

Table 1. Pin Description

Symbol	Type	Name and Function
STB	I	**Strobe:** STB is an input control pulse used to strobe data at the data input pins (A_0–A_7) into the data latches. This signal is active HIGH to admit input data. The data is latched at the HIGH to LOW transition of STB.
$\overline{OE}$	I	**Output Enable:** $\overline{OE}$ is an input control signal which when active LOW enables the contents of the data latches onto the data output pin (B_0–B_7). $\overline{OE}$ being inactive HIGH forces the output buffers to their high impedance state.
DI_0–DI_7	I	**Data Input Pins:** Data presented at these pins satisfying setup time requirements when STB is strobed is latched into the data input latches.
DO_0–DO_7 M8282 $\overline{DO}_0$–$\overline{DO}_7$ (M8283)	O	**Data Output Pins:** When $\overline{OE}$ is true, the data in the data latches is presented as inverted (M8283) or non-inverted (M8282) data onto the data output pins.

FUNCTIONAL DESCRIPTION

The M8282 and M8283 octal latches are 8-bit latches with 3-state output buffers. Data having satisfied the setup time requirements is latched into the data latches by strobing the STB line HIGH to LOW. Holding the STB line in its active HIGH state makes the latches appear transparent. Data is presented to the data output pins by activating the $\overline{OE}$ input line. When $\overline{OE}$ is inactive HIGH the output buffers are in their high impedance state. Enabling or disabling the output buffers will not cause negative-going transients to appear on the data output bus.

ABSOLUTE MAXIMUM RATINGS*

Temperature Under Bias ..... −55°C to +125°C
Storage Temperature ..... −65°C to +150°C
All Output and Supply Voltages ..... −0.5V to +7V
All Input Voltages ..... −1.0V to +5.5V
Power Dissipation ..... 1 Watt

NOTICE: Stresses above those listed under "Absolute Maximum Ratings" may cause permanent damage to the device. This is a stress rating only and functional operation of the device at these or any other conditions above those indicated in the operational sections of this specification is not implied. Exposure to absolute maximum rating conditions for extended periods may affect device reliability.

D.C. CHARACTERISTICS (V_{CC} = 5V ±10%, T_A = −55°C to +125°C)

Symbol	Parameter	Min	Max	Units	Test Conditions
V_C	Input Clamp Voltage		−1	V	I_C = −5 mA
I_{CC}	Power Supply Current		160	mA	
I_F	Forward Input Current		−0.2	mA	V_F = 0.45V
I_R	Reverse Input Current		50	μA	V_R = 5.25V
V_{OL}	Output Low Voltage		.45	V	I_{OL} = 20 mA
V_{OH}	Output High Voltage	2.4		V	I_{OH} = −5 mA
I_{OFF}	Output Off Current		±50	μA	V_{OFF} = 0.45 to 5.25V
V_{IL}	Input Low Voltage		0.8	V	V_{CC} = 5.0V See Note 1
V_{IH}	Input High Voltage	2.0		V	V_{CC} = 5.0V See Note 1
C_{IN}	Input Capacitance		12	pF	F = 1 MHz V_{BIAS} = 2.5V, V_{CC} = 5V T_A = 25°C

Notes: 1. Output Loading I_{OL} = 20 mA, I_{OH} = −5 mA, C_L = 300 pF

A.C. CHARACTERISTICS (V_{CC} = 5V ±10%, T_A = −55°C to +125°C)

(Loading: Outputs—I_{OL} = 20 mA, I_{OH} = −5 mA, C_L = 300 pF)

Symbol	Parameter	Min.	Max.	Units	Test Conditions
TIVOV	Input to Output Delay —Inverting —Non-Inverting		 25 35	 ns ns	(See Note 1)
TSHOV	STB to Output Delay —Inverting —Non-Inverting		 45 55	 ns ns	
TEHOZ	Output Disable Time		25	ns	
TELOV	Output Enable Time	10	50	ns	
TIVSL	Input to STB Setup Time	0		ns	
TSLIX	Input to STB Hold Time	25		ns	
TSHSL	STB High Time	15		ns	
TILIH, TOLOH	Input, Output Rise Time		20	ns	From 0.8V to 2.0V
TIHIL, TOHOL	Input, Output Fall Time		12	ns	From 2.0V to 0.8V

NOTE:
1. See waveforms and test load circuit on following page.

M8284A
CLOCK GENERATOR AND DRIVER FOR MILITARY iAPX 86 MICROPROCESSOR

MILITARY

- **Full Military Temperature Range: -55° C to +125° C**
- **Generates the System clock for the Military iAPX 86 Microprocessor**
- **Uses a Crystal or a TTL Signal for Frequency Source**
- **Provides Local READY and MULTIBUS® READY Synchronization**
- **18-Pin Package**
- **Single +5V ±10% Power Supply**
- **Generates System Reset Output from Schmitt Trigger Input**
- **Capable of Clock Synchronization with Other M8284As**

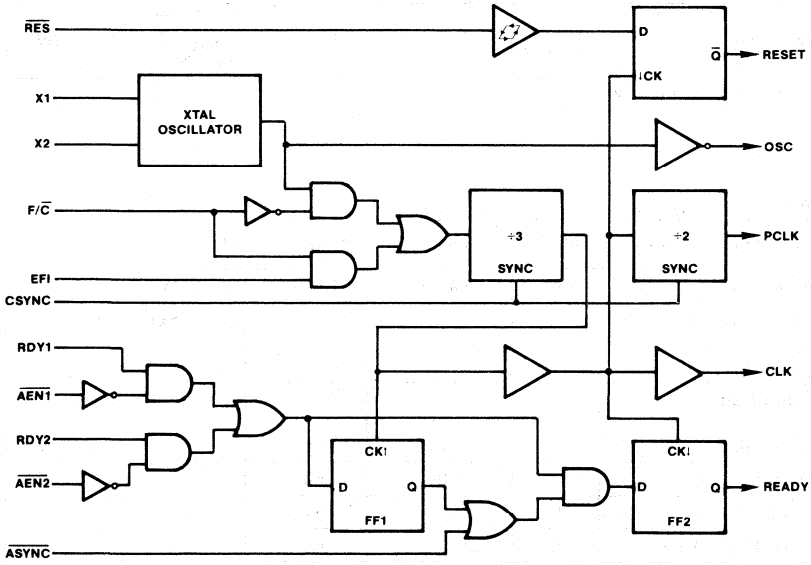

Figure 1. M8284A Block Diagram

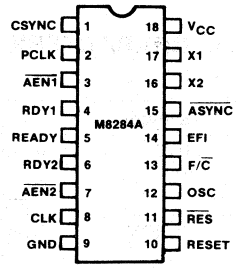

Figure 2. M8284A Pin Configuration

ABSOLUTE MAXIMUM RATINGS*

Temperature Under Bias .....-55°C to +125°C
Storage Temperature .....-65°C to +150°C
All Output and Supply Voltages ..... -0.5V to +7V
All Input Voltages .....-1.0V to +5.5V
Power Dissipation ..... 1 Watt

NOTICE: Stresses above those listed under "Absolute Maximum Ratings" may cause permanent damage to the device. This is a stress rating only and functional operation of the device at these or any other conditions above those indicated in the operational sections of this specification is not implied. Exposure to absolute maximum rating conditions for extended periods may affect device reliability.

D.C. CHARACTERISTICS (T_A = -55°C to +125°C; V_{CC} = 5V ± 10%)

Symbol	Parameter	Min	Max	Units	Test Conditions
I_F	Forward Input Current ($\overline{ASYNC}$) Other Inputs		-1.3 -0.5	mA mA	V_F = 0.45V V_F = 0.45V
I_R	Reverse Input Current ($\overline{ASYNC}$) Other Inputs		50 50	μA μA	$V_R = V_{CC}$ V_R = 5.25V
V_C	Input Forward Clamp Voltage		-1.0	V	I_C = -5mA
I_{CC}	Power Supply Current		162	mA	
V_{IL}	Input LOW Voltage		0.8	V	
V_{IH}	Input HIGH Voltage	2.0		V	
V_{IHR}	Reset Input HIGH Voltage	2.6		V	
V_{OL}	Output LOW Voltage		0.45	V	5mA
V_{OH}	Output HIGH Voltage CLK Other Outputs	4 2.4		V V	-1mA -1mA
V_{IHR}-V_{ILR}	$\overline{RES}$ Input Hysteresis	0.25		V	

A.C. CHARACTERISTICS (T_A = -55°C to +125°C; V_{CC} = 5V ± 10%)

TIMING REQUIREMENTS

Symbol	Parameter	Min	Max	Units	Test Conditions
t_{EHEL}	External Frequency HIGH Time	13		ns	90% - 90% V_{IN}
t_{ELEH}	External Frequency LOW Time	13		ns	10% - 10% V_{IN}
t_{ELEL}	EFI Period	$t_{EHEL} + t_{ELEH} + \delta$		ns	(Note 1)
	XTAL Frequency	12	25	MHz	
t_{R1VCL}	RDY1, RDY2 Active Setup to CLK	35		ns	$\overline{ASYNC}$ = HIGH
t_{R1VCH}	RDY1, RDY2 Active Setup to CLK	35		ns	$\overline{ASYNC}$ = LOW
t_{R1VCL}	RDY1, RDY2 Inactive Setup to CLK	35		ns	
t_{CLR1X}	RDY1, RDY2 Hold to CLK	0		ns	
t_{AYVCL}	$\overline{ASYNC}$ Setup to CLK	50		ns	
t_{CLAYX}	$\overline{ASYNC}$ Hold to CLK	0		ns	
t_{A1VR1V}	$\overline{AEN1}$, $\overline{AEN2}$ Setup to RDY1, RDY2	15		ns	
t_{CLA1X}	$\overline{AEN1}$, $\overline{AEN2}$ Hold to CLK	0		ns	
t_{YHEH}	CSYNC Setup to EFI	20		ns	
t_{EHYL}	CSYNC Hold to EFI	20		ns	
t_{YHYL}	CSYNC Width	$2 \cdot t_{ELEL}$		ns	
t_{I1HCL}	$\overline{RES}$ Setup to CLK	65		ns	(Note 2)
t_{CLI1H}	$\overline{RES}$ Hold to CLK	20		ns	(Note 2)

A.C. CHARACTERISTICS (cont.) (T_A = -55°C to +125°C; V_{CC} = 5V ± 10%)

TIMING RESPONSES†

Symbol	Parameter	Min	Max	Units	Test Conditions
t_{CLCL}	CLK Cycle Period	125		ns	
t_{CHCL}	CLK HIGH Time	(1/3 t_{CLCL}) + 2.0		ns	Fig. 6 and Fig. 7
t_{CLCH}	CLK LOW Time	(2/3 t_{CLCL}) - 15.0		ns	Fig. 6 and Fig. 7
t_{CH1CH2} t_{CL2CL1}	CLK Rise or Fall Time		10	ns	1.0V to 3.5V
t_{PHPL}	PCLK HIGH Time	t_{CLCL} - 20		ns	
t_{PLPH}	PCLK LOW Time	t_{CLCL} - 20		ns	
t_{RYLCL}	Ready Inactive to CLK (See Note 4)	-8		ns	Fig. 8 and Fig. 9
t_{RYHCH}	Ready Active to CLK (See Note 3)	(2/3 t_{CLCL}) - 15.0		ns	Fig. 8 and Fig. 9
t_{CLIL}	CLK to Reset Delay		40	ns	
t_{CLPH}	CLK to PCLK HIGH Delay		22	ns	
t_{CLPL}	CLK to PCLK LOW Delay		22	ns	
t_{OLCH}	OSC to CLK HIGH Delay	-5	22	ns	
t_{OLCL}	OSC to CLK LOW Delay	2	35	ns	

Notes:
1. δ = EFI rise (5 ns max) + EFI fall (5 ns max).
2. Setup and hold necessary only to guarantee recognition at next clock.
3. Applies only to T3 and TW states.
4. Applies only to T2 states.

†Figure 10 illustrates test load measurement condition.

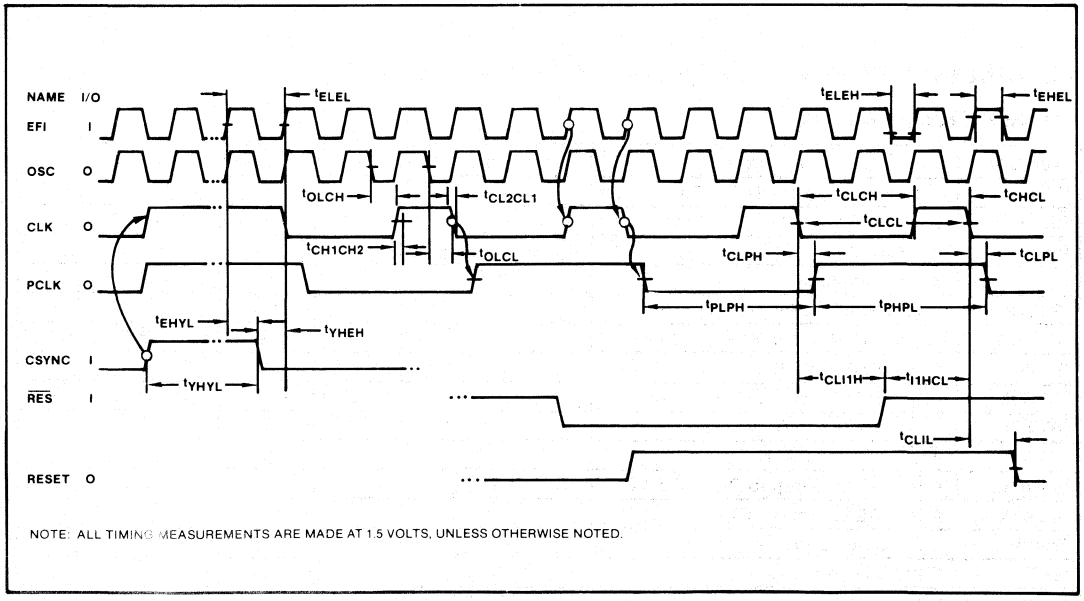

Figure 3. Waveforms for Clocks and Reset Signals

M8286/8287
OCTAL BUS TRANSCEIVER

MILITARY

- **Data Bus Buffer Driver for Military iAPX 86, M8080A, M8085A, and M8048 Processors**
- **High Output Drive Capability for Driving System Data Bus**
- **Fully Parallel 8-Bit Transceivers**
- **3-State Outputs**
- **20-Pin Package with 0.3" Center**
- **No Output Low Noise when Entering or Leaving High Impedance State**
- **Military Temperature Range: −55°C to +125°C**

The M8286 and M8287 are 8-bit bipolar transceivers with 3-state outputs. The M8287 inverts the input data at is outputs while the M8286 does not. Thus, a wide variety of applications for buffering in microcomputer systems can be met.

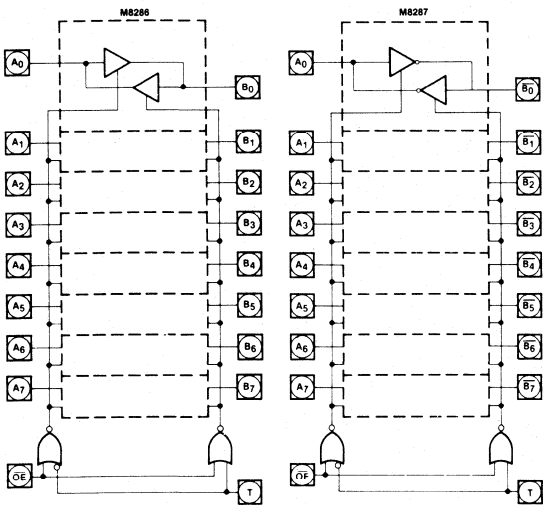

Figure 1. Logic Diagrams

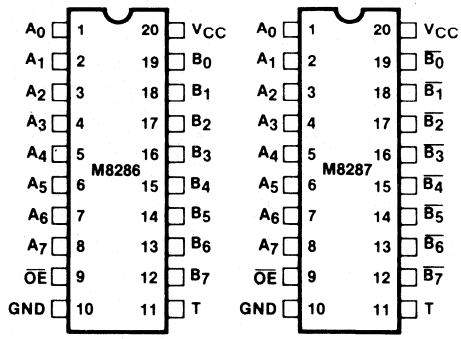

Figure 2. Pin Configurations

Table 1. Pin Description

Symbol	Type	Name and Function
T	I	**Transmit:** T is an input control signal used to control the direction of the transceivers. When HIGH, it configures the transceiver's B_0–B_7 as outputs with A_0–A_7 as inputs. T LOW configures A_0–A_7 as the outputs with B_0–B_7 serving as the inputs.
$\overline{OE}$	I	**Output Enable:** $\overline{OE}$ is an input control signal used to enable the appropriate output driver (as selected by T) onto its respective bus. This signal is active LOW.
A_0–A_7	I/O	**Local Bus Data Pins:** These pins serve to either present data to or accept data from the processor's local bus depending upon the state of the T pin.
B_0–B_7 (M8286) $\overline{B_0}$–$\overline{B_7}$ (M8287)	I/O	**System Bus Data Pins:** These pins serve to either present data to or accept data from the system bus depending upon the state of the T pin.

FUNCTIONAL DESCRIPTION

The M8286 and M8287 transceivers are 8-bit transceivers with high impedance outputs. With T active HIGH and $\overline{OE}$ active LOW, data at the A_0–A_7 pins is driven onto the B_0–B_7 pins. With T inactive LOW and $\overline{OE}$ active LOW data at the B_0–B_7 pins is driven onto the A_0–A_7 pins. No output low glitching will occur whenever the transceivers are entering or leaving the high impedance state.

ABSOLUTE MAXIMUM RATINGS*

Temperature Under Bias . . . . . −55°C to +125°C
Storage Temperature . . . . . −65°C to +150°C
All Output and Supply Voltages . . . . . −0.5V to +7V
All Input Voltages . . . . . −1.0V to +5.5V
Power Dissipation . . . . . 1 Watt

**NOTICE: Stresses above those listed under "Absolute Maximum Ratings" may cause permanent damage to the device. This is a stress rating only and functional operation of the device at these or any other conditions above those indicated in the operational sections of this specification is not implied. Exposure to absolute maximum rating conditions for extended periods may affect device reliability.*

D.C. CHARACTERISTICS (V_{CC} = 5V ±10%, T_A = −55°C to +125°C)

Symbol	Parameter	Min	Max	Units	Test Conditions
V_C	Input Clamp Voltage		-1	V	I_C = -5 mA
I_{CC}	Power Supply Current—8287 —8286		130 160	mA mA	
I_F	Forward Input Current		-0.2	mA	V_F = 0.45V
I_R	Reverse Input Current		50	μA	V_R = 5.25V
V_{OL}	Output Low Voltage —B Outputs —A Outputs		.45 .45	V V	I_{OL} = 20 mA I_{OL} = 10 mA
V_{OH}	Output High Voltage —B Outputs —A Outputs	2.4 2.4		V V	I_{OH} = -5 mA I_{OH} = -1 mA
I_{OFF} I_{OFF}	Output Off Current Output Off Current		I_F I_R		V_{OFF} = 0.45V V_{OFF} = 5.25V
V_{IL}	Input Low Voltage —A Side —B Side		0.8 0.9	V V	V_{CC} = 5.0V, See Note 1 V_{CC} = 5.0V, See Note 1
V_{IH}	Input High Voltage	2.0		V	V_{CC} = 5.0V, See Note 1
C_{IN}	Input Capacitance		12	pF	F = 1 MHz V_{BIAS} = 2.5V, V_{CC} = 5V T_A = 25°C

NOTE:
1. B outputs—I_{OL} = 20 mA, I_{OH} = −5 mA, C_L = 300 pF
   A Outputs—I_{OL} = 10 mA, I_{OH} = −1 mA, C_L = 100 pF

A.C. CHARACTERISTICS (V_{CC} = 5V ±10%, T_A = −55°C to +125°C)

(Loading: B Outputs—I_{OL} = 20 mA, I_{OH} = −5 mA, C_L = 300 pF
A Outputs—I_{OL} = 10 mA, I_{OH} = −1 mA, C_L = 100 pF)

Symbol	Parameter	Min.	Max.	Units	Test Conditions
TIVOV	Input to Output Delay Inverting Non-Inverting		 22 30	 ns ns	(See Note 1)
TEHTV	Transmit/Receive Hold Time	TEHOZ		ns	
TTVEL	Transmit/Receive Setup	30		ns	
TEHOZ	Output Disable Time		18	ns	
TELOV	Output Enable Time	10	30	ns	
TILIH, TOLOH	Input, Output Rise Time		20	ns	From 0.8V to 2.0V
TIHIL, TOHOL	Input, Output Fall Time		12	ns	From 2.0V to 0.8V

NOTE:
1. See waveforms and test load circuit on following pages.

M8288
BUS CONTROLLER
FOR MILITARY iAPX 86

MILITARY

- **Bipolar Drive Capability**
- **Provides Advanced Commands**
- **Provides Wide Flexibility in System Configurations**
- **Military Temperature Range: −55°C to +125°C**
- **3-State Command Output Drivers**
- **Configurable for Use with an I/O Bus**
- **Facilitates Interface to One or Two Multi-Master Busses**

The Intel® M8288 Controller is a 20-pin bipolar component for use with medium-to-large iAPX 86, 88 processing systems. The bus controller provides command and control timing generation as well as bipolar bus drive capability while optimizing system performance.

A strapping option on the bus controller configures it for use with a multi-master system bus and separate I/O bus.

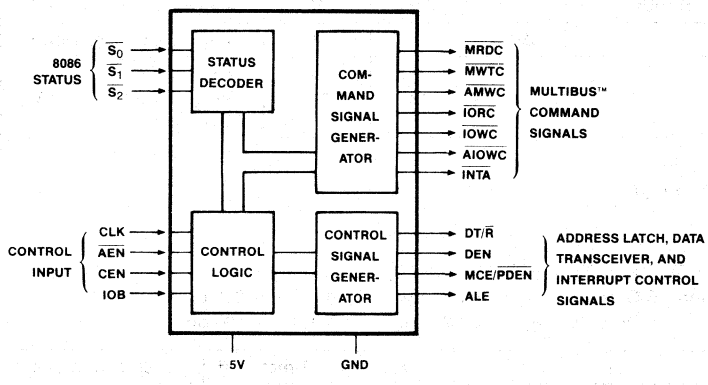

Figure 1. Block Diagram

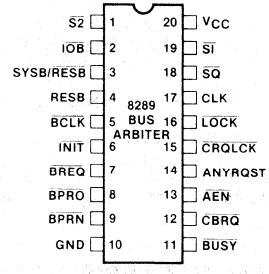

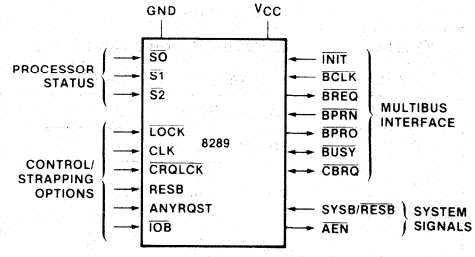

Figure 2. Pin Configuration

ABSOLUTE MAXIMUM RATINGS*

Temperature Under Bias ..... −55°C to 125°C
Storage Temperature ..... −65°C to +150°C
All Output and Supply Voltages ..... −0.5V to +7V
All Input Voltages ..... −1.0V to +5.5V
Power Dissipation ..... 1.5 Watt

**NOTICE: Stresses above those listed under "Absolute Maximum Ratings" may cause permanent damage to the device. This is a stress rating only and functional operation of the device at these or any other conditions above those indicated in the operational sections of this specification is not implied. Exposure to absolute maximum rating conditions for extended periods may affect device reliability.*

D.C. CHARACTERISTICS (V_{CC} =5V ±10%, T_A = −55°C to 125°C)

Symbol	Parameter	Min	Max	Unit	Test Conditions
V_C	Input Clamp Voltage		−1	V	I_C = −5 mA
I_{CC}	Power Supply Current		230	mA	
I_F	Forward Input Current		−0.7	mA	V_F = 0.45V
I_R	Reverse Input Current		50	μA	V_R = V_{CC}
V_{OL}	Output Low Voltage— Command Outputs Control Outputs		 0.5 0.5	 V V	 I_{OL} = 20 mA I_{OL} = 16 mA
V_{OH}	Output High Voltage— Command Outputs Control Outputs	 2.4 2.4		 V V	 I_{OH} = −5 mA I_{OH} = −1 mA
V_{IL}	Input Low Voltage		0.8	V	
V_{IH}	Input High Voltage	2.0		V	
I_{OFF}	Output Off Current		100	μA	V_{OFF} = 0.4 to 5.25V

A.C. CHARACTERISTICS (V_{CC} =5V ±10%, T_A = −55°C to 125°C)

TIMING REQUIREMENTS

Symbol	Parameter	Min	Max	Unit	Test Conditions
TCLCL	CLK Cycle Period	125		ns	
TCLCH	CLK Low Time	66		ns	
TCHCL	CLK High Time	40		ns	
TSVCH	Status Active Setup Time	35		ns	
TCHSV	Status Active Hold Time	10		ns	
TSHCL	Status Inactive Setup Time	35		ns	
TCLSH	Status Inactive Hold Time	10		ns	
TILIH	Input Rise Time		20	ns	From 0.8V to 2.0V
TIHIL	Input Fall Time		12	ns	From 2.0V to 0.8V

A.C. CHARACTERISTICS (Continued)

TIMING RESPONSES

Symbol	Parameter	Min	Max	Unit	Test Conditions
TCVNV	Control Active Delay	5	45	ns	
TCVNX	Control Inactive Delay	10	50	ns	
TCLLH,TCLMCH	ALE MCE Active Delay (from CLK)		25	ns	
TSVLH, TSVMCH	ALE MCE Active Delay (from Status)		25	ns	$\overline{MRDC}$
TCHLL	ALE Inactive Delay	4	15	ns	$\overline{IORC}$
TCLML	Command Active Delay	10	35	ns	$\overline{MWTC}$
TCLMH	Command Inactive Delay	10	35	ns	$\overline{IOWC}$
TCHDTL	Direction Control Active Delay		50	ns	$\overline{INTA}$
TCHDTH	Direction Control Inactive Delay		30	ns	$\overline{AMWC}$
TAELCH	Command Enable Time		40	ns	$\overline{AIOWC}$
TAEHCZ	Command Disable Time		40	ns	
TAELCV	Enable Delay Time	115	200	ns	Other
TAEVNV	$\overline{AEN}$ to DEN		20	ns	
TCEVNV	CEN to DEN, PDEN		30	ns	
TCELRH	CEN to Command		TCLML	ns	
TOLOH	Output Rise Time		20	ns	From 0.8V to 2.0V
TOHOL	Output Fall Time		12	ns	From 2.0V to 0.8V

$\overline{MRDC}$, $\overline{IORC}$, $\overline{MWTC}$, $\overline{IOWC}$, $\overline{INTA}$, $\overline{AMWC}$, $\overline{AIOWC}$: I_{OL} = 20 mA, I_{OH} = −5 mA, C_L = 300 pF

Other: I_{OL} = 16 mA, I_{OH} = −1 mA, C_L = 80 pF

A.C. TESTING INPUT, OUTPUT WAVEFORM

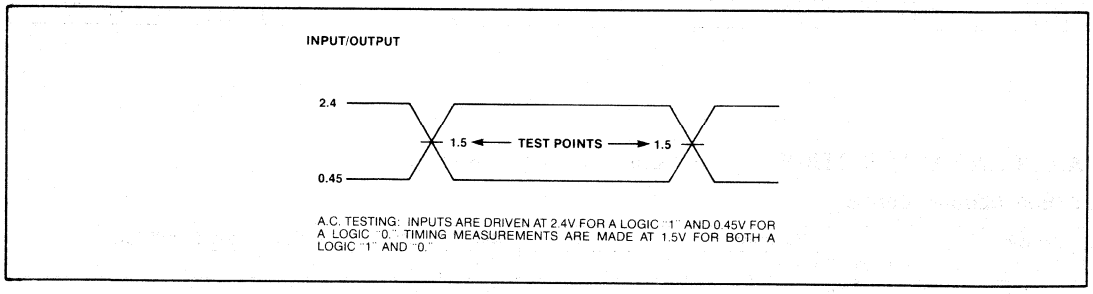

A.C. TESTING: INPUTS ARE DRIVEN AT 2.4V FOR A LOGIC "1" AND 0.45V FOR A LOGIC "0." TIMING MEASUREMENTS ARE MADE AT 1.5V FOR BOTH A LOGIC "1" AND "0."

TEST LOAD CIRCUITS—3-STATE COMMAND OUTPUT TEST LOAD

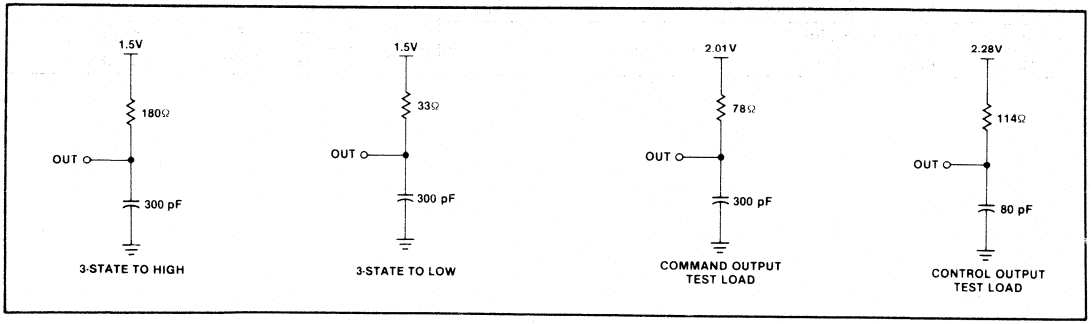

WAVEFORMS

DEN, PDEN QUALIFICATION TIMING

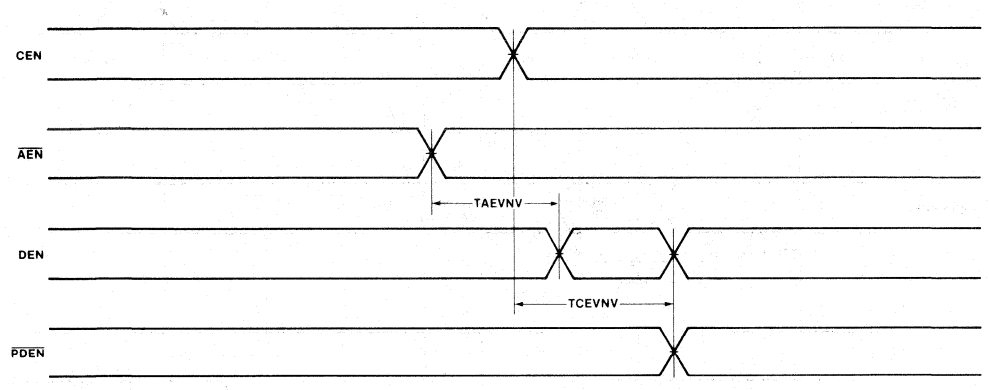

ADDRESS ENABLE (AEN) TIMING (3-STATE ENABLE/DISABLE)

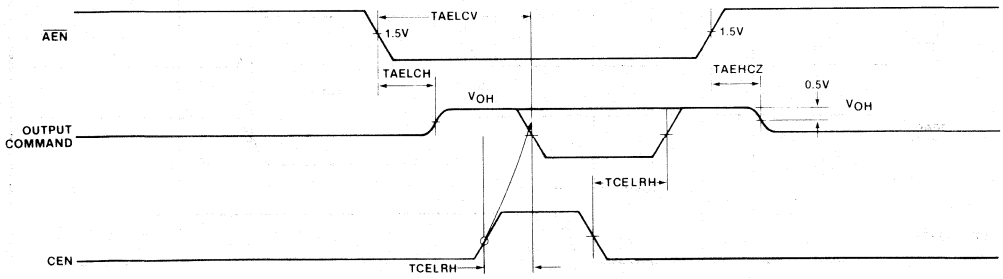

NOTE: CEN must be low or valid prior to T2 to prevent the command from being generated.

WAVEFORMS (Continued)

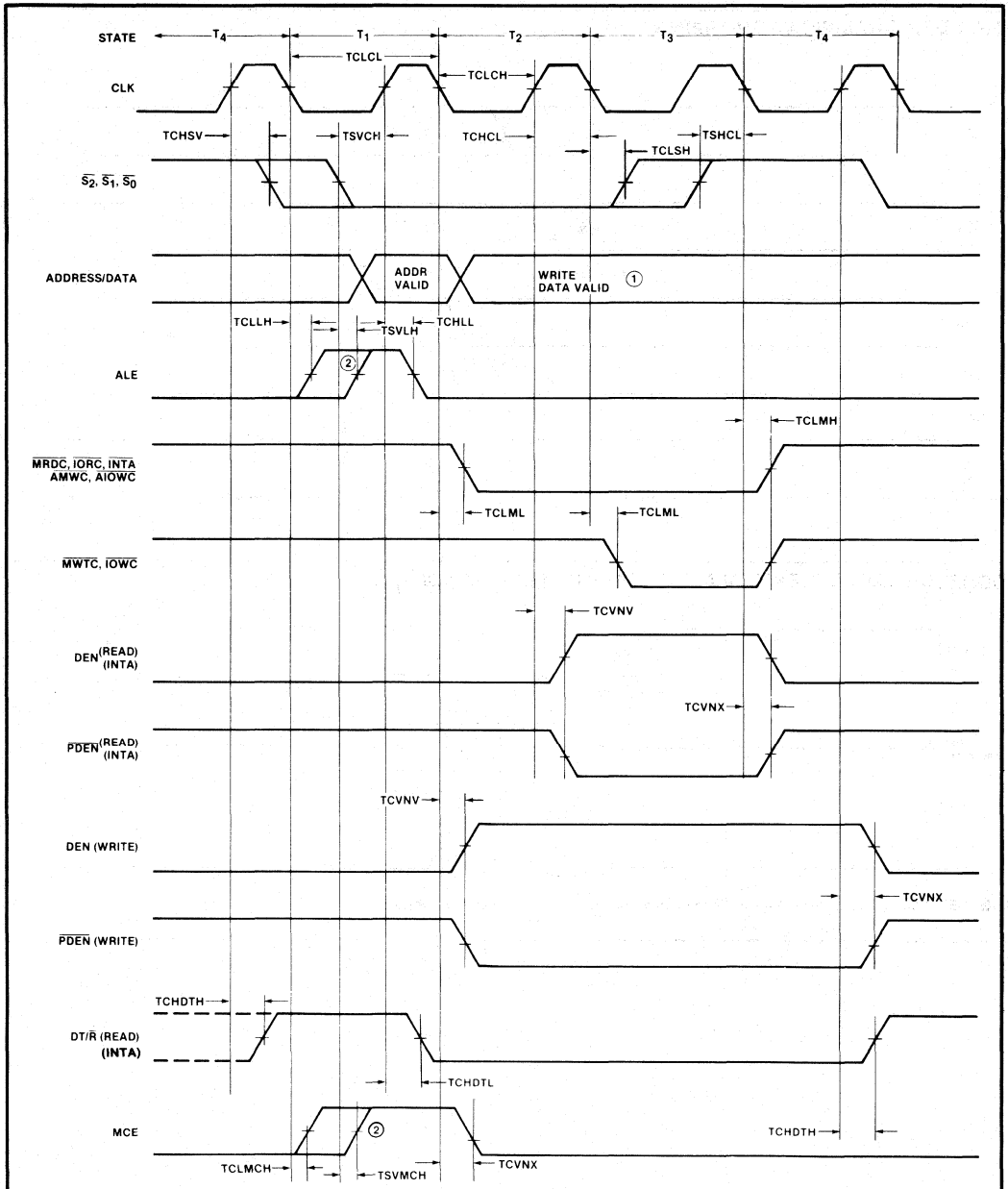

NOTES:
1. ADDRESS/DATA BUS IS SHOWN ONLY FOR REFERENCE PURPOSES.
2. LEADING EDGE OF ALE AND MCE IS DETERMINED BY THE FALLING EDGE OF CLK OR STATUS GOING ACTIVE, WHICHEVER OCCURS LAST.
3. ALL TIMING MEASUREMENTS ARE MADE AT 1.5V UNLESS SPECIFIED OTHERWISE.

M8289
BUS ARBITER
MILITARY

- **Provides Multi-Master System Bus Protocol**
- **Synchronizes iAPX 86, 88 Processors with Multi-Master Bus**
- **Provides Simple Interface with 8288 Bus Controller**
- **Four Operating Modes for Flexible System Configuration**
- **Military Temperature Range: −55°C to +125°C**
- **Provides System Bus Arbitration for M8089 IOP in Remote Mode**

The Intel® 8289 Bus Arbiter is a 20-pin, 5-volt-only bipolar component for use with medium to large iAPX 86, 88 multimaster/multiprocessing systems. The 8289 provides system bus arbitration for systems with multiple bus masters, such as an M8086 CPU with M8089 IOP in its REMOTE mode, while providng bipolar buffering and drive capability.

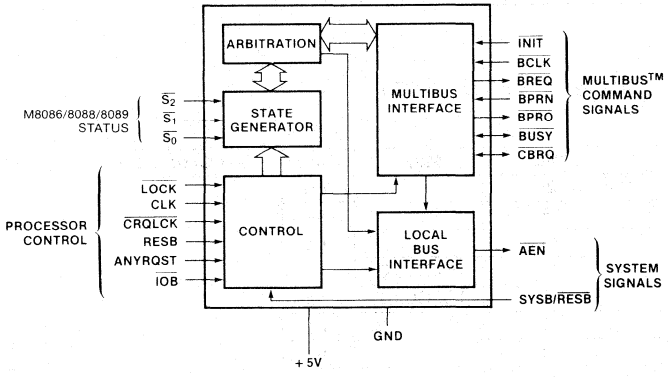

Figure 1. Block Diagram

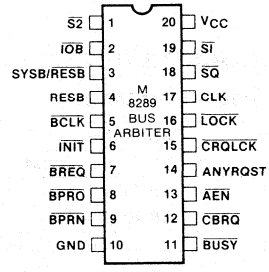

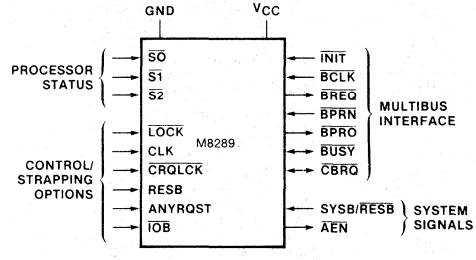

Figure 2. Pin Configuration

ABSOLUTE MAXIMUM RATINGS*

Temperature Under Bias ..... −55°C to +125°C
Storage Temperature ..... −65°C to +150°C
All Output and Supply Voltages ..... −0.5V to +7V
All Input Voltages ..... −1.0V to +5.5V
Power Dissipation ..... 1.5 Watt

**NOTICE: Stresses above those listed under "Absolute Maximum Ratings" may cause permanent damage to the device. This is a stress rating only and functional operation of the device at these or any other conditions above those indicated in the operational sections of this specification is not implied. Exposure to absolute maximum rating conditions for extended periods may affect device reliability.*

D.C. CHARACTERISTICS (T_A = -55°C to +125°C, V_{CC} = 5V ±10%)

Symbol	Parameter	Min	Max	Unit	Test Conditions
V_C	Input Clamp Voltage		−1.0	V	V_{CC} = 4.50V, I_C = −5 mA
I_F	Input Forward Current		−0.5	mA	V_{CC} = 5.50V, V_F = 0.45V
I_R	Reverse Input Leakage Current		60	μA	V_{CC} = 5.50, V_R = 5.50
V_{OL}	Output Low Voltage				
	$\overline{BUSY}$, $\overline{CBRQ}$		0.50	V	I_{OL} = 18 mA
	$\overline{AEN}$		0.50	V	I_{OL} = 14 mA
	$\overline{BPRO}$, $\overline{BREQ}$		0.50	V	I_{OL} = 9 mA
V_{OH}	Output High Voltage				
	$\overline{BUSY}$, $\overline{CBRQ}$	Open Collector			
	All Other Outputs	2.4		V	I_{OH} = 350 μA
I_{CC}	Power Supply Current		165	mA	
V_{IL}	Input Low Voltage		.8	V	
V_{IH}	Input High Voltage	2.0		V	
Cin Status	Input Capacitance		25	pF	
Cin (Others)	Input Capacitance		12	pF	

A.C. CHARACTERISTICS (V_{CC} = 5V ± 10%, T_A = −55°C to +125°C)

TIMING REQUIREMENTS

Symbol	Parameter	Min	Max	Unit	Test Conditions
TCLCL	CLK Cycle Period	125		ns	
TCLCH	CLK Low Time	65		ns	
TCHCL	CLK High Time	35		ns	
TSVCH	Status Active Setup	65	TCLCL-10	ns	
TSHCL	Status Inactive Setup	50	TCLCL-10	ns	
THVCH	Status Active Hold	10		ns	
THVCL	Status Inactive Hold	10		ns	
TBYSBL	$\overline{BUSY}$↑↓Setup to $\overline{BCLK}$↓	20		ns	
TCBSBL	$\overline{CBRQ}$↑↓Setup to $\overline{BCLK}$↓	20		ns	
TBLBL	$\overline{BCLK}$ Cycle Time	100		ns	
TBHCL	$\overline{BCLK}$ High Time	30	65[TBLBL]	ns	
TCLLL1	$\overline{LOCK}$ Inactive Hold	20		ns	
TCLLL2	$\overline{LOCK}$ Active Setup	40		ns	
TPNBL	$\overline{BPRN}$↑↓ to $\overline{BCLK}$↓ Setup Time	15		ns	
TCLSR1	SYSB/$\overline{RESB}$ Setup	0		ns	
TCLSR2	SYSB/$\overline{RESB}$ Hold	20		ns	
TIVIH	Initialization Pulse Width	3 TBLBL + 3 TCLCL		ns	
TILIH	Input Rise Time		20	ns	From 0.8V to 2.0V
TIHIL	Input Fall Time		12	ns	From 2.0V to 0.8V

A.C. CHARACTERISTICS (Continued)

TIMING RESPONSES

Symbol	Parameter	Min	Max	Unit	Test Conditions
TBLBRL	$\overline{BCLK}$ to $\overline{BREQ}$ Delay↑↓		35	ns	
TBLPOH	$\overline{BCLK}$ to $\overline{BPRO}$↑↓ (See Note 1)		40	ns	
TPNPO	$\overline{BPRN}$↑↓ to $\overline{BPRO}$↑↓Delay (See Note 1)		25	ns	
TBLBYL	$\overline{BCLK}$ to $\overline{BUSY}$ Low		60	ns	
TBLBYH	$\overline{BCLK}$ to $\overline{BUSY}$ Float (See Note 2)		35	ns	
TCLAEH	CLK to $\overline{AEN}$ High		65	ns	
TBLAEL	$\overline{BCLK}$ to $\overline{AEN}$ Low		40	ns	
TBLCBL	$\overline{BCLK}$ to $\overline{CBRQ}$ Low		60	ns	
TBLCBH	$\overline{BCLK}$ to $\overline{CBRQ}$ Float (See Note 2)		35	ns	
TOLOH	Output Rise Time		20	ns	From 0.8V to 2.0V
TOHOL	Output Fall Time		12	ns	From 2.0V to 0.8V

NOTES:
1. BCLK generates the first BPRO wherein subsequent BPRO changes lower in the chain are generated through BPRN.
2. Measured at .5V above GND.
3. Denotes that spec applies to both transitions of the signal.

A.C. TESTING INPUT, OUTPUT WAVEFORM

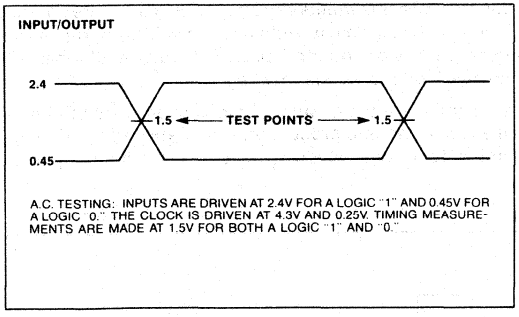

A.C. TESTING LOAD CIRCUIT

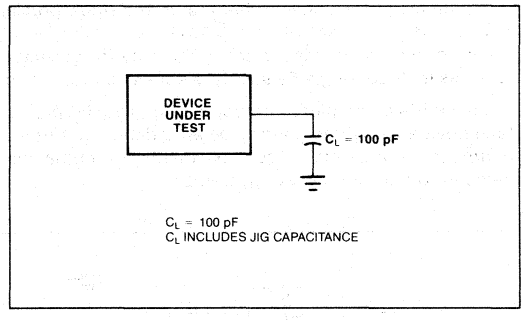

A.C. TEST CIRCUITS

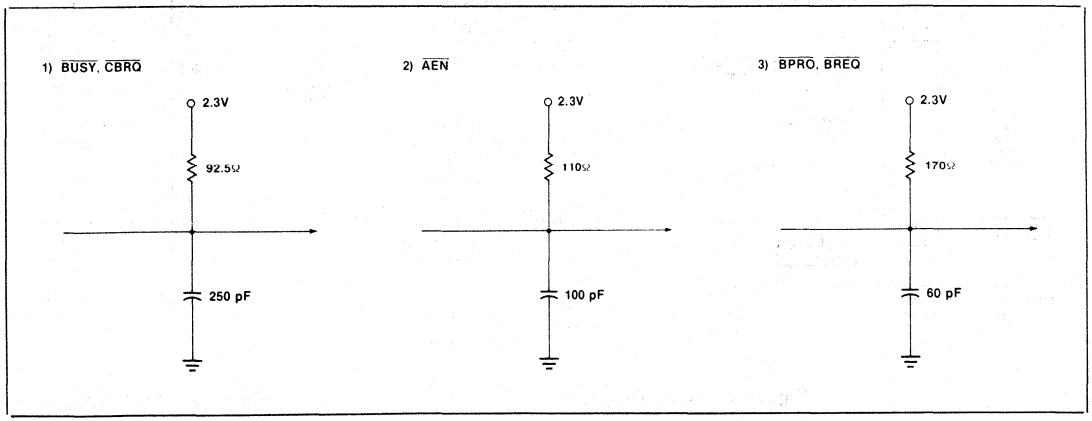

PRELIMINARY

M8741A
UNIVERSAL PERIPHERAL INTERFACE 8-BIT MICROCOMPUTER

MILITARY

- **8-Bit CPU plus EPROM, RAM, I/O, Timer and Clock in a Single Package**
- **One 8-Bit Status and Two Data Registers for Asynchronous Slave-to-Master Interface**
- **DMA, Interrupt, or Polled Operation Supported**
- **1024 x 8 EPROM, 64 x 8 RAM, 8-Bit Timer/Counter, 18 Programmable I/O Pins**
- **Fully Compatible with MCS-48®, MCS-80®, MCS-85®, and iAPX 86, 88 Families**
- **Expandable I/O**
- **Over 90 Instructions: 70% Single Byte**
- **Military Temperature Range: −55°C to +100°C**

The Intel® M8741A is a general purpose, programmable interface device designed for use with a variety of 8-bit microprocessor systems. It contains a low cost microcomputer with program memory, data memory, 8-bit CPU, I/O ports, timer/counter, and clock in a single 40-pin package. Interface registers are included to enable the UPI device to function as a peripheral controller in MCS-48®, MCS-80®, MCS-85®, iAPX 86, 88 systems.

The M8741A has 1K words of program memory and 64 words of data memory on-chip. The device has two 8-bit, TTL compatible I/O ports and two test inputs. Individual port lines can function as either inputs or outputs under software control. I/O can be expanded with the M8243 device which is directly compatible and has 16 I/O lines. An 8-bit programmable timer/counter is included in the UPI device for generating timing sequences or counting external inputs. Additional UPI features include: single 5V supply, single-step mode for debug and dual working register banks.

Because it's a complete microcomputer, the UPI provides more flexibility for the designer than conventional LSI interface devices. It is designed to be an efficient controller as well as an arithmetic processor. Applications include keyboard scanning, printer control, display multiplexing and similar functions which involve interfacing peripheral devices to microprocessor systems.

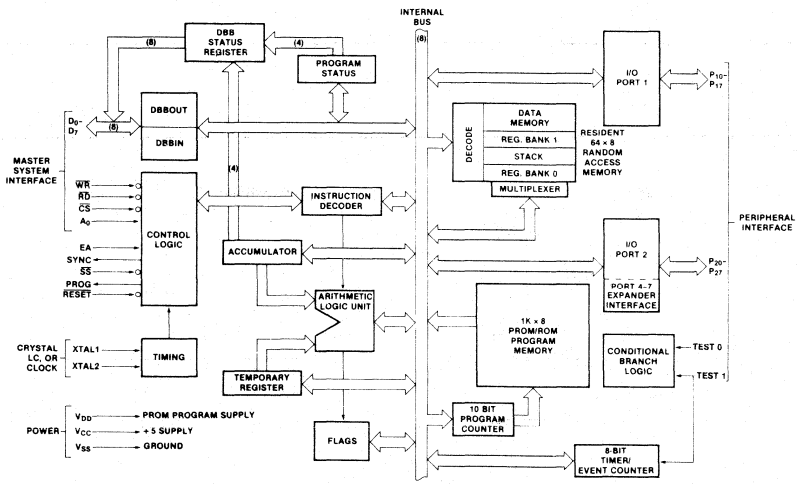

Figure 1. Block Diagram

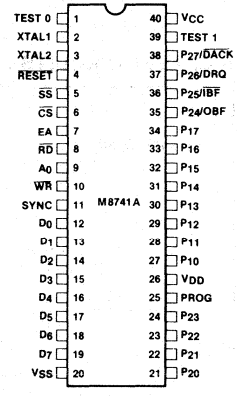

Figure 2. Pin Configuration

ABSOLUTE MAXIMUM RATINGS*

Ambient Temperature Under Bias ..... -5° C to 100° C
Storage Temperature ..... – 65 °C to + 150 °C
Voltage on Any Pin With Respect to Ground ..... −0.5V to +7V
Power Dissipation ..... 1.5 Watt

NOTICE: Stresses above those listed under "Absolute Maximum Ratings" may cause permanent damage to the device. This is a stress rating only and functional operation of the device at these or any other conditions above those indicated in the operational sections of this specification is not implied. Exposure to absolute maximum rating conditions for extended periods may affect device reliability.

D.C. CHARACTERISTICS (T_A = −55°C to 100°C, V_{CC} = V_{DD} = +5V ±10%)

Symbol	Parameter	Min.	Max.	Unit	Test Conditions
V_{IL}	Input Low Voltage (Except XTAL1, XTAL2, $\overline{RESET}$)	– 0.5	0.7	V	
V_{IL1}	Input Low Voltage (XTAL1, XTAL2, $\overline{RESET}$)	– 0.5	0.5	V	
V_{IH}	Input High Voltage (Except XTAL1, XTAL2, $\overline{RESET}$)	2.3	V_{CC}		
V_{IH1}	Input High Voltage (XTAL1, XTAL2, $\overline{RESET}$)	3.8	V_{CC}	V	
V_{OL}	Output Low Voltage (D_0-D_7)		0.45	V	I_{OL} = 1.2 mA
V_{OL1}	Output Low Voltage ($P_{10}P_{17}$, $P_{20}P_{27}$, Sync)		0.45	V	I_{OL} = 0.8 mA
V_{OL2}	Output Low Voltage (Prog)		0.45	V	I_{OL} = 0.8 mA
V_{OH}	Output High Voltage (D_0-D_7)	2.4		V	I_{OH} = -240 μA
V_{OH1}	Output High Voltage (All Other Outputs)	2.4		V	I_{OH} = -30 μA
I_{IL}	Input Leakage Current (T_0, T_1, $\overline{RD}$, $\overline{WR}$, $\overline{CS}$, A_0, EA)		± 10	μA	$V_{SS} \leq V_{IN} \leq V_{CC}$
I_{OZ}	Output Leakage Current (D_0-D_7, High Z State)		± 10	μA	$V_{SS} + 0.45 \leq V_{OUT} \leq V_{CC}$
I_{LI}	Low Input Load Current ($P_{10}P_{17}$, $P_{20}P_{27}$)		0.7	mA	V_{IL} = 0.8V
I_{LI1}	Low Input Load Current ($\overline{RESET}$, $\overline{SS}$)		0.3	mA	V_{IL} = 0.8V
I_{DD}	V_{DD} Supply Current		25	mA	Typical = 10 mA
$I_{CC} + I_{DD}$	Total Supply Current		155	mA	Typical = 80 mA

A.C. CHARACTERISTICS (T_A = −55°C to 100°C, V_{CC} = V_{DD} = +5V ±10%)

DBB READ

Symbol	Parameter	Min.	Max.	Unit	Test Conditions
t_{AR}	$\overline{CS}$, A_0 Setup to $\overline{RD}$↓	0		ns	
t_{RA}	$\overline{CS}$, A_0 Hold After $\overline{RD}$↑	0		ns	
t_{RR}	$\overline{RD}$ Pulse Width	350		ns	
t_{AD}	$\overline{CS}$, A_0 to Data Out Delay		300	ns	C_L = 150 pF
t_{RD}	$\overline{RD}$↓ to Data Out Delay		300	ns	C_L = 150 pF
t_{DF}	$\overline{RD}$↑ to Data Float Delay		100	ns	
t_{CY}	Cycle Time	4.17	15	μs	3.6 MHz XTAL

DBB WRITE

Symbol	Parameter	Min.	Max.	Unit	Test Conditions
t_{AW}	$\overline{CS}$, A_0 Setup to $\overline{WR}$↓	0		ns	
t_{WA}	$\overline{CS}$, A_0 Hold After $\overline{WR}$↑	0		ns	
t_{WW}	$\overline{WR}$ Pulse Width	350		ns	
t_{DW}	Data Setup to $\overline{WR}$↑	200		ns	
t_{WD}	Data Hold After $\overline{WR}$↑	0		ns	

A.C. CHARACTERISTICS (Continued)

PORT 2

Symbol	Parameter	Min.	Max.	Unit	Test Conditions
t_{CP}	Port Control Setup Before Falling Edge of PROG	115		ns	
t_{PC}	Port Control Hold After Falling Edge of PROG	65		ns	
t_{PR}	PROG to Time P2 Input Must Be Valid		860	ns	
t_{PF}	Input Data Hold Time	0	160	ns	
t_{DP}	Output Data Setup Time	230		ns	
t_{PD}	Output Data Hold Time	25		ns	
t_{PP}	PROG Pulse Width	920		ns	

DMA

Symbol	Parameter	Min.	Max.	Unit	Test Conditions
t_{ACC}	$\overline{DACK}$ to $\overline{WR}$ or $\overline{RD}$	0		ns	
t_{CAC}	$\overline{RD}$ or $\overline{WR}$ to $\overline{DACK}$	0		ns	
t_{ACD}	$\overline{DACK}$ to Data Valid		300	ns	$C_L = 150$ pF
t_{CRQ}	$\overline{RD}$ or $\overline{WR}$ to DRQ Cleared		250	ns	

A.C. TESTING INPUT, OUTPUT WAVEFORM

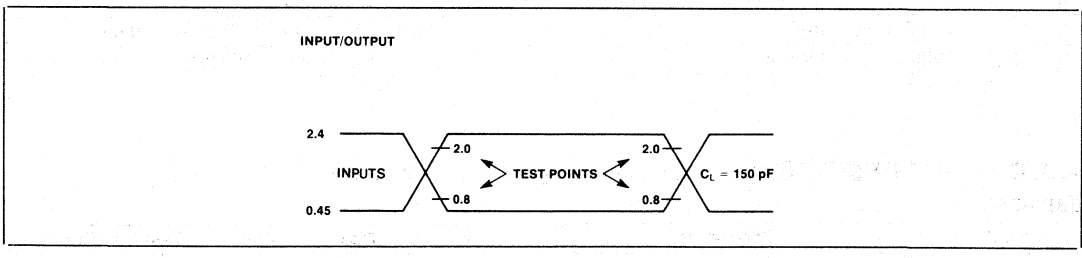

WAVEFORMS

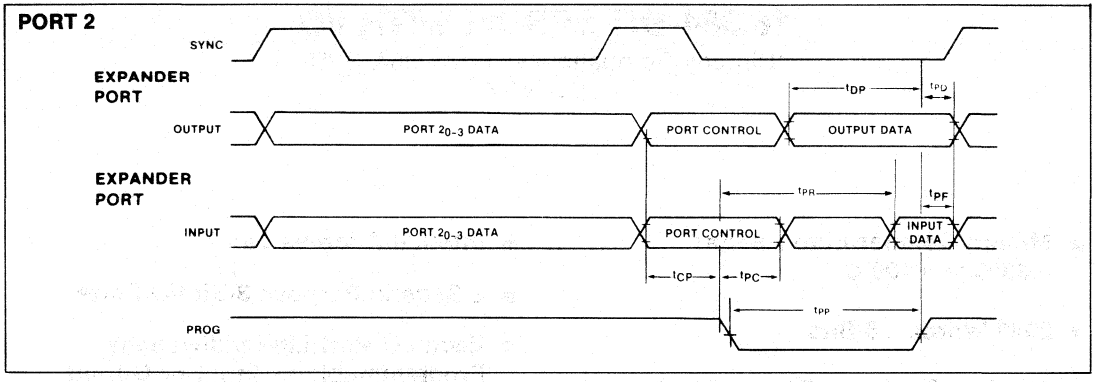
PORT 2
SYNC
EXPANDER PORT
OUTPUT
PORT 2_{0-3} DATA
PORT CONTROL
OUTPUT DATA
t_{DP}
t_{PD}
EXPANDER PORT
INPUT
PORT 2_{0-3} DATA
PORT CONTROL
INPUT DATA
t_{PR}
t_{PF}
t_{CP}
t_{PC}
t_{PP}
PROG

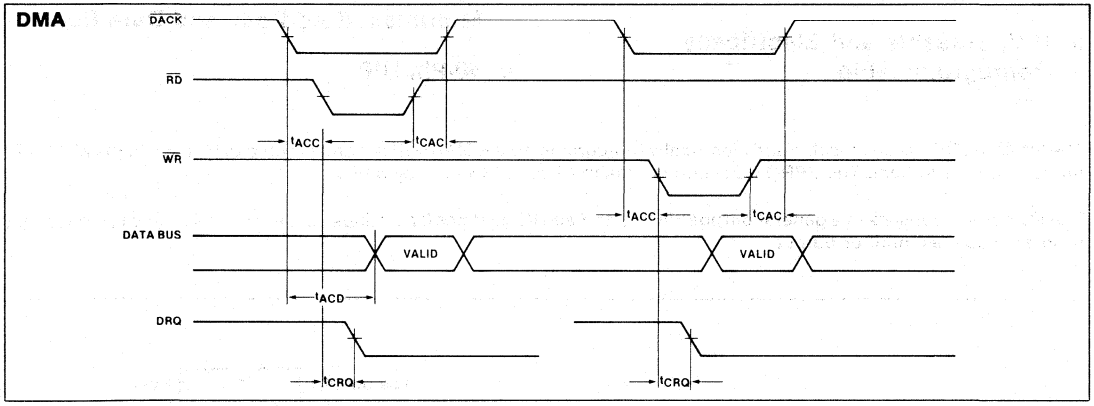
DMA
DACK
RD
WR
DATA BUS
VALID
VALID
DRQ
t_{ACC}
t_{CAC}
t_{ACC}
t_{CAC}
t_{ACD}
t_{CRQ}
t_{CRQ}

M8755A
16,384-BIT EPROM WITH I/O

*Directly Compatible with M8085A CPU.
MILITARY

- **Military Temperature Range: −55°C to +100°C**
- **2048 Words × 8 Bits**
- **Single +5V Power Supply (V_{CC})**
- **U.V. Erasable and Electrically Reprogrammable**
- **Internal Address Latch**
- **2 General Purpose 8-Bit I/O Ports**
- **Each I/O Port Line Individually Programmable as Input or Output**
- **Multiplexed Address and Data Bus**
- **40-Pin DIP**

The Intel® M8755A is an erasable and electrically reprogrammable ROM (EPROM) and I/O chip to be used in the MCS-85™ microcomputer system. The EPROM portion is organized as 2048 words by 8 bits.

The I/O portion consists of 2 general purpose I/O ports. Each I/O port has 8 port lines, and each I/O port line is individually programmable as input or output.

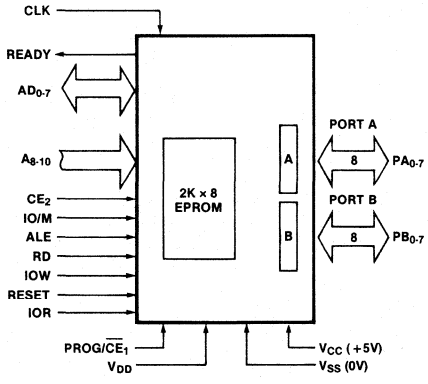

Figure 1. Block Diagram

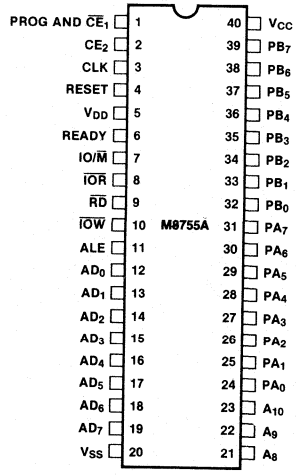

Figure 2. Pin Configuration

ABSOLUTE MAXIMUM RATINGS*

Temperature Under Bias ..... −55°C to +100°C
Storage Temperature ..... −65°C to +150°C
Voltage on Any Pin
With Respect to Ground ..... −0.5V to +7V
Power Dissipation 1.5W
*Except for programming voltage

**NOTICE: Stresses above those listed under "Absolute Maximum Ratings" may cause permanent damage to the device. This is a stress rating only and functional operation of the device at these or any other conditions above those indicated in the operational sections of this specification is not implied. Exposure to absolute maximum rating conditions for extended periods may affect device reliability.*

D.C. CHARACTERISTICS (T_A = −55°C to +100°C, V_{CC} = V_{DD} = ±10%)

Symbol	Parameter	Min.	Max.	Units	Test Conditions
V_{IL}	Input Low Voltage	−0.5	0.7	V	
V_{IH}	Input High Voltage	2.2	V_{CC} + 0.5	V	
V_{OL}	Output Low Voltage		0.45	V	I_{OL} = 1.6 mA
V_{OH}	Output High Voltage	2.4		V	I_{OH} = −400 μA
I_{IL}	Input Leakage		10	μA	$V_{SS} \leq V_{IN} \leq V_{CC}$
I_{LO}	Output Leakage Current		±10	μA	V_{SS} + 0.45V ≤ $V_{OUT} \leq V_{CC}$
I_{CC}	V_{CC} Supply Current		220	mA	
I_{DD}	V_{DD} Supply Current		30	mA	$V_{DD} = V_{CC}$
C_{IN}	Input Capacitance		10	pF	f = 1 MHz
$C_{I/O}$	Input/Output Capacitance		15	pF	f = 1 MHz

A.C. CHARACTERISTICS (T_A = −55°C to 100°C, V_{CC} = V_{DD} = ±10%)

Symbol	Parameter	Min.	Max.	Units	Test Conditions
t_{CYC}	Clock Cycle Time	320		ns	C_{LOAD} = 150 pF
T_1	CLK Pulse Width	80		ns	
T_2	CLK Pulse Width	120		ns	
t_f, t_r	CLK Rise and Fall Time		30	ns	
t_{AL}	Address to Latch Set Up Time	70		ns	
t_{LA}	Address Hold Time after Latch	100		ns	
t_{LC}	Latch to READ/WRITE Control	130		ns	
t_{RD}	Valid Data Out Delay from READ Control		200*	ns	
t_{AD}	Address Stable to Data Out Valid		500	ns	
t_{LL}	Latch Enable Width	140		ns	
t_{RDF}	Data Bus Float after READ	0	100	ns	
t_{CL}	READ/WRITE Control to Latch Enable	50		ns	
t_{CC}	READ/WRITE Control Width	300		ns	
t_{DW}	Data In to WRITE Set Up Time	200		ns	
t_{WD}	Data In Hold Time After WRITE	100		ns	
t_{WP}	WRITE to Port Output		400	ns	
t_{PR}	Port Input Set Up Time	70		ns	
t_{RP}	Port Input Hold Time	70		ns	
t_{RYH}	READY HOLD TIME	10	160	ns	
t_{ARY}	ADDRESS (CE) to READY		220	ns	
t_{RV}	Recovery Time Between Controls	400		ns	
t_{RDE}	Data Out Delay from READ Control	20		ns	
t_{LD}	ALE to Data Out Valid		400	ns	Preliminary

* T_{AD}—(T_{AL} + T_{LC}), whichever is greater.

A.C. TESTING INPUT, OUTPUT WAVEFORM

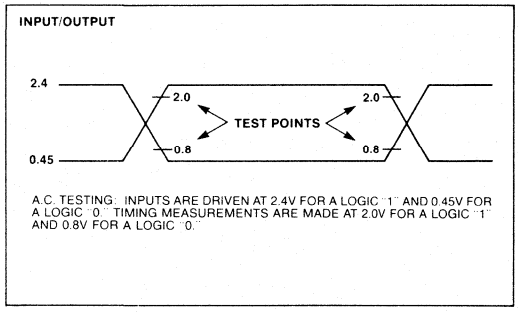

A.C. TESTING LOAD CIRCUIT

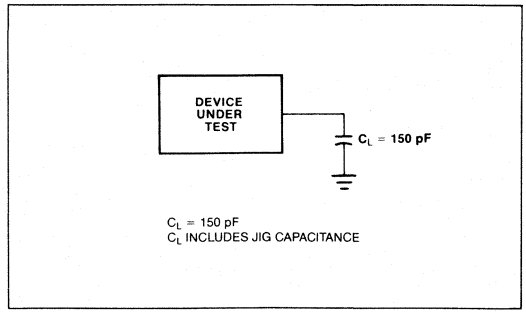

Quality Assurance

13

QUALITY ASSURANCE OPERATIONS

QUALITY ASSURANCE OPERATIONS, CORPORATE POLICY

"It is the policy of Intel Corporation to design, manufacture, and deliver products that not only meet our specified standards, but also satisfy our customer standards, and perform reliably in their applications. To this end, Quality Assurance at Intel has the authority to exercise control of quality over every phase of the design and manufacturing process."

Intel Quality Program Policy,
Intel (Corporate) Policies and Procedures.

QUALITY ASSURANCE, THE SCOPE OF THE OPERATION

By definition, quality is conformance to specification . . . process or procedure, mechanical or electrical, customer or Intel. The operation chartered to maintain that conformance is "Quality Assurance." Within this operation, departmental activities include the day-to-day surveillance of manufacturing and testing of product, and the longer-range considerations of process, package, and product reliability. Just as quality is "conformance to specification," reliability is "continual conformance to specification." The reliability departments, process, package and product, play key roles in maintaining Intel's high quality standards, by being involved from concept to on-going production monitors throughout the product life.

ORGANIZATION, A UNIQUE MATRIX

All product-related Q.A. organizations come under a uniform policy, while still maintaining the flexibility to service the specific needs of a product area. To perform in this manner, a unique matrix organization was developed. All quality and reliability functions report directly through Q.A. operations or site managers to the Director of Quality Assurance. The flexibility is obtained by the Q.A. managers associated with product areas (such as E-PROMs, memories, microcontrollers, microprocessors and peripheral circuits) also reporting indirectly to (i.e., matrixing to) the operation or division general manager.

Additionally, each product area has both a quality and reliability group under a single Q.A. manager. This involvement on a product-specific level provides both the customer and Intel with the timely response necessary to maintain a problem-free product flow. And when there are problems, they are handled quickly on a local level. This results in a "team" approach, quality, reliability, development, manufacturing—making state-of-the-art technology available in a usable form for our customers.

RELIABILITY, DESIGNED-IN AND BUILT ON EXPERIENCE

Intel's extensive reliability program forms the basis of the quality program. Whether process, package or product, the appropriate reliability department is part of the development cycle from concept. In this way, the finished product is based on the reliability history of millions of devices—built on experience. To illustrate this philosophy, since 1970, the first application of a new technology has always been on a memory chip. This type of chip provides a large-volume basis to establish a reliability data base for the technology. As part of the data base, the memory device is extensively analyzed for failure mechanisms and the process technology altered to eliminate them. From this data base, under the guidance of process reliability, design rules, test patterns, and process limits evolve. Only after completing qualification will the technology be utilized in another type of device; such as a microprocessor. And so the data base grows, with more complex devices advancing the technology, each succeeding device being potentially more reliable than the last, because the devices are built on experience, and the reliability is designed-in.

The key to establishing a new product, process or package, or to changing an existing one, is the rigid qualification requirements which must be met. Qualification must be run and approved by the appropriate reliability department before any revenue shipment may be made. The reliability goals have been set during the concept stage in keeping with corporate objectives and must be demonstrated by the qualification. Consider one example, the qualification of a new wafer fab technology for E-PROMs. Below is a list of tests the first 5 wafer lots see during qualification:

125°C burn-in	168 hours
125°C lifetest	2000 hours
150°C HTRB	1000 hours
Low-temperature lifetest	1000 hours
250°C storage	1000 hours
Temperature cycle	−65°C to +150°C
Thermal shock	−65°C to +150°C
Test pattern study	
Program/erase cycling	
System verification	

It is from this type of sequence that infant mortality, random failure rates, and associated failure mechanisms are determined. Also from this data, reliability reports are written and made available to our customers.

While successful completion of qualification is the key to product introduction, it would be meaningless if the device was not sampled throughout its product life. As has been shown, the use of generic technology families evaluates the process each time a new product is qualified. More than that, on a rotating product basis, 125°C dynamic burn-in and lifetests are performed to continuously monitor all technologies. Fifty thousand devices each month are allocated for the Reliability Monitor Program by the Components Division. In this manner, all generic technology families are continuously scrutinized to assure that reliability goals are met.

In the same manner, Intel Package Reliability performs an extensive package monitor program to assure the mechanical integrity of every package type produced by every assembly facility.

QUALITY, THE DEVICE MEETS SPECIFICATION

The reliability program has been shown to support components quality through design-in, qualification, and on-going monitors. This forms the basis of the quality philosophy of looking at product from its concept, and requiring succeeding and more complex technologies/products to perform at levels better than those previous. The quality operations supporting this philosophy start, as reliability does, by working with the design team in the product concept stage.

Quality must approve the Target Specification for any new device. Later, before qualification, test programs are validated as meeting the required limits and conditions to guarantee operation of the product to specification.

The checks and balances implemented during the process flow start with incoming inspection of piece parts, wafers, chemicals and masks. All must meet the standards determined to be commensurate with Intel's product quality and reliability goals. The Materials Technology Laboratory plays a large support role in determining these standards, in some instances developing test methods where none exist to meet the complex control needs.

Throughout the entire process, an independent manufacturing group, Manufacturing Process Control, continuously monitors processes in wafer fabrication, assembly, die sort, burn-in and test areas. The group provides trend data and process auditing control on a day-to-day basis, involving quality and reliability groups when control problems are evident. In the case of wafer fabrication, the test methods and patterns used for process control by MPC have been designed by Process Reliability. In all areas, controls must be approved by Quality and Reliability.

Assembly Quality Assurance operates at all assembly sites instituting controls that guarantee product integrity irrespective of plant location. Consolidated trend data is published weekly, heading off potential problems by allowing effective concentration of engineering resources in a timely manner.

Final Quality Assurance (FQA) operates in each Test and Finish area to verify that Intel and customer requirements are met. Independent electrical sampling, external visual examination, and checking data requirements are some of the functions of this group.

Overlaying all areas is a network of calibration laboratories. Operating to Mil-Std-45662, the laboratory supports all operations by maintaining test and process equipment within their required tolerances. The group provides the baseline for all Intel measurements by both systems and bench-top equipment, assuring the validity of product shipments at the customer's location.

MAJOR PROGRAMS, CUSTOMER-ORIENTED TO PROVE AND IMPROVE QUALITY

Every area of quality and reliability at Intel has major programs which are customer-oriented. Several are detailed here to illustrate the manner in which Intel services the customer in the quality and reliability areas after the sale.

The Reliability Monitor Program, referred to in the "Reliability" section, is a burn-in and lifetest program which verifies that all of Intel's technologies are being controlled within specified reliability target goals. By utilizing a dynamic 125°C, 48-hour burn-in, "infant mortality" failure rates may be determined. A portion of these devices are continued to 1000 hours to determine random failure rates. This process technology-oriented data is now available to customers biannually to use instead of requiring product burn-in on a lot-by-lot basis.

There has been a need, that has grown with device complexity, for an Intel-customer correlation effort. This effort has resulted in the FACR (Failure Analysis Correlation Request) system within each division or operation. Operating through the Field Sales Engineers, the object of the program is to eliminate electrical test discrepancies between Intel and its customers in a timely manner. The system provides direct contact with a product-oriented Quality Engineer to eliminate test program or equipment discrepancies between the

customer and Intel without returning all product shipped. The success of the program may be measured by the numbers of lots that have been shipped to customers and been questioned and accepted after utilizing the FACR system. The obvious by-product of this system is to build customer confidence to the point where Intel's final test and FQA data becomes the customer's incoming inspection data.

The Military Quality Assurance program, operated out of the Phoenix site, attends to customers within the aerospace or military industry, or in some cases, to customers that have special documentation requirements. To perform in this product area, the Military Q.A. acts as an overlay on all sites and operations, defining the Q.A. program requirements in that particular area. The success of this program may be gauged by the acceptance of selected high-technology products by the Federal Government under Mil-M-38510, and the product processing areas certified by an agency of the Federal Government (see "Military Grade Products" for details). This department also performs process audits on a regular basis of applicable Intel manufacturing facilities to assure compliance to rigid military traceability and process requirements.

QUALITY ASSURANCE OPERATIONS FLOWCHART

The Quality Assurance Operations are involved in every phase of the Components Divisions. Activities vary from generating and validating design rules for a process technology to assuring the device count agrees with the Intel invoice in Plant Clearance. The following flowchart documents some of the major interactions of Quality and Reliability through the product lifecycle. Step-by-step inspection is not shown, but rather an overview of the entire cycle to illustrate the extent of Intel's commitment to provide the quality and reliability our customers have utilized since 1969.

QUALITY ASSURANCE OPERATIONS

PROCESS TECHNOLOGY

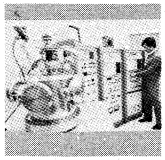

Reliability: Generate Design Rules
Generate Test Pattern
Process Qualification
Stress Testing
Failure Mode Analysis

PACKAGE TECHNOLOGY

Reliability: Process Qualification
Materials Test Methods
Materials Characterization

WAFER FABRIC

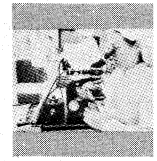

Quality: Incoming Inspect
High Magnificatic

Reliability: Process Qualifica
Process Control,
Analytical Test La

PRODUCT DESIGN

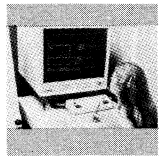

Quality: Parameter Limits, Testability
Test Program Control
Target Specification

PRODUCT VALIDATION/QUALIFICATION

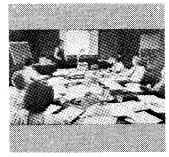

Design Engineering: Design Verification
Design Engineering: Performance Verification
Applications Engineering: System Verification
Quality/Reliability: Qualification

ASSEMBLY

Quality: Incoming Inspection Gates
High/Low Magnification Visual Gates

Assembly Q.A. Acceptance

External Visual	Open/Short Test
Fine/Gross Leak®	Bond Pull
Centrifuge	Die Shear
Acoustic (PIND)	X-Ray
Mark Permanency	Internal Visual

Reliability: Process Qualification
Assembly Monitor Program

:e

dation

ASSEMBLY MONITOR PROGRAM

External Visual	Internal Visual
Fine/Gross Leak®	Temperature Cycle
Lid Torque	Thermal Shock
Temp/Humidity℗	Steam
Moisture Resistance®	

TEST AND FINISH

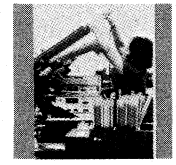

Quality: Final Q.A. Acceptance

Electrical Test Sample	Physical Dimensions
Solderability	External Visual
Mark Permanency	Conformance to Sales Order

Reliability: Reliability Monitor Program

RELIABILITY MONITOR PROGRAM

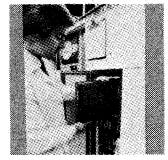

48 Hr, 125°C Dynamic Burn-In
1000 Hr, 125°C Dynamic Lifetest

NOTES:

® Hermetic packages, only.

℗ Plastic packages, only.

PLANT CLEARANCE

Quality: External Visual
Sales Order Requirements

General Information 14

ORDERING INFORMATION

Status Notices:

PRELIMINARY — Indicates some electrical parameters are subject to change.

ADVANCE INFORMATION — Indicates some functional characteristics are subject to change.

Semiconductor components are identified as follows:

Example:

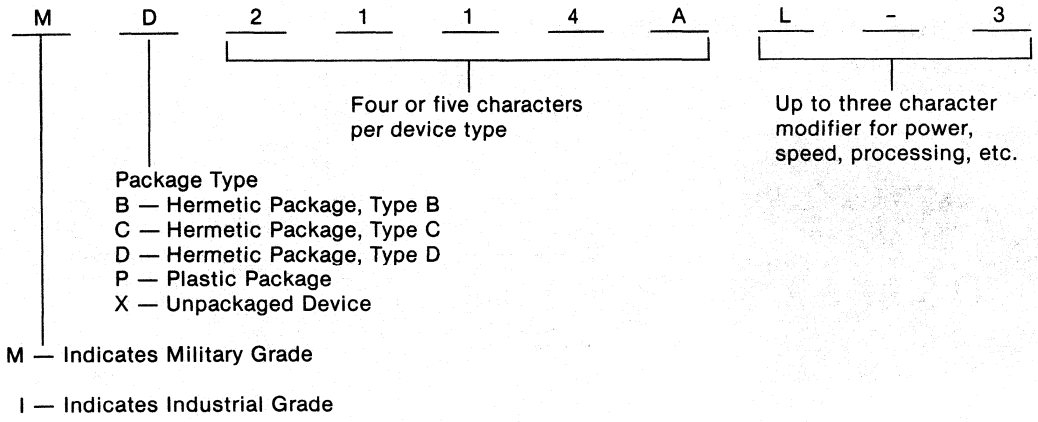

Examples:

D2147H-1	High-speed 2147, 4096 x 1 RAM with 35 ns access time, hermetic package Type D, commercial temperature range.
P8085A-2	8085A 8-bit microprocessor with 5 MHz clock, plastic package, commercial temperature range.
MD3636/B	2K x 8 PROM, hermetic package Type D, military temperature range, MIL-STD-883 Level B processing.*
MD8080A/B	8080A microprocessor, hermetic package Type D, military temperature range, MIL-STD-883 Level B processing.*

Kits, boards and systems may be ordered using the part number designations in this catalog.

The latest Intel OEM price book should be consulted for availability of various options. These may be obtained from your local Intel representative or by writing directly to Intel Corporation, 3065 Bowers Avenue, Santa Clara, California 95051.

**For Military products, MIL-STD-883 Level B processing is indicated by a /B suffix; all others should be specified by the "s" number suffix.*

NOTES:
1. All packages drawings not to scale.
2. All packages seating plane defined by .0415 to .0430 PCB holes.
3. Type P packages only. Package length does not include end flash burr. Burr is .005 nominal, can be .010 max. at one end.
4. All package drawings end view dimensions are to outside of leads.

PLASTIC DUAL IN-LINE PACKAGE TYPE P

16-LEAD PLASTIC DUAL IN-LINE PACKAGE TYPE P

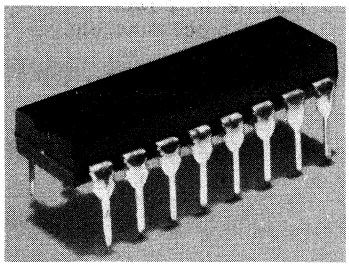

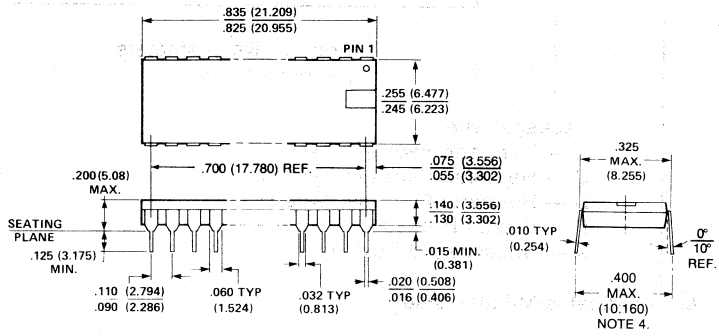

18-LEAD PLASTIC DUAL IN-LINE PACKAGE TYPE P

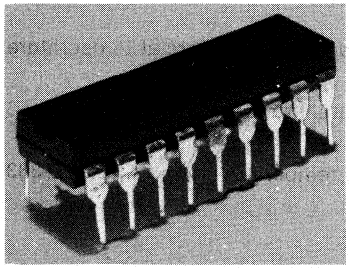

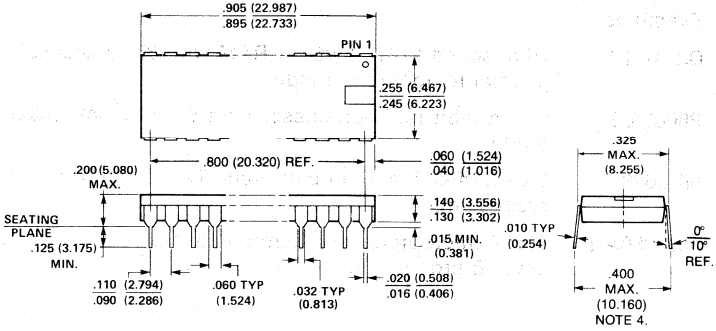

20-LEAD PLASTIC DUAL IN-LINE PACKAGE TYPE P

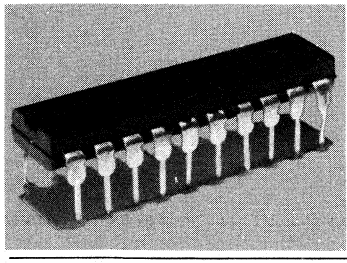

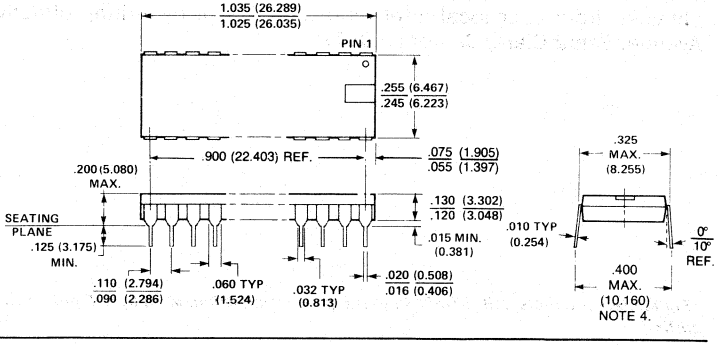

PLASTIC DUAL IN-LINE PACKAGE TYPE P

22-LEAD PLASTIC DUAL IN-LINE PACKAGE TYPE P

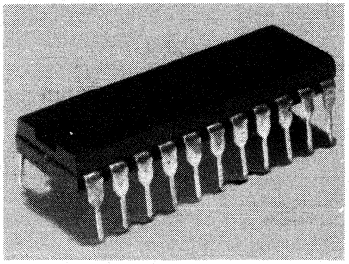

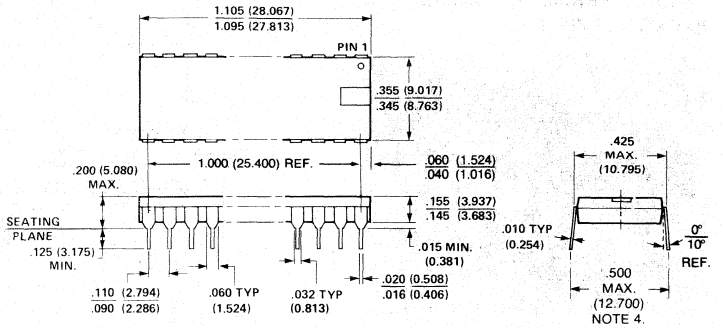

24-LEAD PLASTIC DUAL IN-LINE PACKAGE TYPE P

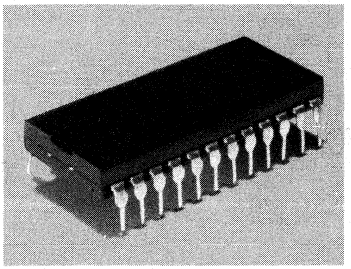

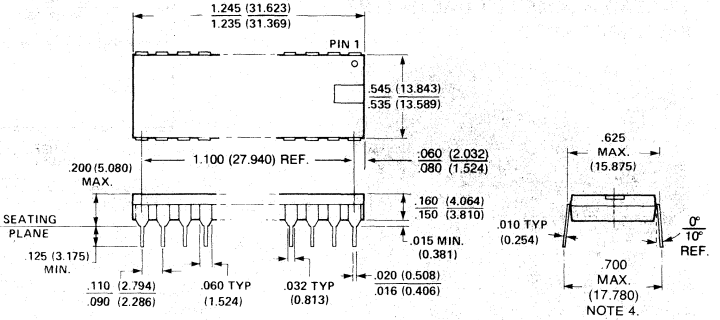

28-LEAD PLASTIC DUAL IN-LINE PACKAGE TYPE P

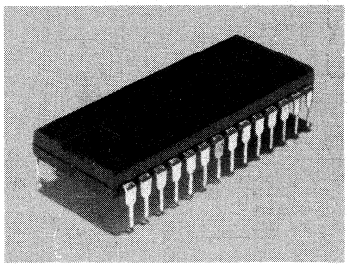

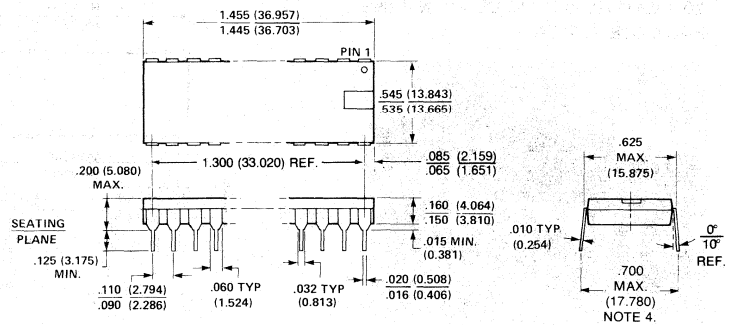

40-LEAD PLASTIC DUAL IN-LINE PACKAGE TYPE P

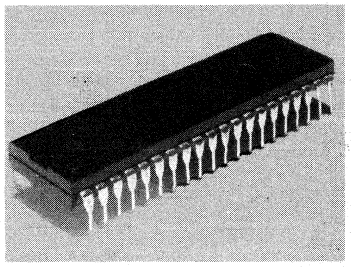

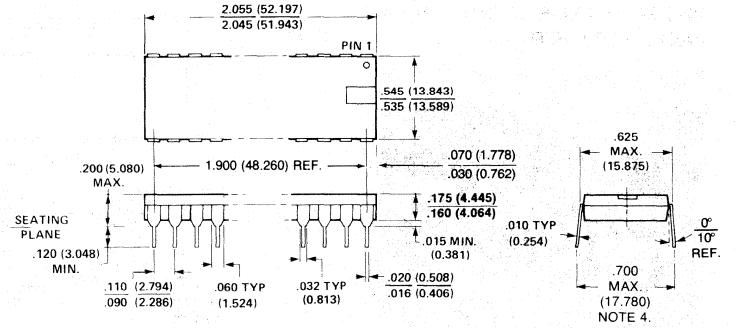

CERAMIC DUAL IN-LINE PACKAGE TYPE D

16-LEAD HERMETIC DUAL IN-LINE PACKAGE TYPE D

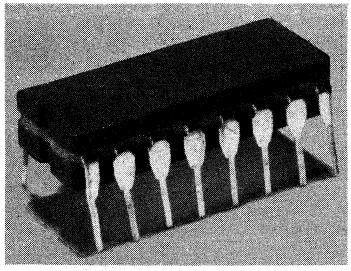

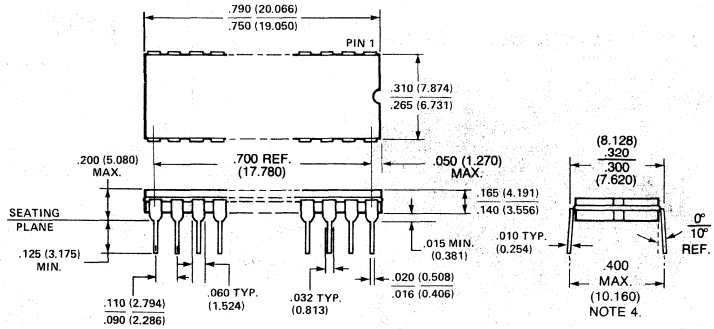

18-LEAD HERMETIC DUAL IN-LINE PACKAGE TYPE D

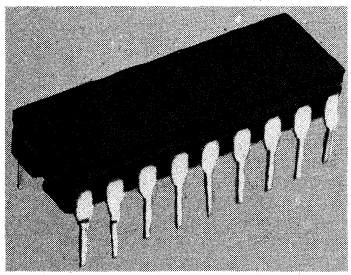

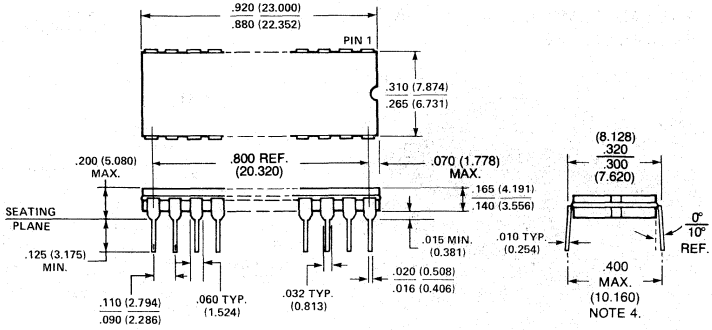

20-LEAD HERMETIC DUAL IN-LINE PACKAGE TYPE D

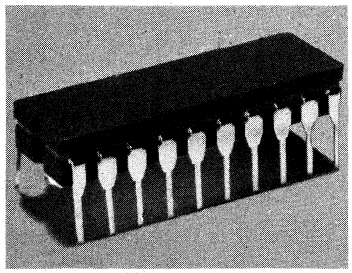

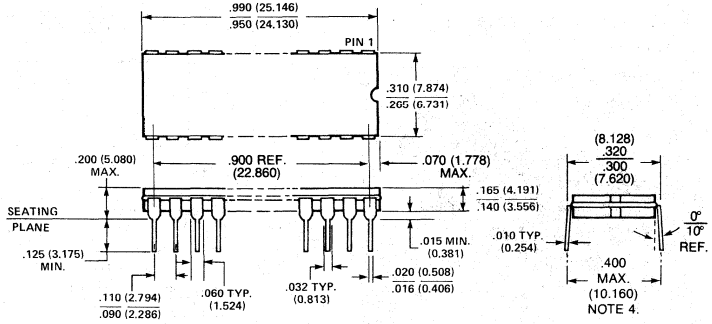

22-LEAD HERMETIC DUAL IN-LINE PACKAGE TYPE D

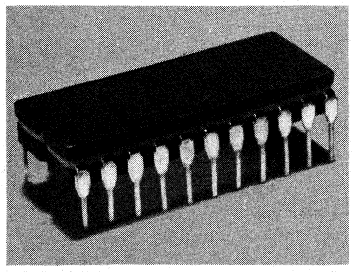

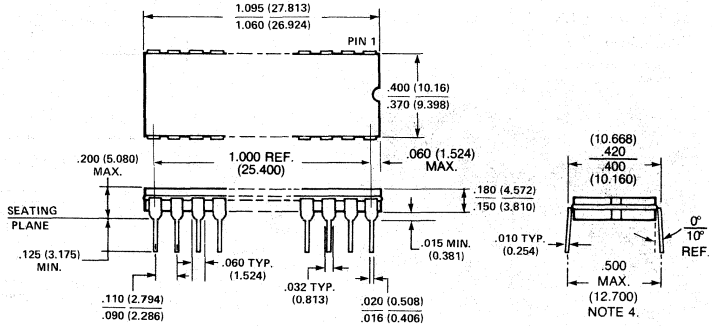

CERAMIC DUAL IN-LINE PACKAGE TYPE D

24-LEAD HERMETIC DUAL IN-LINE PACKAGE TYPE D

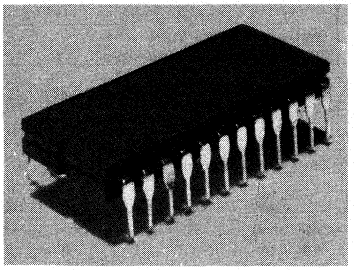

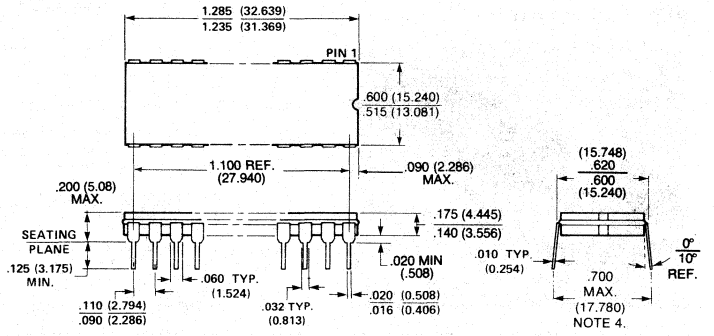

24-LEAD HERMETIC DUAL IN-LINE PACKAGE TYPE D

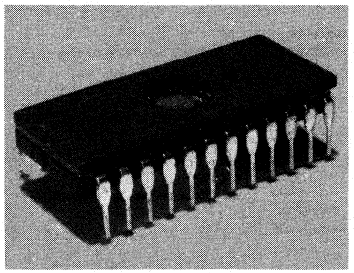

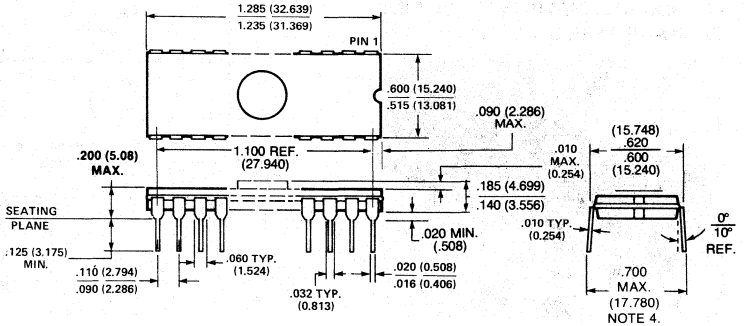

28-LEAD HERMETIC DUAL IN-LINE PACKAGE TYPE D

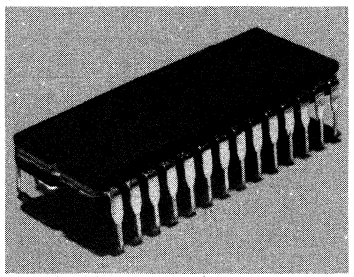

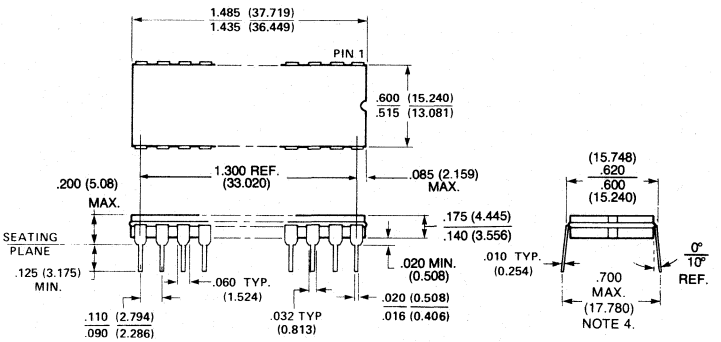

28-LEAD HERMETIC DUAL IN-LINE PACKAGE TYPE D

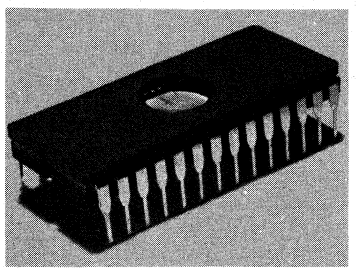

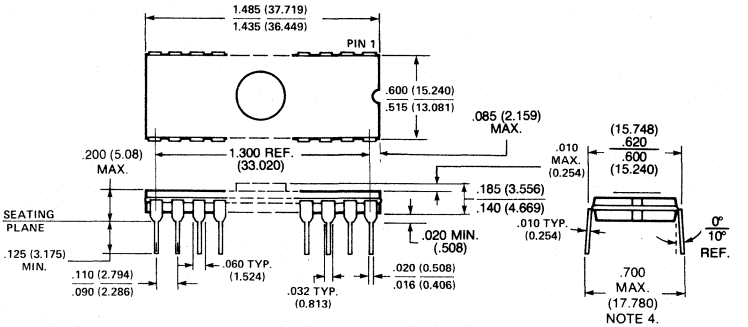

CERAMIC DUAL IN-LINE PACKAGE TYPE D

40-LEAD HERMETIC DUAL IN-LINE PACKAGE TYPE D

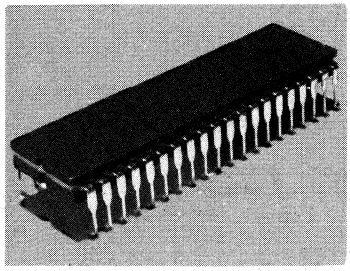

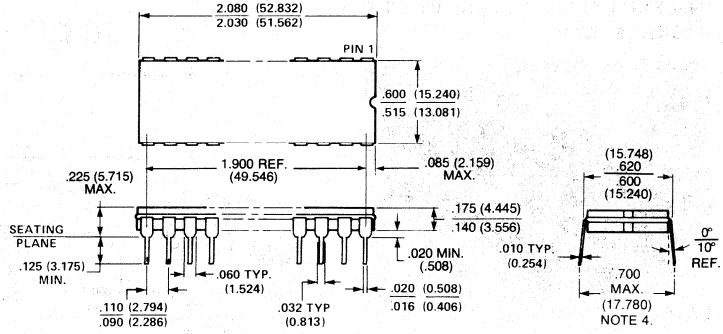

40-LEAD HERMETIC DUAL IN-LINE PACKAGE TYPE D

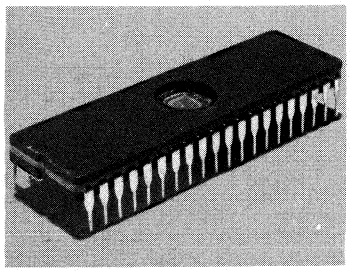

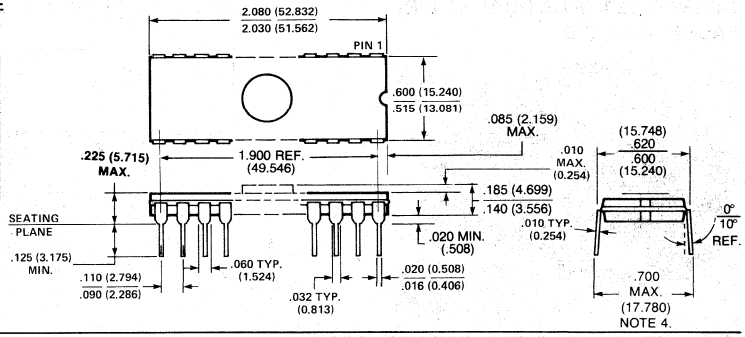

CERAMIC DUAL IN-LINE PACKAGE TYPE C

16-LEAD CERAMIC DUAL IN-LINE PACKAGE TYPE C

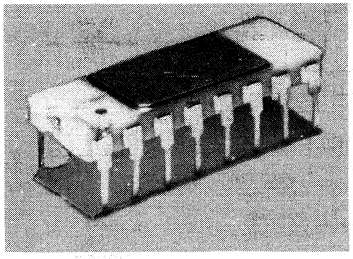

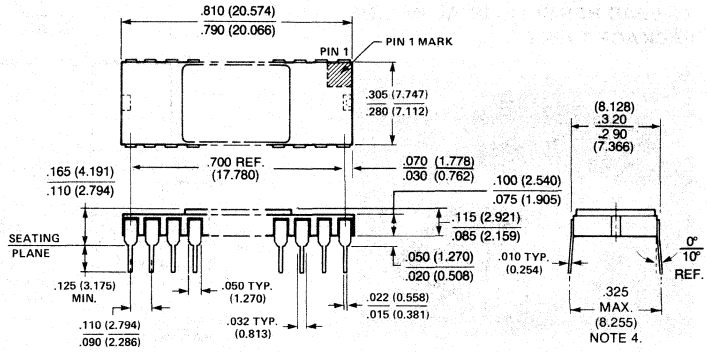

18-LEAD HERMETIC DUAL IN-LINE PACKAGE TYPE C

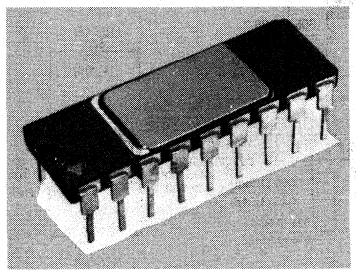

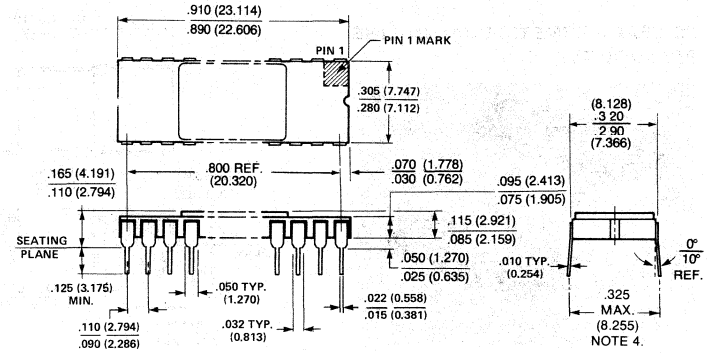

20-LEAD HERMETIC DUAL IN-LINE PACKAGE TYPE C

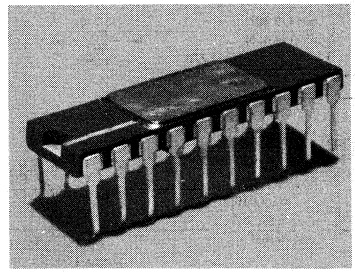

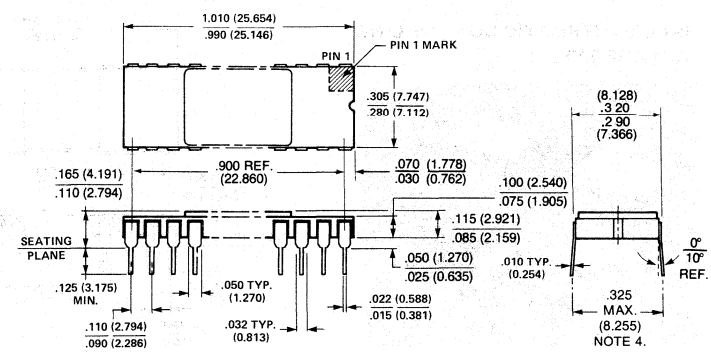

CERAMIC DUAL IN-LINE PACKAGE TYPE C

24-LEAD HERMETIC DUAL IN-LINE PACKAGE TYPE C

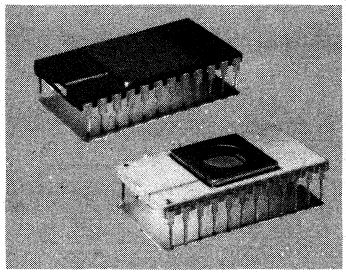

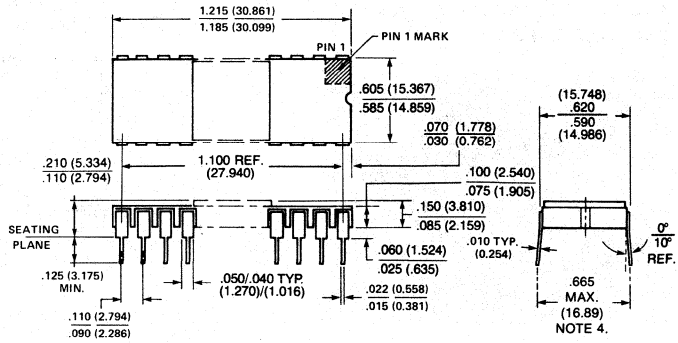

28-LEAD HERMETIC DUAL IN-LINE PACKAGE TYPE C

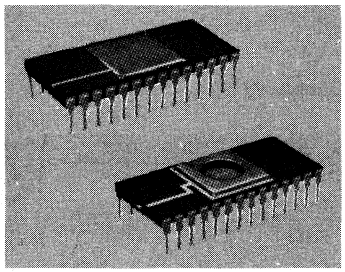

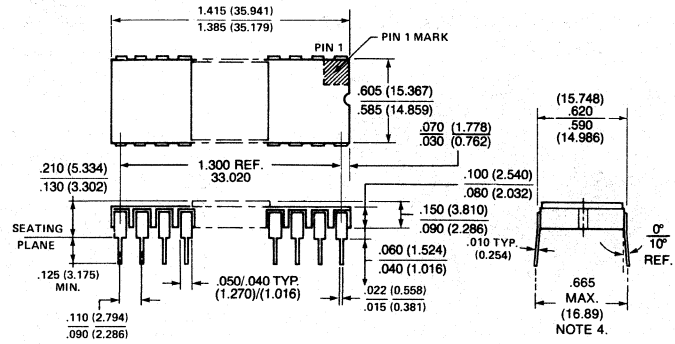

40-LEAD HERMETIC DUAL IN-LINE PACKAGE TYPE C

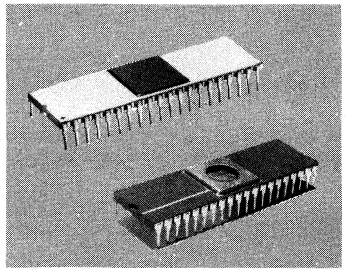

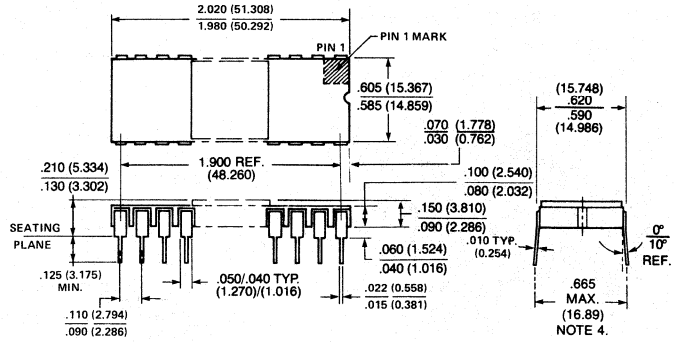

CERAMIC DUAL IN-LINE PACKAGE TYPE B

24-LEAD HERMETIC DUAL IN-LINE PACKAGE TYPE B

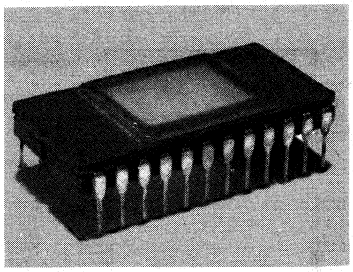

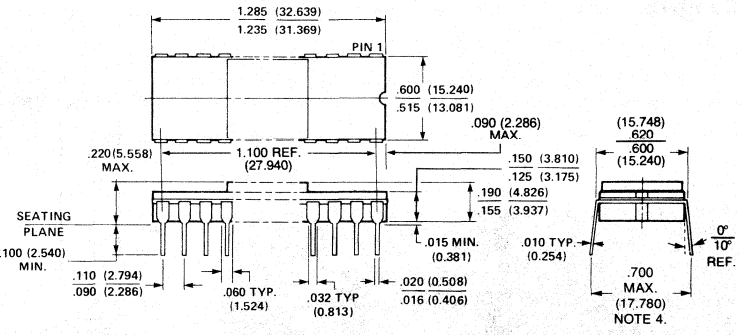

CERAMIC LEADLESS QUAD IN-LINE HERMETIC TYPE C

64 PINS–REQUIRES A SOCKET

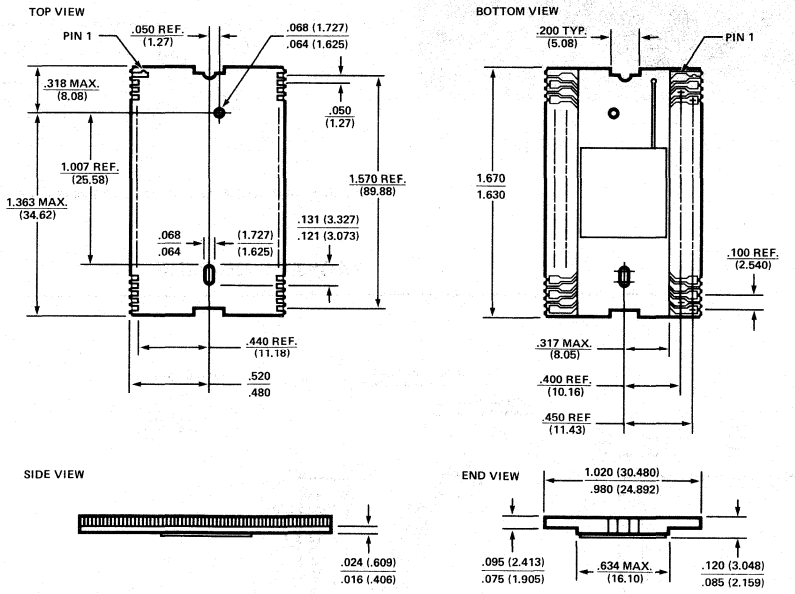

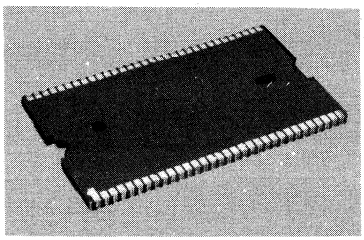

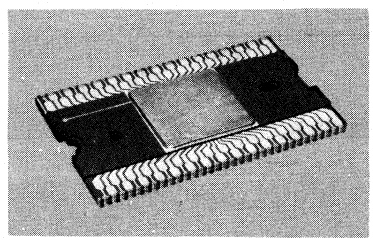

DUAL IN-LINE LEADLESS PACKAGE AND SOCKET
20 PINS

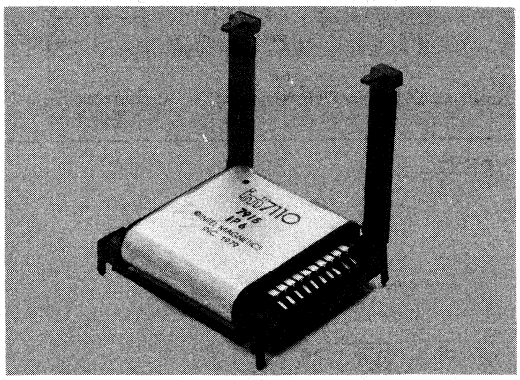

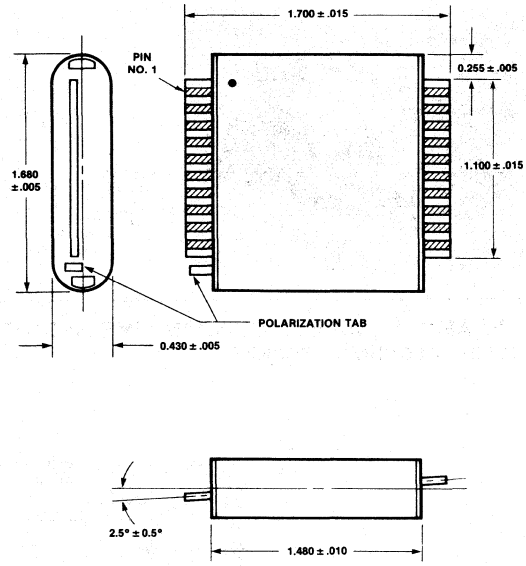

WEIGHT: 74 GRAMS NOMINAL, 80 GRAMS MAXIMUM

PACKAGE OUTLINE

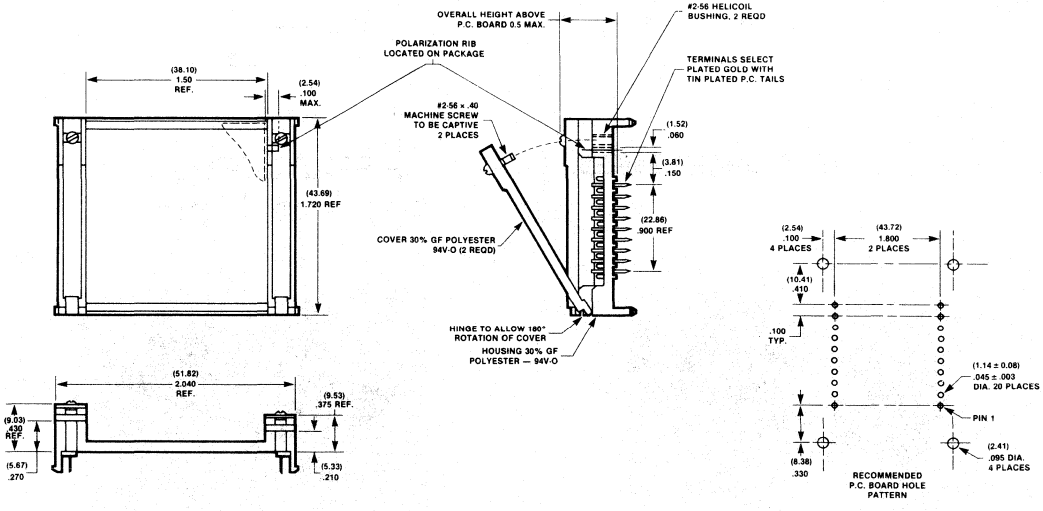

SOCKET OUTLINE

intel® Microcomputer Workshops

1982

The best microcomputer training

you can get your hands on.

Which Workshop Should You Attend?

Which Workshop Should You Attend?

If you have sufficient working experience with microcomputer hardware and software you might attend any of the Intel Workshops without first attending a prerequisite workshop; however, since microcomputers are new to many people, we recommend the sequence indicated in the chart for those who want to advance their microcomputer education. Also note that the iAPX 432 related workshops are in a sequence of their own because the iAPX 432 is a completely new product. We do, however, recommend attending the Operating System Fundamentals Workshop prior to any of the iAPX 432 workshops.

As a DESIGN ENGINEER or SYSTEM ENGINEER with a good understanding of digital electronics, you might start with the MCS-48/49, MCS-51, MCS-80/85 or iAPX 86,88 System Design Workshops. If you lack the digital electronics background, start with the Introduction to Microcomputers Workshop.

As a PROGRAMMER, you may be ready to start with the PASCAL, or PL/M Workshops; however, if you intend to use assembly language the MCS-48/49, MCS-51, MCS-80/85, or iAPX 86,88 Workshops should be attended first. We suggest that you also consider the Introduction to Microcomputers Workshop to gain basic knowledge of digital electronics and machine language, since these topics are usually much more important to the microcomputer programmer.

Recommended Sequence of Workshops

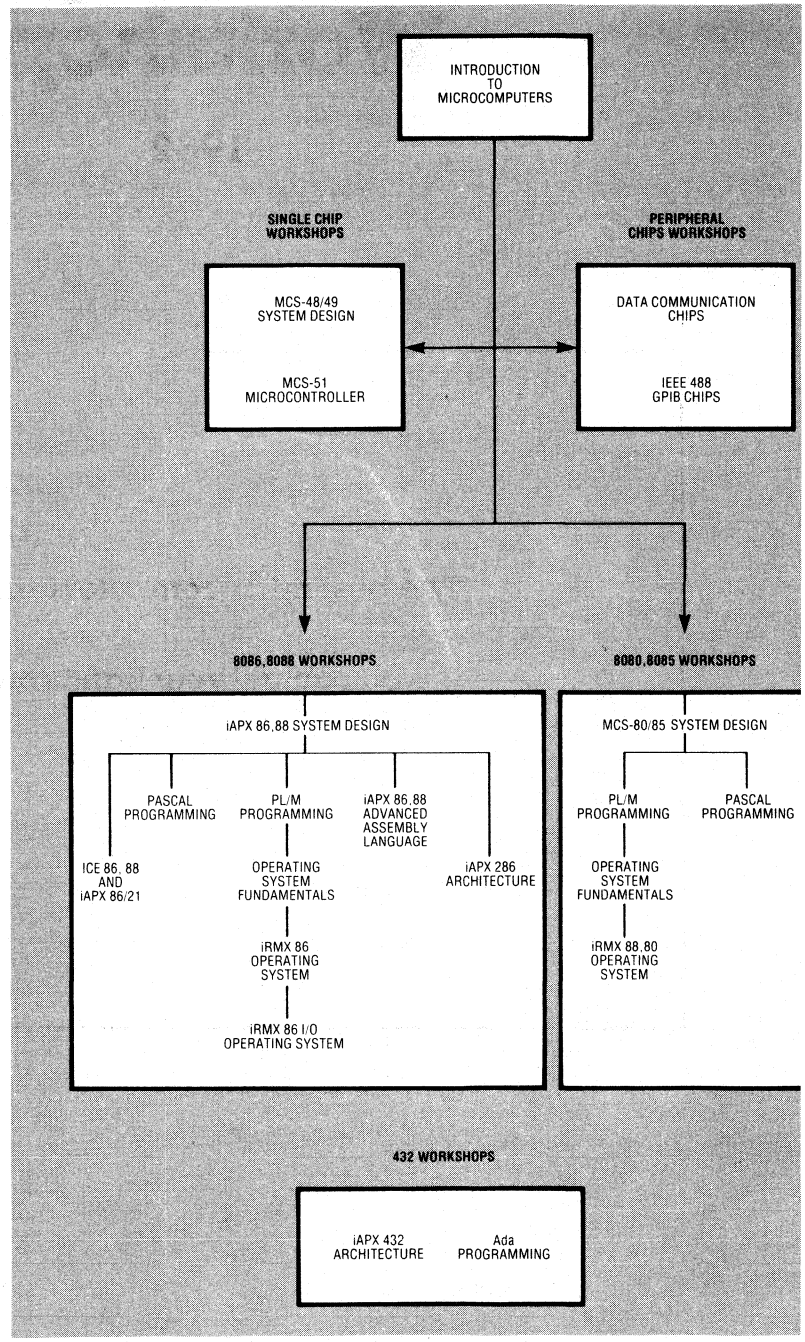

Where is Intel Training?

Intel Customer Training is a worldwide organization with workshops scheduled nearly every week of the year in our training centers:

BOSTON AREA
(617) 256-1374

CHICAGO AREA
(312) 981-7250

DALLAS AREA
(312) 981-7250

SAN FRANCISCO BAY AREA
(408) 734-8395

TOKYO AREA
03-437-6611

LONDON AREA
(0793) 26101

PARIS AREA
687 22 21

MUNICH AREA
(089) 53 891

STOCKHOLM AREA
08 98 53 90

CUSTOMER-SITE WORKSHOPS
All workshops detailed in the following pages can, by special arrangements, be presented by Intel instructors at your facility. We have outfitted vans with Intellec Development Systems and ICE In-Circuit Emulators so we can easily bring our extensive workshop lab equipment to your facility. Considering the transportation and lodging savings, the breakeven point is typically 5-7 attendees. For further information about on-site training contact your nearest training center.

Training in Microcomputers

Whether your present involvement with microcomputers is a result of long-term planning or simply an exploratory project undertaken by your company in response to external circumstances, there exists an obvious and urgent need for you to familiarize yourself with this exciting new technology. If the microcomputer is, or is destined to become, a part of your working scene then the importance of carefully planned training cannot be over-emphasized. A modest outlay in time and money now can save many weeks of self-study and could well prevent some very expensive mistakes during the initial development of your systems.

For further information and reservations call one of the numbers above or write to:

Intel Corporation
Customer Training Group

MS: SV 3-1
3065 Bowers Ave
Santa Clara, CA 95051

INTEL PRODUCT SERVICE

Today, it's essential to have dependable data processing and information storage equipment.

To insure trouble-free performance, every Intel product is engineered and manufactured to exacting standards. But sometimes, even the finest components may malfunction.

It's then that Intel Product Service delivers fast, economical, quality maintenance and service support to keep vital projects on schedule.

Intel is committed to providing a total service support package through a wide variety of service offerings available from Intel Product Service.

Intel Product Service takes pride in its capabilities and in the entire Intel systems product line, and is dedicated to total customer satisfaction.

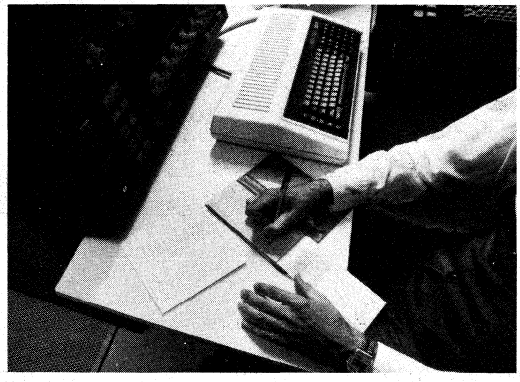

Customer Is Assured Maximum Equipment Performance

The Intel Product Service team is a skilled group capable of solving any problem, either by phone or on-site. All service needs (including emergency service and preventive maintenance) are handled quickly and efficiently by Intel's Customer Engineers, supported by district, regional and factory specialists.

This assures the customer of minimum downtime and maximum equipment performance.

Immediate Availability of Service and Parts

Working from field service offices throughout the United States, Canada and abroad, Intel's Customer Engineers provide maintenance agreement customers with equipment installation and regularly scheduled preventive maintenance, including automatic installation of engineering changes as they occur.

If there should be an equipment problem, customers contact the nearest Intel service location. If the customer location is within Intel's service area, an Intel Customer Engineer is dispatched to the site as quickly as possible. Once there, using advanced diagnostic tools and sophisticated test equipment, the Customer Engineer will determine the trouble and the replacement parts needed. With Intel's vast inventory of replacement parts, the right part is always available on the shortest notice, and the Customer Engineer is able to make repairs quickly and verify performance.

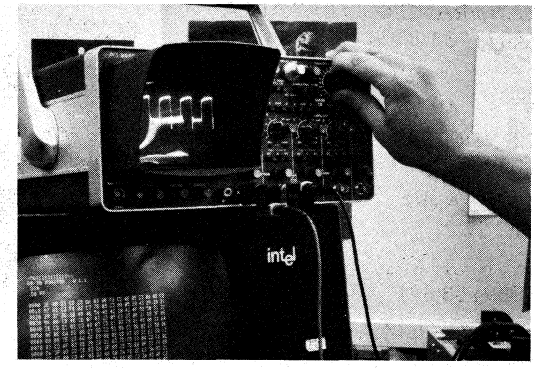

Product Service Alternatives

Intel offers customers a number of service alternatives . . . all at reasonable prices and featuring the quality expected of the industry leader.

First, there's the Maintenance Agreement, which guarantees maintenance at the customer's site plus parts replacement and labor at no extra charge beyond an easy-to-budget, fixed monthly rate -- all billed against one purchase order. The Maintenance Agreement features preventive maintenance which helps keep emergencies at a minimum. But should an emergency arise, a Customer Engineer is sent to the site immediately.

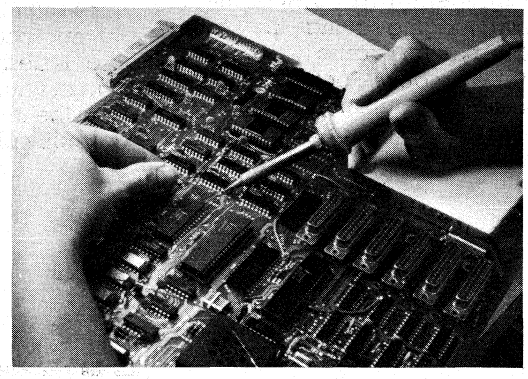

Of course Intel provides service for every system it sells. Thus, site service, parts replacement and repair are also available without a Maintenance Agreement. However, the site must be within a reasonable distance of an Intel field service location, and all charges are paid as they are incurred.

For customers not located in an Intel service area, or for those who prefer direct factory service, an Intel Direct Return Authorization "DRA" enables the customer to return parts direct to Intel for repair, refurbishing and upgrade services by its factory experts.

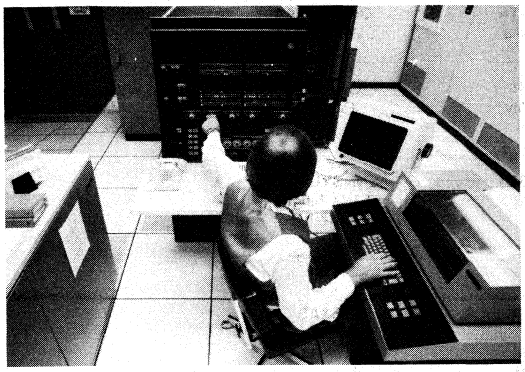

When distance from an Intel field location is too great, the Return Replacement Authorization "RRA" or the Before Return Replacement "BRR" services are the logical solutions for customers. (These services are not available on field-supported products in serviceable areas.)

The "RRA" service is the most cost-effective service. The customer calls the Hotline and obtains an RRA number and sends the boards in identified with this number. Replacement boards are shipped within 24 hours of receipt of the customer's boards. Replacement boards are in standard factory configuration and at the latest engineering level. Exchanged boards are not necessarily new but are functionally equivalent to new boards.

Where response is the primary concern and cost the secondary concern, the customer will find the "BRR" service to be the best answer. A call to the Intel Hotline puts the customer in direct contact with support specialists who can determine which part is needed to repair the system. The part is then sent immediately — before the return of the old part to Intel. Boards sent to the customer are not necessarily new but are functionally equivalent to new boards.

Toll-Free Service Hotline

In the United States, Intel's toll-free service Hotline is a direct connection to service support specialists who can help immediately.

If on-site service is available, they direct the customer to the nearest Intel field service location. If not, Hotline specialists can usually help locate the trouble . . . and indicate how to make the necessary repairs.

Whichever service alternative is chosen, the customer is assured fast, affordable service. Intel offers customers the total service they need -- that is one of the most important benefits of buying Intel products.

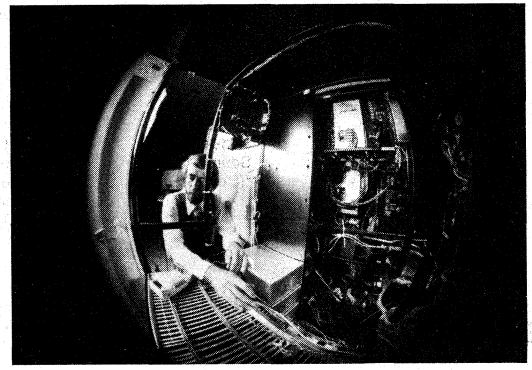

intel

3065 Bowers Avenue
Santa Clara, California 95051
Tel: (408) 987-8080
TWX: 910-338-0026
TELEX: 34-6372

PRODUCT SERVICE OFFICES

FACTORY SERVICES

FOR DRA, RRA, OR BRR SERVICES ONLY, CALL INTEL'S TOLL-FREE HOT-LINE NUMBER 800-528-0595

UNITED STATES

CENTRAL CONTACT: PHOENIX, AZ 602-869-4525

ALABAMA
Huntsville

ARIZONA
Phoenix

CALIFORNIA
Sacramento
San Diego
Santa Ana
Santa Clara
Sherman Oaks

COLORADO
Denver

CONNECTICUT
Danbury
Hartford

FLORIDA
Ft. Lauderdale
Jacksonville
Orlando
Miami
St. Petersburg

GEORGIA
Atlanta

ILLINOIS
Rockford
Rolling Meadows
(Chicago)

INDIANA
Indianapolis

MARYLAND
Hanover
(Baltimore)

MASSACHUSETTS
Chelmsford
(Boston)

MICHIGAN
Southfield
(Detroit)

MINNESOTA
Minneapolis

MISSOURI
Kansas City
St. Louis

NEW JERSEY
Fort Lee

NEW YORK
New York City
Rochester
Syracuse

NORTH CAROLINA
Greensboro

OHIO
Cincinnati
Cleveland
Columbus
Dayton

OKLAHOMA
Oklahoma City
Tulsa

OREGON
Portland

PENNSYLVANIA
Ft. Washington
(Philadelphia)
Harrisburg
Pittsburgh

TEXAS
Austin
Dallas
Houston
San Antonio

VIRGINIA
Roanoke

WASHINGTON
Seattle

WASHINGTON, D.C.

WISCONSIN
Madison
Milwaukee

EUROPE

CENTRAL CONTACT: SWINDON 011-44-793-26101

FRANCE
Paris

GERMANY
Munich
Hanover
Dusseldorf

HOLLAND
Rotterdam

SCANDANAVIA
Copenhagen
Oslo
Stockholm

U.K.
London
Swindon
Ipswich

JAPAN

CENTRAL CONTACT: TOKYO 011-81-3-427-756

CHOFU

MISHIMA

NAGOYA

OSAKA

SETAGOYA (Tokyo)

U.S. SALES OFFICES

3065 Bowers Avenue
Santa Clara, California 95051
Tel: (408) 987-8080
TWX: 910-338-0026
TELEX: 34-6372

ALABAMA

Intel Corp.
303 Williams Avenue, S.W.
Suite 1422
Huntsville 35801
Tel: (205) 533-9353

ARIZONA

Intel Corp.
10210 N. 25th Avenue, Suite 11
Phoenix 85021
Tel: (602) 869-4980

CALIFORNIA

Intel Corp.
7670 Opportunity Rd.
Suite 135
San Diego 92111
Tel: (714) 268-3563

Intel Corp.*
2000 East 4th Street
Suite 100
Santa Ana 92705
Tel: (714) 835-9642
TWX: 910-595-1114

Intel Corp.*
5530 Corbin Ave.
Suite 120
Tarzana 91356
Tel: (213) 708-0333
TWX: 910-495-2045

Intel Corp.*
3375 Scott Blvd.
Santa Clara 95051
Tel: (408) 987-8086
TWX: 910-339-9279
910-338-0255

Earle Associates, Inc.
4617 Ruffner Street
Suite 202
San Diego 92111
Tel: (714) 278-5441

Mac-I
2576 Shattuck Ave.
Suite 4B
Berkeley, CA 94704
(415) 843-7625

Mac-I
558 Valley Way
Calaveras Business Park
Milpitas 95035
Tel: (408) 946-8885

Mac-I
P.O. Box 8763
Fountain Valley 92708
Tel: (714) 839-3341

Mac-I
25 Village Parkway
Santa Monica 90409
Tel: (213) 452-7611

Mac-I
20121 Ventura Blvd., Suite 240E
Woodland Hills 91364
Tel: (213) 347-5900

COLORADO

Intel Corp.*
650 S. Cherry Street
Suite 720
Denver 80222
Tel: (303) 321-8086
TWX: 910-931-2289

CONNECTICUT

Intel Corp.
36 Padanaram Road
Danbury 06810
Tel: (203) 792-8366
TWX: 710-456-1199

EMC Corp.
48 Purnell Place
Manchester 06040
Tel: (203) 646-8085

FLORIDA

Intel Corp.
1500 N.W. 62nd Street, Suite 104
Ft. Lauderdale 33309
Tel: (305) 771-0600
TWX: 510-956-9407

Intel Corp.
500 N. Maitland, Suite 205
Maitland 32751
Tel: (305) 628-2393
TWX: 810-853-9219

GEORGIA

Intel Corp.
3300 Holcomb Bridge Rd.
Norcross 30092
Tel: (404) 449-0541

ILLINOIS

Intel Corp.*
2550 Golf Road, Suite 815
Rolling Meadows 60008
Tel: (312) 981-7200
TWX: 910-651-5881

INDIANA

Intel Corp.
9101 Wesleyan Road
Suite 204
Indianapolis 46268
Tel: (317) 875-0623

IOWA

Intel Corp.
St. Andrews Building
1930 St. Andrews Drive N.E.
Cedar Rapids 52402
Tel: (319) 393-5510

KANSAS

Intel Corp.
9393 W. 110th St., Ste. 265
Overland Park 66210
Tel: (913) 642-8080

MARYLAND

Intel Corp.*
7257 Parkway Drive
Hanover 21076
Tel: (301) 796-7500
TWX: 710-862-1944

MASSACHUSETTS

Intel Corp.*
27 Industrial Ave.
Chelmsford 01824
Tel: (617) 256-1800
TWX: 710-343-6333

EMC Corp.
381 Elliot Street
Newton 02164
Tel: (617) 244-4740
TWX: 922531

MICHIGAN

Intel Corp.*
26500 Northwestern Hwy.
Suite 401
Southfield 48075
Tel: (313) 353-0920
TWX: 810-244-4915

MINNESOTA

Intel Corp.
7401 Metro Blvd.
Suite 355
Edina 55435
Tel: (612) 835-6722
TWX: 910-576-2867

MISSOURI

Intel Corp.
502 Earth City Plaza
Suite 121
Earth City 63045
Tel: (314) 291-1990

NEW JERSEY

Intel Corp.*
Raritan Plaza
2nd Floor
Raritan Center
Edison 08837
Tel: (201) 225-3000
TWX: 710-480-6238

M. T. I.
383 Route 46 West
Fairfield, NJ 07006

NEW MEXICO

BFA Corporation
P.O. Box 1237
Las Cruces 88001
Tel: (505) 523-0601
TWX: 910-983-0543

BFA Corporation
3705 Westerfield, N.E.
Albuquerque 87111
Tel: (505) 292-1212
TWX: 910-989-1157

NEW YORK

Intel Corp.*
300 Motor Pkwy.
Hauppauge 11787
Tel: (516) 231-3300
TWX: 510-227-6236

Intel Corp.
80 Washington St.
Poughkeepsie 12601
Tel: (914) 473-2303
TWX: 510-248-0060

Intel Corp.*
2255 Lyell Avenue
Lower Floor East Suite
Rochester 14606
Tel: (716) 254-6120
TWX: 510-253-7391

T-Squared
4054 Newcourt Avenue
Syracuse 13206
Tel: (315) 463-8592
TWX: 710-541-0554

T-Squared
7353 Pittsburgh
Victor Road
Victor 14564
Tel: (716) 924-9101
TWX: 510-254-8542

NORTH CAROLINA

Intel Corp.
2306 W. Meadowview Rd.
Suite 206
Greensboro 27407
Tel: (919) 294-1541

OHIO

Intel Corp.*
6500 Poe Avenue
Dayton 45414
Tel: (513) 890-5350
TWX: 810-450-2528

Intel Corp.*
Chagrin-Brainard Bldg., No. 300
28001 Chagrin Blvd.
Cleveland 44122
Tel: (216) 464-2736
TWX: 810-427-9298

OREGON

Intel Corp.
10700 S.W. Beaverton
Hilladale Highway
Suite 324
Beaverton 97005
Tel: (503) 641-8086
TWX: 910-467-8741

PENNSYLVANIA

Intel Corp.*
510 Pennsylvania Avenue
Fort Washington 19034
Tel: (215) 641-1000
TWX: 510-661-2077

Intel Corp.*
201 Penn Center Boulevard
Suite 301W
Pittsburgh 15235
Tel: (412) 823-4970

Q.E.D. Electronics
300 N. York Road
Hatboro 19040
Tel: (215) 674-9600

TEXAS

Intel Corp.*
12300 Ford Rd.
Suite 380
Dallas 75234
Tel: (214) 241-9521
TWX: 910-860-5617

Intel Corp.*
6420 Richmond Ave.
Suite 280
Houston 77057
Tel: (713) 784-3400
TWX: 910-881-2490

Industrial Digital Systems Corp.
5925 Sovereign
Suite 101
Houston 77036
Tel: (713) 988-9421

Intel Corp.
313 E. Anderson Lane
Suite 314
Austin 78752
Tel: (512) 454-3628

UTAH

Intel Corp. (temporary)
3519 Lexington Dr.
Bountiful, UT 84010
Tel: (801) 292-2164

VIRGINIA

Intel Corp.
1501 Santa Rosa Road
Suite C-7
Richmond, VA 23288
Tel: (804) 282-5668

WASHINGTON

Intel Corp.
Suite 114, Bldg. 3
1603 116th Ave. N.E.
Bellevue 98005
Tel: (206) 453-8086
TWX: 910-443-3002

WISCONSIN

Intel Corp.
150 S. Sunnyslope Rd.
Brookfield 53005
Tel: (414) 784-9060

*Field Application Location

U.S. DISTRIBUTORS

3065 Bowers Avenue
Santa Clara, California 95051
Tel: (408) 987-8080
TWX: 910-338-0026
TELEX: 34-6372

ALABAMA

Arrow Electronics
4717 University Dr.
Suite 102 1/2 D.
Huntsville 35405
Tel: (205) 830-1103

†Hamilton/Avnet Electronics
4812 Commercial Drive N.W.
Huntsville 35805
Tel: (205) 837-7210
TWX: 810-726-2162

†Pioneer/Huntsville
1207 Putnam Drive N.W.
Huntsville 35805
Tel: (205) 837-9300
TWX: 810-726-2197

ARIZONA

†Hamilton/Avnet Electronics
505 S. Madison Drive
Tempe, AZ 85281
Tel: (602) 231-5140
TWX: 910-950-0077

†Wyle Distribution Group
8155 N. 24th Street
Phoenix 85021
Tel: (602) 249-2232
TWX: 910-951-4282

CALIFORNIA

Arrow Electronics, Inc.
521 Weddell Dr.
Sunnyvale 94086
Tel: (408) 745-6600
TWX: 910-339-9371

†Avnet Electronics
350 McCormick Avenue
Costa Mesa 92626
Tel: (714) 754-6051
TWX: 910-595-1928

Hamilton/Avnet Electronics
4942 Rosecrans
Hawthorne, CA 90250
Tel: (213) 558-2987

Hamilton/Avnet Electronics
1175 Bordeaux Dr.
Sunnyvale 94086
Tel: (408) 743-3300
TWX: 910-339-9332

†Hamilton/Avnet Electronics
4545 Viewridge Ave
San Diego 92123
Tel: (714) 563-1989
TWX: 910-335-1216

†Hamilton/Avnet Electronics
10912 W. Washington Blvd.
Culver City 90230
Tel: (213) 558-2193
TWX: 910-340-6364 or 7073

†Hamilton Electro Sales
3170 Pullman Street
Costa Mesa 92626
Tel: (714) 641-4109
TWX: 910-595-2638

†Wyle Distribution Group
124 Maryland Street
El Segundo 90245
Tel: (213) 322-8100
TWX: 910-348-7140 or 7111

†Wyle Distribution Group
9525 Chesapeake Dr.
San Diego 92123
Tel: (714) 565-9171
TWX: 910-335-1590

†Wyle Distribution Group
3000 Bowers Avenue
Santa Clara 95052
Tel: (408) 727-2500
TWX: 910-338-0451 or 0296

Wyle Distribution Group
17872 Cowan Avenue
Irvine 92713
Tel: (714) 641-1600
TWX: 910-595-1572

COLORADO

†Wyle Distribution Group
451 E 124th Avenue
Thornton, CO 80241
Tel: (303) 457-9953
TWX: 910-936-0770

†Hamilton/Avnet Electronics
8765 E. Orchard Road
Suite 708
Englewood 80111
Tel: (303) 740-1017
TWX: 910-935-0787

CONNECTICUT

†Arrow Electonics
12 Beaumont Road
Wallingford 06512
Tel: (203) 265-7741
TWX: 710-476-0162

†Hamilton/Avnet Electronics
Commerce Industrial Park
Commerce Drive
Danbury 06810
Tel: (203) 797-2800
TWX: 710-456-9974

†Harvey Electronics
112 Main Street
Norwalk 06851
Tel: (203) 853-1515
TWX: 710-468-3373

FLORIDA

†Arrow Electronics
1001 N.W. 62nd Street
Suite 108
Ft. Lauderdale 33309
Tel: (305) 776-7790
TWX: 510-955-9456

†Arrow Electronics
115 Palm Bay Road, N.W.
Suite 10, Bldg. 200
Palm Bay 32905
Tel: (305) 725-1480
TWX: 510-959-6337

†Hamilton/Avnet Electronics
8800 Northwest 20th Ave.
Ft. Lauderdale 33309
Tel: (305) 971-2900
TWX: 510-956-3097

Hamilton/Avnet Electronics
3197 Tech. Drive North
St. Petersburg 33702
Tel: (813) 576-3930
TWX: 810-863-0374

†Pioneer/Orlando
6220 S. Orange Blossom Trail
Suite 412
Orlando 32809
Tel: (305) 859-3600
TWX: 810-850-0177

GEORGIA

Arrow Electronics
2979 Pacific Drive
Norcross 30071
Tel: (404) 449-8252
TWX: 810-766-0439

†Hamilton/Avnet Electronics
5825 D. Peachtree Corners
Norcross 30092
Tel: (404) 447-7500
TWX: 810-766-0432

Pioneer/Georgia
5835 B Peachtree Corners E
Norcross 30092
Tel: (404) 448-1711
TWX: 810-766-4515

ILLINOIS

Arrow Electronics
492 Lunt Avenue
P.O. Box 94248
Schaumburg 60172
Tel: (312) 893-9420
TWX: 910-291-3544

†Hamilton/Avnet Electronics
3901 No. 25th Avenue
Schiller Park 60176
Tel: (312) 678-6310
TWX: 910-227-0060

Pioneer/Chicago
1551 Carmen Drive
Elk Grove 60007
Tel: (312) 437-9680
TWX: 910-222-1834

INDIANA

Arrow Electronics
2718 Rand Road
Indianapolis 46241
(317) 243-9353
TWX: 810-341-3119

†Hamilton/Avnet Electronics
485 Gradle Drive
Carmel 46032
Tel: (317) 844-9333
TWX: 810-260-3966

INDIANA (Cont.)

Pioneer/Indiana
6408 Castleplace Drive
Indianapolis 46250
Tel: (317) 849-7300
TWX: 810-260-1794

KANSAS

†Hamilton/Avnet Electronics
9219 Quivera Road
Overland Park 66215
Tel: (913) 888-8900
TWX: 910-743-0005

†Component Specialties, Inc.
8369 Nieman Road
Lenexa 66214
Tel: (913) 492-3555

MARYLAND

†Hamilton/Avnet Electronics
6822 Oak Hall Lane
Columbia, 21045
Tel: (301) 995-3500
TWX: 710-862-1861

Mesa
16021 Industrial Dr.
Gaithersburg 20877
Tel: (301) 948-4350

†Pioneer
9100 Gaither Road
Gaithersburg 20760
Tel: (301) 948-0710
TWX: 710-828-0545

MASSACHUSETTS

†Hamilton/Avnet Electronics
50 Tower Office Park
Woburn 01801
Tel: (617) 935-9700
TWX: 710-393-0382

†Arrow Electronics
Arrow Dr.
Woburn 01801
Tel: (617) 933-8130
TWX: 710-393-6770

Harvey/Boston
44 Hartwell Ave.
Lexington 02173
Tel: (617) 863-1200
TWX: 710-326-6617

MICHIGAN

†Arrow Electronics
3810 Varsity Drive
Ann Arbor 48104
Tel: (313) 971-8220
TWX: 810-223-6020

†Pioneer/Michigan
13485 Stamford
Livonia 48150
Tel: (313) 525-1800
TWX: 810-242-3271

†Hamilton/Avnet Electronics
32487 Schoolcraft Road
Livonia 48150
Tel: (313) 522-4700
TWX: 810-242-8775

MINNESOTA

†Arrow Electronics
5230 W. 73rd Street
Edina 55435
Tel: (612) 830-1800
TWX: 910-576-3125

†Industrial Components
5229 Edina Industrial Blvd.
Minneapolis 55435
Tel: (612) 831-2666
TWX: 910-576-3153

Hamilton/Avnet Electronics
10300 Bren Rd. East
Minnetonka 55343
Tel: (612) 932-0666
TWX: (910) 576-2720

†Hamilton/Avnet Electronics
7449 Cahill Road
Edina 55435
Tel: (612) 941-3801
TWX: 910-576-2720

MISSOURI

†Arrow Electronics
2380 Schuetz
St. Louis, MO 63141
Tel: (314) 567-6888

†Hamilton/Avnet Electronics
13743 Shorline Ct.
Earth City 63045
Tel: (314) 344-1200
TWX: 910-762-0684

NEW HAMPSHIRE

†Arrow Electronics
1 Perimeter Drive
Manchester 03103
Tel: (603) 668-6968
TWX: 710-220-1684

NEW JERSEY

†Arrow Electronics
Pleasant Valley Avenue
Moorestown 08057
Tel: (215) 928-1800
TWX: 710-897-0829

†Arrow Electronics
285 Midland Avenue
Saddle Brook 07662
Tel: (201) 797-5800
TWX: 710-998-2206

†Hamilton/Avnet Electronics
1 Keystone Ave.
Bldg. 36
Cherry Hill 08003
Tel: (609) 424-0100
TWX: 710-940-0262

Hamilton/Avnet Electronics
10 Industrial Road
Fairfield 07006
Tel: (201) 575-3390
TWX: 710-734-4388

†Harvey Electronics
45 Route 46
Pinebrook 07058
Tel: (201) 227-1262
TWX: 710-734-4382

Measurement Technology Sales Corp.
383 Route 46 W
Fairfield, NJ 07006
Tel: (201) 227-5552

NEW MEXICO

†Alliance Electronics Inc.
11030 Cochiti S.E.
Albuquerque 87123
Tel: (505) 292-3360
TWX: 910-989-1151

†Hamilton/Avnet Electronics
2524 Baylor Drive S.E.
Albuquerque 87119
Tel: (505) 765-1500
TWX: 910-989-0614

NEW YORK

†Arrow Electronics
900 Broad Hollow Rd.
Farmingdale, NY 11735
Tel: (516) 694-6800
TWX: 510-224-6494

†Arrow Electronics
3000 South Winton Road
Rochester 14623
Tel: (716) 275-0300
TWX: 510-253-4766

†Arrow Electronics
7705 Maltage Drive
Liverpool 13088
Tel: (315) 652-1000
TWX: 710-545-0230

Arrow Electronics
20 Oser Avenue
Hauppauge 11787
Tel: (516) 231-1000
TWX: 510-227-6623

†Hamilton/Avnet Electronics
333 Metro Park
Rochester 14623
Tel: (716) 475-9130
TWX: 510-253-5470

†Hamilton/Avnet Electronics
16 Corporate Circle
E. Syracuse 13057
Tel: (315) 437-2641
TWX: 710-541-1560

†Hamilton/Avnet Electronics
5 Hub Drive
Melville, Long Island 11746
Tel: (516) 454-6000
TWX: 510-224-6166

Harvey Electronics
P.O. Box 1208
Binghampton 13902
Tel: (607) 748-8211
TWX: 510-252-0893

†Microcomputer System Technical Demonstrator Centers

U.S. DISTRIBUTORS

3065 Bowers Avenue
Santa Clara, California 95051
Tel: (408) 987-8080
TWX: 910-338-0026
TELEX: 34-8372

NEW YORK (Cont.)

†Harvey Electronics
60 Crossways Park West
Woodbury, Long Island 11797
Tel: (516) 921-8920
TWX: 510-221-2184

Harvey/Rochester
840 Fairport Park
Fairport 14450
Tel: (716) 381-7070
TWX: 510-253-7001

Measurement Technology Sales Corp.
159 Northern Blvd.
Greatneck 11021
Tel: (516) 482-3500
TWX: 510-223-0846

NORTH CAROLINA

Arrow Electronics
938 Burke Street
Winston-Salem 27102
Tel: (919) 725-8711
TWX: 510-931-3169

†Hamilton/Avnet Electronics
2803 Industrial Drive
Raleigh 27609
Tel: (919) 829-8030
TWX: 510-928-1836

Pioneer/Carolina
106 Industrial Ave.
Greensboro 27406
Tel: (919) 273-4441
TWX: 510-925-1114

OHIO

Arrow Electronics
10 Knollcrest Dr.
Reading, OH 45237
Tel: (513) 761-5432
TWX: 810-461-2670

Arrow Electronics
7620 McEwen Road
Centerville 45459
Tel: (513) 435-5563
TWX: 810-459-1611

Arrow Electronics
6238 Cochran Rd.
Solon 44139
Tel: (216) 248-3990
TWX: 810-427-9409

†Hamilton/Avnet Electronics
954 Senate Drive
Dayton 45459
Tel: (513) 433-0610
TWX: 910-450-2531

†Hamilton/Avnet Electronics
4588 Emery Industrial Parkway
Warrensville Heights 44128
Tel: (216) 831-3500
TWX: 810-427-9452

†Pioneer/Dayton
4433 Interpoint Blvd.
Dayton 45424
Tel: (513) 236-9900
TWX: 810-459-1622

†Pioneer/Cleveland
4800 E. 131st Street
Cleveland 44105
Tel: (216) 587-3600
TWX: 810-422-2211

OKLAHOMA

†Components Specialties, Inc.
7920 E. 40th Street
Tulsa 74145
Tel: (918) 664-2820
TWX: 910-845-2215

OREGON

†Almac/Stroum Electronics
8022 S.W. Nimbus, Bldg. 7
Beaverton 97005
Tel: (503) 641-9070
TWX: 910-467-8743

†Hamilton/Avnet Electronics
6024 S.W. Jean Rd.
Bldg. C, Suite 10
Lake Oswego 97034
Tel: (503) 635-7848
TWX: 910-455-8179

PENNSYLVANIA

Arrow Electronics
650 Seco Rd.
Monroeville, PA 15146
Tel: (412) 856-7000

†Arrow Electronics
650 Seco Rd.
Monroeville 15146
Tel: (412) 856-7000

Pioneer/Pittsburgh
259 Kappa Drive
Pittsburgh 15238
Tel: (412) 782-2300
TWX: 710-795-3122

Pioneer/Delaware Valley
261 Gibralter Road
Horsham 19044
Tel: (215) 674-4000
TWX: 510-665-6778

TEXAS

Arrow Electronics
13715 Gama Road
Dallas 75234
Tel: (214) 386-7500
TWX: 910-860-5377

Arrow Electronics, Inc.
10700 Corporate Drive, Suite 100
Stafford 77477
Tel: (713) 491-4100
TWX: 910-880-4439

Component Specialties, Inc.
8222 Jamestown Drive
Suite 115
Austin 78758
Tel: (512) 837-8922
TWX: 910-874-1320

†Component Specialties, Inc.
10907 Shady Trail, Suite 101
Dallas 75220
Tel: (214) 357-6511
TWX: 910-861-4999

†Component Specialties, Inc.
8181 Commerce Park Drive, Suite 700
Houston 77036
Tel: (713) 771-7237
TWX: 910-881-2422

Hamilton/Avnet Electronics
10508A Boyer Blvd.
Austin 78757
Tel: (512) 837-8911
TWX: 910-874-1319

†Hamilton/Avnet Electronics
2111 W. Walnut Hill Lane
Irving 75062
Tel: (214) 659-4100
TWX: 910-860-5929

†Hamilton/Avnet Electronics
3939 Ann Arbor Drive
Houston 77063
Tel: (713) 780-1771
TWX: 910-881-5523

Pioneer/Austin
9901 Burnet Road
Austin, 78758
Tel: (512) 835-4000
TWX: 910-874-1323

UTAH

†Hamilton/Avnet Electronics
1585 West 2100 South
Salt Lake City 84119
Tel: (801) 972-2800
TWX: 910-925-4018

WASHINGTON

†Almac/Stroum Electronics
5811 Sixth Ave. South
Seattle 98108
Tel: (206) 763-2300
TWX: 910-444-2067

†Hamilton/Avnet Electronics
14212 N.E. 21st Street
Bellevue 98005
Tel: (206) 453-5844
TWX: 910-443-2469

†Wyle Distribution Group
1750 132nd Avenue N.E.
Bellevue 98005
Tel: (206) 453-8300
TWX: 910-443-2526

WISCONSIN

†Arrow Electronics
430 W. Rausson Avenue
Oakcreek 53154
Tel: (414) 764-6600
TWX: 910-262-1193

†Hamilton/Avnet Electronics
2975 Moorland Road
New Berlin 53151
Tel: (414) 784-4510
TWX: 910-262-1182

†Microcomputer System Technical Demonstrator Centers

INTERNATIONAL SALES AND MARKETING OFFICES

3065 Bowers Avenue
Santa Clara, California 95051
Tel: (408) 987-8080
TWX: 910-338-0026
TELEX: 34-6372

INTERNATIONAL DISTRIBUTORS/REPRESENTATIVES

AUSTRALIA

A.J.F. Systems & Components Pty. Ltd.
310 Queen Street
Melbourne
Victoria 3000
Tel: 679-702
TELEX: AA 31261

Warburton Franki
Corporate Headquarters
372 Eastern Valley Way
Chatswood, New South Wales 2067
Tel: 407-3261
TELEX: AA 21299

AUSTRIA

Bacher Elektronische Geraete GmbH
Rotenmulgasse 26
A 1120 Vienna
Tel: (222) 83 56 46
TELEX: 131532

Rekirsch Elektronik Geraete GmbH
Lichtensteinstrasse 9716
A 1090 Vienna
Tel: (222) 347646
TELEX: 134759

BELGIUM

Inelco Belgium S.A.
Ave. des Croix de Guerre 94
B1120 Brussels
Tel: (02) 216 01 60
TELEX: 25441

BRAZIL

Icotron S.A.
0511 Av. Mutinga 3650
6 Andar
Pirituba Sao Paulo
Tel: 261-0211
TELEX: 1122274/ICOTBR

CHILE

DIN
Av. Vic. MacKenna 204
Casilla 6055
Santiago
Tel: 227 564
TELEX: 3520003

CHINA

C.M. Technologies
525 University Avenue
Suite A-40
Palo Alto, CA 94301
Tel: (415) 326-9150

Schmidt & Co. Ltd.
Wing On Centre, 28th Floor
Connaught Road
Hong Kong
Tel: 011-852-5-455-644
TELEX: 74766 SCHMC HX

COLOMBIA

International Computer Machines
Carrera 7 No. 72-34
Apdo. Aereo 19403
Bogota 1
Tel: 211-7282
TELEX: 44495 TOYOCO

CYPRUS

Cyprus Eltrom Electronics
P.O. Box 5393
Nicosia
Tel: 21-27982

DENMARK

ITT Multi Komponent
Fabrysparken 31
DK-2600 Glostrup
Tel: (02) 45 66 45
TX; 33355

Scandinavian Semiconductor
Supply A/S
Nannasgade 18
DK-2200 Copenhagen
Tel: (01) 83 50 90
TELEX: 19037

FINLAND

Oy Fintronic AB
Melkonkatu 24 A
SF 00210
Helsinki 21
Tel: (0) 692 60 22
TELEX: 124 224 Ftron SF

FRANCE

Celdis S.A.*
53, Rue Charles Frerot
F-94250 Gentilly
Tel: (01) 546 13 13
TELEX: 200 485

Feutrier
Rue des Trois Glorieuses
F-42270 St. Priest-en-Jarez
Tel: 33 (77) 74 67 33
TELEX: 300 0 21

Metrologie*
La Tour d' Asnieres
1, Avenue Laurent Cely
92606-Asnieres
Tel: (1) 791 44 44
TELEX: 611 448

Tekelec Airtronic*
Cite des Bruyeres
Rue Carle Vernet
F-92310 Sevres
Tel: (01) 534 75 35
TELEX: 204552

GERMANY

Electronic 2000 Vertriebs GmbH
Neumarkter Strasse 75
D-8000 Munich 80
Tel: (89) 43 40 61
TELEX: 522561

Jermyn GmbH
Postfach 1180
Schulstrasse 48
D-6277 Camberg
Tel: (6343) 4231
TELEX: 484426

Kontron Elektronik GmbH
Breslauerstrasse 2
8057 Eching B
D-8000 Munich
Tel: (89) 319 011
TELEX: 522122

Neye Enatechnik GmbH
Schillerstrasse 14
D-2085 Quickborn-Hamburg
Tel: (4106) 6121
TELEX: 213590

GREECE

American Technical Enterprises
P.O. Box 156
Athens
Tel: 30-1-8811271
TX: 30-1-8219470

HONG KONG

Schmidt & Co.
Wing on Center, 28th Floor
Connaught Road
Hong Kong
Tel: 5-455-644
TELEX: 74766 Schmc Hx

INDIA

Micronic Devices
104/109C, Nirmal Industrial Estate
Sion (E)
Bombay 400022, India
Tel: 486-170
TELEX: 011-5947 MDEV IN

ISRAEL

Eastronics Ltd.*
11 Rozanis Street
P.O. Box 39300
Tel Aviv 61390
Tel: (3) 47 51 51
TELEX: 33638

ITALY

Eledra 3S S.P.A.*
Viale Elvezia, 18
I 20154 Milano
Tel: (2) 34 97 51
TELEX: 332332

JAPAN

Asahi Electronics Co. Ltd.
KMM Bldg. Room 407
2-14-1 Asano, Kokura
Kita-Ku, Kitakyushu City 802
Tel: (093) 511-6471
TELEX: AECKY 7126-16

Hamilton-Avnet Electronics Japan Ltd.
YU and YOU Bldg. 1-4 Horidome-Cho
Nihonbashi Chuo-Ku, Tokyo 103
Tel: (03) 662-9911
TELEX: 2523774

Ryoyo Electric Corp.
Konwa Bldg.
1-12-22, Tsukiji
Chuo-Ku, Tokyo 104
Tel: (03) 543-7711

Tokyo Electron Ltd.
Shin Juku, Nomura Bldg.
26-2 Nishi-Shin Juku-Ichome
Shin Juku-Ku, Tokyo 160
Tel. (03) 343-4411
TELEX: 232-2220 LABTEL J

KOREA

Koram Digital
Room 909 Woonam Bldg.
7, 1-KA Bongre-Dong
Chung-Ku Seoul
Tel: 238-123
TELEX: K23542 HANSINT

MEXICO

Proveedora Electronica, S.A. (Proesa)
Prol. Moctezuma Ote. 24
Col. Romero de Terreros
Apdo. Postal 21-139
Mexico 21, D.F.
Tel: 554-8300
TELEX: 017-72402 SAULME

NETHERLANDS

Inelco Nether. Comp. Sys. BV
Turfstekerstraat 63
P.O. Box 360
NL Aalsmeer 1430
Tel: (2977) 28855
TELEX: 14693

Koning & Hartman
Koperwerf 30
P.O. Box 43220
2544 EN's Gravenhage
Tel: 31 (70) 210.101
TELEX: 31528

NEW ZEALAND

McLean Information Technology Ltd.
P.O. Box 18-065
Glenn Innes, Auckland, 6
Tel: 587-037
TELEX: NZ2763 KOSFY

NORWAY

Nordisk Elektronic (Norge) A/S
Postoffice Box 122
Smedsvingen 4
1364 Hvalstad
Tel: (2) 786 210
TELEX: 16963

PORTUGAL

Ditram
Componentes E Electronica LDA
Av. Miguel Bombarda, 133
P1000 Lisboa
Tel: (19) 545 313
TELEX: 14182 Brieks-P

SINGAPORE

General Engineers Corporation Pte. Ltd.
Blk 3, Units 1003-1008, 10th Floor
P.S.A. Multi-Storey Complex
Pasir Panjang Road
Singapore 0511
Tel: 271-3163
TELEX: RS23987 GENERCO

SOUTH AFRICA

Electronic Building Elements
P.O. Box 4609
Hazelwood, Pretoria 0001
Tel: 011-27-12-46-9221
TELEX: 30181SA

SPAIN

Interface S.A.
Ronda San Pedro 22, 3*
Barcelona 10
Tel: (3) 301 78 51
TWX: 51508

ITT SESA
Miguel Angel 16-6
Madrid 10
Tel: (1) 410.23.54
TELEX: 27707/27461

SWEDEN

AB Gosta Backstrom
Box 12009
Alstraherçatan 22
S-10221 Stockholm 12
Tel: (8) 541 080
TELEX: 10135

Nordisk Electronik AB
Box 27301
S-10254 Stockholm
Tel: (8) 635 040
TELEX: 10547

SWITZERLAND

Industrade AG
Gemsenstrasse 2
Postcheck 80 - 21190
CH-8021 Zurich
Tel: (1) 363 22 30
TELEX: 56788

TAIWAN

Taiwan Automation Co.*
3d Floor #75, Section 4
Nanking East Road
Taipei
Tel: 771-0940
TELEX: 11942 TAIAUTO

TURKEY

Turkelek Electronics
Apapurk Boulevard 169
Ankara
Tel: 189483

UNITED KINGDOM

Comway Microsystems Ltd.
Market Street
UK-Bracknell, Berkshire
Tel: 44 (344) 51654
TELEX: 847201

M.E.D.L.
East Lane Road
North Wembley
Middlesex HA9 7PP
Tel: 44 (01) 904-9303/908-4111
TELEX: 28817

Jermyn Industries (Mogul)
Vestry Estate
Sevenoaks, Kent
Tel: (0732) 501.44
TELEX: 95142

Rapid Recall, Ltd.
Rapid House/Denmark St
High Wycombe
Bucks, England HP11 2ER
Tel: 44 494 26 271
TELEX: 849439

Bytech Ltd.
Sutton Park Avenue
Reading, Berkshire 61A2
Tel: (0734) 61 031
TELEX: 848215

*Field Application Location

INTERNATIONAL SALES AND MARKETING OFFICES

3065 Bowers Avenue
Santa Clara, California 95051
Tel: (408) 987-8080
TWX: 910-338-0026
TELEX: 34-6372

INTEL® MARKETING OFFICES

AUSTRALIA

Intel Semiconductor Pty. Ltd.
Suite 2, Level 15, North Point
100 Miller Street
North Sydney, NSW, 2060
Tel: 450-847
TELEX: AA 20097

BELGIUM

Intel Corporation S.A.
Rue du Moulin a Papier 51
Boite 1
B-1160 Brussels
Tel: (02) 660 30 10
TELEX: 24814

DENMARK

Intel Denmark A/S*
Lyngbyvej 32F 2nd Floor
DK-2100 Copenhagen East
Tel: (01) 18 20 00
TELEX: 19567

FINLAND

Intel Finland OY
Sentnerikuja 3
SF - 00400 Helsinki 40
Tel: (0) 56244 55
TELEX: 123 332

FRANCE

Intel Corporation, S.A.R.L.*
5 Place de la Balance
Silic 223
94528 Rungis Cedex
Tel: (01) 687 22 21
TELEX: 270475

GERMANY

Intel Semiconductor GmbH*
Seidlstrasse 27
D-8000 Muenchen 2
Tel: (89) 53891
TELEX: 523 177

Intel Semiconductor GmbH
Mainzer Strasse 75
D-6200 Wiesbaden 1
Tel: (6121) 70 08 74
TELEX: 04186183

Intel Semiconductor GmbH
Wernerstrasse 67
P.O. Box 1460
D-7012 Fellbach
Tel: (711) 58 00 82
TELEX: 7254826

Intel Semiconductor GmbH
Hohenzollern Strasse 5
3000 Hannover 1
Tel: (511) 32 70 81
TELEX: 923625

Intel Semiconductor GmbH
Vertriebsburo Dusseldorf
Ober-Ratherstrasse 2
4000 Dusseldorf 30
Tel: (211) 65 10 54
TELEX: 8586977

HONG KONG

Intel Semiconductor Ltd.
99-105 Des Voeux Rd., Central
18F, Unit B
Hong Kong
Tel: 5-450-847
TELEX: 63869

ISRAEL

Intel Semiconductor Ltd.*
P.O. Box 1659
Haifa
Tel: 4/524 261
TELEX: 46511

ITALY

Intel Corporation Italia Spa
Milanofiori, Palazzo E
20094 Assago (Milano)
Tel: (02) 824 00 06
TELEX: 315183 INTMIL

JAPAN

Intel Japan K.K.*
Flower Hill-Shinmachi East Bldg.
1-23-9 Shinmachi, Setagaya-ku
Tokyo 154
Tel: (03) 426-9261
TELEX: 781-28426

NETHERLANDS

Intel Semiconductor Nederland B.V.
Oranjestraat 1
3441 Ax Woerden
Netherlands
Tel: 31-3480-112-64
TELEX: 47970

Intel Semiconductor B.V.
Cometongebouw
Westblaak 106
3012 Km Rotterdam
Tel: (10) 149122
TELEX: 22283

NORWAY

Intel Norway A/S
P.O. Box 92
Hvamveien 4
N-2013
Skjetten
Tel: (2) 742 420
TELEX: 18018

SWEDEN

Intel Sweden A.B.*
Box 20092
Enighetsvagen 5
S-16120 Bromma
Tel: (08) 98 53 85
TELEX: 12261

SWITZERLAND

Intel Semiconductor A.G.
Forchstrasse 95
CH 8032 Zurich
Tel: (01) 55 45 02
TELEX: 557 89 ich ch

UNITED KINGDOM

Intel Corporation (U.K.) Ltd.*
5 Hospital Street
Nantwich, Cheshire CW5 5RE
Tel: (0270) 626 560
TELEX: 36620

Intel Corporation (U.K.) Ltd.
Dorcan House
Eldene Drive
Swindon, Wiltshire SN3 310
Tel: (0793) 26 101
TELEX: 444447 INT SWN

*Field Application Location